General Disclaimer

One or more of the Following Statements may affect this Document

- This document has been reproduced from the best copy furnished by the organizational source. It is being released in the interest of making available as much information as possible.

- This document may contain data, which exceeds the sheet parameters. It was furnished in this condition by the organizational source and is the best copy available.

- This document may contain tone-on-tone or color graphs, charts and/or pictures, which have been reproduced in black and white.

- This document is paginated as submitted by the original source.

- Portions of this document are not fully legible due to the historical nature of some of the material. However, it is the best reproduction available from the original submission.

Produced by the NASA Center for Aerospace Information (CASI)

NATIONAL AERONAUTICS AND SPACE ADMINISTRATION

NASA CR-
141846

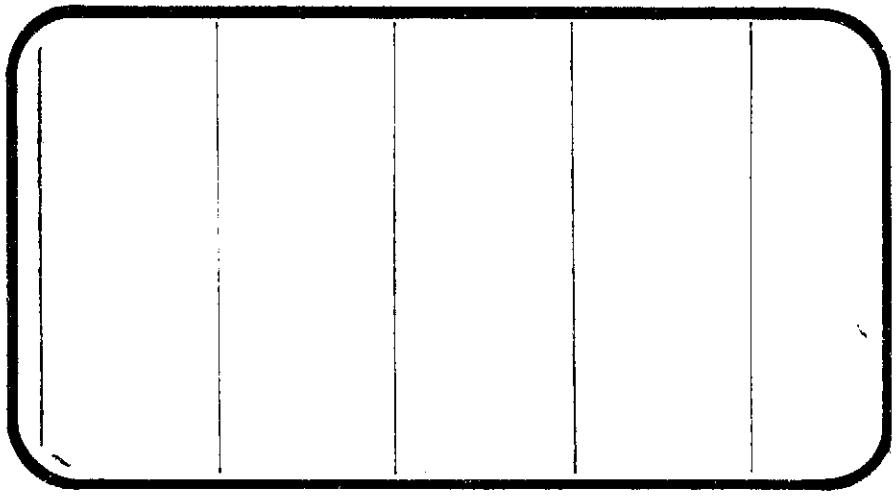

(NASA-CR-141846) AERODYNAMIC RESULTS OF A SEPARATION TEST (CA20) CONDUCTED AT THE BOEING TRANSONIC WIND TUNNEL USING (.038-SCALE MODELS OF THE CONFIGURATION 140A/B (MODIFIED) SSV ORBITER (MODEL NO.

N76-16035
HC $32.75
Unclas
G3/02 08756

SPACE SHUTTLE

AEROTHERMODYNAMIC DATA REPORT

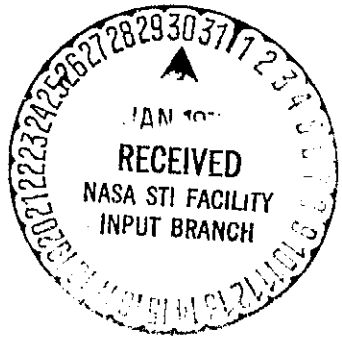

JOHNSON SPACE CENTER

HOUSTON, TEXAS

DATA MANagement services

SPACE DIVISION CHRYSLER CORPORATION

December, 1975

DMS-DR-2217
NASA CR-141,846

VOLUME 3 of 3

AERODYNAMIC RESULTS OF A SEPARATION TEST (CA20) CONDUCTED AT THE BOEING TRANSONIC WIND TUNNEL USING 0.030-SCALE MODELS OF THE CONFIGURATION 140A/B (MODIFIED) SSV ORBITER (MODEL NO. 45-0) AND THE BOEING 747 CARRIER (MODEL NO. AX 1319 I-1)

by

T. Dziubala, V. Esparza, R. L. Gillins and M. Petrozzi
Shuttle Aero Sciences
Rockwell International Space Division

Prepared under NASA Contract Number NAS9-13247

by

Data Management Services
Chrysler Corporation Space Division
New Orleans, La. 70189

for

Engineering Analysis Division

Johnson Space Center
National Aeronautics and Space Administration
Houston, Texas

WIND TUNNEL TEST SPECIFICS:

Test Number:	BTWT 1431/AX 1319 I-1
NASA Series Number:	CA20
Model Number:	45-0 Mod/747 Carrier AX 1319 I-1
Test Dates:	9 through 16 October 1974
Occupancy Hours:	115

FACILITY COORDINATOR

B. Sendek
The Boeing Company
Orgn. B-8342 MS1W-82
Seattle, Washington 98007

Phone: (206) 655-3037

AERODYNAMICS ANALYSIS ENGINEERS:

W. L. Osborn and J. F. Kerswell
Rockwell International
Mail Code AC07
12214 Lakewood Blvd.
Downey, California 90241

Phone: (213) 922-5049

PROJECT ENGINEERS:

T. Dziubala, V. Esparza
R. L. Gillins, M. Petrozzi
Rockwell International
Space Division
12214 Lakewood Blvd.
Mail Code AC07
Downey, California 90241

Phone: (213) 922-4898

C. R. Mullen
Boeing Aerospace Company
M. S. OT-55
P. O. Box 3999
Seattle, Washington 98124

Phone: (206) 342-1220

DATA MANAGEMENT SERVICES:

Prepared by: Liaison--D. A. Sarver
Operations--R. H. Lindahl

Reviewed by: D. E. Poucher

Approved: Donald E. Poucher for J. L. Glynn, Manager
Data Operations

Concurrence: N. D. Kemp, Manager
Data Management Services

Chrysler Corporation Space Division assumes no responsibility for the data presented other than display characteristics.

AERODYNAMIC RESULTS OF A SEPARATION TEST (CA20) CONDUCTED AT THE BOEING TRANSONIC WIND TUNNEL USING 0.030-SCALE MODELS OF THE CONFIGURATION 140A/B (MODIFIED) SSV ORBITER (MODEL NO. 45-0) AND THE BOEING 747 CARRIER (MODEL NO. AX 1319 I-1)

by

T. Dziubala, V. Esparza, R. L. Gillins and M. Petrozzi
Rockwell International Space Division

ABSTRACT

An experimental aerodynamic investigation (CA20) was conducted in the Boeing Transonic Wind Tunnel from October 9 through October 16, 1974. A Rockwell built 0.030-scale 45-0 modified SSV Orbiter Configuration 140A/B model and a Boeing built 0.030-scale 747 carrier model were tested to provide six component force and moment data for each vehicle in proximity to the other at a matrix of relative positions, attitudes and test conditions. Orbiter model support system tare effects were determined for corrections to obtain support-free aerodynamics.

In addition to the balance force data, pressures were measured. Pressure orifices were located at the base of the Orbiter, on either side of the vertical blade strut, and at the mid-root chord on either side of the vertical tail. Strain gages were installed on the Boeing 747 vertical tail to indicate buffet onset.

The 747 carrier was varied through angles of attack (measured with respect to its FRL) of 0°, 2°,4°,6°,8°, and 10° and varied through sideslip

angles of 0°, +5°, and -5°. Elevator settings were also varied.

The SSV Orbiter model was varied through angles of attack of 6°, 8°, 10°, 12°, 14°, 16°, and 18° and varied through sideslip angles of 2.5°, 0°, -2.5°, -5°, -7.5°, -10°, and -15°.

Vertical displacements of 0", 1", 2", 3", 5", 7", 9", 11", 13", 15", 18", and 21.6" (model scale) were tested. Longitudinal movements of 0", 3.6", and 7.2" (model scale) and lateral displacements of 0" and 3.6" (model scale) were tested to simulate various separation positions. Orbiter elevon deflections were also varied.

Orbiter support system tare and interference effects were determined utilizing various support and image support strut configurations. Carrier support system tare and interference effects were determined during test CA5.

The Orbiter tail cone and carrier models were provided by The Boeing Company. The Orbiter model was provided by Rockwell. These were the same models used earlier in test CA5.

This report for CA20 consists of three volumes: Volume 1 - data figures 1 through 25; Volume 2 - data figures 26 through 39; Volume 3 - tabulated source data.

TABLE OF CONTENTS

	Page
ABSTRACT	iii
INDEX OF MODEL FIGURES	2
INDEX OF DATA FIGURES	4
NOMENCLATURE	9
REMARKS	15
CONFIGURATIONS INVESTIGATED	16
TEST FACILITY DESCRIPTION	20
DATA REDUCTION	21
REFERENCES	22
TABLES	
I. TEST CONDITIONS	25
II. DATA SET/RUN NUMBER COLLATION SUMMARY	26
III. MODEL DIMENSIONAL DATA	
A. CARRIER	38
B. ORBITER	51
IV. CA20 DATASET DESCRIPTION (RAW DATA)	62
V. CA20 COEFFICIENT SCHEDULE (RAW DATA)	63
VI. CA20 DATASET DESCRIPTION (INTERPOLATED/INCREMENTED DATASETS)	64
VII. CA20 INTERPOLATED DATASET SUMMARY (M AND N DATASETS)	65
VIII. CA20 INCREMENTAL DATASET SUMMARY (INTERFERENCE) - (ISOLATED) (U AND V DATASETS)	67
IX. SPECIAL INTERPOLATION FOR CONFIGURATIONS WITH ATTACH HARDWARE	68

TABLE OF CONTENTS (Concluded)

	Page
TABLES (Continued)	
X. SPECIAL INTERPOLATED INCREMENTS FOR CONFIGURATIONS WITH ATTACH HARDWARE	69
XI. CARRIER SUPPORT STRUT TARE AND INTERFERENCE CORRECTION PROCEDURE	70
FIGURES	
MODEL	71
DATA	
(VOLUME 1 - FIGURES 1-25)	85
(VOLUME 2 - FIGURES 26-39)	85
APPENDIX	
TABULATED SOURCE DATA (VOLUME 3)	85

INDEX OF MODEL FIGURES

Figure		Title	Page
1.		Axis systems.	
	a.	General	71
	b.	Orbiter/747 Axis System Definition	72
2.		Model sketches.	
	a.	SSV Orbiter Configuration (VC70-000002)	73
	b.	Orbiter/747 Flight Test Configurations	74
	c.	Base Pressure Locations	75
	d.	Blade Strut and Vertical Tail Pressure Locations	76
	e.	Standard In-Flight Speed-Brake	77
	f.	Test Support Configurations	78
	g.	Orbiter/747 C.G. and C.R. Orientation	79
3.		Model photographs.	
	a.	Orbiter Alone with Dummy Blade in Proximity for Sting Tare Effect Study	80
	b.	Orbiter Alone with Tail Cone $TC_{5.1}$	81
	c.	Aft View of the Orbiter/747 Showing Vertical Displacement	82
	d.	Front View of the Orbiter at an Angle Of Attack with Respect to the 747 Carrier	83

INDEX OF DATA FIGURES

FIGURE NUMBER	TITLE	SCHEDULE OF PLOTTED COEFFICIENTS	CONDITIONS VARYING	PAGES
VOLUME 1				
4	EFFECT OF ORBITER SUPPORT STRUT MOUNTING SYSTEM ON 01	A	CONFIG, MACH	1-10
5	EFFECT OF ORBITER SUPPORT STRUT MOUNTING SYSTEM ON 02	A	CONFIG, MACH	11-20
6	ORBITER ALONE ELEVON AND AILERON EFFECTS - 01	A	MACH, ELEVON, AILRON	21-30
7	ORBITER ALONE ELEVON AND AILERON EFFECTS - 02	A	ELEVON, AILRON	31-35
8	ORBITER ALONE DELTA Z VARIATIONS (TUNNEL ANOMALIES)	B	ALPHAO	36-39
9	ORBITER ALONE SIDESLIP EFFECTS - 01 (BETA SWEEP)	C		40-40
10	ORBITER ALONE SIDESLIP EFFECTS - 01 (ALPHA SWEEP)	D	MACH, BETAO	41-42
11	ORBITER ALONE SIDESLIP EFFECTS - 02 (ALPHA SWEEP)	D	BETAO	43-43
12	ORBITER ALONE SIDESLIP EFFECTS - 05 (ALPHA SWEEP)	D	BETAO	44-44
13	ORBITER ALONE CONFIGURATION EFFECTS	A	CONFIG, MACH	45-54
14	ORBITER ALONE RUDDER EFFECTS	A	CONFIG, MACH, BETAO, RUDDER	55-64
15	CARRIER ALONE BASIC AERODYNAMIC CHARACTERISTICS	E	BETAC	65-68
16	CARRIER SIDESLIP EFFECTS IN PRESENCE OF ORBITER (BETA SWEEP)	F	DY	69-70

INDEX OF DATA FIGURES (Continued)

FIGURE NUMBER	TITLE	SCHEDULE OF PLOTTED COEFFICIENTS	CONDITIONS VARYING	PAGES
17	ORBITER SIDESLIP EFFECTS IN PRESENCE OF CARRIER	F	DY	71-72
18	ORBITER ANGLE OF ATTACK EFFECTS ON CARRIER IN PRESENCE OF ORBITER	G		73-76
19	ORBITER ANGLE OF ATTACK EFFECTS ON ORBITER IN PRESENCE OF CARRIER	A		77-81
20A	EFFECTS OF ATTACH HARDWARE ON CARRIER IN PRESENCE OF ORBITER	H	CONFIG, ALPHAO	82-99
20B	SIDESLIP EFFECTS ON CARRIER IN PRESENCE OF ORBITER WITH ATTACH HARDWARE	I	CONFIG, ALPHAO, BETA	100-105
20C	SPOILER EFFECTS ON CARRIER IN PRESENCE OF ORBITER WITH ATTACH HARDWARE	J	CONFIG, ALPHAW, BETA	106-155
21A	EFFECTS OF ATTACH HARDWARE ON ORBITER IN PRESENCE OF CARRIER	H	CONFIG, ALPHAO	156-173
21B	SIDESLIP EFFECTS ON ORBITER IN PRESENCE OF CARRIER WITH ATTACH HARDWARE	I	CONFIG, ALPHAO, BETAO	174-179
21C	SPOILER EFFECTS ON ORBITER IN PRESENCE OF CARRIER WITH ATTACH HARDWARE	J	CONFIG, ALPHAO, BETAO	180-229
22	COMPARISON BETWEEN INTERPOLATED (MGN--- DATASETS) AND RAW CARRIER DATA	K	ALPHAO, ALPHAC, DY, PHI	230-253
23	COMPARISON BETWEEN INTERPOLATED (NGN- -- DATASETS) AND RAW ORBITER DATA	K	ALPHAO, ALPHAC, DY, PHI,	254-283

INDEX OF DATA FIGURES (Continued)

FIGURE NUMBER	TITLE	SCHEDULE OF PLOTTED COEFFICIENTS	CONDITIONS VARYING	PAGES
24	VARIATION OF CARRIER CHARACTERISTICS WITH DELTA Z (01 AT PHI = 0)	L	CONFIG, ALPHAO, ALPHAC, BETAC, BETAO, DX, DY	284-623
25	VARIATION OF CARRIER CHARACTERISTICS WITH DELTA Z (01 AT PHI = 7.5)	L	CONFIG, ALPHAC, BETAO, BETAC, ALPHAO, DX, DY	624-831
VOLUME 2				
26	VARIATION OF ORBITER CHARACTERISTICS WITH DELTA Z (01 AT PHI = 0)	M	CONFIG, ALPHAC, ALPHAO, BETAC, BETAO, DX, DY	832-1132
27	VARIATION OF ORBITER CHARACTERISTICS WITH DELTA Z (01 AT PHI = 7.5)	M	CONFIG, ALPHAC, ALPHAO, BETAC, BETAO, DX, DY	1133-1314
28	VARIATION OF CARRIER CHARACTERISTICS WITH DELTA Z (02 AT PHI = 0)	L	CONFIG, ALPHAC, ALPHAO, BETAC, DX, DY	1315-1434
29	VARIATION OF ORBITER CHARACTERISTICS WITH DELTA Z (02 AT PHI = 0)	M	CONFIG, ALPHAC, ALPHAO, BETAC, DX, DY	1435-1539
30	VARIATION OF CARRIER CHARACTERISTICS WITH DELTA Z (ELEVATOR = 0)	P	ALPHAO, ALPHAC, BETAC	1540-1563
31	VARIATION OF ORBITER CHARACTERISTICS WITH DELTA Z (ELEVATOR = 0)	M	ALPHAO, ALPHAC, BETAC	1564-1605

INDEX OF DATA FIGURES (Continued)

FIGURE NUMBER	TITLE	SCHEDULE OF PLOTTED COEFFICIENTS	CONDITIONS VARYING	PAGES
32	ELEVATOR EFFECTS ON CARRIER SEPARATION CHARACTERISTICS (DELTA Y = 0)	P	ALPHAO, ELV-IB, ELV-OB	1606-1617
33	ELEVATOR EFFECTS ON ORBITER SEPARATION CHARACTERISTICS (DELTA Y = 0)	B	ALPHAO, ELV-IB, ELV-OB	1618-1629
34	RUDDER EFFECTS ON CARRIER SEPARATION CHARACTERISTICS (DELTA Y = 0)	L	CONFIG, ALPHAO, RUDDER	1630-1653
35	RUDDER EFFECTS ON ORBITER SEPARATION CHARACTERISTICS (DELTA Y = 0)	M	CONFIG, ALPHAO, RUDDER	1654-1674
36	ELEVON EFFECTS ON CARRIER SEPARATION CHARACTERISTICS (DELTA Y = 0)	L	ALPHAO, ELEVON, AILRON	1675-1698
37	ELEVON EFFECTS ON ORBITER SEPARATION CHARACTERISTICS (DELTA Y = 0)	M	CONFIG, ALPHAO ELEVON, AILRON	1699-1719
38	DELTA Z AND ALPHAO BIVARIANT EFFECTS ON CARRIER (PHI, BETAO, BETAC = 0)	N	ALPHAC, DX	1720-1791
39	DELTA Z AND ALPHAO BIVARIANT EFFECTS ON ORBITER (PHI, BETAO, BETAC = 0)	O	ALPHAC, DX	1792-1863

SCHEDULE OF PLOTTED COEFFICIENTS:

(A) CN versus ALPHAO; CN versus CLM; CA, CLM, CL versus ALPHAO; CL versus CD; CD, CY, CYN, CBL versus ALPHAO

(B) CN, CLM, CA, CL, CD, CY, CYN, CBL versus DZ

(C) CY, CYN, CBL versus BETAO

(D) CY, CYN, CBL versus ALPHAO

(E) CL versus ALPHAW; CL versus CD; CL versus CLM; CLM, CY, CYN, CBL, CLN, CSL versus ALPHAW

(F) CY, CYN, CBL, CLN, CSL versus BETA

(G) CL, CD, CN, CLM, CY, CYN, CBL, CLN, CSL versus ALPHAO

(H) CL, CD, CLM, CN, CA, DCL, DCD, DCLM, DCN, DCA versus DZ

(I) CY, CYN, CBL, CLN, CSL, DCY, DCYN, DCBL, DCLN, DCSL versus DZ

(J) CL, CD, CLM, CN, CA, CY, CYN, CBL, CLN, CSL, DCL, DCD, DCLM, DCN, DCA, DCY, DCYN, DCBL, DCLN, DCSL versus DZ

(K) CL, CD, CLM, CY, CLN, CSL versus DZ

(L) CL, CD, CLM, CY, CYN, CBL, CLN, CSL, DCL, DCD, DCLM, DCY, DCYN, DCBL, DCLN, DCSL versus DZ

(M) CN, CLM, CA, CL, CD, CY, CYN, CBL, DCN, DCLM, DCA, DCL, DCD versus DZ

(N) DCL, DCLM, DCD, DCY, DCLN, DCSL, DCYN, DCBL versus DZ

(O) DCN, DCLM, DCA, DCY, DCYN, DCBL, DCL, DCD versus DZ

(P) CL, CD, CLM, CY, CYN, CBL, CLN, CSL versus DZ

NOMENCLATURE

Symbol	Plot Symbol	Description
b	BREF	reference span, in
BSTA	XC	longitudinal carrier station, in
BWL	ZC	vertical carrier station, in
$\bar{c}$	LREF	mean aerodynamic chord, in
C_A	CA	axial force coefficient
C_D	CD	drag coefficient
C_{ℓ_B}	CBL	body axis rolling moment coefficient
C_{ℓ_S}	CSL	stability axis rolling moment coefficient
C_L	CL	lift coefficient
C_m	CLM	pitching moment coefficient
C_{n_B}	CYN	body axis yawing moment coefficient
C_{n_S}	CLN	stability axis yawing moment coefficient
C_N	CN	normal force coefficient
$C_{P_{B_1}}$	PB1	Orbiter base pressure coefficient for orifice no. 1, see Figure 2c
$C_{P_{B_2}}$	PB2	Orbiter base pressure coefficient for orifice no. 2, see Figure 2c
$C_{P_{B_4}}$	PB4	Orbiter base pressure coefficient for orifice no. 4, see Figure 2c
$C_{P_{CAV}}$	PCAV	Orbiter cavity pressure coefficient

NOMENCLATURE (Continued)

Symbol	Plot Symbol	Definition
$C_{P_{E_{B_1}}}$	LHLS	coefficient of pressure measured on fuselage at left side of vertical tail
$C_{P_{E_{B_2}}}$	RHLS	coefficient of pressure measured on fuselage at right side of vertical tail
$C_{P_{SC}}$	PSC	carrier cavity pressure coefficient
$C_{P_{S_1}}$	LHVERT	coefficient of pressure measured on left side of Orbiter strut
$C_{P_{S_2}}$	RHVERT	coefficient of pressure measured on right side of Orbiter strut
C_Y	CY	side force coefficient
C.G.		center of gravity
C.R.		center of rotation
FRL		fuselage reference line
α_o	IORB	Orbiter incidence relative to carrier FRL, deg.
L_B	LREF	reference body length, in
MACH	MACH	Mach number
M.R.C.	XMRP,YMRP ZMRP	moment reference center, in
MS		model station, in
P_{Bi}		base pressure measured at station i, i=1,2,4, psia
P_{EB_i}		pressure measured on Orbiter fuselage surface on left side vertical tail/fuselage juncture, psia

NOMENCLATURE (Continued)

Symbol	Plot Symbol	Definition
P_{EB_2}		pressure measured on Orbiter fuselage surface on right side vertical tail/fuselage juncture, psia
P_{S_1}		pressure measured on left side of Orbiter strut S_1, psia
P_{S_2}		pressure measured on right side of Orbiter strut S_1, psia
q	Q(PSF)	freestream dynamic pressure, psf
RN/ET	RN/L	freestream unit Reynolds no., 10^6 per foot
$\bar{V}$		mean freestream velocity, ft/sec
S	SREF	wing area or reference area, ft^2
WL	Z	water line, in
X		longitudinal Orbiter separation distance, measured from nominal mated position, ft
X_c	XC	carrier longitudinal station, in
X_{MRP}	XMRP	longitudinal location of MRC, in
X_o	XO	Orbiter longitudinal station, in
Y		Orbiter lateral separation distance, measured from nominal mated position, ft
Y_C	YC	carrier lateral station, in
Y_{MRP}	YMRP	lateral location of MRC, in
Y_o	YO	Orbiter lateral station, in
Z		Orbiter vertical separation distance, measured from nominal mated position, ft
Z_C	ZC	carrier vertical station, in

NOMENCLATURE (Continued)

Symbol	Plot Symbol	Definition
Z_{MRP}	ZMRP	vertical location of MRC, in
Z_O	ZO	Orbiter vertical station, in
$1/(\Delta Z+10)$	1/Z+10	separation parameter, inverse of vertical separation distance plus 10 ft, per foot
α	ALPHA	angle of attack, deg.
α_C	ALPHAC	carrier fuselage angle of attack, α_W-2°, deg.
α_O	ALPHAO	Orbiter angle of attack, deg.
α_W	ALPHAW	carrier wing angle of attack, α_C+ 2°, deg.
α_{Wall}	ALPWAL	wind tunnel wall correction to carrier angle of attack, deg.
β	BETA	angle of sideslip, deg.
β_C	BETAC	carrier sideslip angle, deg.
β_O	BETAO	Orbiter sideslip angle, deg.
δ_a	AILRON	aileron deflection angle, deg.
δ_e	ELEVON	Orbiter elevon deflection angle, deg.
δe_I	ELV-IB	inboard carrier elevator panel deflection angle, deg.
δe_ϕ	ELV-OB	outboard carrier elevator panel deflection angle, deg.
δe_V	ELEVTR	carrier elevator deflection angle, deg.
δ_r	RUDDER	carrier rudder deflection angle, deg.
δr_L	RUD-L	carrier lower rudder panel deflection angle, deg.

NOMENCLATURE (Continued)

Symbol	Plot Symbol	Definition
δ_{r_u}	RUD-U	carrier upper rudder panel deflection angle, deg.
δ_S		spoiler deflection angle, deg.
ΔC_A	DCA	incremental axial force coefficient
ΔC_D	DCD	incremental drag coefficient
ΔC_{ℓ_B}	DCBL	incremental body axis rolling moment coefficient
ΔC_{ℓ_S}	DCSL	incremental stability axis rolling moment coefficient
ΔC_L	DCL	incremental lift coefficient
ΔC_m	DCLM	incremental pitching moment coefficient
ΔC_{n_B}	DCYN	incremental body axis yawing moment coefficient
ΔC_{n_S}	DCLN	incremental stability axis yawing moment coefficient
ΔC_N	DCN	incremental normal force coefficient
ΔC_Y	DCY	incremental side force coefficient
ΔX	DX	Orbiter longitudinal separation distance from nominal mated position, ft
ΔY	DY	Orbiter lateral separation distance from nominal mated position, ft
ΔZ	DZ	Orbiter vertical separation distance from nominal mated position, ft
$\Delta\alpha$	DALFA	incremental angle of attack between Orbiter and carrier FRL, $\alpha_o - \alpha_c$, deg.

NOMENCLATURE (Concluded)

Symbol	Plot Symbol	Definition
$\Delta\beta$	DBETA	incremental angle of sideslip between Orbiter and carrier, $\beta_O - \beta_C$, deg.
$\Delta\phi$	DPHI	incremental roll angle between Orbiter and carrier, deg.
ϕ	PHI	Orbiter roll angle, deg.
C_{L_C}	CL-C	carrier lift coefficient with test mounting system corrections
C_{D_C}	CD-C	carrier drag coefficient with test mounting system corrections
C_{m_C}	CLM-C	carrier pitching moment coefficient with test mounting system corrections
C_{Y_C}	CY-C	carrier side force coefficient with test mounting system corrections
$C_{n_{BC}}$	CYN-C	carrier body yaw moment coefficient with test mounting system corrections
$C_{n_{SC}}$	CLN-C	carrier stability yaw moment coefficient with test mounting system corrections
$C_{\ell_{SC}}$	CSL-C	carrier stability roll moment coefficient with test mounting system corrections
$C_{\ell_{BC}}$	CBL-C	carrier body roll moment coefficient with test mounting system corrections
C_{A_C}	CA-C	carrier axial force coefficient with test mounting system corrections
C_{N_C}	CN-C	carrier normal force coefficient with test mounting system corrections

REMARKS

The Orbiter axial force, measured during this test, exhibits the following trend:

1) at low angles of attack, axial force decreases with increasing angle of attack, as would normally be expected,

2) at high angles of attack, axial force increases with increasing angle of attack, contrary to normal expectations.

Extensive investigations and analysis, conducted during the test, indicated that trend number (2) was not caused by model fouling or other test problems and was, indeed, representative of aerodynamic characteristics.

Vertical tail pressure instrumentation (P_{EB_1} and P_{EB_2}) was disconnected during runs 588 through 599.

Configuration D (as described in figure 2f) was not at $\phi = 90°$, as planned, because of support system deflections (caused by the Orbiter model touching strut S_3).

CONFIGURATIONS INVESTIGATED

The Orbiter model was an 0.030-scale representation of the Space Shuttle Orbiter VL70-000140A/B lines with modified OMS pods and elevons as shown in figure 2a. The basic Orbiter is a blended wing-body design with a double delta wing (75° and 45° leading edge sweeps). The Orbiter model was tested both with and without a tail cone fairing. The tail cone fairing covered the MPS nozzles, OMS nozzles, and base,as shown in Figure 3b. The Orbiter model was mounted in the tunnel using several blade strut configurations as follows:

S_1 = Orbiter support blade strut, upper entry position,

S_2 = Orbiter support blade strut, lower entry position,

S_3 = Orbiter dummy support blade strut.

Figure 2f shows the strut arrangements. Orbiter elevon and aileron deflection angles were varied. The Orbiter was tested both isolated and in the presence of the carrier at various separation locations. The following Orbiter configurations were tested:

$O_1 = B_{26}\ C_9\ E_{43}\ F_8\ M_{16}\ W_{116}\ TC_{5.1}$

$O_2 = B_{26}\ C_9\ E_{43}\ F_8\ M_{16}\ N_{28}\ N_{24}\ W_{116}$ (with strut S_1)

$O_3 = B_{26}\ C_9\ E_{43}\ F_8\ M_{16}\ R_5\ V_8\ W_{116}\ TC_{5.1}$

$O_4 = B_{26}\ C_9\ E_{43}\ F_8\ M_{16}\ W_{116}\ TC_{5.1}$

$O_5 = B_{26}\ C_9\ E_{43}\ F_8\ M_{16}\ N_{28}\ N_{24}\ R_5\ V_8\ W_{116}$

$O_6 = B_{26}\ C_9\ E_{43}\ F_8\ M_{16}\ N_{28}\ N_{24}\ R_5\ V_8\ W_{116}$ MPS cover plate off

$O_7 = B_{26}\ C_9\ E_{43}\ F_8\ M_{16}\ N_{28}\ R_5\ V_8\ W_{116}$ strut, S_2 cover plate #1 off MPS base plate off

$O_8 = B_{26}\ C_9\ E_{43}\ F_8\ M_{16}\ N_{28}\ R_5\ V_8\ W_{116}$ strut, S_2 cover plate #2 off MPS base plate off

$O_9 = B_{26}\ C_9\ E_{43}\ F_8\ M_{16}\ N_{28}\ N_{24}\ \ W_{116}$ (with strut S_2)

where:

Component	Description
B_{26}	Orbiter fuselage per Rockwell lines VL70-000140A/B, model drawing SS-A01360
C_9	Orbiter canopy per Rockwell lines VL70-000140A/B, model drawing SS-A01360
E_{43}	Orbiter full-span, unswept hingeline, 6" gapped elevons per Rockwell lines VL70-000200, model drawing SS-A01360
F_8	Orbiter body flap per Rockwell lines VL70-000200, model drawing SS-A01360
M_{16}	Orbiter OMS/RCS pods per Rockwell lines VL70-000203A, VL70-008401, model drawing SS-A01360
N_{24}	Orbiter main propulsion system (MPS) nozzles - VL70-000140A, VL70-005030A, model drawing SS-A01360
N_{28}	Orbiter OMS nozzles - VL70-000140A model drawing SS-A01360
R_5	Orbiter rudder per Rockwell lines VL70-000146A, model drawing SS-A01360
$TC_{5.1}$	Orbiter tail cone fairing which covers the MPS nozzles and the OMS nozzles and base, built by the Boeing Company, also used in CA5
V_8	Orbiter centerline vertical tail per Rockwell lines VL70-000146A, model drawing SS-A01360
W_{116}	Orbiter double delta wing per Rockwell lines VL70-000200, model drawing SS-A01360

Effects of simulated attach hardware were investigated using the following model components attached to the carrier.

AT_{38}	Forward attach structure between the Orbiter and carrier model used for i_o of 3 to 10 degrees for ΔZ = 0 feet
AT_{39}	Aft attach structure between the Orbiter and carrier model for ΔZ = 0 feet

The carrier model was an 0.030-scale representation of the Boeing 737-100 aircraft with surface contours built to represent the 747 under loads it would experience with a 600,000 pound gross weight flying at Mach 0.86 at an altitude of 35,000 feet. The model also had a built in 0.64° leading edge up wing tip twist to compensate for model aeroelastic effects, which are estimated to produce a 0.64° leading edge down twist. The carrier had 200 square foot tip fins on its horizontal tail. Spoilers were deflected to 45° and flaps were retracted during most of the test. Several runs were made with spoilers retracted. Elevator and rudder deflections were varied during the test. The carrier was tested both isolated and in the presense of the Orbiter at various separation conditions. Carrier configurations investigated were:

$$747/0 = B_{27.8}\ F_o\ H_{15.6}\ M_{26}^{25}\ N_{58}^{57}\qquad T_{19}\ V_{9.1}\ W_{44.1}$$

$$747/1 = B_{27.8}\ F_o\ H_{15.6}\ M_{26}^{25}\ N_{58}^{57}\ S_{1\text{-}12}\ T_{19}\ V_{9.1}\ W_{44.1},\ \delta_S = 45°$$

where:

Component	Description
$B_{27.8}$	fuselage
F_o	all flaps retracted

CONFIGURATIONS INVESTIGATED (Concluded)

$H_{15.6}$	horizontal tail (H_{15}) with 200 ft^2 tip fins
M_{26}^{25}	inboard (M_{25}) and outboard (M_{26}) nacelle struts
N_{58}^{57}	inboard (N_{57}) and outboard (N_{58}) nacelles
S_{1-12}	12 spoiler panels located on wing upper surface, all deflected 45°
T_{19}	flap track fairing
$V_{9.1}$	vertical tail
$W_{44.1}$	wing

Orbiter base pressures were measured, for configurations without tail cone, at locations as shown by figure 2c. Pressures were measured on both sides of Orbiter support strut when S_1 was used and pressures were measured on the fuselage near the vertical tail when the vertical tail was installed as shown by figure 2d. Pressures were measured in the Orbiter and carrier balance cavity.

TEST FACILITY DESCRIPTION

The Boeing Transonic Wind Tunnel (BTWT) is a continuous flow, closed circuit, single return, atmospheric facility with the following characteristics:

Test Section Flow Parameters		Test Section Dimensions	
Freestream Condition	Range	Description	Value
Mach number	0 thru 1.15	Cross-section (minus	
Dynamic pressure, psia	0 thru 6.3	corner fillets), ft.	8 x 10
Static pressure, psia	15 to 5.4	Length, ft.	14.5
Stagnation pressure	atmospheric	Area, $ft.^2$	88
Maximum unit Reynolds number, per foot	4×10^6		
Maximum total temperature, °F	160		

The test section can be operated with either solid or slotted walls. The slotted wall configuration consists of 16 slots which can vary wall porosity from 8.5% to 11%.

Test data acquistion, recording, computations, and display are done by an XDS-9300 computer and Astro data sub-system.

DATA REDUCTION

Force and moment data were reduced in both body and stability axes using standard Boeing data reduction procedures. The following data reduction constants were used:

		Carrier		Orbiter	
Symbol	Description	Model Scale	Full Scale	Model Scale	Full Scale
S	reference area, ft.^{2}	4.950	5500	2.421	2690.0
b	reference span, in	70.441	2348.04	28.100	936.68
$\bar{c}$	reference mac, in	9.833	327.78	14.244	474.81
MRC	moment reference center, in				
	XC or XO	40.197	1339.90	33.270	1109.0
	YC or YO	0.0	0.0	0.0	0.0
	ZC or ZO	5.723	190.80	11.250	375.0

No base or cavity corrections were applied to the data.

Wind tunnel data were interpolated versus the applicable separation parameters (α_O, ΔZ, ΔX, α_W, ΔY, β_O, β_C, and ϕ) as summarized by Table VII. These interpolated data were used to compute interference increments by subtracting isolated data from interference data as summarized by Table VIII. A special interpolation routine was used for datasets with simulated attach hardware as summarized by Tables IX and X. Interpolated carrier data were corrected for support strut tare and interference using corrections obtained during test CA5 as summarized by Table XI. Basic data, interpolated data, incremental data, and carrier data with tare and interference corrections, are presented in this report. Tables IV through VI describe data presentation formats.

REFERENCES

Reports and Internal Letters

Speed Letter, SAS/WTO/74-365, "Fabrication of a new 0.03-scale Orbiter Model," dated July 3, 1974

IL, SAS/WTO/74-173, Addendum #1, "Updated Model Design Requirements for Model 45-0", dated July 24, 1974

IL, SAS/WTO/74-173, Addendum #2, "Additional Requirements for Model 45-0," dated July 24, 1974

IL, SAS/AERO/74-493, "Piggyback Separation Tests - Orbiter Support Configurations and Corrections," dated August 9, 1974

IL, SAS/AERO/74-552, "Orbiter Model Support and Instrumentation Requirements"

IL, SAS/AERO/74-617, "Test Requirements for Separation Test CA20," dated August 20, 1974

NA-74-541, "Structural Analysis of the 0.03-scale SSV model 45-0", dated July 23, 1974

DMS-DR-2211, "Results of a 0.03-scale Aerodynamic Characteristics Investigation of a Boeing 747 Carrier (Model AX 1319 I-D) Mated with a Space Shuttle Orbiter (Model 45-0) conducted in the Boeing Transonic Wind Tunnel (CA5)", by 747 Aerodynamics, 747 Flight Controls, and Wind Tunnel Test Group, Boeing Aerospace Company

Drawings

Rockwell International - SSV Orbiter

SS-A01360 - Model Assy., 45-0, 0.03 Sc. SSV Orbiter (140A/B) Revision B, dated August 1, 1974

SS-A01361- Model Instl. 45-0, 0.03 Sc. SSV Ferry Separation, Release 1, dated August 12, 1974

SS-A01362 - Blade Strut Assy., 0.03 Sc. 45-0 SSV Model, dated July 29, 1974

The Boeing Company - 747 Carrier

65-69716 - Model Assy., TE 1007 I-1, dated August 23, 1973

65-89585 - Wing W44.1 AX 1319 I-1, dated August 1, 1974

REFERENCES (Continued)

747-MD-572 - Structural Arrangement Forward "A" Frame Support Orbiter - 747 MOD, dated June 25, 1974

747-MD-461 - General Arrangement - 747 Space Shuttle Orbiter Carrier Aircraft (Piggyback Configuration), dated July 15, 1974

747-MD-576 - Structural Arrangement - Orbiter Aft Support, 747 MOD, dated August 1, 1974

1319-6, "Inbd Main Flap," dated 7-26-74

1319-15, "Wing Coves," dated 7-29-74

1319-24, "Outbd Fore-Flap," dated 8-5-74

1319-25, "Outbd Fore-Flap," dated 8-5-74

1319-33, "Inner Body - Orbiter (Bal #660)" dated 8-13-74

1319-34, "Spoiler, dated 8-14-74

1319-35, "Balance Holder - Orbiter (Bal #660)" dated 8-14-74

1319-36, "Rear Mtg. Parts - Orbiter," dated 8-28-74

1319-37, "Aft Support and Balance Adapter Assy. Orbiter," dated 8-28-74

1319-38, "Inbd Flap Assy 20° $F_{8.1}$," dated 8-17-74

1319-39, "Inbd Flap Brkts 20° $F_{8.1}$," dated 8-19-74

1319-40, "Setting Temp - L.E. Flaps," dated 8-17-74

1319-41, "Outbd Flap Brkts 20° $F_{8.2}$," dated 8-20-74

1319-42, "Outbd Flap Assy 20° $F_{8.2}$," dated 8-20-74

1319-43, "Fwd Orbiter Support Parts & Assy," dated 8-21-74

1319-44, "L. E. Kruger & Flap Instl.," dated 8-21-74

1319-45, "BTWT Orbiter Alone Mtg Parts & Assy," dated 8-22-74

1319-47, "Template-Stabilizer Tip Fin," dated 8-22-74

1319-55, "Stabilizer Fins," dated 8-23-74

1319-57, "Stabilizer Fin Brkts," dated 8-24-74

1319-60, "Stabilizer Fin Instl," dated 8-26-74

1319-63, "Orbiter Modif, & Inner Body Instl," dated 8-29-74

1319-64, "Model Support Mat'l," dated 9-3-74

D6-25552, "Model Geometry Estimated Loads and Stress Analysis, Model AX13181-1," dated 9-11-74

TABLE I

TEST : CA20 DATE : 11-20-74

TEST CONDITIONS

MACH NUMBER	REYNOLDS NUMBER (per unit length)	DYNAMIC PRESSURE (pounds/sq. ft.)	STAGNATION TEMPERATURE (degrees Rankine)
0.3	1.93 x 10^6/FT	126	548
0.48	2.81 x 10^6/FT	293	559
0.50	2.94 x 10^6/FT	315	555
0.60	3.30 x 10^6/FT	422	563

BALANCE UTILIZED: Orbiter: BTWT #660F 2.074 inch dia.
Carrier: BTWT External Balance

	CAPACITY		COEFFICIENT TOLERANCE:
	Orbiter	Carrier	
NF	1780 lb.	10,000 lb.	
SF	1335 lb.	5,000 lb.	
AF	301.5 lb.	1,000 lb.	
PM	4266 in.-lb.	100,000 in.-lb.	
RM	2014.5 in.-lb.	25,000 in.-lb.	
YM	2014.5 in.-lb.	25,000 in.-lb.	

COMMENTS:

TABLE II.

TEST: CA20

DATA SET/RUN NUMBER COLLATION SUMMARY

DATE: REV. 1/15/75

DATA SET IDENTIFIER	CONFIGURATION	ORBITER δ_e	δ_a	α_o	β_o	ϕ_o	ΔX	ΔY	ΔZ	MACH NUMBERS .3	.48	.5	.6
RG1001	$O_1 S_2 S_3$	5	0	△3	-5	0	—	—	—	576	577		
02		5	0		0	0				575			
03		5	0		0	0							572
04		5	0		0	0							574
05	$O_2 S_2 S_3$	5	0		-5	0					578		
06		5	0		0	0					580		579
07	$O_1 S_1$	5	0		-5	0				603			604
08		0	0		0	0							614
09		5	-10		0	0							613
10		5	0		0	0				615			616
11		10	0		0	0							612
12		5	0	10	-5	0			△4				605
13		5	0	14	-5	0							606
14		5	0	7.5	△5	-90			—				617
15	$O_2 S_1$	5	0	△3	-5	0							607
16		0	0		0	0							609
17		5	-10		0	0							610
18		5	0		0	0							608

TEST RUN NUMBERS

1 7 13 19 25 31 37 43 49 55 61 67 75 76

SEE TABLE V FOR COEFFICIENT SCHEDULES

IDVAR (1) IDVAR (2) NDV

α OR β SCHEDULES

△1 $\alpha_{FRL} = 0°, 2°, 4°, 6°, 8°, 10°$ $\{\alpha_c = \alpha_{FRL} = \alpha_{w-2°}$ COEFFICENTS

△2 $\beta_c = -10°, -7°, -5°, -3°, -2°, -1°, 0°, 1°, 2°, 3°, 5°, 10°$ CARRIER ANGLES

△3 $\alpha_o = 6°, 8°, 10°, 12°, 14°, 16°, 18°$

△4 $\Delta Z = 0^*, 3, 7.5, 15, 30, 45, 60$ FT.

△5 $\beta_o = 2.5°, 0°, -2.5°, -5°, -7.5°, -10°, -15°$

* MINIMUM SEPARATION DISTANCE

NASA-MSFC-MAF

TABLE II. (Continued)

TEST: CA20 — DATA SET/RUN NUMBER COLLATION SUMMARY — DATE: REV. 1/15/75

DATA SET IDENTIFIER	CONFIGURATION	ORBITER δ_e	δ_a	δ_r	α_o	θ_o	ϕ_o	ΔX	ΔY	ΔZ	MACH NUMBERS .3	.48	.5	.6	TEST RUN NUMBERS
RGN 019	O_2 S_1	10	0	—	⚠	0	0	—	—	—				611	
20	O_3 S_2	5	0	0		−5	0				597			595	
21	↓	5	0	0		0	0				592		593	594	
22		5	0	0		0	0							591	
23		5	0	15		0	0							589	
24	O_5 S_2	5	0	0		−5	0							598	
25		5	0	0		0	0							581	
26	↓	5	0	15		0	0							588	
27	O_6 S_2	5	0	0		0	0							582	
28	O_7 S_2	5	0	0		0	0							583	
29	O_8 S_2	5	0	0		0	0							584	
30		5	0	0		0	0							585	
31		5	0	0		0	0							586	
32	↓	5	0	0		0	0							587	
33	O_9 S_2	5	0	—	↓	−5	0	↓	↓	↓				599	

1 7 13 19 25 31 37 43 49 55 61 67 75 76

COEFFICENTS IDVAR (1) ID VAR (2) IDV

α OR β SCHEDULES

NASA-MSFC-MAF

TABLE II. (Continued)

TEST: CA20 — DATA SET/RUN NUMBER COLLATION SUMMARY — DATE: REV. 1/15/75

DATA SET IDENTIFIER	CONFIGURATION	CARRIER α_c	CARRIER β_c	CARRIER δ_{ev}	CARRIER δ_r	ORBITER δ_e	ORBITER δ_a	ORBITER α_o	ORBITER β_o	ORBITER ϕ_o	ORBITER ΔX	ORBITER ΔY	ORBITER ΔZ	MACH NUMBERS .6	TEST RUN NUMBERS
RGN034	747/1	⚠	-5	0/3	0	—	—	—	—	—	—	—	—	853	
035	↓	↓	0	0/3	0	—	—	—	—	—	—	—	—	852	
036	↓	↓	5	0/3	0	—	—	—	—	—	—	—	—	854	
037	747/1 0,5,	4	0	0/3	0	5	0	⚠	0	0	0	0	7.5	851	
038	↓	4	⚠	0/3	0	5	0	10	0	0	0	0	7.5	850	
039	↓	4	↓	0/3	0	5	0	10	0	0	0	10	7.5	848	

1 7 13 19 25 31 37 43 49 55 61 67 73 76

COEFFICENTS IDVAR (1) IDVAR (2) IDV

α OR β SCHEDULES

NASA-MSFC-MAF

TABLE II. (Continued)

TEST: CA20 — DATA SET/RUN NUMBER COLLATION SUMMARY — DATE: REV. 1/15/75

DATA SET IDENTIFIER	CONFIGURATION	CARRIER α_C	β_C	δ_{ev}	δ_T	ORBITER δ_e	δ_a	MACH	θ_O	ϕ_O	ΔX	ΔY	ΔZ	α_O 8	12	16
RGN040	747/0 $O_1S_1AT_{38}AT_{39}$	0	0	0/3	0	5	0	.6	0	0	0	0		619		
41		4	0	0/3	0	5	0	.6	0	0	0	0			621	
42		8	0	0/3	0	5	0	.6	0	0	0	0				620
43		4	-5	0/3	0	5	0	.6	-5	0	0	0			622	
44	747/0 $O_2S_1AT_{38}AT_{39}$	4	-5	0/3	0	5	0	.6	-5	0	0	0			623	
45	747/1 $O_1S_1AT_{38}AT_{39}$	0	0	0/3	0	5	0	.6	0	0	0	0		627		
46		4	0	0/3	0	5	0	.6	0	0	0	0			625	
47		8	0	0/3	0	5	0	.6	0	0	0	0				626
48		4	-5	0/3	0	5	0	.6	-5	0	0	0			624	

TEST RUN NUMBERS

1 7 13 19 25 31 37 43 49 55 61 67 75 76

COEFFICENTS IDVAR (1) IDVAR (2) NDV

α OR β SCHEDULES

NASA-MSFC-MAF

TABLE II. (Continued)

TEST: CA20 — DATA SET/RUN NUMBER COLLATION SUMMARY — DATE: REV. 1/15/75

DATA SET IDENTIFIER	CONFIGURATION	CARRIER α_c	β_c	δ_{ev}	δ_r	ORBITER δ_e	δ_a	MACH	β_o	ϕ_o	ΔX	ΔY	ΔZ	α_o 6	10	14
RGN049	747/1 0,S1	0	0	0/3	0	5	0	0.6	0	0	0	0	A	631	628	630
50		0	0	0/3	0	5	0	0.6	0	0	10	0		636	637	638
51		0	0	0/3	0	5	0	0.6	0	0	20	0		641	640	639
52		4	0	0/3	0	5	0	0.6	0	0	0	0		632	646	647
53		4	0	0/3	0	5	0	0.6	0	0	10	0		635	694	693
54		4	0	0/3	0	5	0	0.6	0	0	20	0		642	677	676
55		8	0	0/3	0	5	0	0.6	0	0	0	0		633	645	644
56		8	0	0/3	0	5	0	0.6	0	0	10	0		634	691	692
57		8	0	0/3	0	5	0	0.6	0	0	20	0		643	674	675
58		4	0	0/3	0	5	0	0.6	0	0	0	10			775	781
59		4	0	0/3	0	5	0	0.6	0	0	10	10			735	738
60		8	0	0/3	0	5	0	0.6	0	0	0	10			780	787
61		8	0	0/3	0	5	0	0.6	0	0	10	10			736	737
62		4	-5	0/3	0	5	0	0.6	0	0	0	0			649	648
63		4	-5	0/3	0	5	0	0.6	0	0	10	0			687	688
64		4	-5	0/3	0	5	0	0.6	0	0	20	0			670	671
65		8	-5	0/3	0	5	0	0.6	0	0	0	0			650	651
66		8	-5	0/3	0	5	0	0.6	0	0	10	0			690	689

TEST RUN NUMBERS

1 7 13 19 25 31 37 43 49 55 61 67 75 76

COEFFICENTS IDVAR (1) ID.AR (2) *CV

α OR β SCHEDULES

NASA-MSFC-MAF

TABLE II. (Continued)

TEST: CA20 — DATA SET/RUN NUMBER COLLATION SUMMARY — DATE: REV. 1/15/75

DATA SET IDENTIFIER	CONFIGURATION	CARRIER α_c	β_c	δ_{ev}	δ_T	ORBITER δ_e	δ_a	MACH	β_o	ϕ_o	ΔX	ΔY	ΔZ	6	10	14
RGN067	747/1 0,S1	8	-5	0/3	0	5	0	0.6	0	0	20	0	A		673	672
68		4	-5	0/3	0	5	0	0.6	0	0	0	10			776	782
69		4	-5	0/3	0	5	0	0.6	0	0	10	10			739	742
70		8	-5	0/3	0	5	0	0.6	0	0	0	10			779	786
71		8	-5	0/3	0	5	0	0.6	0	0	10	10			740	741
72		4	5	0/3	0	5	0	0.6	0	0	0	10			777	783
73		4	5	0/3	0	5	0	0.6	0	0	10	10			743	746
74		8	5	0/3	0	5	0	0.6	0	0	0	10			778	785
75		8	5	0/3	0	5	0	0.6	0	0	10	10			744	745
76		4	-5	0/3	0	5	0	0.6	0	7.5	0	0			700	699
77		4	-5	0/3	0	5	0	0.6	0	7.5	10	0			679	680
78		8	-5	0/3	0	5	0	0.6	0	7.5	0	0			701	698
79		8	-5	0/3	0	5	0	0.6	0	7.5	10	0			682	681
80		4	-5	0/3	0	5	0	0.6	0	7.5	0	10			791	792
81		4	-5	0/3	0	5	0	0.6	0	7.5	10	10			752	755
82		8	-5	0/3	0	5	0	0.6	0	7.5	0	10			798	797
83		8	-5	0/3	0	5	0	0.6	0	7.5	10	10			753	754
84		4	0	0/3	0	5	0	0.6	0	7.5	0	0			705	704

TEST RUN NUMBERS

1 7 13 19 25 31 37 43 49 55 61 67 75 76

COEFFICENTS — IDVAR(1) — ID..AR(2) — IDV

α OR β SCHEDULES

NASA-MSFC-MAF

TABLE II. (Continued)

TEST: CA20 | DATA SET/RUN NUMBER COLLATION SUMMARY | DATE: REV. 1/15/75

DATA SET IDENTIFIER	CONFIGURATION	CARRIER α_c	β_c	δ_{ev}	δ_T	ORBITER δ_e	δ_a	MACH	β_o	q_o	ΔX	ΔY	ΔZ	G	α_o 10	α_o 14
RGNO85	747/1 01S1	4	0	0/3	0	5	0	0.6	0	7.5	10	0	A		686	685
86		8	0	0/3	0	5	0	0.6	0	7.5	0	0			702	703
87		8	0	0/3	0	5	0	0.6	0	7.5	10	0			682	684
88		4	0	0/3	0	5	0	0.6	0	7.5	0	10			790	793
89		4	0	0/3	0	5	0	0.6	0	7.5	10	10			748	751
90		8	0	0/3	0	5	0	0.6	0	7.5	0	10			799	796
91		8	0	0/3	0	5	0	0.6	0	7.5	10	10			749	750
92		4	5	0/3	0	5	0	0.6	0	7.5	0	10			789	794
93		4	5	0/3	0	5	0	0.6	0	7.5	10	10			756	759
94		8	5	0/3	0	5	0	0.6	0	7.5	0	10			800	795
95		8	5	0/3	0	5	0	0.6	0	7.5	10	10			757	758
96		4	-5	0/3	0	5	0	0.6	-5	7.5	0	10			804	805
97		8	-5	0/3	0	5	0	0.6	-5	7.5	0	10			811	810
98		4	0	0/3	0	5	0	0.6	-5	7.5	0	10			803	806
99		8	0	0/3	0	5	0	0.6	-5	7.5	0	10			812	809
100		4	5	0/3	0	5	0	0.6	-5	7.5	0	10			802	807
101		8	5	0/3	0	5	0	0.6	-5	7.5	0	10			813	808
102		4	-5	0/3	0	5	0	0.6	-5	7.5	0	10				815

TEST RUN NUMBERS

1 7 13 19 25 31 37 43 49 55 61 67 75 76

COEFFICENTS IDVAR (1) IDVAR (2) NCV

α OR β SCHEDULES

NASA-MSFC-MAF

TABLE II. (Continued)

TEST: CA20 — DATA SET/RUN NUMBER COLLATION SUMMARY — DATE: REV 1/15/75

DATA SET IDENTIFIER	CONFIGURATION	CARRIER α_c	β_c	δ_{ev}	δ_T	ORBITER δ_e	δ_a	MACH	β_o	ϕ_o	ΔX	ΔY	ΔZ	α_o 6	10	14
RGN 103	747/1 O,S1	4	0	0/3	0	5	0	0.6	-5	7.5	0	10	A			814
104		4	-5	0/3	0	5	0	0.6	-5	0	10	0			830	835
105		8	-5	0/3	0	5	0	0.6	-5	0	10	0			841	836
106		4	-5	0/3	0	5	0	0.6	-5	0	0	10			844	
107		4	-5	0/3	0	5	0	0.6	-5	0	10	10			819	820
108		8	-5	0/3	0	5	0	0.6	-5	0	10	10			828	823
109		4	0	0/3	0	5	0	0.6	-5	0	10	0			831	834
110		8	0	0/3	0	5	0	0.6	-5	0	10	0			840	837
111		4	0	0/3	0	5	0	0.6	-5	0	0	10			843	
112		4	0	0/3	0	5	0	0.6	-5	0	10	10			818	821
113		8	0	0/3	0	5	0	0.6	-5	0	0	10				846
114		8	0	0/3	0	5	0	0.6	-5	0	10	10			827	824
115		4	5	0/3	0	5	0	0.6	-5	0	10	0			832	833
116		8	5	0/3	0	5	0	0.6	-5	0	10	0			839	838
117		4	5	0/3	0	5	0	0.6	-5	0	0	10			845	
118		4	5	0/3	0	5	0	0.6	-5	0	10	10			817	822
119		8	5	0/3	0	5	0	0.6	-5	0	10	10			826	825
120		4	-5	0	0	5	0	0.6	-5	0	0	10			765	768

TEST RUN NUMBERS

1 7 13 19 25 31 37 43 49 55 61 67 75 76

COEFFICENTS IDVAR (1) IDVAR (2) NDV

α OR β SCHEDULES

NASA-MSFC-MAF

TABLE II. (Continued)

TEST: CA20 | DATA SET/RUN NUMBER COLLATION SUMMARY | DATE: Rev. 1/15/75

DATA SET IDENTIFIER	CONFIGURATION	CARRIER				ORBITER										TEST RUN NUMBERS		
		α_c	β_c	δ_{sv}	δ_r	δ_e	δ_a	MACH		e_o	γ_o	ΔX	ΔY	ΔZ	6	10	14	
RGN121	747/1 O, S1	8	-5	0	0	5	0	0.6		-5	0	0	10	4		766	767	
122		4	0	0	0	5	0	0.6		-5	0	0	10			761	764	
123		8	0	0	0	5	0	0.6		-5	0	0	10			762	763	
124		4	5	0	0	5	0	0.6		-5	0	0	10			769	772	
125		8	5	0	0	5	0	0.6		-5	0	0	10			770	771	
126	747/1 O_2 S1	4	-5	0/3	0	5	0	0.6		0	0	0	0			656		
127		4	-5	0/3	0	5	0	0.6		0	0	10	0			657		
128		4	-5	0/3	0	5	0	0.6		0	0	20	0			669		
129		4	0	0/3	0	5	0	0.6		0	0	0	0			652	653	
130		4	0	0/3	0	5	0	0.6		0	0	10	0			661	659	
131		4	0	0/3	0	5	0	0.6		0	0	20	0			665	666	
132		8	0	0/3	0	5	0	0.6		0	0	0	0			655	654	
133		8	0	0/3	0	5	0	0.6		0	0	10	0			658	660	
134		8	0	0/3	0	5	0	0.6		0	0	20	0			668	667	
135		4	-5	0/3	0	5	0	0.6		0	0	0	10			728		
136		4	-5	0/3	0	5	0	0.6		0	0	10	10			732		
137		4	0	0/3	0	5	0	0.6		0	0	0	10			727		
138		4	0	0/3	0	5	0	0.6		0	0	10	10			731		

1 7 13 19 25 31 37 43 49 55 61 67 75 76

COEFFICENTS IDVAR(1) IDVAR(2) NDV

α OR β SCHEDULES

NASA-MSFC-MAF

TABLE II. (Continued)

TEST: CA20 — DATA SET/RUN NUMBER COLLATION SUMMARY — DATE: REV. 1/15/75

DATA SET IDENTIFIER	CONFIGURATION	CARRIER α_c	β_c	δ_{ev}	δ_T	ORBITER δ_e	δ_a	MACH	θ_o	ϕ_o	ΔX	ΔY	ΔZ	α_o 6	10	14	TEST RUN NUMBERS
RUN 139	747/1 O_2 S_1	4	5	0/3	0	5	0	0.6	0	0	0	10	▲		729		
140	↓	4	5	0/3	0	5	0	0.6	0	0	10	10	↓		733		
141	747/1 O_1 S_1	4	0	10/13	0	5	0	0.6	0	0	0	0			707	708	
142	↓	4	0	-10/-7	0	5	0	0.6	0	0	0	0			709	710	
143	↓	4	0	0/3	15	5	0	0.6	0	0	0	0			711	712	
144	747/1 O_2 S_1	4	0	0/3	15	5	0	0.6	0	0	0	0			725		
145	747/1 O_1 S_1	4	0	0/3	0	0	0	0.6	0	0	0	0			719	720	
146	↓	4	0	0/3	0	10	0	0.6	0	0	0	0			714	715	
147	↓	4	0	0/3	0	10	0	0.3	0	0	0	0			717		
148	↓	4	0	0/3	0	10	0	0.7	0	0	0	0			716		
149	↓	4	0	0/3	0	5	-10	0.6	0	0	0	0	↓		722	723	

1 7 13 19 25 31 37 43 49 55 61 67 75 76

COEFFICENTS — IDVAR (1) IDVAR (2) IDV

α OR β SCHEDULES

NASA-MSFC-MAF

TABLE II. - DATA SET/RUN NUMBER COLLATION SUMMARY
(Continued)

Symbol Definition

Orbiter

O_1 = Vertical tail off (V_8)
Tail cone on ($TC_{5.1}$)

O_2 = Vertical tail off (V_8)
Tail cone off
with strut S_1

O_3 = Vertical tail on (V_8)
Tail cone on ($TC_{5.1}$)

O_4 = Tail cone on ($TC_{5.1}$)
Vertical Tail
simulating dummy
strut

O_5 = Vertical tail on (V_8)
Tail cone off

O_6 = MPS base plate off
Vertical tail on (V_8)

O_7 = MPS base plate off,
S_2 cover plate #1 off,
Vertical tail on

O_8 = MPS base plate off,
S_2 cover plate #2 off,
Vertical tail on

O_9 = MPS base plate on,
Vertical tail off
with strut S_2

Orbiter Support Strut

S_1 = Orbiter support blade strut, upper entry position

S_2 = Orbiter support blade strut, lower entry position

S_3 = Orbiter dummy support blade strut

Carrier

747/0 = Carrier with spoilers and flaps retracted

747/1 = Carrier with spoilers deflected 45° and flaps retracted

α, β, and ΔZ Schedules

⚠ α_c = 0°, 2°, 4°, 6°, 8°, 10°

⚠ β_c = -10°, -7°, -5°, -3°, -2°, -1°, 0°, +1°, +2°, +3°, +5°, +10°

⚠ α_o = 6°, 8°, 10°, 12°, 14°, 16°, 18°

TABLE II. (Concluded)

⚠ ΔZ = 0'*, 3', 7.5', 15', 30', 45', 60'

⚠ β_0 = 2.5°, 0°, -2.5°, -5°, -7.5°, -10°, -15°

* minimum attainable

Table III. - MODEL DIMENSIONAL DATA
A. Carrier Model

MODEL COMPONENT: BODY - $B_{27.8}$

GENERAL DESCRIPTION: Body 74-7 Project with A.P.V.

Model Scale: 0.03

Drawing Number: 65-69716

Dimensions:	Full Scale	Model Scale
Length, in	2702	81.06
Max. Width, in		7.66
Area		
Wetted, ft^2		12.71

Table IIIA - Continued.

MODEL COMPONENT: F_o

GENERAL DESCRIPTION Clean Wing

Flaps Up

Table IIIA - Continued

MODEL COMPONENT: Horizontal Tail $H_{15.6}$

GENERAL DESCRIPTION: Horizontal Tail with Vertical Fins on each Tip at Body B. L. 12.82

Model Scale 0.03

Drawing Number 1319-55 1/2 - 60

Dimension:	Full Scale	Model Scale
EXPOSED DATA (one side)		
Area-ft^2	200	

Table IIIA - Continued.

MODEL COMPONENT: M_{25}

GENERAL DESCRIPTION: Inboard 747, JT9D nacelle strut

Model Scale: 0.03

Dimensions	Full Scale	Model Scale
Wing B.L. of nacelle C_L, in.	470.0	14.100
Cont angle deg. inboard	2	2

TABLE IIIA - Continued

MODEL COMPONENT: M_{26}

GENERAL DESCRIPTION: Outboard 747, JT9D Strut

Model Scale: 0.03

Drawing Number: 937-590

Dimensions	Full Scale	Model Scale
W L of C_L, in		25.020
Cant angle, deg inboard	2	2

Table IIIA - Continued.

MODEL COMPONENT: N_{57}

GENERAL DESCRIPTION Inboard Fan Cowl and Primary 747 Nacelle, Flow Through Type

Model Scale: 0.03

Drawing Number: S.O. 1007-96-97

Table IIIA - Continued

MODEL COMPONENT: N_{58}

GENERAL DESCRIPTION: Outboard Fan Cowl and Primary 747 Nacelle, Flow Through Type

Model Scale: 0.03

Drawing Number S.O. 1.007-96,-97

Table III A - Continued.

MODEL COMPONENT: Spoilers S_{1-12}

GENERAL DESCRIPTION: Multi-panel flight spoilers. Four outboard and two inboard spoiler per side. Subscript denotes spoiler panel S_1 is the most outboard L.H. panel and S_{12} is most outboard R.H. panel.

747 Model Scale: 0.03 Model: 1065

Drawing No.: 65-71450, S.O. 1065-51, -59, -81, -173

Dimensions: (One panel)	Full Scale Ft.	Model Scale IN.
Outboard S_{1-4} and S_{9-12} (Ft^2)	21.48	0.019 ft^2
Span (equivalent)	6.25	2.25
Chord	3.44	1.238
Inboard S_{5-6} and S_{7-8} (Ft^2)	35.31	
Span (equivalent)	7.50	2.70
Chord	4.71	1.696

Table III A - Continued

MODEL COMPONENT: T_{19}

GENERAL DESCRIPTION: Flap Track Fairings,

4 on each side

Model Scale: 0.03

Drawing Number: S.O. 1007-403

DIMENSIONS	Full Scale	Model Scale
WBL of Track no. 1, in.	235.3	7.06
2, in.	353.0	10.59
3, in.	652.0	19.56
4, in	743.6	22.31
Distance from wing Trailing edge to: Track Trailing edge, in.	50.0	1.5

Table III A - Continued.

MODEL COMPONENT: Vertical $V_{9.1}$

GENERAL DESCRIPTION: Swept Vertical Tail

Model Scale: 0.03

Drawing Number: 65-6.9716; 1007-26,-610; 937-319

Dimensions:	Full Scale	Model Scale
TOTAL DATA		
Area (Theo) -- Ft^2	630.0	.567
Span (theo) - In.	386.5	11.595
Sweep-Back Angles, Degrees		
Leading Edge	50.12	50.12
Chords:		
Root (Theo) WP-in.	461.67	13.85
Tip (Theo) WP-in.	157.0	4.71
Cus. Sta. of .25 MAC	2529.6	75.888

Table IIIA - Continued.

MODEL COMPONENT: WING-^{W}44.1

GENERAL DESCRIPTION: Swept 747 Wing

Model Scale: 0.03

Test No.

DWG. No. 65-89585

Dimensions:	Full Scale	Model Scale
Total Data		
Area (Theo.) Ft^2 Planform	5500	4.95
Span (Theo In.	2348.04	70.441
Aspect Ratio	6.96	6.96
Incidence Angle, degrees	7	7
Chords:		
MAC	327.78	9.83
Fus. Sta. of .25 MAC	1339.90	40.197
W.P. of .25 MAC	190.80	5.723

TABLE IIIA - Continued.

MODEL COMPONENT: ATTACH STRUCTURE - AT_{38}

GENERAL DESCRIPTION: Orbiter to carrier forward attach struts.

MODEL SCALE: 0.030

DRAWING NO.: BOEING 1319-43

DIMENSIONS:	SCALE FULL	SCALE MODEL
AT_{38}	15.5	0.465
$AT_{38.1}$	91.67	2.75
$AT_{38.2}$	75.00	2.25
$AT_{38.2A}$	75.0	2.25
$AT_{38.3}$	ROD REMOVED	ROD REMOVED

TABLE IIIA - Concluded.

MODEL COMPONENT: ATTACH STRUCTUKE - AT_{39}

GENERAL DESCRIPTION: Orbiter to carrier aft attachment, pitch adjustable from 0 to 10 deg.

MODEL SCALE: 0.030

DRAWING NO.: Boeing 50 1319-37.

DIMENSIONS:	FULL SCALE	MODEL SCALE
Pivot location:		
In., X_C	400.0	12.0
In., Z_C	160.7	4.821
Equivalent Span (At 0 deg i_{orb}):		
Centerline orbiter	521.0	15.63

TABLE III MODEL DIMENSIONAL DATA
B. Orbiter

MODEL COMPONENT : BODY - B_{26}

GENERAL DESCRIPTION : Configuration 140A/B orbiter fuselage.

NOTE: B_{26} is identical to B_{24} except underside of fuselage has been refaired to accept W_{116}.

MODEL SCALE: 0.030 MODEL DWG: SS-A00147, Release 12

DRAWING NUMBER : VL70-000143B, -000200, -000205, -006089, -000145
VL70-000140A, -000140B

DIMENSIONS :	FULL SCALE	MODEL SCALE
Length (OML: Fwd Sta X_o =235), In.	1293.3	38.799
Length (IML: Fwd Sta X_o=238), In.	1290.3	38.709
Max Width (At X_o = 1528.3), In.	264.0	7.920
Max Depth (At X_o = 1464), In.	250.0	7.500
Fineness Ratio	0.264	0.264
Area - Ft^2		
Max. Cross-Sectional	340.88	0.307
Planform		
Wetted		
Base		

TABLE IIIB - Continued.

MODEL COMPONENT : CANOPY - C_9

GENERAL DESCRIPTION : Configuration 3A. Canopy used with fuselage B_{26}.

MODEL SCALE: 0.030 MODEL DWG: SS-A00147, Release 12

DRAWING NUMBER : VL70-000143A

DIMENSIONS :	FULL SCALE	MODEL SCALE
Length (X_o =434.643 to 578), In.	143.357	4.301
Max Width (At X_o = 513.127), In.	152.412	4.572
Max Depth (At X_o = 485.0), In.	25.00	0.750
Fineness Ratio		
Area		
Max. Cross-Sectional		
Planform		
Wetted		
Base		

TABLE IIIB - Continued.

MODEL COMPONENT: SLOTTED ELEVON (6 INCH GAP) - E_{43}

GENERAL DESCRIPTION: Configuration 140A/B orbiter elevon.

NOTE: E_{43} is a slotted version of E_{26}. Data are for one side.

MODEL SCALE: 0.030

DRAWING NUMBER: VL70-000200, -006089, -006092

DIMENSIONS:	FULL-SCALE	MODEL SCALE
Area - Ft^2	210.00	0.189
Span (equivalent) , In.	349.2	10.476
Inb'd equivalent chord , In.	118.004	3.540
Outb'd equivalent chord, In.	55.192	1.656
Ratio movable surface chord/ total surface chord		
At Inb'd equiv. chord	0.2096	0.2096
At Outb'd equiv. chord	0.4004	0.4004
Sweep Back Angles, degrees		
Leading Edge	0.00	0.00
Tailing Edge	-10.056	-10.056
Hingeline	0.00	0.00
Area Moment (Product of Area & $\bar{c}$) Normal to hingeline, Ft^3	1587.25	0.043
Mean Aerodynamic Chord , In.	90.7	2.721

TABLE IIIB - Continued.

MODEL COMPONENT : BODY FLAP - F_8

GENERAL DESCRIPTION : Configuration 140A/B orbiter body flap

NOTE: Hingeline located at X_o = 1528.3, Z_o = 284.3

MODEL SCALE: 0.030 MODEL DWG: SS-A00147, Release 12

DRAWING NUMBER : VL70-000140A, -000145

DIMENSIONS :	FULL SCALE	MODEL SCALE
Length (X_o=1520 - 1613) In.	93.00	2.79
Max Width , IN.	262.00	7.86
Max Depth (X_o = 1520), In.	23.00	0.69
Fineness Ratio		
Area - Ft^2		
Max. Cross-Sectional		
Planform	150.525	0.1355
Wetted		
Base	41.847	0.0377

TABLE IIIB - Continued.

MODEL COMPONENT : OMS POD - M_{16}

GENERAL DESCRIPTION : Configuration 140C

Orbiter OMS pod - Short pod

MODEL SCALE: 0.030

DRAWING NUMBER : VL70-008401, -008410

DIMENSIONS :	FULL SCALE	MODEL SCALE
Length (OMS Fwd Sta. X_o=1310.5)	258.50	7.755
Max Width (At X_o = 1511), In.	136.8	4.104
Max Depth (At X_o = 1511), In.	74.70	2.241
Fineness Ratio	2.484	2.484
Area - Ft^2		
Max. Cross-Sectional	58.864	0.053
Planform		
Wetted		
Base		

TABLE IIIB - Continued.

MODEL COMPONENT: MPS NOZZLES - N_{24}

GENERAL DESCRIPTION: Configuration 140A/B orbiter MPS nozzles

MODEL SCALE: 0.030 MODEL DWG: SS-A00147, Release 12

DRAWING NUMBER: VL70-005030A, -000140A

DIMENSIONS:	FULL SCALE	MODEL SCALE
MACH NO.		
Length - In.		
Gimbal Point to Exit Plane	157.00	4.71
Throat to Exit Plane	99.2	2.976
Diameter - In.		
Exit	91.00	2.73
Throat		
Inlet		
Area - ft^2		
Exit	45.166	0.0407
Throat		
Gimbal Point (Station) - In.		
Upper Nozzle		
X	1445.00	43.35
Y	0.0	0.0
Z	443.00	13.29
Lower Nozzles		
X	1468.170	44.045
Y	±53.00	± 1.59
Z	342.640	10.279
Null Position - Deg.		
Upper Nozzle		
Pitch	16	16
Yaw	0	0
Lower Nozzle		
Pitch	10	10
Yaw	3.5	3.5

ORIGINAL PAGE IS
OF POOR QUALITY

TABLE IIIB - Continued.

MODEL COMPONENT: OMS NOZZLES - N_{28}

GENERAL DESCRIPTION: Configuration 140A/B orbiter OMS Nozzles

MODEL SCALE: 0.030

DRAWING NUMBER: VL70-000140A (Location), SS-A00106, Release 5 (Contour)

DIMENSIONS:	FULL SCALE	MODEL SCALE
MACH NO.		
Length - In.		
Gimbal Point to Exit Plane		
Throat to Exit Plane		
Diameter - In.		
Exit		
Throat		
Inlet		
Area - ft^2		
Exit		
Throat		
Gimbal Point (Station) In.		
Left ~~Upper~~ Nozzle		
X_o	1518.00	45.54
Y_o	-88.0	-2.64
Z_o	492.0	14.76
Right ~~Lower~~ Nozzles		
X_o	1518.0	45.54
Y_o	88.0	2.64
Z_o	492.0	14.76
Null Position - Deg.		
Left ~~Upper~~ Nozzle		
Pitch	±8	±8
Yaw	$13^o17'$ Outb'd, $2^o30'$ Inb'd	Same
Right ~~Lower~~ Nozzle		
Pitch	±8	±8
Yaw	$13^o17'$ Outb'd, $2^o17'$ Inb'd	

ORIGINAL PAGE IS OF POOR QUALITY

TABLE IIIB - Continued.

MODEL COMPONENT: RUDDER - R_5

GENERAL DESCRIPTION: Configuration 140C orbiter rudder (identical to configuration 140A/B rudder)

MODEL SCALE: 0.030

DRAWING NUMBER: VL70-000146B, -000095

DIMENSIONS:	FULL-SCALE	MODEL SCALE
Area - Ft^2	100.15	0.090
Span (equivalent), In.	201.00	6.03
Inb'd equivalent chord, In.	91.585	2.748
Outb'd equivalent chord, In.	50.833	1.525
Ratio movable surface chord/ total surface chord		
At Inb'd equiv. chord	0.400	0.400
At Outb'd equiv. chord	0.400	0.400
Sweep Back Angles, degrees		
Leading Edge		
Tailing Edge	26.25	26.25
Hingeline	34.83	34.83
Area Moment (Product of area and $\bar{c}$), Ft^3	610.92	0.0165
Mean Aerodynamic Chord, Inches	73.2	2.196

TABLE IIIB - Continued.

MODEL COMPONENT : ORBITER TAILCONE - $TC_{5.1}$

GENERAL DESCRIPTION : Fairing mounted on orbiter fuselage base for ferry missions.

MODEL SCALE: 0.030

DRAWING NUMBER : Boeing Dwg No.: 1319-71

DIMENSIONS :	FULL SCALE	MODEL SCALE
Length	445.83	13.375
Max Width	303.33	9.10
Max Depth Box Height	265.00	7.95
Fineness Ratio		
Area - Ft^2		
Projected frontal area	324.105	0.2917
Max. Cross-Sectional		
Planform		
Wetted		
Base		

TABLE IIIB - Continued.

MODEL COMPONENT: VERTICAL - V_8

GENERAL DESCRIPTION: Configuration 140A/B orbiter vertical tail

MODEL SCALE: 0.030 MODEL DWG: SS-A00148, Release 6

DRAWING NUMBER: VL70-000146A

DIMENSIONS:	FULL SCALE	MODEL SCALE
TOTAL DATA		
Area (Theo) - Ft^2		
Planform	413.253	0.372
Span (Theo) - In.	315.720	9.472
Aspect Ratio	1.675	1.675
Rate of Taper	0.507	0.507
Taper Ratio	0.404	0.404
Sweep-Back Angles, Degrees.		
Leading Edge	45.000	45.000
Trailing Edge	26.25	26.25
0.25 Element Line	41.13	41.13
Chords:		
Root (Theo) WP	268.50	8.055
Tip (Theo) WP	108.47	3.254
MAC	199.81	5.994
Fus. Sta. of .25 MAC	1463.35	43.901
W.P. of .25 MAC	635.52	19.066
B.L. of .25 MAC	0.00	0.00
Airfoil Section		
Leading Wedge Angle - Deg.	10.00	10.00
Trailing Wedge Angle - Deg.	14.92	14.92
Leading Edge Radius	2.00	0.060
Void Area	13.17	0.119
Blanketed Area	0.00	0.00

TABLE IIIB - Concluded.

MODEL COMPONENT: WING-W_{116}

GENERAL DESCRIPTION: Configuration 4

NOTE: Identical to W_{114} except airfoil thickness. Dihedral angle is along trailing edge of wing. Geometric twist = 0.

MODEL SCALE: 0.030

TEST NO.

DWG. NO. VL70-000140A, -000200

DIMENSIONS:	FULL-SCALE	MODEL SCALE
TOTAL DATA		
Area (Theo.) Ft^2 Planform	2690.00	2.421
Span (Theo In.	936.68	28.10
Aspect Ratio	2.265	2.265
Rate of Taper	1.177	1.177
Taper Ratio	0.200	0.200
Dihedral Angle, degrees	3.500	3.500
Incidence Angle, degrees	0.500	0.500
Aerodynamic Twist, degrees		
Sweep Back Angles, degrees		
Leading Edge	45.00	45.00
Trailing Edge	- 10.056	- 10.056
0.25 Element Line	35.209	35.209
Chords:		
Root (Theo) B.P.0.0.	689.24	20.677
Tip, (Theo) B.P.	137.85	4.136
MAC	474.81	14.244
Fus. Sta. of .25 MAC	1136.83	34.105
W.P. of .25 MAC	290.58	8.717
B.L. of .25 MAC	182.13	5.464
EXPOSED DATA		
Area (Theo) Ft^2	1751.50	1.576
Span, (Theo) In. BP108	720.68	21.620
Aspect Ratio	2.059	2.059
Taper Ratio	0.245	0.245
Chords		
Root BP108	562.09	16.863
Tip 1.00 $\frac{b}{2}$	137.85	4.136
MAC	392.83	11.785
Fus. Sta. of .25 MAC	1185.98	35.579
W.P. of .25 MAC	294.30	8.829
B.L. of .25 MAC	251.77	7.553
Airfoil Section (Rockwell Mod NASA) XXXX-64		
Root $\frac{b}{2}$ =	0.113	0.113
Tip $\frac{b}{2}$ =	0.120	0.120
Data for (1) of (2) Sides		
Leading Edge Cuff Planform Area Ft^2	113.18	0.102
Leading Edge Intersects Fus M. L. @ Sta	500.00	15.00
Leading Edge Intersects Wing @ Sta	1024.00	30.72

Table IV.
CA20 DATASET DESCRIPTION
(Raw Data)

DATASET TYPE	DESCRIPTION
RGNXXX	Longitudinal coefficient schedule for 747 carrier balance data which contain "standard" wind tunnel corrections.
AGNXXX	Lateral coefficient schedule for 747 carrier balance data which contain "standard" wind tunnel corrections.
BGNXXX	Longitudinal coefficient schedule for orbiter balance data which contain "standard" wind tunnel corrections.
CGNXXX	Lateral coefficient schedule for orbiter balance data which contain "standard" wind tunnel corrections.
DGNXXX	Pressure coefficient data as follows: Q(PSF) - dynamic pressure, psf PB1, PB2, PB3 - orbiter base pressure coefficients PCAV - orbiter cavity pressure coefficient PSC - carrier cavity pressure coefficient LHLS, RHLS - left and right hand pressure coefficients in proximity to orb. vert. tail for blade/sting support system. LHVERT, RHVERT - identical to LHLS and RHLS but for base sting support system.

ORIGINAL PAGE IS
OF POOR QUALITY

Table V.
CA20 COEFFICIENT SCHEDULE
(Raw Data)

Dataset Type	Dataset•Sequence	1st ID	2nd ID	Coefficients									
				1	2	3	4	5	6	7	8	9	10
RGNXXX	034-036	MACH	ALPHAW	BETA	Q(PSF)	CL	CD	CLM	CY	CLN	CSL		
	037	MACH	ALPHAO	ALPHAW	BETA	DY	DZ	CL	CD	CLM	CY	CLN	CSL
	038 & 039	MACH	BETA	ALPHAW	ALPHAO	DY	DZ	CL	CD	CLM	CY	CLN	CSL
	040-149	ALPHAO	DZ	MACH	DX	DY	BETAO	PHI	ALPHAW	BETA	CL	CD	CLM
AGNXXX	040-149	ALPHAO	DZ	MACH	DX	DY	BETAO	PHI	ALPHAW	BETA	CY	CLN	CSL
BGNXXX	001-011 & 015-033 & 037	MACH	ALPHAO	BETAO	PHI	Q(PSF)	CL	CD	CLM	CY	CLN	CSL	
	012 & 013	MACH	DZ	ALPHAO	BETAO	PHI	Q(PSF)	CL	CD	CLM	CY	CLN	CSL
	014	MACH	BETAO	ALPHAO	PHI	Q(PSF)	CL	CD	CLM	CY	CLN	CSL	
	038 & 039	MACH	BETA	ALPHAW	ALPHAO	DY	DZ	CL	CD	CLM	CY	CLN	CSL
	040-149	ALPHAO	DZ	MACH	DX	DY	BETAO	PHI	ALPHAW	BETA	CL	CD	CLM
CGNXXX	040-149	ALPHAO	DZ	MACH	DX	DY	BETAO	PHI	ALPHAW	BETA	CY	CLN	CSL
DGNXXX	001-011 & 015-019 & 037	MACH	ALPHAO	Q(PSF)	PB1	PB2	PB4	LHLS	RHLS	PCAV			
	012 & 013	MACH	DZ	Q(PSF)	PB1	PB2	PB4	LHLS	RHLS	PCAV			
	014	MACH	BETAO	Q(PSF)	PB1	PB2	PB4	LHLS	PHLS	PCAV			
	020-033	MACH	ALPHAO	Q(PSF)	PB1	PB2	PB4	LHVERT	RHVERT	PCAV			
	034-036	MACH	ALPHAW	PSC									
	038 & 039	MACH	BETA	Q(PSF)	PB1	PB2	PB4	LHLS	RHLS	PCAV			
	040-149	ALPHAO	DZ	Q(PSF)	PB1	PB2	PB4	LHLS	PHLS	PCAV			

Note: ID--Independent variable

Table VI
CA20 DATASET DESCRIPTION
(INTERPOLATED/INCREMENTED DATASETS)

DATASET TYPE	DESCRIPTION
MGNXXX	Interpolated data for 747 carrier balance data in carrier reference dimensions.
NGNXXX	Interpolated data for orbiter balance data in orbiter reference dimensions.
UGNXXX	Incremental data - 747 carrier data in presence of orbiter (mated) minus 747 carrier alone data in 747 carrier reference dimensions.
VGNXXX	Incremental data - Orbiter data in presence of 747 carrier (mated) minus orbiter alone data in orbiter reference dimensions.

NOTE: Datasets M, N, U, and V contain the full ΔZ arrav of 0 3 7.5 15 30 40 and 60 ft. Therefore, the datasets reflect extrapolations for some individual test arrays of ΔZ. For subsequent data plotting, the full ΔZ arrays were truncated to the actual tested arrays.

Table VII. CA20 INTERPOLATED DATASET SUMMARY

(M AND N DATASETS)

DATASET(S)	INTERPOLATED VARIABLES (1) (2)
NGN001 → 011	MACH, ALPHAO
NGN012 → 013	MACH, DZ
NGN014	MACH, BETAO
NGN015 → 033	MACH, ALPHAO
MGN034 → 036	MACH, ALPHAW
MGN037 NGN037	MACH, ALPHAO
MGN038 NGN038 → 039	MACH, BETAC
MGN040 NGN040 → 048	ALPHAO, DZ (SEE NOTE 3)
MGN049 NGN049 → 119 MGN126 NGN126 → 140	ALPHAO, DZ, DX, ALPHAW, DY, BETAO, BETAC, PHI
MGN141 NGN141 → 149	ALPHAO, DZ
MGN120 NGN120 → 125	ALPHAO, DZ, BETAC, ALPHAW

NOTES:

(1) Interpolation procedure:

Number of Values Available for Interpolation	Interpolation Procedure
1	Substitute actual test value with a nominal test value (Note 3 below)
2	Straight line
3	Parabolic spline fit
4 → ∞	Cubic spline fit

(2) BETA = BETAC

(3) Interpolation was versus DZ and ALPHAO; however, since each of these datasets (40 → 48) has only one ALPHAO there was therefore no ALPHAO interpolation. The recorded test ALPHAO was replaced with a nominal test ALPHAO (i.e., 8, 12, or 16) so that the only interpolation was versus DZ.

Table VII. Concluded.

(4) Interpolation on DX was not performed on all datasets due to large data fluxuations from the nominal condition.

(INTERFERENCE) - (ISOLATED)

(U AND V DATASETS)

BASE DATASET	VEHICLE	BETAC, deg.	ALPHAW, deg.	BETAO, deg.	ELEVON, deg.	AILRON, deg.
MGN034	CARRIER (1)	-5	0	NA	NA	NA
			4			
			8			
MGN035		0	0			
			4			
			8			
MGN036		5	0			
			4			
			8			
NGN007	ORBITER-O_1S_1 (2)	NA	NA	-5	5	0
NGN010				0	5	
NGN008					0	
NGN011					10	
NGN009					5	-10
NGN018	ORBITER-O_2S_1 (2)				5	0

NOTES:

(1) ALPHAW Sweep (0°, 4°, 8°)

(2) ALPHAO Sweep (6°, 8°, 10°, 12°, 14°, 16°, 18°)

(3) Procedure - (a) Interpolate base datasets to various nominal α and β combinations.

(b) Subtract appropriate interpolated base dataset from interpolated separation (mated) data; except for datasets 45 thru 48 which were utilized to provide the increment due to attach hardware as follows:

Resulting Dataset Number	First Dataset Number	Second Dataset Number
UGN045	MGN045	MGN049 @ ALPHAO = 8
VGN045	NGN045	NGN049 @ ALPHAO = 8
UGN046	MGN046	MGN052 @ ALPHAO = 12
VGN046	NGN046	NGN052 @ ALPHAO = 12
UGN047	MGN047	MGN055 @ ALPHAO = 16
VGN047	NGN047	NGN055 @ ALPHAO = 16
UGN048	MGN048	MGN046
VGN048	NGN048	NGN046

INCREMENT = (First Dataset) - (Second Dataset)

Datasets 45 thru 48 interpolated per note (3) on "Interpolated Dataset Summary".

Datasets 49, 52, and 55 interpolated versus ALPHAO, DZ, DX, ALPHAW, DY, BETAO, BETAC, PHI.

Table IX. SPECIAL INTERPOLATION FOR CONFIGURATIONS WITH ATTACH HARDWARE

RESULTANT DATASET SGNO__ 1		CONFIGURATION	INPUT DATASETS			
			$\beta_O = 0°, \beta_C = 0°$			
			α_O	8°	12°	16°
CARRIER	ORBITER		α_W	2°	6°	10°
A	B	747/0 O_1 S_1 AT_{38} AT_{39}		40	41	42
E	F	747/1 O_1 S_1 AT_{38} AT_{39}		45	46	47
I	J	747/1 O_1 S_1		49		
K	L	747/1 O_1 S_1			52	
M	N	747/1 O_1 S_1				55
			$\alpha_O = 12°, \alpha_W = 5.83°$			
			β_O	-5°	0°	
			β_C	-5°	0°	
C	D	747/0 O_1 S_1 AT_{38} AT_{39}		43	41	
G	H	747/1 O_1 S_1 AT_{38} AT_{39}		48	46	

NOTES:

(1) Orbiter data were interpolated versus α_O and ΔZ

(2) Carrier data were interpolated versus α_W and ΔZ

(3) The interpolation assumes a constant incidence angle between Orbiter and Carrier even though they were mounted on separate support systems (see Configuration A, in Figure 2F).

(4) Resultant datasets SGNO__ 1 have both lateral and longitudinal coefficient data.

Table X.

SPECIAL INTERPOLATED INCREMENTS FOR CONFIGURATIONS WITH ATTACH HARDWARE

RESULTANT DATASET		INPUT DATASETS			
		$\beta_O = 0°$ $\beta_C = 0°$			
		α_O	8°	12°	16°
		α_W	2°	6°	10°
CARRIER	ORBITER				
WGNR45	XGNB45		45- 49		
WGNR46	XGNB46			46-52	
WGNR47	XGNB47				47-55
		$\alpha_O = 12°$, $\alpha_W = 5.83°$			
WGNR48	XGNB48	48-46			
WGNR43	XGNB43	43-41			
WGNRDB	XGNBDB	(48, 46) - (43, 41)			
		$\beta_O = 0°$, $\beta_C = 0°$			
WGNRCA	XGNBCA	(45, 46, 47) - (40, 41, 42)			

NOTE: Resultant datasets have incremental lateral and longitudinal coefficient data.

Table XI. CARRIER SUPPORT STRUT TARE AND INTERFERENCE CORRECTION PROCEDURE

α, deg.	β, deg.	CA5 Run with Image Strut	CA5 Run without Image Strut
1A	0	15	99
2	2	20	104
6	2	23	108
8	2	27	112

α_W = 1A = 3° → 16°, 1° increments

β = 2 = -12°, -10°, -8°, -6°, -4° -3° -2°,
-1°, 0°, 1°, 2°, 3°, 4°, 6°, 8°, 10°, 12°

Correction = (Run with Image Strut) - (Run without Image Strut)

"Correction" datasets are 6GMDA4, 6GMDB4 and 6GMDC4, which were interpolated for α_W = 2° to 12° and β = -5°, 0°, +5°, respectively.

Corrected = (CA20 Data) - (Correction)

"Corrected" datasets are 5GN034-149. For the DZ and α_0 sweeps (2nd independent variable), the "correction" is a constant value for all coefficients. For the α_W and β sweeps (2nd independent variable), the "correction" is a function of α_W and β, respectively.

Note:

"Correction: and "corrected" data are shown in the Appendix.

Notes:

1. Positive directions of force coefficients, moment coefficients, and angles are indicated by arrows
2. For clarity, origins of wind and stability axes have been displaced from the center of gravity

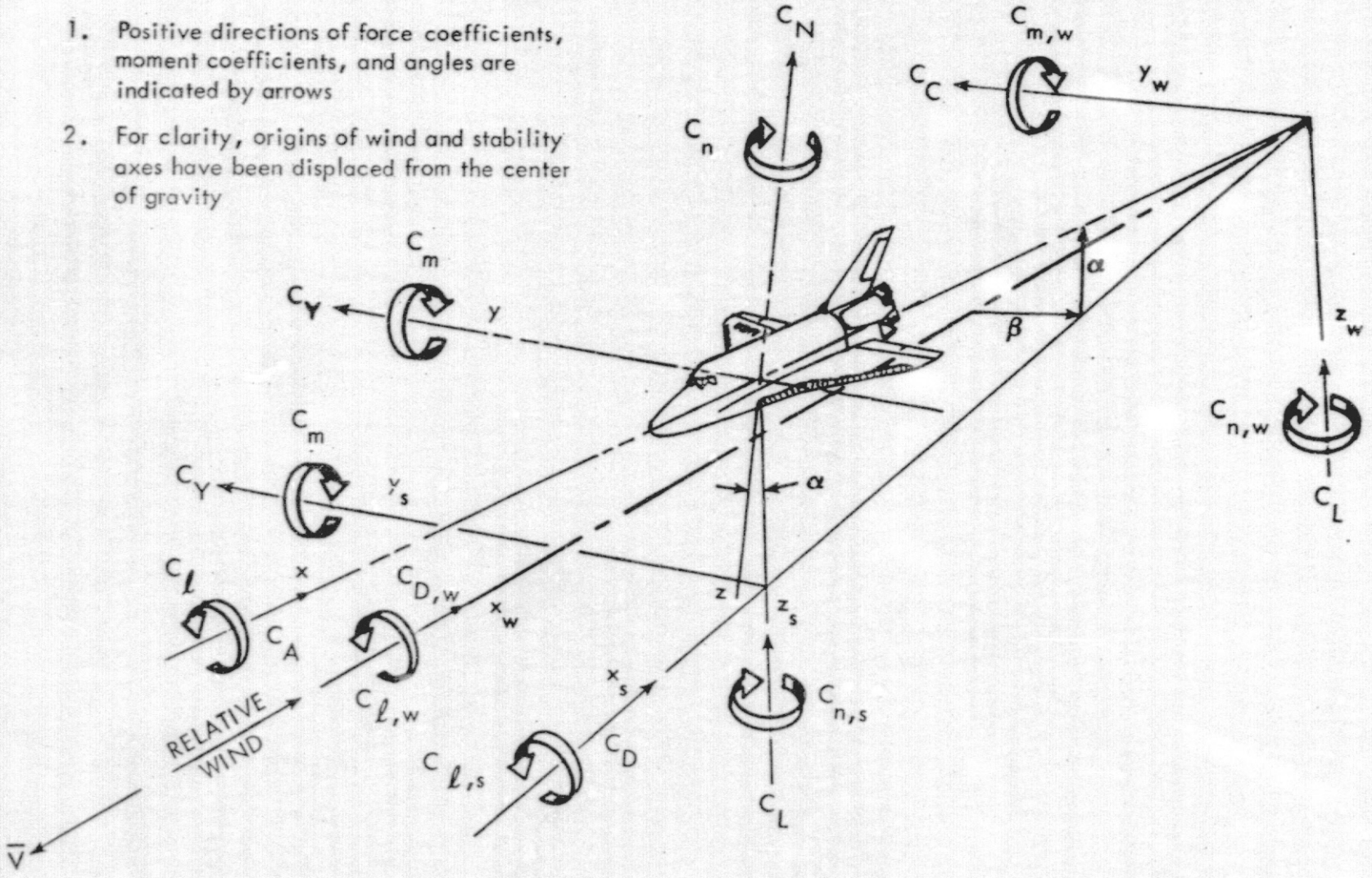

a. General

Figure 1. - Axis systems.

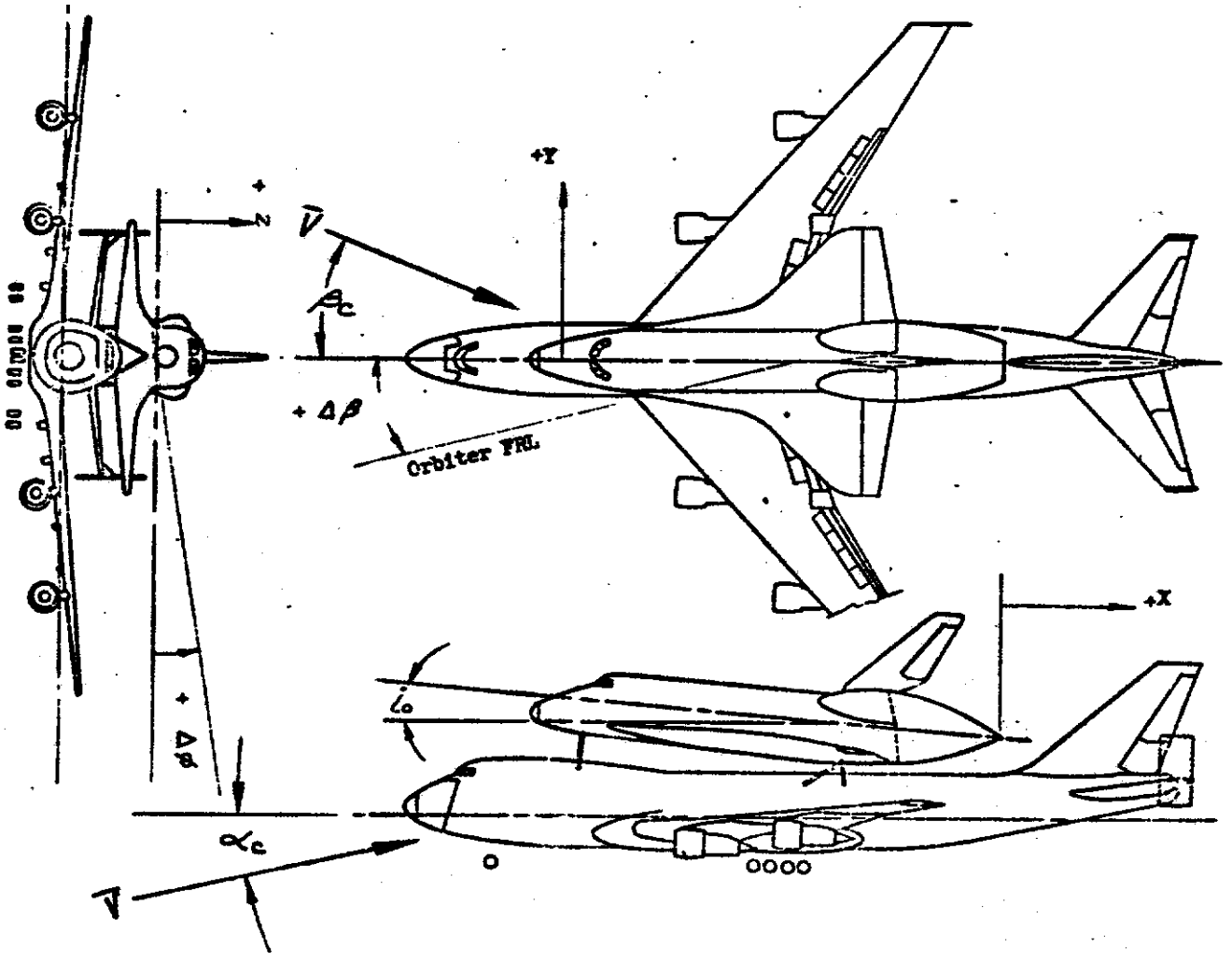

b. Orbiter/747 Axis System Definition

Figure 1. - Concluded.

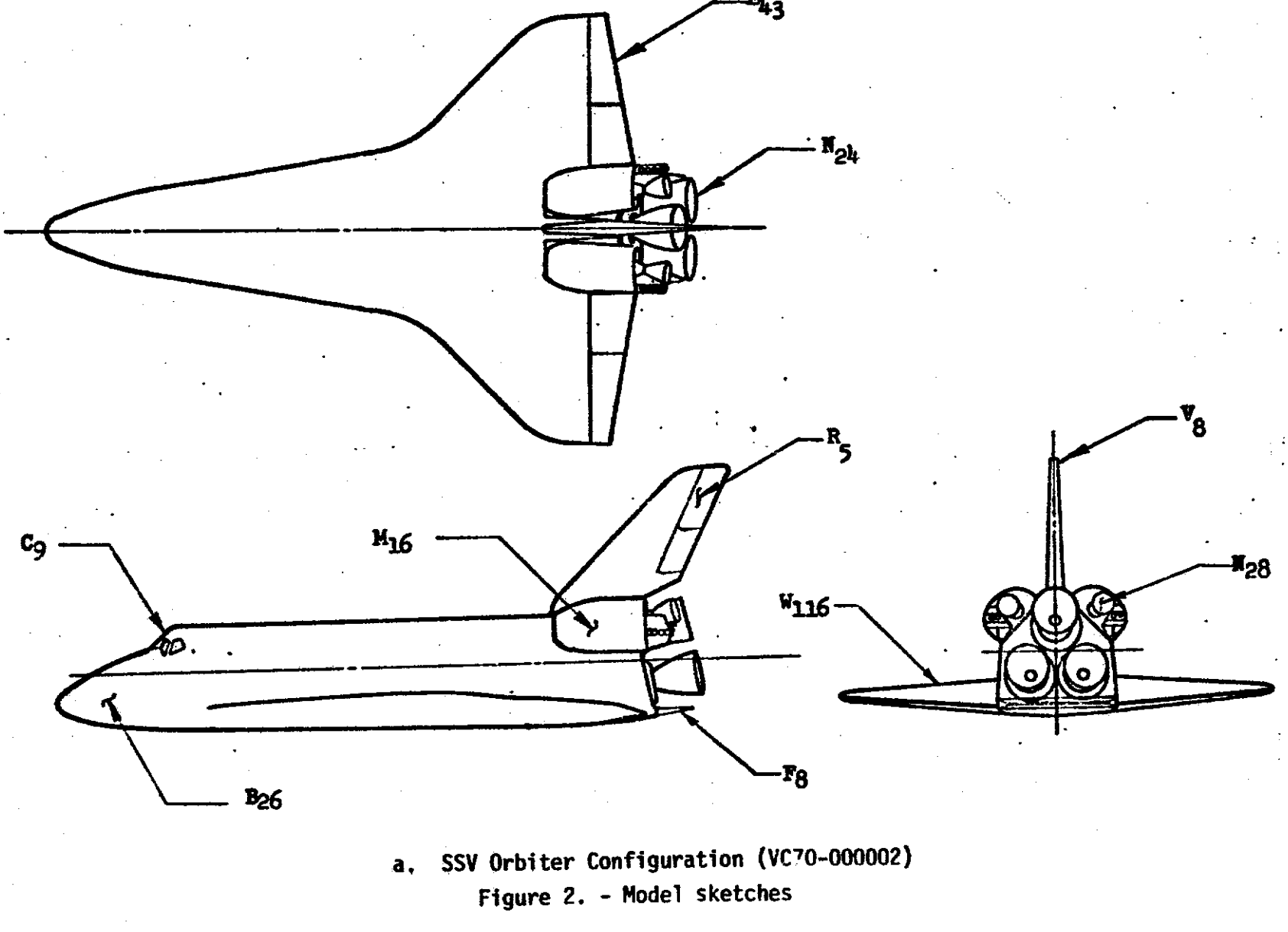

a. SSV Orbiter Configuration (VC70-000002)

Figure 2. - Model sketches

REFERENCE DIMENSIONS (FS)

	ORBITER	747 CARRIER
WING AREA ~ Ft^2	2690	5500
MAC ($\bar{c}$) ~ INCHES	474.81	327.78
SPAN (b) ~ INCHES	936.68	2348.04
MOMENT REFERENCE CENTER	67.5% LB	25.0 % $\bar{C}$
F.S. ~ INCHES	1109.0	1339.9
W.P. ~ INCHES	375.0	190.8

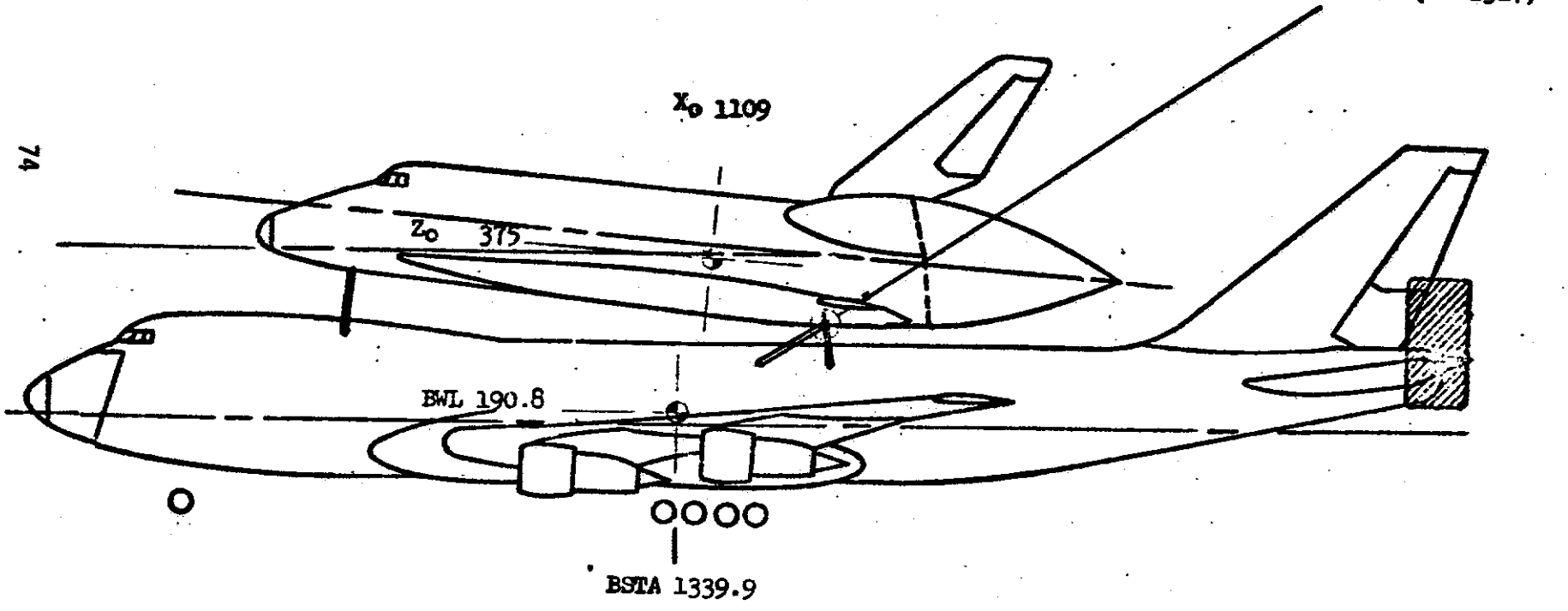

b. Orbiter/747 Flight Test Configurations

Figure 2. - Continued.

ORIGINAL PAGE IS
OF POOR QUALITY

c. Base Pressure Locations

Figure 2. - Continued.

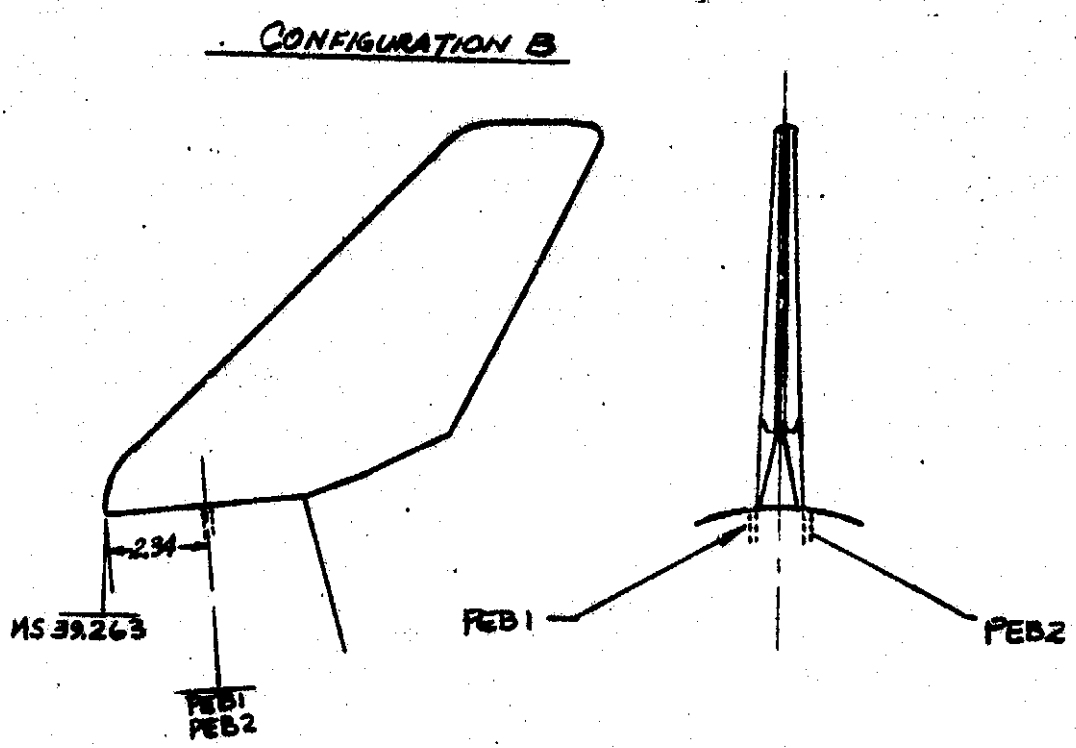

d. Blade Strut and Vertical Tail Pressure Locations

Figure 2. - Continued.

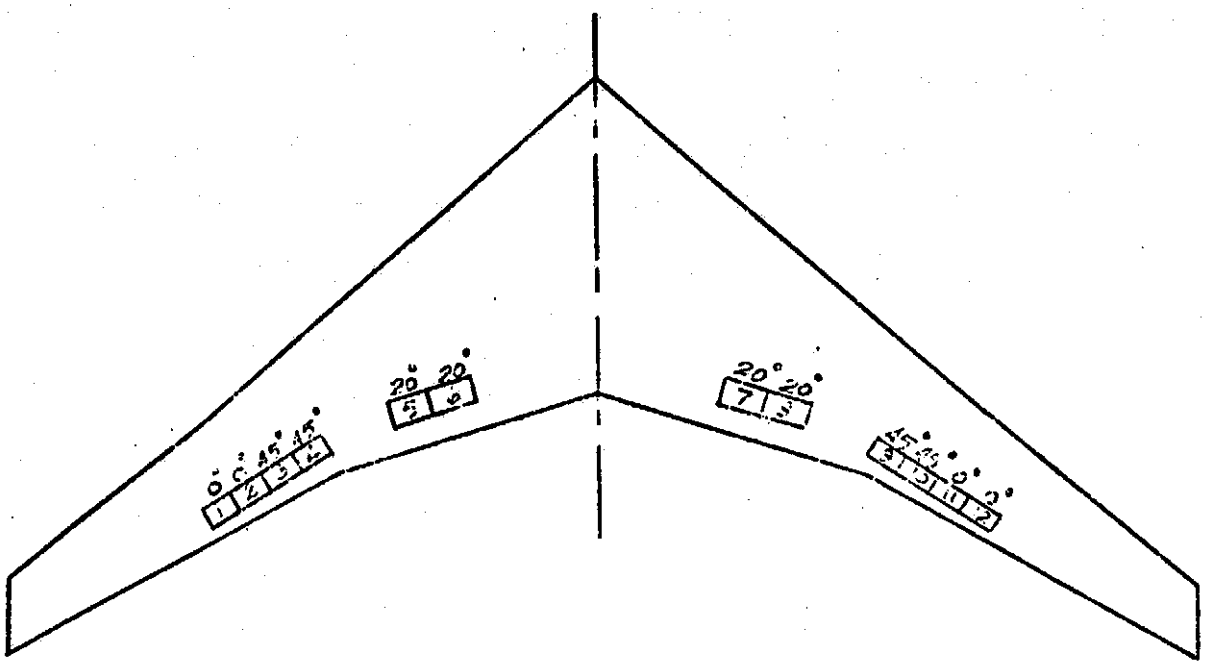

e. Standard In-Flight Speed-Brake

Figure 2. - Continued.

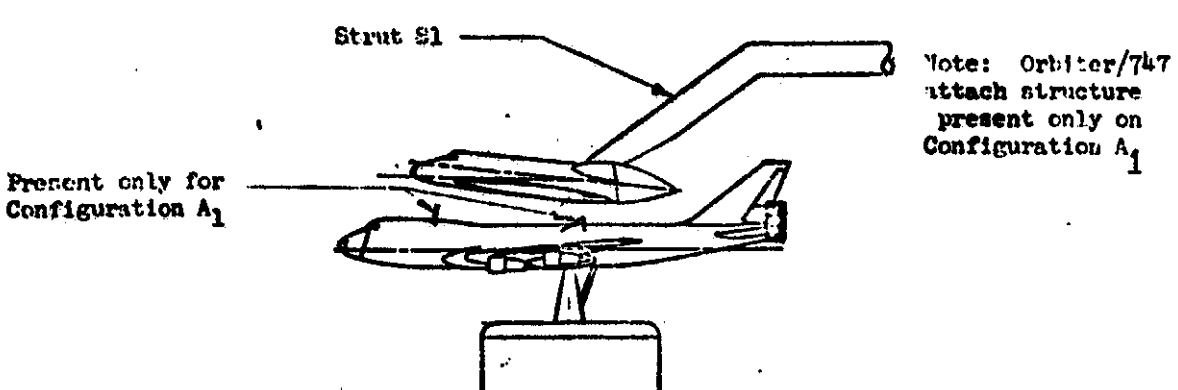

CONFIGURATION A

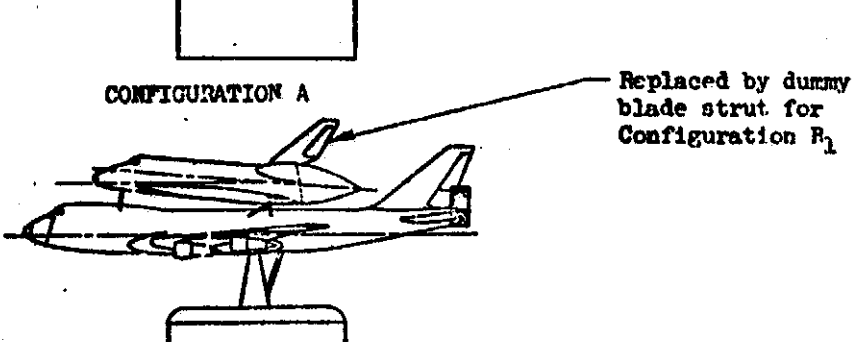

CONFIGURATION B

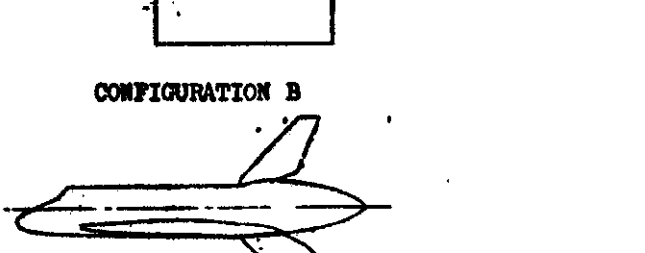

CONFIGURATION C

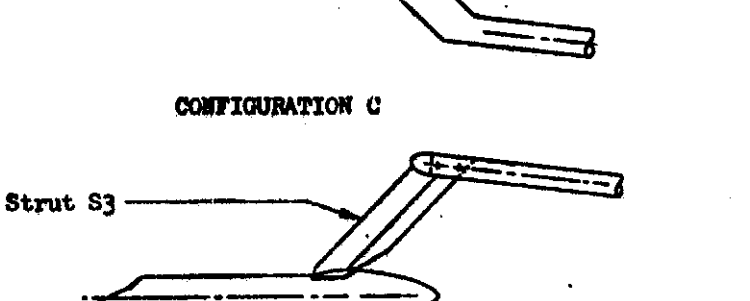

ORIGINAL PAGE IS OF POOR QUALITY

CONFIGURATION D

f. Test Support Configurations

Figure 2. - Continued.

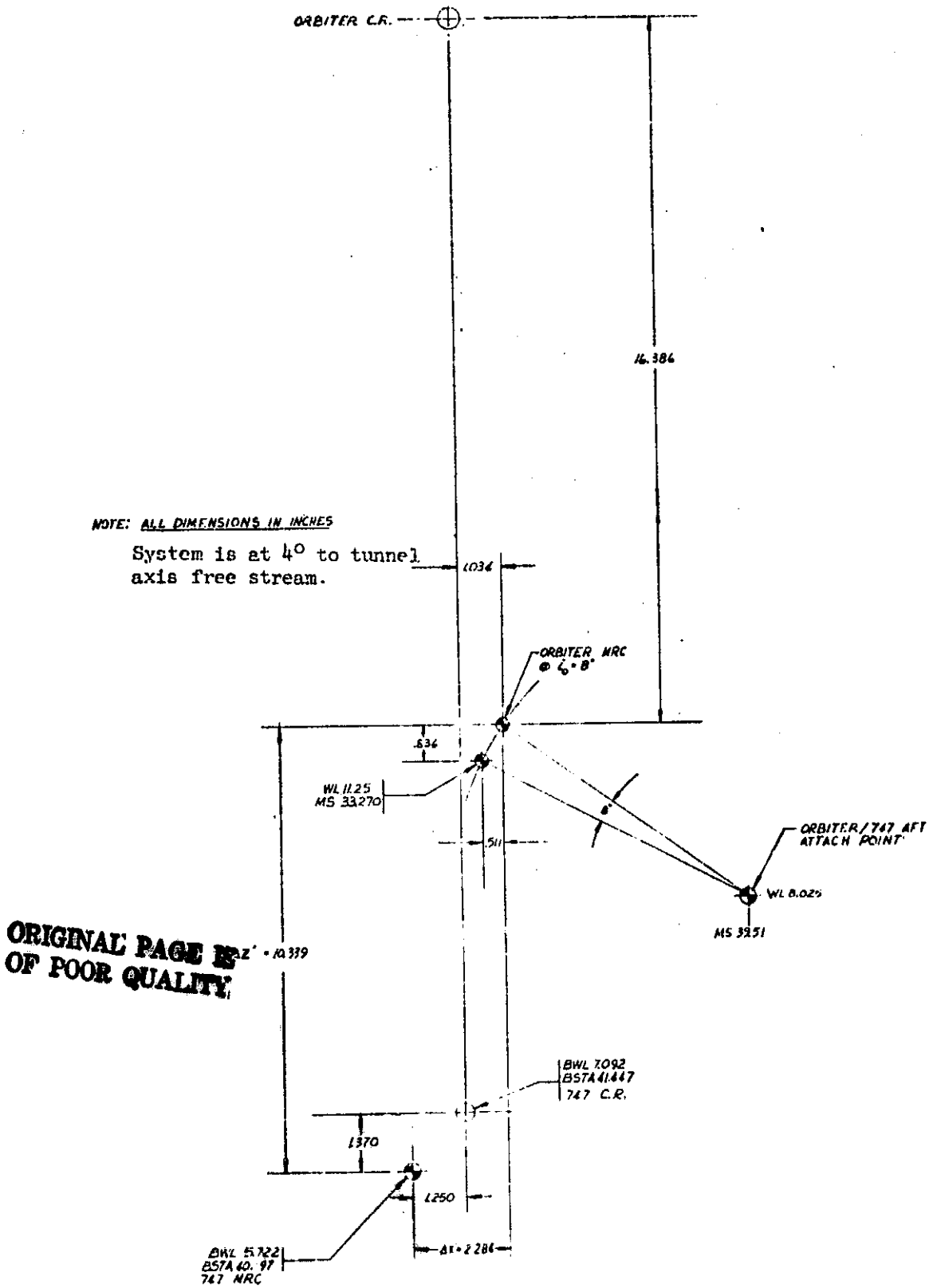

ORIGINAL PAGE IS
OF POOR QUALITY

g. Orbiter/747 C.G. and C.R. Orientation

Figure 2. - Concluded.

ORIGINAL PAGE IS
OF POOR QUALITY

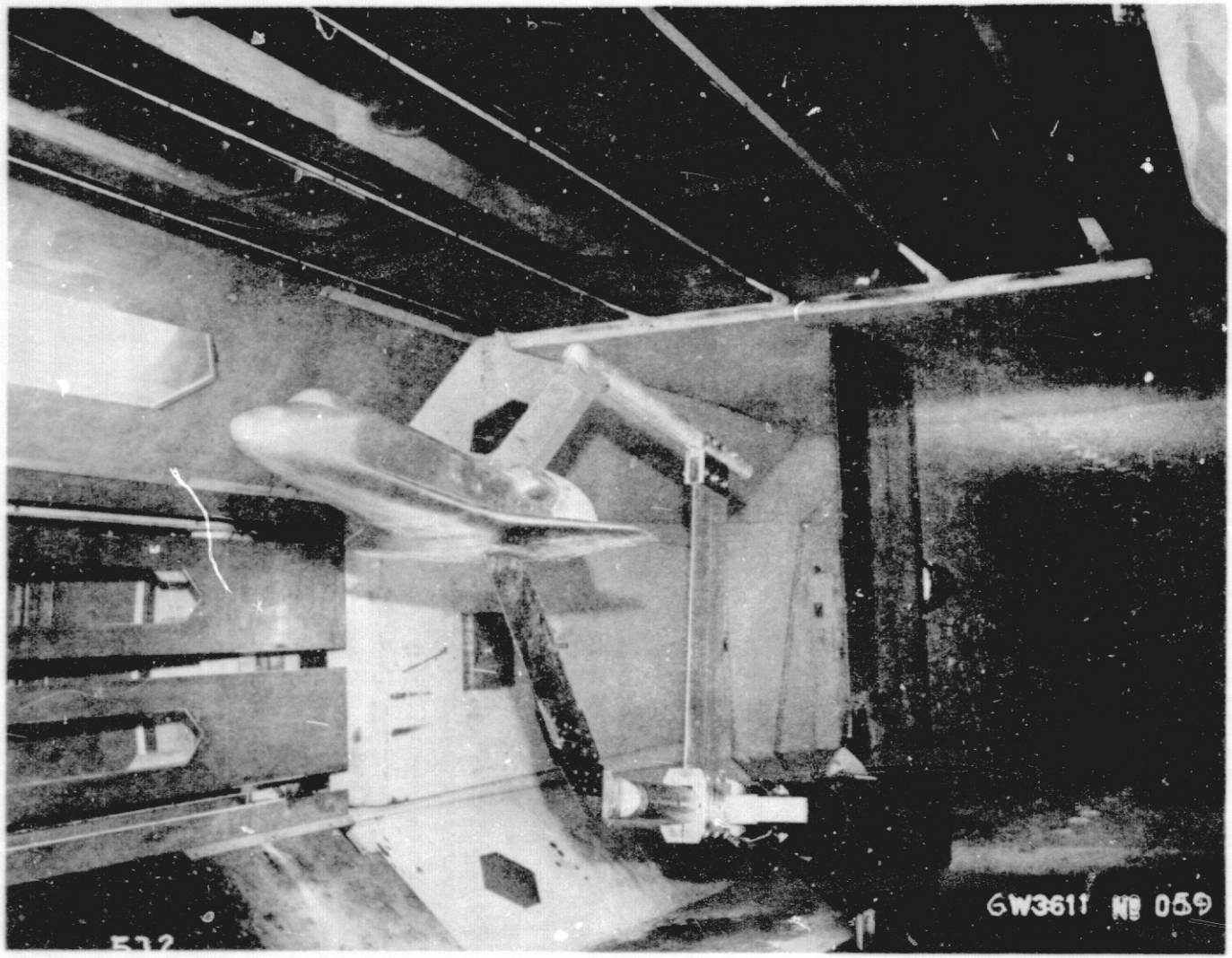

a. Orbiter Alone with Dummy Blade in Proximity for Sting Tare Effect Study

Figure 3. - Model photographs.

ORIGINAL PAGE IS
OF POOR QUALITY

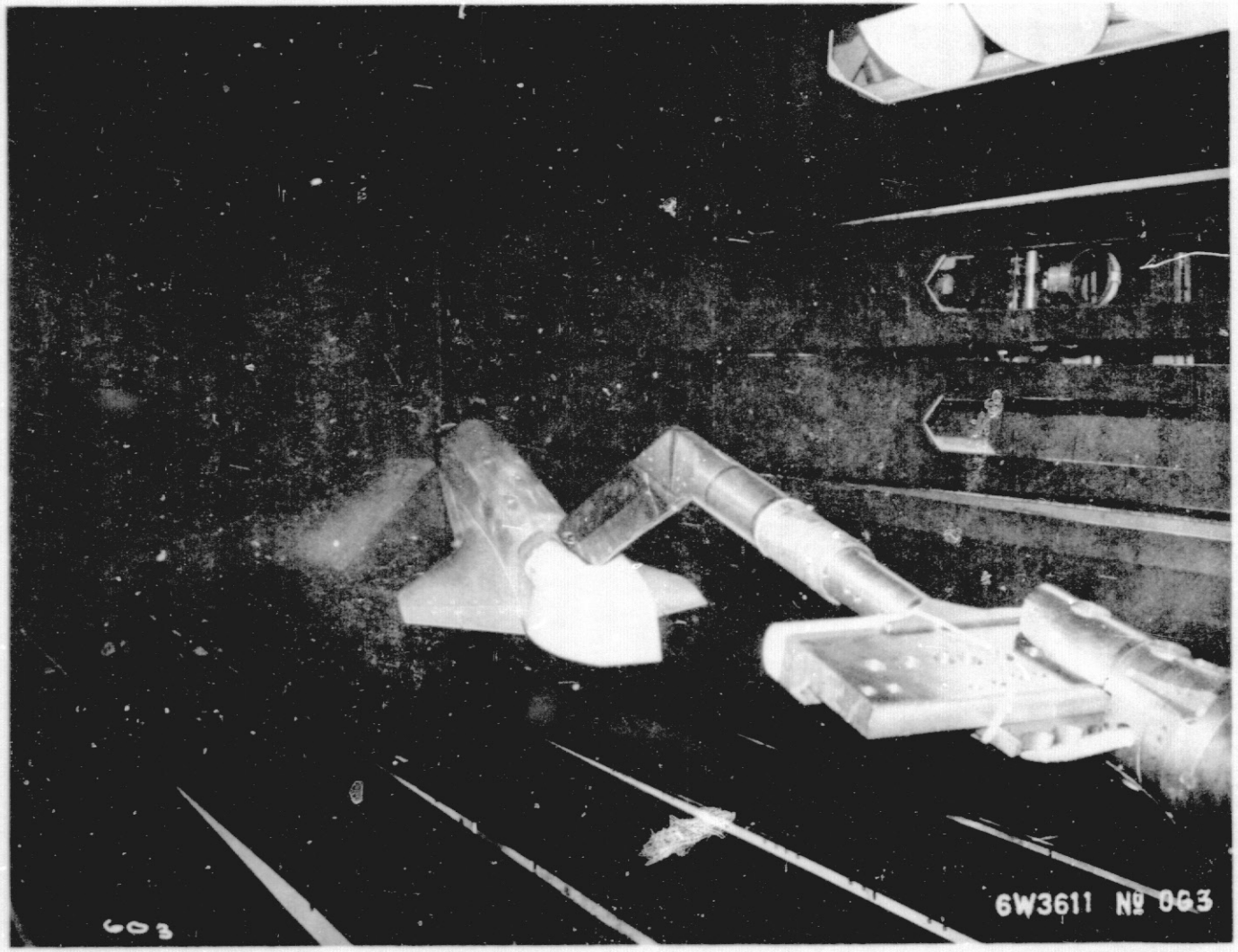

b. Orbiter Alone with Tail Cone $TC_{5.1}$

Figure 3. - Continued.

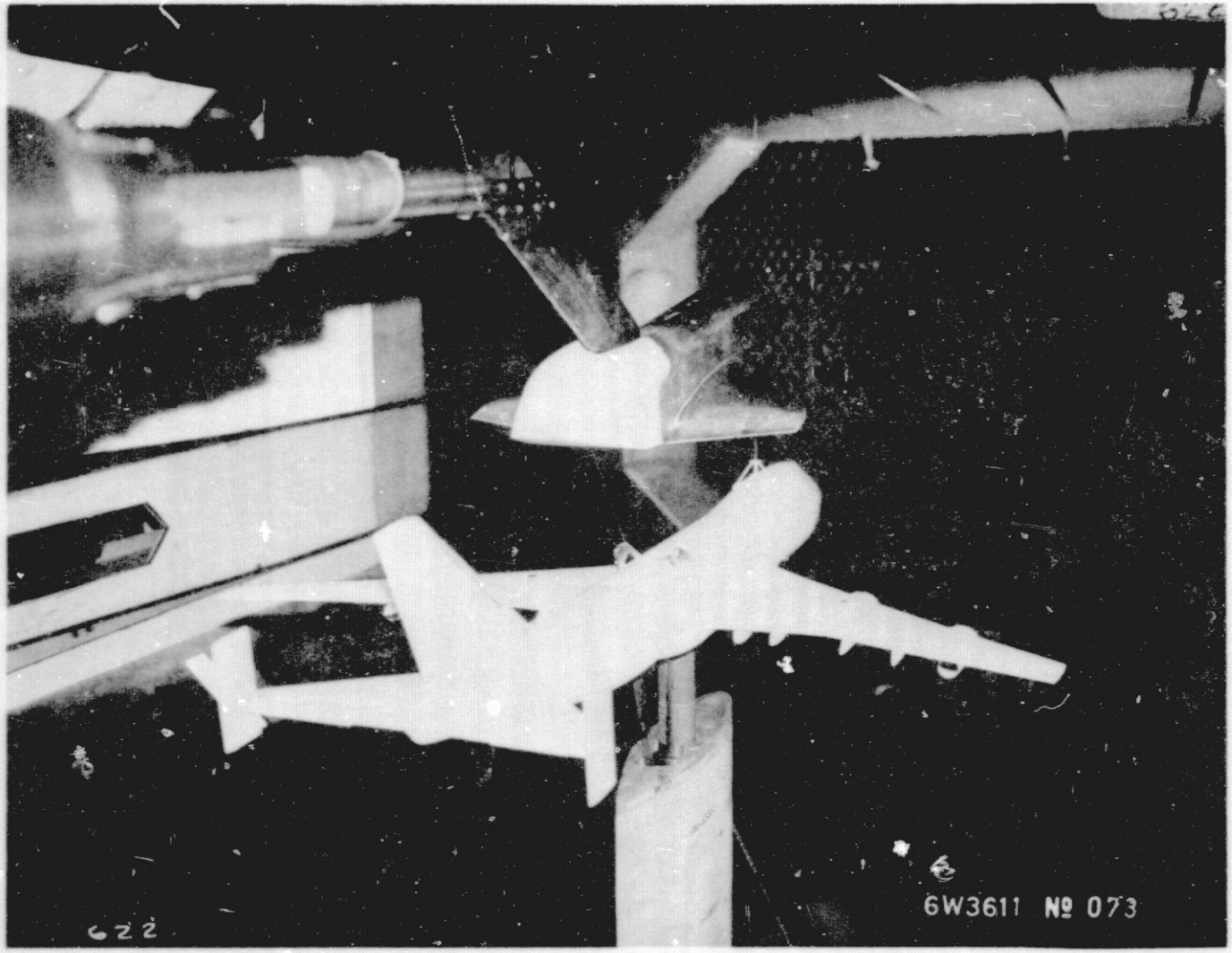

c. Aft View of the Orbiter/747 Showing Vertical Displacement

Figure 3. - Continued.

ORIGINAL PAGE IS
OF POOR QUALITY

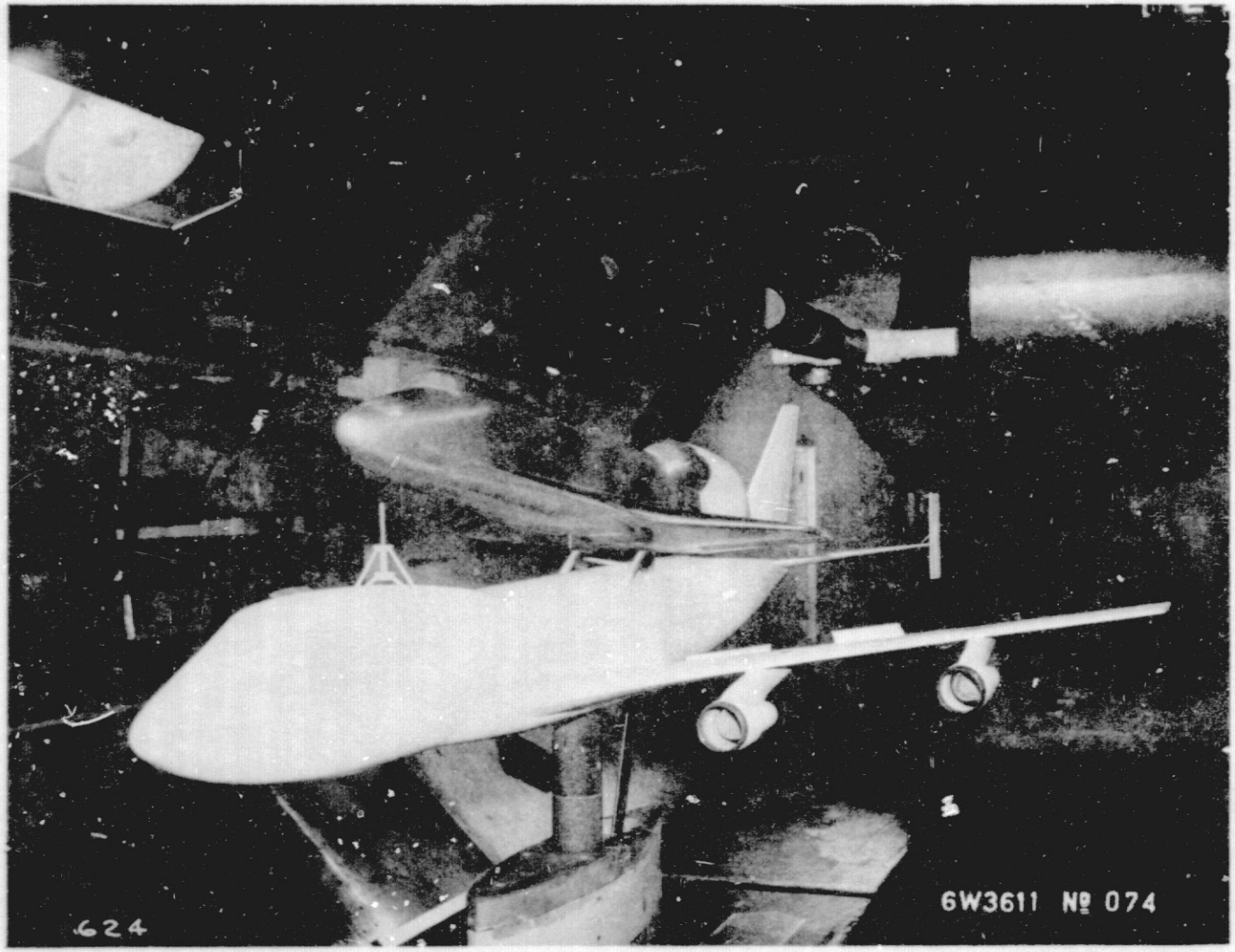

d. Front View of the Orbiter at an Angle of Attack with Respect to the 747 Carrier

Figure 3. - Concluded.

APPENDIX

TABULATED SOURCE DATA

VOLUME 3 Pages 1-1021

Tabulations of plotted data are available on request from Data Management Services

PRECEDING PAGE BLANK NOT FILMED

CA20 747/1 CARRIER DATA (RGN034) (01 DEC 75)

REFERENCE DATA

SREF = 5500.0000 SQ.FT. XMRP = 1339.9000 IN.XC
LREF = 327.7800 IN. YMRP = .0000 IN.YC
BREF = 2348.0400 IN. ZMRP = 190.8000 IN.ZC
SCALE = .0300

PARAMETRIC DATA

BETAC = -5.000 ELV-IB = .000
ELV-OB = 3.000 RUD-U = .000
RUD-L = .000 RUD747 = .000

RUN NO. 853/ 0 RN/L = 3.27 GRADIENT INTERVAL = -1.00/ 5.00

MACH	ALPHAW	BETA	Q(PSF)	CL	CD	CLM	CY	CLN	CSL
.600	-.081	-4.96130	422.25450	.01540	.09160	.06220	.10230	-.02480	.01200
.600	1.898	-4.96240	422.74870	.19800	.08680	.00450	.09740	-.02380	.01220
.601	3.842	-4.97080	423.24130	.37040	.08780	-.04260	.09500	-.02300	.01340
.599	5.788	-4.97170	421.49410	.54460	.09360	-.08010	.09230	-.02190	.01440
.600	7.724	-4.97240	422.61340	.71770	.11040	-.10200	.08820	-.02010	.01540
.600	9.637	-4.97030	422.36310	.88780	.15230	-.10620	.08870	-.02040	.01400
.601	11.602	-4.95960	422.73930	1.01190	.20950	-.11660	.09010	-.02090	.01390
.600	13.552	-4.96630	422.11910	1.07440	.26540	-.16030	.08700	-.01950	.01130
	GRADIENT	-.00242	.25158	.09051	-.00097	-.02673	-.00186	.00046	.00036

CA20 747/1 CARRIER DATA (RGN035) (01 DEC 75)

REFERENCE DATA

SREF = 5500.0000 SQ.FT. XMRP = 1339.9000 IN.XC
LREF = 327.7800 IN. YMRP = .0000 IN.YC
BREF = 2348.0400 IN. ZMRP = 190.8000 IN.ZC
SCALE = .0300

PARAMETRIC DATA

BETAC = .000 ELV-IB = .000
ELV-OB = 3.000 RUD-U = .000
RUD-L = .000 RUD747 = .000

RUN NO. 852/ 0 RN/L = 3.31 GRADIENT INTERVAL = -1.00/ 5.00

MACH	ALPHAW	BETA	Q(PSF)	CL	CD	CLM	CY	CLN	CSL
.600	.000	-.00110	422.49690	.01330	.09640	.08300	-.00730	.00180	.00020
.600	1.947	.00640	422.00320	.19500	.09230	.01890	-.00720	.00180	.00010
.600	3.860	.00650	422.12380	.36920	.09330	-.03590	-.00820	.00180	.00000
.600	5.828	-.00140	421.87220	.55060	.09950	-.08390	-.01030	.00220	-.00050
.600	7.852	-.00070	421.74720	.73050	.11610	-.10770	-.01060	.00240	.00000
.599	9.685	.00100	421.61910	.88000	.16180	-.08020	-.01170	.00290	-.00020
.600	11.561	.01150	422.49060	1.00630	.21380	-.09780	-.01000	.00230	-.00080
	GRADIENT	.00197	-.09712	.09221	-.00081	-.03081	-.00023	.00000	-.00005

ORIGINAL PAGE IS
OF POOR QUALITY

CA20 747/1 CARRIER DATA (RGN036) (01 DEC 75)

REFERENCE DATA

SREF =	5500.0000 SQ.FT.	XMRP =	1339.9000 IN.XC		
LREF =	327.7800 IN.	YMRP =	.0000 IN.YC		
BREF =	2348.0400 IN.	ZMRP =	190.8000 IN.ZC		
SCALE =	.0300				

PARAMETRIC DATA

BETAC =	5.000	ELV-1B =	.000
ELV-0B =	3.000	RUD-U =	.000
RUD-L =	.000	RUD747 =	.000

RUN NO. 854/ 0 RN/L = 3.27 GRADIENT INTERVAL = -1.00/ 5.00

MACH	ALPHAW	BETA	Q(PSF)	CL	CD	CLM	CY	CLN	CSL
.600	-.083	4.99490	421.87520	.01970	.09070	.05420	-.12580	.03060	-.01310
.600	1.884	4.99510	422.00020	.20160	.08620	-.00630	-.12290	.03020	-.01340
.600	3.844	4.99720	421.87070	.37460	.08730	-.05150	-.11740	.02800	-.01420
.601	5.798	4.99920	422.86520	.55070	.09390	-.08400	-.11340	.02630	-.01510
.600	7.700	5.00160	422.24030	.72350	.10980	-.11300	-.10930	.02450	-.01610
.600	9.668	4.99550	422.61300	.89390	.15580	-.12760	-.11110	.02510	-.01240
.600	11.584	4.99800	422.36780	1.01550	.20930	-.13140	-.11040	.02500	-.01420
	GRADIENT	.00059	-.00110	.09038	-.00087	-.02692	.00214	-.00066	-.00028

CA20 747/1 01 S1 CARRIER DATA (RGN037) (01 DEC 75)

REFERENCE DATA

SREF =	5500.0000 SQ.FT.	XMRP =	1339.9000 IN.XC		
LREF =	327.7800 IN.	YMRP =	.0000 IN.YC		
BREF =	2348.0400 IN.	ZMRP =	190.8000 IN.ZC		
SCALE =	.0300				

PARAMETRIC DATA

ALPHAC =	4.000	BETAC =	.000
ELV-1B =	.000	ELV-0B =	3.000
ELEVON =	5.000	BETAD =	.000
PHI =	.000	DX =	.000
DY =	.000	DZ =	7.500

RUN NO. 851/ 0 RN/L = 3.29 GRADIENT INTERVAL = .00/ 12.00

MACH	ALPHAO	ALPHAW	BETA	DY	DZ	CL	CD	CLM	CY	CLN	CSL
.599	6.201	5.79870	-.00750	-.00860	3.87780	.46680	.10320	-.06330	-.00810	.00070	.00050
.599	8.330	5.80870	-.00760	-.00950	4.90820	.43370	.09960	.00720	-.00840	.00070	.00040
.601	10.305	5.82640	-.01540	-.00530	4.94490	.39840	.09590	.04670	-.00830	.00060	.00060
.600	12.627	5.83870	-.00780	-.01080	6.77120	.35900	.09150	.10480	-.00850	.00060	.00070
.601	14.759	5.85010	-.00830	-.00640	8.42520	.32120	.08780	.14780	-.00880	.00100	.00070
.601	16.873	5.86800	-.01570	.00580	9.60390	.27880	.08170	.21460	-.00810	.00030	.00070
.600	18.983	5.88360	-.03110	.00690	10.63750	.23690	.07660	.28820	-.00730	.00000	.00050
	GRADIENT	.00672	-.00190	.00079	.26292	-.01665	-.00178	.02680	-.00005	-.00002	.00002

CA20 747/1 01 S1 CARRIER DATA (RGN038) (01 DEC 75)

REFERENCE DATA

SREF =	5500.0000 SQ.FT.	XMRP =	1339.9000 IN.XC		
LREF =	327.7800 IN.	YMRP =	.0000 IN.YC		
BREF =	2348.0400 IN.	ZMRP =	190.8000 IN.ZC		
SCALE =	.0300				

PARAMETRIC DATA

ALPHAC =	4.000	ELV-IB =	.000
ELV-OB =	3.000	ELEVON =	5.000
ALPHAO =	10.000	BETAO =	.000
PHI =	.000	DX =	.000
DY =	.000	DZ =	7.500

RUN NO. 850/ 0 RN/L = 3.33 GRADIENT INTERVAL = -5.00/ 5.00

MACH	BETA	ALPHAW	ALPHAO	DY	DZ	CL	CD	CLM	CY	CLN	CSL
.600	-9.976	5.80870	10.41260	2.12860	6.26880	.44000	.08640	-.05760	.20760	-.04350	.03010
.600	-6.964	5.81360	10.41330	1.49020	6.26810	.42020	.08830	-.02130	.14340	-.03260	.02270
.599	-4.978	5.81900	10.41450	1.06520	6.27000	.40700	.09100	.01080	.10070	-.02350	.01650
.600	-3.007	5.82670	10.41830	.64080	6.29770	.40040	.09340	.03320	.05880	-.01510	.00960
.600	-1.992	5.82550	10.41950	.42100	6.27660	.39830	.09460	.03560	.03680	-.01030	.00640
.600	-1.008	5.82610	10.42220	.20930	6.31260	.39820	.09590	.04290	.01230	-.00410	.00310
.601	.007	5.82360	10.41790	-.00900	6.24410	.40020	.09650	.04410	-.01160	.00190	.00000
.600	1.014	5.82620	10.41990	-.22960	6.27750	.40060	.09630	.04580	-.03350	.00740	-.00300
.600	2.013	5.82370	10.42220	-.44470	6.28800	.40210	.09540	.03950	-.05640	.01330	-.00630
.600	2.989	5.82490	10.42000	-.65700	6.27060	.40610	.09400	.02970	-.07950	.01860	-.00920
.600	4.984	5.81950	10.41820	-1.08590	6.26940	.41610	.09130	.00940	-.11970	.02570	-.01540
.601	9.990	5.81220	10.41490	-2.15500	6.26180	.44870	.08580	-.04900	-.22470	.04440	-.02780
	GRADIENT	-.00008	.00034	-.21609	-.00125	.00093	.00007	-.00019	-.02247	.00521	-.00318

CA20 747/1 01 S1 CARRIER DATA (RGN039) (01 DEC 75)

REFERENCE DATA

SREF =	5500.0000 SQ.FT.	XMRP =	1339.9000 IN.XC		
LREF =	327.7800 IN.	YMRP =	.0000 IN.YC		
BREF =	2348.0400 IN.	ZMRP =	190.8000 IN.ZC		
SCALE =	.0300				

PARAMETRIC DATA

ALPHAC =	4.000	ELV-IB =	.000
ELV-OB =	3.000	ELEVON =	5.000
ALPHAO =	10.000	BETAO =	.000
PHI =	.000	DX =	.000
DY =	10.000	DZ =	7.500

RUN NO. 848/ 0 RN/L = 3.35 GRADIENT INTERVAL = -5.00/ 5.00

MACH	BETA	ALPHAW	ALPHAO	DY	DZ	CL	CD	CLM	CY	CLN	CSL
.599	-9.977	5.80370	10.40880	11.96970	6.35950	.43960	.09010	-.09540	.18640	-.04120	.03538
.599	-6.964	5.81260	10.41720	11.42280	6.42840	.42100	.09090	-.06090	.12680	-.03240	.02780
.600	-5.008	5.81530	10.42300	11.04220	6.43340	.41510	.09380	-.04090	.08510	-.02370	.02210
.599	-3.000	5.81870	10.42860	10.63430	6.45000	.40830	.09600	-.01160	.04120	-.01430	.01580
.600	-2.007	5.81990	10.42910	10.42340	6.44280	.40630	.09690	.00100	.02110	-.01000	.01260
.599	-1.006	5.82050	10.43390	10.20700	6.42870	.40590	.09750	.01290	.00050	-.00560	.00940
.600	.025	5.82110	10.43310	9.98250	6.43900	.40570	.09820	.02440	-.01920	-.00150	.00620
.600	1.019	5.82140	10.43540	9.76020	6.45990	.40600	.09820	.03300	-.03600	.00180	.00310
.600	2.013	5.82190	10.43740	9.53270	6.43400	.40560	.09770	.03580	-.05460	.00530	.00000
.599	2.991	5.82180	10.43940	9.30670	6.43310	.40700	.09660	.04000	-.07390	.00930	-.00280
.599	5.113	5.82040	10.44710	8.80200	6.44050	.41370	.09290	.03770	-.12150	.02050	-.00890
.600	9.990	5.81320	10.47550	7.59500	6.48930	.44060	.08310	-.00740	-.23220	.04400	-.02210
	GRADIENT	.00051	.00180	-.22151	-.00131	-.00019	.00015	.00873	-.01902	.00388	-.00311

CA20 747/0 01 S1 AT38 AT39 CARRIER DATA (RGN040) (01 DEC 75)

REFERENCE DATA

SREF =	5500.0000 SQ.FT.	XMRP =	1339.9000 IN.XC		
LREF =	327.7800 IN.	YMRP =	.0000 IN.YC		
BREF =	2348.0400 IN.	ZMRP =	190.8000 IN.ZC		
SCALE =	.0300				

PARAMETRIC DATA

ALPHAC =	.000	BETAC =	.000
ELV-IB =	.000	ELV-OB =	3.000
ELEVON =	5.000	MACH =	.600
BETAO =	.000	PHI =	.000
DX =	.000	DY =	.000

RUN NO. 619/ 0 RN/L = 3.37 GRADIENT INTERVAL = -1.00/ 4.00

ALPHAO	DZ	MACH	DX	DY	BETAO	PHI	ALPHAW	BETA	CL	CD	CLM
8.543	1.907	.59950	3.60120	-.03230	.01640	.00000	1.94510	.05340	.17540	.08100	.17980
8.536	4.848	.60050	3.59700	-.02820	.01400	.00000	1.94340	.05390	.18630	.08210	.17020
8.531	9.288	.59950	3.59490	-.02610	.01230	.00000	1.94340	.05390	.18630	.08210	.17020
8.529	17.091	.59980	3.59790	-.02240	.00940	.00000	1.92880	.06010	.22620	.08520	.11440
8.525	31.807	.59930	3.60800	-.01480	.00500	.00000	1.91450	.05980	.25860	.08640	.07040
8.523	36.614	.60000	3.61500	-.01210	.00510	.00000	1.91010	.05200	.26430	.08680	.06190
	GRADIENT	.00000	.00000	.00000	.00000	.00000	.00000	.00000	.00000	.00000	.00000

CA20 747/0 01 S1 AT38 A139 CARRIER DATA (RGN041) (01 DEC 75)

REFERENCE DATA

SREF = 5500.0000 SQ.FT. XMRP = 1339.9000 IN.XC
LREF = 327.7800 IN. YMRP = .0000 IN.YC
BREF = 2348.0400 IN. ZMRP = 190.8000 IN.ZC
SCALE = .0300

PARAMETRIC DATA

ALPHAC = 4.000 BETAC = .000
ELV-IB = .000 ELV-OB = 3.000
ELEVON = 5.000 MACH = .600
BETAO = .000 PHI = .000
DX = .000 DY = .000

RUN NO. 621/ 0 RN/L = 3.27 GRADIENT INTERVAL = -1.00/ 4.00

ALPHAO	DZ	MACH	DX	DY	BETAO	PHI	ALPHAW	BETA	CL	CD	CLM
12.656	.965	.59940	-.06780	-.01860	.00680	.00000	5.83310	.06160	.46440	.08340	.10590
12.650	4.780	.59960	-.33520	-.01570	.00350	.00000	5.82950	.06890	.48140	.08620	.10080
12.648	8.551	.59960	-.59320	-.01060	.00330	.00000	5.82270	.04540	.50030	.08880	.07380
12.651	15.655	.60020	-1.07500	-.00980	.00120	.00000	5.81040	.05270	.52760	.09180	.03800
12.672	30.855	.60070	-2.11910	-.00380	-.00410	.00000	5.79490	.06010	.57010	.09500	-.01170
12.678	45.578	.60050	-3.13100	-.00250	-.00480	.00000	5.78510	.06010	.59690	.09590	-.03890
12.678	60.229	.59990	-4.14410	.01270	-.01300	.00000	5.77850	.05240	.61460	.09640	-.05940
	GRADIENT	.00000	.00000	.00000	.00000	.00000	.00000	.00000	.00000	.00000	.00000

CA20 747/0 01 S1 AT38 AT39 CARRIER DATA (RGN042) (01 DEC 75)

REFERENCE DATA

SREF = 5500.0000 SQ.FT. XMRP = 1339.9000 IN.XC
LREF = 327.7800 IN. YMRP = .0000 IN.YC
BREF = 2348.0400 IN. ZMRP = 190.8000 IN.ZC
SCALE = .0300

PARAMETRIC DATA

ALPHAC = 8.000 BETAC = .000
ELV-IB = .000 ELV-OB = 3.000
ELEVON = 5.000 MACH = .600
BETAO = .000 PHI = .000
DX = .000 DY = .000

RUN NO. 620/ 0 RN/L = 3.33 GRADIENT INTERVAL = -1.00/ 4.00

ALPHAO	DZ	MACH	DX	DY	BETAO	PHI	ALPHAW	BETA	CL	CD	CLM
16.829	3.116	.59950	-2.43120	-.02120	.00530	.00000	9.76940	.03940	.72530	.12740	.03230
16.828	6.039	.59960	-2.83530	-.01980	.00420	.00000	9.76310	.05540	.73740	.13140	.02920
16.849	18.388	.60060	-4.53450	-.00890	.00070	.00000	9.74570	.06220	.78700	.14130	-.01820
16.864	32.988	.60080	-6.55190	.00410	-.00220	.00000	9.73110	.06210	.82790	.14770	-.05780
16.870	48.151	.59930	-8.63310	.01220	-.00550	.00000	9.72170	.05490	.85440	.15180	-.07820
16.886	63.071	.59990	-10.74270	.02870	-.01480	.00000	9.71610	.06290	.87040	.15520	-.08870
	GRADIENT	.00000	.00000	.00000	.00000	.00000	.00000	.00000	.00000	.00000	.00000

CA20 747/0 01 S1 AT38 AT39 CARRIER DATA (RGN043) (01 DEC 75)

REFERENCE DATA

SREF =	5500.0000 SQ.FT.	XMRP =	1339.9000 IN.XC		
LREF =	327.7800 IN.	YMRP =	.0000 IN.YC		
BREF =	2348.0400 IN.	ZMRP =	190.8000 IN.ZC		
SCALE =	.0300				

PARAMETRIC DATA

ALPHAC =	4.000	BETAC =	-5.000
ELV-1B =	.000	ELV-0B =	3.000
ELEVON =	5.000	MACH =	.600
BETAO =	-5.000	PHI =	.000
DX =	.000	DY =	.000

RUN NO. 622/ 0 RN/L = 3.34 GRADIENT INTERVAL = -1.00/ 4.00

ALPHAO	DZ	MACH	DX	DY	BETAO	PHI	ALPHAW	BETA	CL	CD	CLM
12.644	1.130	.59920	-.11230	1.40980	-5.21950	.00000	5.83690	-4.98500	.46350	.08020	.09370
12.623	4.337	.59930	-.33720	1.40240	-5.22240	.00000	5.82570	-4.97960	.48720	.08180	.07410
12.617	8.510	.59940	-.62560	1.42200	-5.22820	.00000	5.82070	-4.98110	.50730	.08450	.04660
12.618	16.134	.59970	-1.14280	1.44840	-5.23870	.00000	5.80320	-4.98220	.53660	.08750	.01000
12.630	31.004	.59900	-2.16520	1.47370	-5.24900	.00000	5.79220	-4.98470	.57340	.09020	-.02970
12.635	46.251	.59950	-3.21640	1.48210	-5.25230	.00000	5.78510	-4.97510	.59890	.09090	-.05190
12.636	60.055	.59910	-4.17150	1.48950	-5.25550	.00000	5.77980	-4.96250	.61330	.09110	-.06580
	GRADIENT	.00000	.00000	.00000	.00000	.00000	.00000	.00000	.00000	.00000	.00000

CA20 747/0 02 S1 AT38 AT39 CARRIER DATA (RGN044) (01 DEC 75)

REFERENCE DATA

SREF =	5500.0000 SQ.FT.	XMRP =	1339.9000 IN.XC		
LREF =	327.7800 IN.	YMRP =	.0000 IN.YC		
BREF =	2348.0400 IN.	ZMRP =	190.8000 IN.ZC		
SCALE =	.0300				

PARAMETRIC DATA

ALPHAC =	4.000	BETAC =	-5.000
ELV-1B =	.000	ELV-0B =	3.000
ELEVON =	5.000	MACH =	.600
BETAO =	-5.000	PHI =	.000
DX =	.000	DY =	.000

RUN NO. 623/ 0 RN/L = 3.33 GRADIENT INTERVAL = -1.00/ 4.00

ALPHAO	DZ	MACH	DX	DY	BETAO	PHI	ALPHAW	BETA	CL	CD	CLM
12.689	1.078	.60000	-.11690	1.45730	-5.21700	.00000	5.83830	-4.98900	.45380	.08010	.08890
12.667	4.227	.60030	-.34250	1.45710	-5.21810	.00000	5.83370	-4.99230	.47830	.08260	.06980
12.664	8.517	.60080	-.63820	1.47060	-5.22580	.00000	5.82500	-4.98420	.50220	.08510	.03740
12.67.	16.093	.60020	-1.16010	1.48740	-5.23480	.00000	5.81380	-4.97680	.53270	.08770	.00300
12.680	31.112	.59970	-2.19170	1.51140	-5.24470	.00000	5.79960	-4.97500	.57130	.09010	-.03590
12.697	46.160	.60010	-3.22910	1.51770	-5.24610	.00000	5.78840	-4.97470	.59600	.09110	-.05590
12.700	60.200	.59940	-4.20270	1.52760	-5.24940	.00000	5.78270	-4.98230	.61160	.09150	-.06890
	GRADIENT	.00000	.00000	.00000	.00000	.00000	.00000	.00000	.00000	.00000	.00000

ORIGINAL PAGE IS
OF POOR QUALITY

CA20 747/1 01 S1 AT38 AT39 CARRIER DATA (RGN045) (01 DEC 75)

REFERENCE DATA

SREF =	5500.0000 SQ.FT.	XMRP =	1339.9000 IN.XC
LREF =	327.7800 IN.	YMRP =	.0000 IN.YC
BREF =	2348.0400 IN.	ZMRP =	190.8000 IN.ZC
SCALE =	.0300		

PARAMETRIC DATA

ALPHAC =	.000	BETAC =	.000
ELV-IB =	.000	ELV-OB =	3.000
ELEVON =	5.000	MACH =	.600
BETAO =	.000	PHI =	.000
DX =	.000	DY =	.000

RUN NO. 627/ 0 RN/L = 3.23 GRADIENT INTERVAL = -1.00/ 4.00

ALPHAO	DZ	MACH	DX	DY	BETAO	PHI	ALPHAW	BETA	CL	CD	CLM
8.542	.714	.59990	3.63520	-.02480	.01080	.00000	2.00160	.04680	.03280	.09550	.22560
8.528	3.692	.59920	3.63100	-.02090	.00950	.00000	2.00010	.05430	.04330	.09670	.21100
8.518	8.066	.59980	3.63410	-.01440	.00730	.00000	1.99340	.04570	.05560	.09740	.19980
8.507	15.605	.59930	3.63780	-.01330	.00490	.00000	1.98550	.03310	.07650	.10000	.15690
8.501	30.694	.59970	3.64610	-.00330	-.00020	.00000	1.97170	.04490	.10750	.10150	.11020
8.493	36.458	.60030	3.64900	-.00250	-.00040	.00000	1.96870	.04470	.11570	.10170	.10130
	GRADIENT	-.00024	-.00141	.00131	-.00044	.00000	-.00050	.00252	.00353	.00040	-.00490

CA20 747/1 01 S1 AT38 AT39 CARRIER DATA (RGN046) (01 DEC 75)

REFERENCE DATA

SREF =	5500.0000 SQ.FT.	XMRP =	1339.9000 IN.XC
LREF =	327.7800 IN.	YMRP =	.0000 IN.YC
BREF =	2348.0400 IN.	ZMRP =	190.8000 IN.ZC
SCALE =	.0300		

PARAMETRIC DATA

ALPHAC =	4.000	BETAC =	.000
ELV-IB =	.000	ELV-OB =	3.000
ELEVON =	5.000	MACH =	.600
BETAO =	.000	PHI =	.000
DX =	.000	DY =	.000

RUN NO. 625/ 0 RN/L = 3.33 GRADIENT INTERVAL = -1.00/ 4.00

ALPHAO	DZ	MACH	DX	DY	BETAO	PHI	ALPHAW	BETA	CL	CD	CLM
12.932	1.832	.60070	-.18360	-.02470	.00710	.00000	5.90010	.05470	.32370	.09540	.14940
12.928	4.902	.60050	-.39970	-.02410	.00510	.00000	5.89670	.06970	.33370	.09690	.14590
12.919	9.333	.59970	-.70450	-.01890	.00490	.00000	5.89180	.04620	.35310	.10030	.11280
12.922	16.287	.60010	-1.18040	-.01810	.00320	.00000	5.88020	.05340	.37870	.10350	.07780
12.928	31.736	.59970	-2.24670	-.00760	-.00230	.00000	5.86670	.04510	.42190	.10640	.02740
12.931	46.536	.60010	-3.26590	-.00890	-.00240	.00000	5.85220	.06070	.44920	.10740	.00090
12.938	61.653	.59990	-4.32120	.00250	-.00900	.00000	5.84840	.05300	.46560	.10800	-.01800
	GRADIENT	.00000	.00000	.00000	.00000	.00000	.00000	.00000	.00000	.00000	.00000

CA20 747/1 01 S1 AT38 AT39 CARRIER DATA (RGN047) (01 DEC 75)

REFERENCE DATA

SREF = 5500.0000 SQ.FT. XMRP = 1339.9000 IN.XC
LREF = 327.7800 IN. YMRP = .0000 IN.YC
BREF = 2348.0400 IN. ZMRP = 190.8000 IN.ZC
SCALE = .0300

PARAMETRIC DATA

ALPHAC = 8.000 BETAC = .000
ELV-IB = .000 ELV-OB = 3.000
ELEVON = 5.000 MACH = .600
BETAO = .000 PHI = .000
DX = .000 DY = .000

RUN NO. 626/ 0 RN/L = 3.25 GRADIENT INTERVAL = -1.00/ 4.00

ALPHAO	DZ	MACH	DX	DY	BETAO	PHI	ALPHAW	BETA	CL	CD	CLM
16.841	.924	.60020	-2.09540	-.01670	.00380	.00000	9.78520	.04000	.62350	.12690	.06000
16.843	3.722	.60080	-2.48890	-.01030	.00240	.00000	9.78090	.03220	.63630	.12970	.05740
16.845	8.201	.60030	-3.10370	-.00870	.00200	.00000	9.77510	.04060	.65300	.13470	.04250
16.850	15.692	.59940	-4.13510	-.00210	-.00030	.00000	9.76470	.04690	.68230	.13870	.01610
16.865	30.700	.59980	-6.20900	.00960	-.00430	.00000	9.74940	.04650	.73200	.14560	-.02360
16.875	45.718	.59990	-8.29310	.01440	-.00560	.00000	9.73700	.04670	.76710	.15000	-.04500
16.891	61.155	.59980	-10.44360	.02570	-.01250	.00000	9.72920	.05480	.78930	.15370	-.05750
16.891	67.887	.59990	-11.37640	.03360	-.01550	.00000	9.72220	.04720	.79640	.15480	-.06040
16.891	75.245	.60070	-12.40620	.03680	-.01600	.00000	9.72200	.04730	.80370	.15610	-.06220
	GRADIENT	.00021	-.14064	.00229	-.00050	.00000	-.00154	-.00279	.00457	.00100	-.00093

CA20 747/1 01 S1 AT38 AT39 CARRIER DATA (RGN048) (01 DEC 75)

REFERENCE DATA

SREF = 5500.0000 SQ.FT. XMRP = 1339.9000 IN.XC
LREF = 327.7800 IN. YMRP = .0000 IN.YC
BREF = 2348.0400 IN. ZMRP = 190.8000 IN.ZC
SCALE = .0300

PARAMETRIC DATA

ALPHAC = 4.000 BETAC = -5.000
ELV-IB = .000 ELV-OB = 3.000
ELEVON = 5.000 MACH = .600
BETAO = -5.000 PHI = .000
DX = .000 DY = .000

RUN NO. 624/ 0 RN/L = 3.34 GRADIENT INTERVAL = -1.00/ 4.00

ALPHAO	DZ	MACH	DX	DY	BETAO	PHI	ALPHAW	BETA	CL	CD	CLM
12.701	.950	.60050	-.09170	1.42280	-5.22730	.00000	5.89270	-4.97770	.32290	.09250	.13700
12.684	4.036	.60000	-.31050	1.41650	-5.23070	.00000	5.88430	-4.97960	.34430	.09380	.10950
12.674	8.306	.59970	-.60550	1.43390	-5.23560	.00000	5.88040	-4.97320	.36130	.09640	.08540
12.674	15.805	.59980	-1.11840	1.48120	-5.24530	.00000	5.86640	-4.98130	.38710	.09930	.04800
12.679	30.896	.59900	-2.16020	1.48350	-5.25590	.00000	5.85530	-4.96770	.42400	.10160	.01120
12.680	45.974	.59940	-3.19910	1.49390	-5.25890	.00000	5.84400	-4.97330	.44850	.10210	-.01090
12.692	60.286	.60090	-4.18950	1.50010	-5.26240	.00000	5.83610	-4.97300	.46370	.10190	-.02150
	GRADIENT	.00000	.00000	.00000	.00000	.00000	.00000	.00000	.00000	.00000	.00000

DATE 01 DEC 75 TABULATED SOURCE DATA - CA20

CA20 747/1 01 SI CARRIER DATA (RGN049) (01 DEC 75)

REFERENCE DATA

SREF = 6500.0000 SQ.FT. XMRP = 1339.9000 IN.XC
LREF = 327.7800 IN. YMRP = .0000 IN.YC
BREF = 2348.0400 IN. ZMRP = 190.8000 IN.ZC
SCALE = .0300

PARAMETRIC DATA

ALPHAC =	.000	BETAC =	.000
ELV-IB =	.000	ELV-OB =	3.000
ELEVON =	5.000	MACH =	.600
BETAO =	.000	PHI =	.000
DX =	.000	DY =	.000

RUN NO. 631/ 0 RN/L = 3.24 GRADIENT INTERVAL = .00/ 12.00

ALPHAO	DZ	MACH	DX	DY	BETAO	PHI	ALPHAW	BETA	CL	CD	CLM
6.312	-1.419	.59920	5.29790	-.02660	.01260	.00000	1.98210	.05430	.08300	.09240	.12808
6.292	1.466	.59920	5.30150	-.02450	.01180	.00000	1.98020	.05190	.08250	.09300	.13910
6.279	6.074	.59910	5.30320	-.01630	.00880	.00000	1.97970	.04600	.09040	.09320	.13150
6.271	13.645	.59920	5.30920	-.01460	.00610	.00000	1.97080	.05290	.10790	.09420	.09950
6.270	16.388	.59950	5.30430	-.01130	.00540	.00000	1.97780	.04510	.11380	.09420	.09160
6.269	23.904	.60010	5.31460	-.00590	.00200	.00000	1.96400	.04490	.12610	.09440	.07290
	GRADIENT	-.00002	.00037	.00178	-.00065	.00000	-.00011	-.00345	.00171	.00004	-.00165

RUN NO. 628/ 0 RN/L = 3.29 GRADIENT INTERVAL = .00/ 12.00

ALPHAO	DZ	MACH	DX	DY	BETAO	PHI	ALPHAW	BETA	CL	CD	CLM
10.637	1.272	.59950	2.52450	-.01930	.00730	.00000	2.01030	.04640	.00250	.08320	.29310
10.614	3.983	.59910	2.52480	-.01980	.00740	.00000	2.00740	.05410	.01040	.08460	.27990
10.601	6.941	.59970	2.52560	-.01370	.00630	.00000	2.00440	.03840	.01860	.08550	.26700
10.592	9.629	.59960	2.52630	-.01580	.00590	.00000	2.00010	.04560	.03020	.08680	.24640
10.583	15.194	.60070	2.52960	-.01470	.00410	.00000	1.99100	.05300	.05440	.08940	.19730
10.585	20.698	.60030	2.53050	-.01350	.00330	.00000	1.97990	.05250	.07160	.09090	.16270
10.582	26.325	.60090	2.53340	-.00670	.00030	.00000	1.97440	.04490	.08630	.09190	.13860
10.568	31.999	.59990	2.53780	-.00630	-.00040	.00000	1.97230	.05230	.09780	.09240	.11790
10.560	37.416	.59910	2.53880	-.00650	.00000	.00000	1.96870	.05230	.10750	.09270	.10370
10.561	42.935	.60070	2.54520	-.00450	-.00060	.00000	1.96310	.05230	.11660	.09280	.09440
10.568	48.086	.59910	2.53990	-.00120	-.00220	.00000	1.96090	.04440	.12230	.09300	.08490
	GRADIENT	.00003	.00022	.00060	-.00019	.00000	-.00120	-.00068	.00325	.00042	-.00545

RUN NO. 630/ 0 RN/L = 3.25 GRADIENT INTERVAL = .00/ 12.00

ALPHAO	DZ	MACH	DX	DY	BETAO	PHI	ALPHAW	BETA	CL	CD	CLM
14.838	3.701	.59910	1.51970	.00250	.00170	.00000	2.03660	.03910	-.06320	.08000	.36210
14.820	6.608	.59920	1.51440	.00350	.00140	.00000	2.03470	.04660	-.05750	.08120	.36180
14.798	11.326	.60080	1.51090	.00280	.00070	.00000	2.02900	.05400	-.04180	.08240	.34310
14.777	18.752	.59910	1.50530	.00610	-.00130	.00000	2.01470	.04590	-.00370	.08550	.27710
14.759	33.074	.59940	1.50510	.01100	-.00330	.00000	1.99380	.04490	.05230	.09010	.17970
14.751	48.459	.60030	1.51130	.01550	-.00640	.00000	1.97740	.04440	.09010	.09180	.12440
14.740	63.690	.60090	1.51010	.02740	-.01460	.00000	1.97150	.04430	.11210	.09240	.09590
	GRADIENT	.00023	-.00111	.00002	-.00013	.00000	-.00102	.00192	.00286	.00031	-.00263

DATE 01 DEC 75 TABULATED SOURCE DATA - CA20

CA20 747/1 01 SI CARRIER DATA (RGN250) (01 DEC 75)

REFERENCE DATA

SREF = 5500.0000 SQ.FT. XMRP = 1339.9000 IN.XC
LREF = 327.7800 IN. YMRP = .0000 IN.YC
BREF = 2348.0400 IN. ZMRP = 190.8000 IN.ZC
SCALE = .0300

PARAMETRIC DATA

ALPHAC =	.000	BETAC =	.000
ELV-IB =	.000	ELV-OB =	3.000
ELEVON =	5.000	MACH =	.600
BETAO =	.000	PHI =	.000
DX =	10.000	DY =	.000

RUN NO. 636/ 0 RN/L = 3.25 GRADIENT INTERVAL = .00/ 12.00

ALPHAO	DZ	MACH	DX	DY	BETAO	PHI	ALPHAW	BETA	CL	CD	CLW
6.250	.172	.60020	15.27190	-.03320	.01450	.00000	1.97800	.05470	.09710	.09220	.11170
6.243	3.541	.59960	15.27150	-.02910	.01190	.00000	1.97180	.05450	.09860	.09270	.11390
6.236	7.711	.59990	15.27720	-.02610	.01060	.00000	1.96950	.05360	.10490	.09320	.10390
6.238	15.213	.60070	15.28380	-.02330	.00880	.00000	1.96200	.05350	.11890	.09430	.07930
6.237	18.581	.59920	15.28410	-.02260	.00730	.00000	1.96280	.05310	.12270	.09430	.07250
6.238	24.078	.59920	15.28710	-.02100	.00520	.00000	1.96020	.05300	.12980	.09410	.06360
	GRADIENT	-.00004	.00073	.00093	-.00051	.00000	-.00009	-.00015	.00105	.00013	-.00109

RUN NO. 637/ 0 RN/L = 3.24 GRADIENT INTERVAL = .00/ 12.00

ALPHAO	DZ	MACH	DX	DY	BETAO	PHI	ALPHAW	BETA	CL	CD	CLW
10.523	2.219	.59910	12.46830	-.02510	.00710	.00000	1.99630	.05490	.03420	.08330	.26610
10.508	5.391	.59950	12.46980	-.01920	.00660	.00000	1.99520	.04680	.03760	.08500	.26110
10.499	9.749	.60000	12.47340	-.01890	.00600	.00000	1.99040	.04620	.05020	.08720	.22860
10.491	17.197	.59950	12.47830	-.01460	.00350	.00000	1.99140	.04560	.07390	.09000	.17240
10.487	32.470	.59980	12.48740	-.01260	.00010	.00000	1.99540	.05270	.10570	.09200	.11340
10.486	39.016	.60020	12.49080	-.01380	.00090	.00000	1.99590	.05250	.11510	.09230	.09900
10.484	47.260	.59980	12.49400	-.00650	-.00130	.00000	1.99280	.04470	.12340	.09250	.08510
	GRADIEN	.00012	.00094	.00078	-.00015	.00000	-.00080	-.00109	.00217	.00052	-.00513

RUN NO. 638/ 0 RN/L = 3.23 GRADIENT INTERVAL = .00/ 12.00

ALPHAO	DZ	MACH	DX	DY	BETAO	PHI	ALPHAW	BETA	CL	CD	CLW
14.710	4.989	.60030	11.34780	-.00530	.00200	.00000	2.02580	.04720	-.02600	.07860	.35600
14.694	8.249	.59990	11.34880	-.00530	.00170	.00000	2.02180	.04740	-.02150	.08060	.35500
14.680	12.695	.60070	11.35090	-.00840	.00150	.00000	2.01540	.05400	-.00460	.08100	.31860
14.671	20.170	.60000	11.35310	-.00460	-.00080	.00000	2.00340	.05400	.02730	.08650	.25010
14.656	35.008	.59990	11.36060	-.00440	-.00170	.00000	1.98500	.05070	.06990	.08990	.16730
14.656	50.142	.59990	11.36550	.00210	-.00530	.00000	1.97450	.05240	.09820	.09130	.12130
14.648	64.911	.60050	11.37090	.01650	-.01370	.00000	1.96780	.04470	.11610	.09190	.09470
	GRADIENT	-.00012	.000	.00000	-.00009	.00000	-.00123	.00005	.00138	.00061	-.00337

ORIGINAL PAGE IS
OF POOR QUALITY

CA20 747/1 01 SI CARRIER DATA (RGN051) (01 DEC 75)

REFERENCE DATA

SREF = 5500.0000 SQ.FT. XMRP = 1339.9000 IN.XC
LREF = 327.7800 IN. YMRP = .0000 IN.YC
BREF = 2348.0400 IN. ZMRP = 190.8000 IN.ZC
SCALE = .0300

PARAMETRIC DATA

ALPHAC = .000 BETAC = .000
ELV-IB = .000 ELV-OB = 3.000
ELEVON = 5.000 MACH = .600
BETAO = .000 PHI = .000
DX = 20.000 DY = .000

RUN NO. 641/ 0 RN/L = 3.24 GRADIENT INTERVAL = .00/ 12.00

ALPHAO	DZ	MACH	DX	DY	BETAO	PHI	ALPHAH	BETA	CL	CD	CLM
6.190	8.425	.59990	25.24210	-.02560	.00940	.00000	1.96160	.05390	.11900	.09250	.06990
6.192	11.568	.59910	25.24410	-.02540	.00880	.00000	1.96010	.05370	.12310	.09290	.06480
6.193	16.022	.60000	25.25100	-.02440	.00710	.00000	1.95560	.05350	.12850	.09360	.05530
6.197	23.561	.59930	25.25360	-.02090	.00460	.00000	1.95580	.05310	.13500	.09360	.04950
	GRADIENT	-.00025	.00064	.00006	-.00019	.00000	-.00048	-.00006	.00130	.00013	-.00162

RUN NO. 640/ 0 RN/L = 3.25 GRADIENT INTERVAL = .00/ 12.00

ALPHAO	DZ	MACH	DX	DY	BETAO	PHI	ALPHAH	BETA	CL	CD	CLM
10.406	10.347	.59940	22.40780	-.01410	.00510	.00000	1.98200	.03850	.07270	.08720	.19790
10.407	13.221	.60000	22.41020	-.02080	.00430	.00000	1.97910	.05390	.08030	.08850	.17730
10.409	17.990	.59960	22.41380	-.01610	.00310	.00000	1.97280	.04580	.09080	.08990	.15110
10.410	25.437	.59920	22.42090	-.02000	.00140	.00000	1.96540	.05280	.10440	.09090	.12410
10.413	40.457	.59960	22.43270	-.00750	.00010	.00000	1.95580	.03700	.12350	.09180	.09050
10.411	46.554	.59940	22.43050	-.01450	-.00050	.00000	1.95860	.05260	.12830	.09220	.08380
	GRADIENT	.00000	.00000	.00000	.00000	.00000	.00000	.00000	.00000	.00000	.00000

RUN NO. 639/ 0 RN/L = 3.30 GRADIENT INTERVAL = .00/ 12.00

ALPHAO	DZ	MACH	DX	DY	BETAO	PHI	ALPHAH	BETA	CL	CD	CLM
14.618	17.230	.59990	21.18160	-.01070	.00160	.00000	1.99990	.04660	.02550	.08210	.29620
14.617	16.279	.60030	21.18350	-.00400	.00160	.00000	1.99560	.03860	.03680	.08490	.26170
14.616	20.672	.60080	21.18810	-.00640	.00000	.00000	1.98830	.04630	.04990	.08660	.23080
14.614	28.161	.60090	21.19310	-.00210	-.00190	.00000	1.98090	.04560	.06930	.08820	.19030
14.610	43.380	.60080	21.20220	-.00190	-.00220	.00000	1.97060	.04490	.09660	.09040	.13430
14.607	58.256	.60000	21.20560	.00290	-.00690	.00000	1.96620	.04470	.11440	.09140	.10530
14.604	68.990	.60040	21.21290	.01290	-.01260	.00000	1.96040	.04450	.12380	.09200	.08890
	GRADIENT	.00000	.00000	.00000	.00000	.00000	.00000	.00000	.00000	.00000	.00000

CA20 747/1 01 S1 CARRIER DATA (RGN0521 (01 DEC 75)

REFERENCE DATA

SREF =	5500.0000 SQ.FT.	XMRP =	1339.9000 IN.XC		
LREF =	327.7800 IN.	YMRP =	.0000 IN.YC		
BREF =	2348.0400 IN.	ZMRP =	190.8000 IN.ZC		
SCALE =	.0300				

PARAMETRIC DATA

ALPHAC =	4.000	BETAC =	.000
ELV-IB =	.000	ELV-OB =	3.000
ELEVON =	5.000	MACH =	.600
BETAO =	.000	PHI =	.000
DX =	.000	DY =	.000

RUN NO. 632/ 0 RN/L = 3.24 GRADIENT INTERVAL = .00/ 12.00

ALPHAO	DZ	MACH	DX	DY	BETAO	PHI	ALPHAW	BETA	CL	CD	CLM
6.161	-3.400	.60080	3.77560	-.02220	.01160	.00000	5.84160	.05500	.46200	.10470	-.07190
6.159	-.517	.60060	3.57990	-.01780	.01220	.00000	5.84240	.04650	.46040	.10410	-.05930
6.166	3.831	.60030	3.28090	-.01630	.01030	.00000	5.83970	.04590	.46470	.10360	-.05410
6.178	11.707	.59960	2.74170	-.01420	.00790	.00000	5.83720	.05290	.47520	.10340	-.05920
6.203	24.148	.59980	1.88550	-.00670	.00240	.00000	5.83190	.04470	.49010	.10270	-.06280
	GRADIENT	-.00009	-.06846	.00027	-.00030	.00000	-.00019	.00089	.00133	-.00003	-.00065

RUN NO. 646/ 0 RN/L = 3.24 GRADIENT INTERVAL = .00/ 12.00

ALPHAO	DZ	MACH	DX	DY	BETAO	PHI	ALPHAW	BETA	CL	CD	CLM
10.487	1.956	.59980	.61590	-.01230	.00670	.00000	5.86740	.03910	.38060	.09450	.07720
10.482	6.349	.60050	.31720	-.01200	.00600	.00000	5.86210	.04610	.39510	.09590	.05610
10.480	13.746	.59930	-.16850	-.00960	.00400	.00000	5.85350	.04550	.41040	.09780	.02060
10.493	29.253	.59980	-1.25310	-.00390	-.00130	.00000	5.84130	.05260	.45180	.09950	-.01780
10.497	34.851	.59990	-1.63870	-.00460	-.00050	.00000	5.83810	.05250	.46080	.09960	-.02330
10.501	44.044	.60010	-2.27250	-.00250	-.00050	.00000	5.83380	.04480	.47230	.09990	-.03510
	GRADIENT	.00016	-.06799	.00007	-.00016	.00000	-.00121	.00159	.00330	.00032	-.00480

RUN NO. 647/ 0 RN/L = 3.24 GRADIENT INTERVAL = .00/ 12.00

ALPHAO	DZ	MACH	DX	DY	BETAO	PHI	ALPHAW	BETA	CL	CD	CLM
14.823	.973	.60090	-.34980	-.00900	.00130	.00000	5.90030	.03900	.29020	.08260	.19340
14.798	3.966	.59980	-.55680	-.00710	.00180	.00000	5.89710	.03820	.29940	.08380	.18220
14.785	8.718	.60050	-.88540	-.00540	.00080	.00000	5.89000	.04570	.31890	.08760	.15440
14.777	16.065	.60050	-1.39120	-.00360	-.00020	.00000	5.87650	.05360	.35570	.09310	.09510
14.774	31.103	.60080	-2.42410	.00730	-.00380	.00000	5.85800	.04480	.40630	.09700	.03140
14.771	45.934	.59920	-3.46290	.00920	-.00550	.00000	5.84860	.05240	.43820	.09930	-.00210
14.768	60.784	.59920	-4.47470	.02360	-.01350	.00000	5.83630	.04490	.45920	.09990	-.02210
	GRADIENT	-.00003	-.06912	.00046	-.00008	.00000	-.00134	.00093	.00374	.00066	-.00511

ORIGINAL PAGE IS
OF POOR QUALITY

CA20 747/1 01 S1 CARRIER DATA (RGH053) (01 DEC 75)

REFERENCE DATA

SREF = 5500.0000 SQ.FT. XMRP = 1339.9000 IN.XC
LREF = 327.7800 IN. YMRP = .0000 IN.YC
BREF = 2348.0400 IN. ZMRP = 190.8000 IN.ZC
SCALE = .0300

PARAMETRIC DATA

ALPHAC = 4.000 BETAC = .000
ELV-IB = .000 ELV-OB = 3.000
ELEVON = 5.000 MACH = .600
BETAO = .000 PHI = .000
DX = 10.000 DY = .000

RUN NO. 635/ 0 RN/L = 3.27 GRADIENT INTERVAL = .00/ 12.00

ALPHAO	DZ	MACH	DX	DY	BETAO	PHI	ALPHAH	BETA	CL	CD	CLM
6.127	-3.556	.60030	13.78940	-.02850	.01620	.00000	5.83520	.04740	.47220	.10310	-.09120
6.127	-.595	.60070	13.58720	-.03250	.01490	.00000	5.83590	.06250	.47110	.10310	-.07880
6.134	3.736	.60070	13.29050	-.03270	.01370	.00000	5.83540	.06170	.47310	.10300	-.07040
6.151	11.277	.60010	12.77230	-.02220	.01110	.00000	5.83280	.04570	.48050	.10290	-.07230
6.169	17.788	.60020	12.32180	-.01940	.00890	.00000	5.83040	.04560	.48720	.10260	-.07190
	GRADIENT	-.00008	-.06872	.00139	-.00034	.00000	-.00034	-.00212	.00098	-.00001	-.00025

RUN NO. 694/ 0 RN/L = 3.23 GRADIENT INTERVAL = .00/ 12.00

ALPHAO	DZ	MACH	DX	DY	BETAO	PHI	ALPHAH	BETA	CL	CD	CLM
10.448	-1.201	.60020	10.79470	-.01680	.01530	.00000	5.84020	.00060	.40480	.09350	.05940
10.431	1.842	.60020	10.59270	-.01490	.01460	.00000	5.84070	-.00010	.40430	.09430	.06830
10.432	6.408	.60090	10.28290	-.00960	.01300	.00000	5.83720	-.00860	.41350	.09570	.04830
10.436	13.966	.59990	9.77130	-.01040	.01100	.00000	5.82810	-.00150	.43230	.09760	.01500
10.455	28.936	.60060	8.74770	-.00770	.00610	.00000	5.82040	.00580	.45920	.09890	-.02060
10.476	43.999	.60000	7.70840	-.00180	.00500	.00000	5.81390	-.00170	.47760	.09940	-.03780
10.477	48.276	.60010	7.41470	-.00160	.00420	.00000	5.81240	-.00180	.48100	.09940	-.04260
	GRADIENT	.00015	-.06785	.00116	-.00035	.00000	-.00077	-.00186	.00208	.00031	-.00438

RUN NO. 693/ 0 RN/L = 3.23 GRADIENT INTERVAL = .00/ 12.00

ALPHAO	DZ	MACH	DX	DY	BETAO	PHI	ALPHAH	BETA	CL	CD	CLM
14.751	1.086	.60030	9.51270	-.01800	.00830	.00000	5.86830	-.00710	.32960	.08090	.21000
14.731	4.167	.59960	9.30440	-.01580	.00800	.00000	5.86720	-.00830	.33310	.08270	.20370
14.724	8.638	.60010	9.00320	-.01780	.00750	.00000	5.86540	-.00090	.34810	.08700	.16800
14.722	16.335	.60040	8.47860	-.01790	.00660	.00000	5.86020	.00610	.37870	.09200	.09770
14.722	31.320	.59960	7.45320	-.00050	.00300	.00000	5.83490	-.00200	.41980	.09590	.03070
14.727	46.516	.60010	6.40990	-.00130	.00270	.00000	5.82450	.00580	.44790	.09740	-.00500
14.727	61.207	.59940	5.39790	.01430	-.00580	.00000	5.81820	-.00200	.46510	.09840	-.02410
	GRADIENT	-.00002	-.06746	-.00001	-.00011	.00000	-.00122	.00088	.00251	.00082	-.00574

CA20 747/1 01 SI CARRIER DATA (RGN054) (01 DEC 75)

REFERENCE DATA

SREF = 5500.0000 SQ.FT. XMRP = 1339.9000 IN.XC
LREF = 327.7800 IN. YMRP = .0000 IN.YC
BREF = 2348.0400 IN. ZMRP = 190.8000 IN.ZC
SCALE = .0300

PARAMETRIC DATA

ALPHAC =	4.000	BETAC =	.000
ELV-IB =	.000	ELV-OB =	3.000
ELEVON =	5.000	MACH =	.600
BETAO =	.000	PHI =	.000
DX =	20.000	DY =	.000

RUN NO. 642/ 0 RN/L = 3.22 GRADIENT INTERVAL = .00/ 12.00

ALPHAO	DZ	MACH	DX	DY	BETAO	PHI	ALPHAW	BETA	CL	CD	CLM
6.093	2.348	.59910	23.37960	-.02250	.01360	.00000	5.83400	.04650	.48150	.10180	-.10378
6.103	6.577	.59930	23.15610	-.02820	.01220	.00000	5.83120	.05400	.48320	.10200	-.09950
6.111	9.879	.59920	22.86210	-.02590	.01070	.00000	5.83040	.05370	.48580	.10220	-.09460
6.132	17.481	.59960	22.33520	-.01930	.00820	.00000	5.82870	.04560	.49090	.10220	-.09090
6.145	25.860	.59980	21.75890	-.02230	.00550	.00000	5.82680	.05300	.49690	.10170	-.08390
	GRADIENT	.00001	-.06870	-.00042	-.00038	.00000	-.00046	.00090	.00057	.00005	.00120

RUN NO. 677/ 0 RN/L = 3.28 GRADIENT INTERVAL = .00/ 12.00

ALPHAO	DZ	MACH	DX	DY	BETAO	PHI	ALPHAW	BETA	CL	CD	CLM
10.302	4.428	.59980	20.39070	.00160	.01220	.00000	5.85300	-.00890	.43340	.09510	.04020
10.309	7.459	.60020	20.18050	.00540	.01130	.00000	5.84870	-.01700	.43870	.09610	.02340
10.316	11.949	.59990	19.87580	.01160	.01040	.00000	5.84580	-.02500	.44660	.09730	.00880
10.336	19.513	.59990	19.35470	.00820	.00760	.00000	5.83900	-.01750	.45860	.09830	-.01060
10.357	34.554	.60000	18.31350	.00950	.00490	.00000	5.83680	-.00990	.47710	.09900	-.03350
10.367	48.107	.60030	17.37700	.01200	.00310	.00000	5.83240	-.00970	.48920	.09940	-.04360
	GRADIENT	.00001	-.06846	.00129	-.00024	.00000	-.00094	-.00212	.00176	.00029	-.00411

RUN NO. 676/ 0 RN/L = 3.27 GRADIENT INTERVAL = .00/ 12.00

ALPHAO	DZ	MACH	DX	DY	GETAO	PHI	ALPHAW	BETA	CL	CD	CLM
14.565	7.759	.59950	18.91230	-.00490	.00530	.00000	5.87200	-.00890	.37750	.08730	.16440
14.565	10.920	.60050	18.69760	-.00170	.00500	.00000	5.87010	-.01700	.38850	.08960	.13180
14.575	15.111	.59950	18.40910	-.01090	.00430	.00000	5.86550	-.00210	.40050	.09180	.10140
14.571	22.922	.60080	17.87690	.00060	.00150	.00000	5.85810	-.01770	.42020	.09430	.05810
14.590	37.645	.59910	16.86160	.00120	.00210	.00000	5.84840	-.01000	.44590	.09640	.01570
14.589	52.832	.59920	15.81080	.01610	-.00130	.00000	5.84130	-.01000	.46510	.09780	-.01250
14.705	68.281	.60040	14.72650	.03240	-.00970	.00000	5.83640	-.01740	.47840	.09860	-.02630
	GRADIENT	.00032	-.06791	.00101	-.00009	.00000	-.00060	-.00256	.00348	.00073	-.01031

CA20 747/1 01 SI CARRIER DATA (RGN055) (01 DEC 75)

REFERENCE DATA

SREF = 5500.0000 SQ.FT. XMRP = 1339.9000 IN.XC
LREF = 327.7800 IN. YMRP = .0000 IN.YC
BREF = 2348.0400 IN. ZMRP = 190.8000 IN.ZC
SCALE = .0300

PARAMETRIC DATA

ALPHAC =	8.000	BETAC =	.000
ELV-IB =	.000	ELV-OB =	3.000
ELEVON =	5.000	MACH =	.600
BETAO =	.000	PHI =	.000
DX =	.000	DY =	.000

RUN NO. 633/ 0 RN/L = 3.23 GRADIENT INTERVAL = .00/ 12.00

ALPHAO	DZ	MACH	DX	DY	BETAO	PHI	ALPHAH	BETA	CL	CD	CLM
5.939	-.987	.59920	1.93130	-.01440	.01090	.00000	9.71490	.04850	.84550	.16000	-.15970
5.987	1.851	.59950	1.54240	-.01510	.00980	.00000	9.71670	.05580	.84050	.15820	-.14770
6.027	6.647	.60070	.87960	-.01400	.00900	.00000	9.71750	.04770	.83920	.15780	-.13360
6.074	14.133	.59940	-.15900	-.01320	.00770	.00000	9.71900	.05480	.84190	.15700	-.11960
6.098	18.812	.60020	-.80660	-.01220	.00620	.00000	9.71600	.05470	.84430	.15700	-.11150
6.122	24.109	.60050	-1.54470	-.00780	.00320	.00000	9.71780	.04700	.84590	.15780	-.10630
	GRADIENT	.00025	-.13820	.00023	-.00017	.00000	.00017	-.00169	-.00029	-.00008	.00294

RUN NO. 645/ 0 RN/L = 3.25 GRADIENT INTERVAL = .00/ 12.00

ALPHAO	DZ	MACH	DX	DY	BETAO	PHI	ALPHAH	BETA	CL	CD	CLM
10.299	-2.897	.59940	-.65080	-.01520	.00760	.00000	9.73420	.05720	.77120	.14740	-.09940
10.303	.285	.60020	-1.07800	-.01080	.00800	.00000	9.73240	.04110	.77070	.14660	-.08540
10.323	4.651	.60030	-1.67400	-.01440	.00810	.00000	9.73030	.04770	.77720	.14700	-.08430
10.355	12.183	.60030	-2.70650	-.01300	.00630	.00000	9.72660	.04680	.78780	.14730	-.08460
10.431	27.416	.60060	-4.81880	-.00870	.00170	.00000	9.71950	.05430	.80850	.14920	-.08420
10.459	42.296	.60050	-6.88330	-.00430	.00010	.00000	9.71470	.05450	.82270	.15100	-.08120
10.464	47.714	.59970	-7.63700	-.00290	-.00120	.00000	9.71360	.05430	.82590	.15140	-.08170
	GRADIENT	.00002	-.13650	-.00082	.00002	.00000	-.00048	.00151	.00149	.00009	.00025

RUN NO. 644/ 0 RN/L = 3.28 GRADIENT INTERVAL = .00/ 12.00

ALPHAO	DZ	MACH	DX	DY	BETAO	PHI	ALPHAH	BETA	CL	CD	CLM
14.701	-.738	.60050	-2.01430	-.01310	.00390	.00000	9.76940	.04100	.67360	.12960	-.02710
14.691	2.335	.60030	-2.43060	-.01170	.00370	.00000	9.76740	.03260	.68000	.13120	-.02970
14.699	6.812	.60060	-3.04150	-.01650	.00270	.00000	9.76110	.03970	.69710	.13370	.00200
14.714	14.542	.59980	-4.10420	-.01810	.00100	.00000	9.75120	.04640	.72460	.13700	-.03280
14.743	29.472	.60060	-6.16200	-.01050	-.00310	.00000	9.73740	.04580	.76370	.14160	-.05860
14.754	44.335	.60010	-8.22650	-.00360	-.00280	.00000	9.72820	.05410	.79000	.14500	-.06920
14.762	59.151	.60020	-10.28770	.01310	-.00990	.00000	9.72010	.04650	.80690	.14800	-.07580
	GRADIENT	.00007	-.13645	-.00107	-.00022	.00000	-.00141	.00159	.00382	.00056	-.00619

CA20 747/1 01 S1 CARRIER DATA (RGN058) (01 DEC 75)

REFERENCE DATA

SREF = 5500.0000 SQ.FT. XMRP = 1339.9000 IN.XC
LREF = 327.7800 IN. YMRP = .0000 IN.YC
BREF = 2348.0400 IN. ZMRP = 190.8000 IN.ZC
SCALE = .0300

PARAMETRIC DATA

ALPHAC =	8.000	BETAC =	.000
ELV-IB =	.000	ELV-OB =	3.000
ELEVON =	5.000	MACH =	.600
BETAO =	.000	PHI =	.000
DX =	10.000	DY =	.000

RUN NO. 634/ 0 RN/L = 3.30 GRADIENT INTERVAL = .00/ 12.00

ALPHAO	DZ	MACH	DX	DY	BETAO	PHI	ALPHAW	BETA	CL	CD	CLM
5.917	-2.155	.59920	12.18910	-.03110	.01740	.00000	9.71230	.05720	.84430	.15780	-.18670
5.956	.903	.60070	11.76590	-.02850	.01660	.00000	9.71600	.04890	.84110	.15680	-.17460
5.994	5.537	.59940	11.12250	-.02580	.01440	.00000	9.71450	.04800	.83960	.15610	-.15580
6.038	12.654	.60000	10.12740	-.02420	.01290	.00000	9.71870	.04760	.84180	.15610	-.13690
6.070	19.121	.59950	9.23370	-.02490	.01020	.00000	9.71600	.05510	.84350	.15610	-.12400
6.098	25.727	.59960	8.31400	-.02300	.00700	.00000	9.71520	.05500	.84620	.15600	-.11530
	GRADIENT	-.00028	-.13886	.00058	-.00047	.00000	-.00032	-.00019	-.00032	-.00015	.00406

RUN NO. 691/ 0 RN/L = 3.24 GRADIENT INTERVAL = .00/ 12.00

ALPHAO	DZ	MACH	DX	DY	BETAO	PHI	ALPHAW	BETA	CL	CD	CLM
10.217	-2.770	.59940	9.39150	-.01990	.01780	.00000	9.73900	.01070	.79550	.14960	-.10730
10.225	.202	.60050	8.98730	-.01830	.01690	.00000	9.73760	.01010	.79400	.14950	-.09640
10.258	5.005	.60030	8.31960	-.01770	.01580	.00000	9.73910	.00890	.79670	.14920	-.08830
10.289	12.254	.60010	7.32340	-.01180	.01310	.00000	9.73430	.00070	.80400	.14970	-.08770
10.356	27.323	.59960	5.23270	-.01300	.00800	.00000	9.72900	.01580	.81950	.15130	-.08840
10.401	42.555	.59930	3.10580	-.00360	.00660	.00000	9.72690	.00060	.83210	.15270	-.08590
10.410	48.530	.60030	2.27610	-.00620	.00600	.00000	9.72320	.00840	.83660	.15360	-.08460
	GRADIENT	-.00004	-.13901	.00012	-.00023	.00000	.00031	-.00025	.00056	-.00006	.00169

RUN NO. 692/ 0 RN/L = 3.23 GRADIENT INTERVAL = .00/ 12.00

ALPHAO	DZ	MACH	DX	DY	BETAO	PHI	ALPHAW	BETA	CL	CD	CLM
14.599	-.266	.59960	7.86010	-.01000	.01200	.00000	9.76440	-.00550	.72100	.13570	.03510
14.597	2.610	.59960	7.47010	-.01020	.01100	.00000	9.76290	-.00620	.72530	.13680	.02810
14.613	7.478	.60000	6.80220	-.01470	.01070	.00000	9.76070	.00080	.73730	.13850	.00430
14.633	14.672	.60030	5.81800	-.02120	.00930	.00000	9.75250	.00770	.75380	.14070	-.02020
14.673	29.795	.60000	3.73130	-.01120	.00310	.00000	9.74240	-.00020	.78180	.14430	-.05350
14.695	44.753	.59980	1.65330	-.01330	.00280	.00000	9.73500	.00790	.80280	.14730	-.06330
14.712	59.602	.60090	-.41650	-.00080	-.00360	.00000	9.72990	.00820	.81760	.14990	-.07180
	GRADIENT	.00008	-.13720	-.00092	-.00006	.00000	-.00045	.00144	.00246	.00035	-.00489

DATE 01 DEC 75 TABULATED SOURCE DATA - CA20

CA20 747/1 01 SI CARRIER DATA (RGN0571 (01 DEC 75)

REFERENCE DATA

SREF = 5500.0000 SQ.FT. XMRP = 1339.9000 IN.XC
LREF = 327.7800 IN. YMRP = .0000 IN.YC
BREF = 2348.0400 IN. ZMRP = 180.8000 IN.ZC
SCALE = .0300

PARAMETRIC DATA

ALPHAC = 8.000 BETAC = .000
ELV-IB = .000 ELV-OB = 3.000
ELEVON = 5.000 MACH = .600
BETAO = .000 PHI = .000
DX = 20.000 DY = .000

RUN NO. 643/ 0 RN/L = 3.22 GRADIENT INTERVAL = .00/ 12.00

ALPHAO	DZ	MACH	DX	DY	BETAO	PHI	ALPHAH	BETA	CL	CD	CLH
5.918	-3.193	.60060	22.40390	-.02500	.01850	.00000	9.70870	.04980	.84540	.15510	-.23180
5.942	-.094	.60060	21.97440	-.02980	.01740	.00000	9.70850	.05680	.84090	.15440	-.20860
5.973	4.408	.60010	21.34670	-.02910	.01520	.00000	9.70990	.05610	.83830	.15420	-.18260
6.011	11.874	.60030	20.31020	-.02640	.01200	.00000	9.70990	.05540	.83970	.15480	-.15620
6.079	26.802	.60020	18.22690	-.01920	.00740	.00000	9.71150	.04720	.84360	.15530	-.12120
	GRADIENT	.00003	-.13883	.00036	-.00043	.00000	.00000	-.00009	.00019	.00008	.00354

RUN NO. 674/ 0 RN/L = 3.27 GRADIENT INTERVAL = .00/ 12.00

ALPHAO	DZ	MACH	DX	DY	BETAO	PHI	ALPHAH	BETA	CL	CD	CLH
10.226	-1.405	.59980	19.22120	.00080	.01770	.00000	9.73920	-.00550	.80760	.14860	-.11170
10.235	1.641	.60060	18.80350	.00330	.01660	.00000	9.73750	-.01420	.80670	.14880	-.10340
10.253	6.023	.60050	18.19850	.00170	.01390	.00000	9.73650	-.00710	.80990	.14940	-.09810
10.290	13.703	.60070	17.13510	.00620	.01250	.00000	9.73300	-.01530	.81420	.15010	-.09170
10.351	28.615	.59970	15.05930	.00700	.00660	.00000	9.73110	-.00770	.82630	.15150	-.08910
10.395	43.888	.60080	12.92800	.00800	.00590	.00000	9.72550	-.00750	.83670	.15340	-.08300
10.403	49.633	.59980	12.11970	.00900	.00450	.00000	9.72910	-.00730	.83930	.15370	-.08030
	GRADIENT	-.00002	-.13809	-.00037	-.00062	.00000	-.00023	.00162	.00073	.00014	.00121

RUN NO. 675/ 0 RN/L = 3.27 GRADIENT INTERVAL = .00/ 12.00

ALPHAO	DZ	MACH	DX	DY	BETAO	PHI	ALPHAH	BETA	CL	CD	CLH
14.444	1.517	.60060	17.56580	.01060	.01100	.00000	9.75870	-.02180	.75050	.13890	.02960
14.457	4.549	.59960	17.14950	.00580	.00970	.00000	9.75720	-.01490	.75450	.13960	.01700
14.478	9.043	.59980	16.53140	-.00060	.00910	.00000	9.75430	-.00770	.76230	.14120	-.00150
14.497	16.873	.60010	15.45500	.00340	.00640	.00000	9.74680	-.01590	.77660	.14290	-.02410
14.563	31.919	.59990	13.36970	.00580	.00150	.00000	9.73960	-.01590	.79650	.14580	-.04950
14.607	46.722	.60090	11.30630	-.00570	.00080	.00000	9.73540	-.00030	.81220	.14820	-.05870
14.699	62.461	.59960	9.09770	.00820	-.00670	.00000	9.73250	-.00770	.82320	.15040	-.05640
	GRADIENT	-.00009	-.13746	-.00148	-.00024	.00000	-.00059	.00185	.00158	.00031	-.00401

CA20 747/1 01 S1 CARRIER DATA (RGN0581 (01 DEC 75)

REFERENCE DATA

SREF = 5500.0000 SQ.FT. XMRP = 1339.9000 IN.XC
LREF = 327.7800 IN. YMRP = .0000 IN.YC
BREF = 2348.0400 IN. ZMRP = 190.8000 IN.ZC
SCALE = .0300

PARAMETRIC DATA

ALPHAC =	4.000	BETAC =	.000
ELV-IB =	.000	ELV-OB =	3.000
ELEVON =	5.000	MACH =	.600
BETAO =	.000	PHI =	.000
DX =	.000	DY =	10.000

RUN NO. 775/ 0 RN/L = 3.33 GRADIENT INTERVAL = .00/ 12.00

ALPHAO	DZ	MACH	DX	DY	BETAO	PHI	ALPHAW	BETA	CL	CD	CLM
10.526	-1.419	.60030	.85680	9.98100	.02160	.00000	5.83050	.01560	.38440	.09560	.04080
10.526	1.326	.60030	.67100	9.97800	.02320	.00000	5.82840	.02110	.39110	.09630	.04010
10.524	5.838	.60070	.33640	9.97700	.02280	.00000	5.81650	.00970	.40530	.09740	.02370
10.524	13.085	.59950	-.12830	9.97800	.01910	.00000	5.81440	.00650	.42460	.09850	.00170
10.536	28.495	.60020	-1.17810	9.98970	.00690	.00000	5.80330	.01060	.45580	.09940	-.03150
10.542	43.191	.60090	-2.18280	10.00100	-.00020	.00000	5.79600	.01030	.47600	.09970	-.04680
10.542	47.091	.60080	-2.45200	10.00520	-.00310	.00000	5.79670	.01100	.48030	.09980	-.04900
	GRADIENT	.00009	-.06751	-.00022	-.00007	.00000	-.00211	-.00253	.00315	.00024	-.00363

RUN NO. 781/ 0 RN/L = 3.22 GRADIENT INTERVAL = .00/ 12.00

ALPHAO	DZ	MACH	DX	DY	BETAO	PHI	ALPHAW	BETA	CL	CD	CLM
14.865	1.432	.60080	-.35660	9.94370	.01800	.00000	5.86870	.02570	.29920	.09530	.17520
14.849	5.001	.60000	-.60690	9.94940	.02110	.00000	5.86350	.02250	.31400	.08810	.14760
14.843	8.890	.60050	-.87520	9.95610	.02080	.00000	5.85720	.00920	.33250	.09040	.12130
14.834	16.716	.60050	-1.41420	9.96810	.01550	.00000	5.84460	.01190	.36760	.09360	.06750
14.831	29.955	.60070	-2.32080	9.98930	.00570	.00000	5.82750	-.00030	.40920	.09660	.01660
14.830	31.354	.60040	-2.41560	9.98990	.00430	.00000	5.82630	.00740	.41230	.09680	.01220
14.828	46.543	.60000	-3.46170	10.00500	-.00210	.00000	5.81770	.00830	.44190	.09800	-.01720
14.820	61.677	.59960	-4.50100	10.02160	-.01260	.00000	5.80020	.01030	.46130	.09980	-.03330
	GRADIENT	-.00004	-.06953	.00166	.00037	.00000	-.00154	-.00223	.00447	.00068	-.00722

ORIGINAL PAGE IS
OF POOR QUALITY

CA20 747/1 01 S1 CARRIER DATA (RGN059) (01 DEC 75)

REFERENCE DATA

SREF =	5500.0000 SQ.FT.	XMRP =	1339.9000 IN.XC
LREF =	327.7800 IN.	YMRP =	.0000 IN.YC
BREF =	2348.0400 IN.	ZMRP =	190.8000 IN.ZC
SCALE =	.0300		

PARAMETRIC DATA

ALPHAC =	4.000	BETAC =	.000
ELV-IB =	.000	ELV-OB =	3.000
ELEVON =	5.000	MACH =	.600
BETAO =	.000	PHI =	.000
DX =	10.000	DY =	10.000

RUN NO. 735/ 0 RN/L = 3.31 GRADIENT INTERVAL = .00/ 12.00

ALPHAO	DZ	MACH	DX	DY	BETAO	PHI	ALPHAW	BETA	CL	CD	CLM
10.410	-2.369	.59950	10.89070	9.99070	.02220	.00000	5.86010	.00860	.41650	.09480	.02348
10.404	1.142	.60030	10.65090	9.98750	.02500	.00000	5.86050	.00600	.41680	.09620	.02950
10.407	5.650	.60010	10.34040	9.98660	.02370	.00000	5.85670	-.00520	.42800	.09710	.01560
10.424	13.193	.60040	9.81870	9.99950	.01890	.00000	5.85130	-.00840	.44330	.09840	-.00630
10.437	27.965	.60000	8.80350	9.99570	.00820	.00000	5.84270	-.00450	.46750	.09930	-.03170
10.445	42.957	.59950	7.77080	10.00850	.00120	.00000	5.83450	-.01260	.48380	.09950	-.04970
10.450	46.957	.60000	7.49300	10.00900	-.00140	.00000	5.83280	-.00430	.48830	.09970	-.05350
	GRADIENT	-.00004	-.06888	-.00020	-.00029	.00000	-.00084	-.00248	.00248	.00020	-.00308

RUN NO. 738/ 0 RN/L = 3.24 GRADIENT INTERVAL = .00/ 12.00

ALPHAO	DZ	MACH	DX	DY	BETAO	PHI	ALPHAW	BETA	CL	CD	CLM
14.679	-.128	.60020	9.59730	9.97850	.01040	.00000	5.89440	-.00270	.34820	.08480	.15750
14.671	3.023	.60010	9.38060	9.97590	.01530	.00000	5.89080	-.00540	.35270	.08680	.14580
14.668	7.553	.60000	9.06900	9.97480	.01440	.00000	5.88650	-.00590	.36620	.09010	.11860
14.673	14.858	.60060	8.56540	9.98310	.01020	.00000	5.87810	-.01910	.38990	.09320	.07190
14.673	30.056	.60000	7.51480	10.00810	.00090	.00000	5.86360	-.02340	.42960	.09610	.01070
14.692	44.947	.60060	6.48600	10.02130	-.00590	.00000	5.85260	-.02250	.45350	.09760	-.01620
14.693	59.957	.60050	5.43820	10.03040	-.01380	.00000	5.85030	-.00490	.47160	.09860	-.03380
	GRADIENT	-.00002	-.08979	-.00024	-.00020	.00000	-.00095	.00011	.00298	.00073	-.00600

CA20 747/1 01 S1 CARRIER DATA (RGN060) (01 DEC 75)

REFERENCE DATA

SREF = 5500.0000 SQ.FT. XMRP = 1339.9000 IN.XC
LREF = 327.7800 IN. YMRP = .0000 IN.YC
BREF = 2348.0400 IN. ZMRP = 190.8000 IN.ZC
SCALE = .300

PARAMETRIC DATA

ALPHAC = 8.000 BETAC = .000
ELV-IB = .000 ELV-OB = 3.000
ELEVON = 5.000 MACH = .600
BETAO = .000 PHI = .000
DX = .000 DY = 10.000

RUN NO. 780/ 0 RN/L = 3.24 GRADIENT INTERVAL = .00/ 12.00

ALPHAO	DZ	MACH	DX	DY	BETAO	PHI	ALPHAW	BETA	CL	CD	CLM
10.362	-1.757	.60010	-.78530	10.03920	.00820	.00000	9.67770	.00770	.76860	.14580	-.08450
10.376	.812	.60050	-1.13020	10.01360	.01490	.00000	9.67470	.01270	.77150	.14630	-.08210
10.393	5.122	.59910	-1.71630	9.99440	.02190	.00000	9.67280	.01040	.77730	.14630	-.08900
10.433	12.363	.60010	-2.71010	9.97970	.02480	.00000	9.67120	.00750	.72890	.14680	-.09060
10.480	27.851	.59950	-4.64220	9.98430	.01500	.00000	9.66450	.00390	.60920	.14850	-.09380
10.511	42.980	.59990	-6.92130	9.99200	.00710	.00000	9.65550	.00540	.62160	.14970	-.09290
10.512	46.793	.59930	-7.44810	9.99030	.00520	.00000	9.65390	.02120	.82620	.15010	-.09210
	GRADIENT	-.00032	-.13500	-.00446	.00162	.00000	-.00044	-.00053	.00135	.00000	-.00137

RUN NO. 787/ 0 RN/L = 3.18 GRADIENT INTERVAL = .00/ 12.00

ALPHAO	DZ	MACH	DX	DY	BETAO	PHI	ALPHAW	BETA	CL	CD	CLM
14.755	.305	.60060	-2.12040	10.00190	.00500	.00000	9.69920	.02650	.68250	.13190	.01070
14.757	3.230	.59980	-2.51630	9.98410	.01160	.00000	9.69540	.02840	.69150	.13310	-.00270
14.766	7.801	.60080	-3.13560	9.96970	.01720	.00000	9.69050	.02280	.70790	.13480	-.02160
14.743	15.148	.60010	-4.13630	9.96310	.01620	.00000	9.68370	.01890	.72240	.13700	-.04490
14.783	15.393	.60090	-4.17270	9.96030	.01690	.00000	9.68250	.01880	.73230	.13720	-.04640
14.805	30.352	.60060	-8.21870	9.96960	.00920	.00000	9.66770	.00970	.76790	.14100	-.07230
14.814	45.218	.60030	-8.27030	9.98620	.00220	.00000	9.66150	.01090	.79180	.14430	-.08160
14.814	60.205	.60010	-10.34390	10.00840	-.00810	.00000	9.65530	.02060	.80940	.14690	-.08260
	GRADIENT	.00004	-.13546	-.00420	.00159	.00000	-.00112	-.00056	.00341	.00039	-.00429

CA20 747/1 01 S1 CARRIER DATA (RGN061) (01 DEC 75)

REFERENCE DATA

SREF = 6500.0000 SQ.FT. XMRP = 1339.9000 IN.XC
LREF = 327.7800 IN. YMRP = .0000 IN.YC
BREF = 2348.0400 IN. ZMRP = 190.8000 IN.ZC
SCALE = .0300

PARAMETRIC DATA

ALPHAC =	8.000	BETAC =	.000
ELV-IB =	.000	ELV-OB =	3.000
ELEVON =	5.000	MACH =	.600
BETAO =	.000	PHI =	.000
DX =	10.000	DY =	10.000

RUN NO. 736/ 0 RN/L = 3.27 GRADIENT INTERVAL = .00/ 12.00

ALPHAO	DZ	MACH	DX	DY	BETAO	PHI	ALPHAH	BETA	CL	CD	CLM
10.233	-3.822	.59980	9.54260	10.05490	.00500	.00000	9.72970	-.00620	.80040	.15000	-.10130
10.250	-.443	.59940	9.08310	10.02460	.01480	.00000	9.72840	-.00130	.79830	.14910	-.09530
10.273	3.946	.60060	8.47950	10.00670	.02180	.00000	9.72760	-.00370	.80130	.14910	-.09380
10.306	11.425	.59960	7.44960	9.99240	.02410	.00000	9.72290	-.00650	.80900	.14930	-.09690
10.370	26.395	.59930	5.36860	9.99710	.01400	.00000	9.72260	-.01050	.82380	.15050	-.09740
10.405	41.249	.60010	3.30380	10.00370	.00630	.00000	9.71680	-.00950	.83420	.15230	-.09310
10.417	47.343	.60010	2.45280	10.00480	.00340	.00000	9.71510	-.00120	.83920	.15310	-.08960
	GRADIENT	-.00013	-.13771	-.00191	.00031	.00000	-.00063	-.00037	.00103	.00003	-.00041

RUN NO. 737/ 0 RN/L = 3.24 GRADIENT INTERVAL = .00/ 12.00

ALPHAO	DZ	MACH	DX	DY	BETAO	PHI	ALPHAH	BETA	CL	CD	CLM
14.551	-1.912	.59960	8.11220	10.04110	.00360	.00000	9.75230	-.01040	.73130	.13660	.01210
14.559	1.350	.60000	7.66560	10.02940	.01050	.00000	9.75390	-.00860	.73460	.13780	.00420
14.571	5.795	.59930	7.05740	10.00480	.01380	.00000	9.74870	.00140	.74350	.13870	-.01350
14.596	13.276	.59950	6.02790	9.99330	.01360	.00000	9.74290	-.01120	.76040	.14060	-.03930
14.628	27.980	.60090	3.99750	9.99600	.00470	.00000	9.73330	-.02110	.78780	.14400	-.06660
14.652	43.114	.60090	1.69710	9.99740	-.00080	.00000	9.72630	-.01210	.80770	.14700	-.07510
14.658	57.868	.60010	-.16040	10.01600	-.01010	.00000	9.72200	-.00990	.81970	.14940	-.08050
	GRADIENT	-.00016	-.13683	-.00553	.00074	.00000	-.00117	.00225	.00200	.00020	-.00398

CA20 747/1 01 S1 CARRIER DATA (RGN0621 (01 DEC 75)

REFERENCE DATA

SREF =	9500.0000 SQ.FT.	XMRP =	1339.9000 IN.XC		
LREF =	327.7800 IN.	YMRP =	.0000 IN.YC		
BREF =	2348.0400 IN.	ZMRP =	180.8000 IN.ZC		
SCALE =	.0300				

PARAMETRIC DATA

ALPHAC =	4.000	BETAC =	-5.000
ELV-IB =	.000	ELV-OB =	3.000
ELEVON =	5.000	MACH =	.600
BETAO =	.000	PHI =	.000
DX =	.000	DY =	.000

RUN NO. 649/ 0 RN/L = 3.23 GRADIENT INTERVAL = .00/ 12.00

ALPHAO	DZ	MACH	DX	DY	BETAO	PHI	ALPHAW	BETA	CL	CD	CLM
10.503	-1.137	.59340	.60340	1.02360	.03310	.00000	5.86240	-4.98170	.38910	.08820	.03030
10.494	1.805	.59310	.60690	1.04100	.02650	.00000	5.85930	-4.97100	.38940	.08860	.03360
10.493	8.478	.60010	.29110	1.07360	.01660	.00000	5.85650	-4.97830	.40150	.09060	.02080
10.492	14.163	.59930	-.23820	1.09950	.00560	.00000	5.85080	-4.97850	.42070	.09280	-.00150
10.505	28.706	.59930	-1.23230	1.11960	-.00320	.00000	5.83810	-4.97200	.44950	.09440	-.02640
10.508	37.359	.59920	-1.82780	1.12640	-.00420	.00000	5.83280	-4.98120	.46180	.09480	-.03290
10.511	44.033	.59540	-2.22840	1.12900	-.00370	.00000	5.83110	-4.98850	.46930	.09480	-.03860
	GRADIENT	.00021	-.05767	.00697	-.00233	.00000	-.00094	-.00150	.00259	.00043	-.00381

RUN NO. 648/ 0 RN/L = 3.23 GRADIENT INTERVAL = .00/ 12.00

ALPHAO	DZ	MACH	DX	DY	BETAO	PHI	ALPHAW	BETA	CL	CD	CLM
14.815	1.009	.59980	-.36760	.95880	.02150	.00000	5.88300	-4.94920	.30940	.08140	.12230
14.791	4.326	.60030	-.59540	.96740	.01680	.00000	5.88950	-4.94670	.31430	.08130	.12890
14.781	8.540	.60010	-.88320	.99440	.01030	.00000	5.88550	-4.96920	.32880	.08330	.11040
14.774	15.930	.60000	-1.39450	1.01820	.00320	.00000	5.87180	-4.97950	.35720	.08830	.07180
14.772	31.119	.59970	-2.44090	1.04050	-.00590	.00000	5.85680	-4.97430	.40500	.09240	.01990
14.770	46.180	.59930	-3.47810	1.04640	-.00790	.00000	5.84340	-4.97320	.43530	.09360	-.00930
14.771	61.235	.60020	-4.51680	1.06280	-.01630	.00000	5.83610	-4.98050	.45550	.09420	-.02520
	GRADIENT	.00004	-.06914	.00479	-.00141	.00000	-.00035	-.00277	.00261	.00026	-.00170

ORIGINAL PAGE IS
OF POOR QUALITY

CA20 747/1 01 S1 CARRIER DATA (RGN063) (01 DEC 75)

REFERENCE DATA

SREF = 5500.0000 SQ.FT. XMRP = 1339.9000 IN.XC
LREF = 327.7800 IN. YMRP = .0000 IN.YC
BREF = 2348.0400 IN. ZMRP = 190.8000 IN.ZC
SCALE = .0300

PARAMETRIC DATA

ALPHAC = 4.000 BETAC = -5.000
ELV-IB = .000 ELV-OB = 3.000
ELEVON = 5.000 MACH = .600
BETAO = .000 PHI = .000
DX = 10.000 DY = .000

RUN NO. 687/ 0 RN/L = 3.29 GRADIENT INTERVAL = .00/ 12.00

ALPHAO	DZ	MACH	DX	DY	BETAO	PHI	ALPHAW	BETA	CL	CD	CLM
10.405	-1.205	.59940	10.77730	1.90140	.03370	.00000	5.86870	-4.98130	.42240	.08840	.01500
10.394	1.344	.60020	10.60790	1.91000	.02940	.00000	5.86910	-4.97040	.42120	.08830	.02550
10.395	6.229	.60060	10.27400	1.93450	.02040	.00000	5.86640	-4.96980	.42840	.09020	.01310
10.414	13.845	.60080	9.74720	1.95870	.01170	.00000	5.86110	-4.97800	.44270	.09190	-.00680
10.432	28.880	.60030	8.71070	1.97770	.00290	.00000	5.85270	-4.97890	.46610	.09380	-.03090
10.441	43.758	.59900	7.68350	1.98520	.00130	.00000	5.84450	-4.98020	.48280	.09440	-.04280
10.445	48.107	.60080	7.38000	1.98680	.00000	.00000	5.84530	-4.97980	.48690	.09440	-.04490
	GRADIENT	.00008	-.06835	.00502	-.00184	.00000	-.00055	.00012	.00147	.00039	-.00254

RUN NO. 688/ 0 RN/L = 3.26 GRADIENT INTERVAL = .00/ 12.00

ALPHAO	DZ	MACH	DX	DY	BETAO	PHI	ALPHAW	BETA	CL	CD	CLM
14.748	1.142	.60040	9.54500	1.81420	.02050	.00000	5.75210	-4.94670	.34000	.07760	.15130
14.723	4.240	.59970	9.34440	1.81850	.01890	.00000	5.75270	-4.95250	.34400	.07890	.13860
14.719	8.654	.59970	9.05210	1.84460	.01430	.00000	5.74690	-4.97690	.35390	.08210	.11880
14.719	16.242	.59940	8.54770	1.86060	.00800	.00000	5.73890	-4.97240	.37590	.08660	.07520
14.721	31.044	.59950	7.56580	1.88230	.00080	.00000	5.72550	-4.98170	.41290	.09070	.0225[illegible]
14.728	46.344	.59940	6.54430	1.88790	-.00130	.00000	5.71610	-4.98100	.43830	.09220	-.0[illegible]30
14.727	60.991	.59900	5.56340	1.90280	-.00830	.00000	5.70940	-4.98780	.45630	.09280	-.[illegible]370
	GRADIENT	-.00009	-.06566	.00417	-.00084	.00000	-.00073	-.00411	.00188	.00061	-.00434

CA20 747/1 01 S1 CARRIER DATA (RGN064) (01 DEC 75)

REFERENCE DATA

SREF =	5500.0000 SQ.FT.	XMRP =	1339.9000 IN.XC
LREF =	327.7800 IN.	YMRP =	.0000 IN.YC
BREF =	2348.0400 IN.	ZMRP =	190.8000 IN.ZC
SCALE =	.0300		

PARAMETRIC DATA

ALPHAC =	4.000	BETAC =	-5.000
ELV-IB =	.000	ELV-OB =	3.000
ELEVON =	5.000	MACH =	.600
BETAO =	.000	PHI =	.000
DX =	20.000	DY =	.000

RUN NO. 670/ 0 RN/L = 3.30 GRADIENT INTERVAL = .00/ 12.00

ALPHAO	DZ	MACH	DX	DY	BETAO	PHI	ALPHAW	BETA	CL	CD	CLM
10.318	3.700	.60010	20.41600	2.83640	.02060	.00000	5.84730	-4.99440	.43720	.08920	.01000
10.322	8.553	.59970	20.22210	2.83310	.01590	.00000	5.84340	-4.98620	.44120	.08970	.00170
10.343	11.191	.60090	19.89920	2.84400	.01170	.00000	5.84120	-4.99390	.44750	.09100	-.00830
10.354	18.631	.59990	19.38810	2.84640	.00640	.00000	5.83970	-4.98650	.45780	.09220	-.02150
10.379	33.918	.60090	18.33430	2.85720	.00180	.00000	5.83370	-4.98860	.47490	.09380	-.03890
10.398	48.230	.60020	17.34840	2.86390	-.00110	.00000	5.82690	-4.98840	.48730	.09410	-.04530
	GRADIENT	.00012	-.06905	.00114	-.00116	.00000	-.00078	-.00010	.00137	.00024	-.00242

RUN NO. 671/ 0 RN/L = 3.30 GRADIENT INTERVAL = .00/ 12.00

ALPHAO	DZ	MACH	DX	DY	BETAO	PHI	ALPHAW	BETA	CL	CD	CLM
14.501	7.815	.60010	18.90670	2.72590	.01240	.00000	5.86040	-4.98530	.39000	.08230	.11240
14.504	11.048	.60020	18.69440	2.72740	.00960	.00000	5.85980	-4.98560	.39780	.08450	.09130
14.508	15.518	.60040	18.37820	2.73100	.00590	.00000	5.85870	-4.98820	.40740	.08660	.07160
14.516	22.987	.60090	17.86830	2.73860	.00130	.00000	5.85070	-4.98950	.42290	.08910	.04110
14.524	38.017	.59990	16.83330	2.74690	.00110	.00000	5.84180	-4.98930	.44710	.09160	.00640
14.529	52.676	.60080	15.82050	2.76460	-.00420	.00000	5.83510	-4.98920	.46540	.09270	-.01500
14.527	68.431	.60030	14.73000	2.77580	-.01160	.00000	5.83000	-4.98810	.47890	.09340	-.03430
	GRADIENT	.00003	-.06877	.00046	-.00087	.00000	-.00019	-.00040	.00241	.00068	-.00653

DATE 01 DEC 75 TABULATED SOURCE DATA - CA20

CA20 747/1 01 51 CARRIER DATA (RGN065) (01 DEC 75)

REFERENCE DATA

SREF = 5500.0000 SQ.FT. XMRP = 1339.9000 IN.XC
LREF = 327.7800 IN. YMRP = .0000 IN.YC
BREF = 2348.0400 IN. ZMRP = 190.8000 IN.ZC
SCALE = .0300

PARAMETRIC DATA

ALPHAC =	8.000	BETAC =	-5.000
ELV-IB =	.000	ELV-OB =	3.000
ELEVON =	5.000	MACH =	.800
BETAO =	.000	PHI =	.000
DX =	.000	DY =	.000

RUN NO. 650/ 0 RN/L = 3.23 GRADIENT INTERVAL = .00/ 12.00

ALPHAO	DZ	MACH	DX	DY	BETAO	PHI	ALPHAW	BETA	CL	CD	CLM
10.285	-2.880	.59910	-.69300	.97220	.09130	.00000	9.73440	-4.98470	.78130	.14190	-.11190
10.303	.275	.59920	-1.10310	1.02140	.06460	.00000	9.73380	-4.98020	.77560	.14030	-.09850
10.329	4.787	.59920	-1.71740	1.07390	.03930	.00000	9.73230	-4.98730	.77970	.14050	-.09938
10.366	12.206	.59950	-2.73470	1.11610	.01850	.00000	9.72900	-4.97920	.78900	.14160	-.10160
10.440	27.766	.59990	-4.89330	1.15250	-.00010	.00000	9.72430	-4.97340	.80960	.14380	-.09920
10.469	42.705	.60000	-6.96630	1.16390	-.00170	.00000	9.71690	-4.99020	.82440	.14500	-.09810
10.475	47.740	.59940	-7.66500	1.16600	-.00340	.00000	9.71310	-4.97990	.82890	.14530	-.09770
	GRADIENT	.00000	-.13613	.01163	-.00561	.00000	-.00033	-.00157	.00091	.00004	-.00018

RUN NO. 651/ 0 RN/L = 3.22 GRADIENT INTERVAL = .00/ 12.00

ALPHAO	DZ	MACH	DX	DY	BETAO	PHI	ALPHAW	BETA	CL	CD	CLM
14.666	-.982	.60030	-2.00400	.90170	.06040	.00000	9.76620	-4.94790	.68450	.12500	-.00378
14.656	2.094	.60050	-2.41440	.94080	.04440	.00000	9.76530	-4.94600	.68670	.12610	-.00600
14.666	6.577	.60090	-3.02330	.98050	.02720	.00000	9.75850	-4.94030	.69980	.12890	-.02230
14.686	14.365	.60070	-4.09400	1.02280	.01090	.00000	9.75280	-4.98110	.72240	.13270	-.04580
14.713	29.395	.60010	-6.16750	1.06310	-.00360	.00000	9.73960	-4.98140	.75980	.13710	-.06690
14.725	44.077	.59950	-8.20840	1.07790	-.00530	.00000	9.73030	-4.98880	.78630	.13970	-.07780
	GRADIENT	.00009	-.13582	.00886	-.00384	.00000	-.00152	.00127	.00292	.00062	-.00364

CA20 747/1 01 S1 CARRIER DATA (RGN066) (01 DEC 75)

REFERENCE DATA

SREF =	5500.0000 SQ.FT.	XMRP =	1339.9000 IN.XC		
LREF =	327.7800 IN.	YMRP =	.0000 IN.YC		
BREF =	2348.0400 IN.	ZMRP =	190.8000 IN.ZC		
SCALE =	.0300				

PARAMETRIC DATA

ALPHAC =	8.000	BETAC =	-5.000
ELV-IB =	.000	ELV-OB =	3.000
ELEVON =	5.000	MACH =	.600
BETAO =	.000	PHI =	.000
DX =	10.000	DY =	.000

RUN NO. 690/ 0 RN/L = 3.24 GRADIENT INTERVAL = .00/ 12.00

ALPHAO	DZ	MACH	DX	DY	BETAO	PHI	ALPHAW	BETA	CL	CD	CLM
10.206	-2.705	.59930	9.36200	1.88080	.07970	.00000	9.73680	-4.99820	.80470	.14190	-.12480
10.219	.329	.60060	8.95250	1.90700	.06110	.00000	9.73590	-4.97970	.80070	.14120	-.11260
10.243	4.772	.60000	8.34240	1.94530	.04190	.00000	9.73540	-4.98670	.80180	.14110	-.10910
10.288	12.369	.60000	7.29150	1.99070	.02420	.00000	9.73300	-4.98620	.80870	.14200	-.11010
10.356	27.344	.59990	5.21050	2.01480	.00690	.00000	9.73050	-4.99540	.82310	.14400	-.10530
10.397	42.540	.59940	3.09140	2.02090	.00530	.00000	9.72630	-4.99720	.83540	.14520	-.10160
10.407	48.511	.60000	2.25840	2.02640	.00300	.00000	9.72420	-4.99700	.84120	.14570	-.10240
	GRADIENT	-.00014	-.13734	.00662	-.00432	.00000	-.00011	-.00158	.00025	-.00002	.00079

RUN NO. 689/ 0 RN/L = 3.25 GRADIENT INTERVAL = .00/ 12.00

ALPHAO	DZ	MACH	DX	DY	BETAO	PHI	ALPHAW	BETA	CL	CD	CLM
14.592	-.448	.59960	7.86760	1.78020	.05410	.00000	9.76400	-4.95400	.72880	.12750	-.00010
14.594	2.908	.60010	7.41550	1.81260	.04180	.00000	9.76290	-4.95290	.73170	.12870	-.00680
14.610	7.309	.60030	6.81330	1.84130	.03010	.00000	9.75780	-4.95500	.73990	.13100	-.02130
14.636	14.529	.60000	5.81930	1.88240	.01770	.00000	9.75460	-4.99580	.75540	.13390	-.04450
14.677	29.855	.59980	3.70390	1.90670	.00380	.00000	9.74490	-4.98070	.78260	.13790	-.06630
14.699	44.920	.59970	1.61150	1.92310	.00160	.00000	9.73540	-5.00370	.80310	.14030	-.08040
14.711	59.693	.60060	-.45210	1.93410	-.00650	.00000	9.73180	-4.98710	.81990	.14230	-.08690
	GRADIENT	.00005	-.13584	.00652	-.00266	.00000	-.00116	-.00048	.00186	.00052	-.00329

ORIGINAL PAGE IS
OF POOR QUALITY

CA20 747/1 01 SI CARRIER DATA (RGN067) (01 DEC 75)

REFERENCE DATA

SREF =	5500.0000 SQ.FT.	XMRP =	1339.9000 IN.XC
LREF =	327.7800 IN.	YMRP =	.0000 IN.YC
BREF =	2348.0400 IN.	ZMRP =	190.8000 IN.ZC
SCALE =	.0300		

PARAMETRIC DATA

ALPHAC =	8.000	BETAC =	-5.000
ELV-IB =	.000	ELV-OB =	3.000
ELEVON =	5.000	MACH =	.600
BETAO =	.000	PHI =	.000
DX =	20.000	DY =	.000

RUN NO. 673/ 0 RN/L = 3.28 GRADIENT INTERVAL = .00/ 12.00

ALPHAO	DZ	MACH	DX	DY	BETAO	PHI	ALPHAH	BETA	CL	CD	CLM
10.219	-1.170	.60040	19.17340	2.82560	.05290	.00000	9.73230	-4.99720	.81030	.14190	-.12960
10.227	1.973	.59930	18.74300	2.83210	.03910	.00000	9.73270	-4.98830	.80890	.14110	-.12010
10.253	6.418	.60050	18.12870	2.85480	.02700	.00000	9.73250	-4.99499	.80980	.14190	-.11420
10.286	13.777	.59970	17.11080	2.87030	.01650	.00000	9.73000	-4.98660	.81710	.14280	-.11230
10.356	28.938	.60080	14.99660	2.88840	.00590	.00000	9.72870	-4.98820	.82830	.14500	-.10350
10.397	44.164	.59940	12.87230	2.89650	.00370	.00000	9.72290	-4.98800	.83860	.14580	-.10090
10.406	49.620	.59970	12.11340	2.89960	.00120	.00000	9.71950	-4.98780	.84180	.14630	-.10220
	GRADIENT	.00027	-.13820	.00511	-.00272	.00000	-.00005	-.00149	.00020	.00018	.00133

RUN NO. 672/ 0 RN/L = 3.28 GRADIENT INTERVAL = .00/ 12.00

ALPHAO	DZ	MACH	DX	DY	BETAO	PHI	ALPHAH	BETA	CL	CD	CLM
14.374	1.887	.59920	17.50970	2.70460	.03430	.00000	9.75470	-4.95350	.75510	.13100	-.00830
14.386	5.002	.59960	17.08360	2.71260	.02630	.00000	9.75110	-4.94660	.75900	.13250	-.01740
14.403	9.317	.60070	16.48890	2.74660	.01890	.00000	9.75120	-4.98660	.76550	.13440	-.02750
14.432	16.929	.60030	15.44000	2.76710	.01050	.00000	9.74480	-4.99620	.77730	.13680	-.04470
14.474	32.128	.60020	13.33650	2.77920	.00190	.00000	9.73740	-4.98890	.79920	.14010	-.06180
14.499	46.955	.60020	11.26920	2.78500	-.00180	.00000	9.73650	-4.98890	.81340	.14220	-.07460
14.362	60.738	.60070	9.37410	2.79800	-.00980	.00000	9.72720	-4.99790	.82690	.14400	-.08500
	GRADIENT	.00021	-.13741	.00579	-.00205	.00000	-.00044	-.00475	.00141	.00046	-.00257

CA20 747/1 01 S1 CARRIER DATA (RGN068) (01 DEC 75)

REFERENCE DATA

SREF =	5500.0000 SQ.FT.	XMRP =	1339.9000 IN.XC
LREF =	327.7800 IN.	YMRP =	.0000 IN.YC
BREF =	2348.0400 IN.	ZMRP =	190.8000 IN.ZC
SCALE =	.0300		

PARAMETRIC DATA

ALPHAC =	4.000	BETAC =	-5.000
ELV-IB =	.000	ELV-OB =	3.000
ELEVON =	5.000	MACH =	.600
BETAO =	.000	PHI =	.000
DX =	.000	DY =	10.000

RUN NO. 776/ 0 RN/L = 3.29 GRADIENT INTERVAL = .00/ 12.00

ALPHAO	DZ	MACH	DX	DY	BETAO	PHI	ALPHAH	BETA	CL	CD	CLM
10.526	-1.143	.60050	.82500	11.02580	.03330	.00000	5.82390	-4.98300	.39610	.09110	-.04290
10.516	1.191	.59940	.66590	11.02200	.03310	.00000	5.82210	-4.98350	.40140	.09170	-.04050
10.514	5.570	.59990	.36930	11.02810	.02930	.00000	5.81590	-4.98570	.41350	.09310	-.04010
10.520	13.286	.59990	-.15620	11.04100	.01980	.00000	5.81020	-4.97390	.43060	.09450	-.04010
10.530	28.364	.59970	-1.18290	11.06950	.00500	.00000	5.80160	-4.99410	.45630	.09550	-.04370
10.538	43.310	.60020	-2.20400	11.08460	-.00370	.00000	5.79490	-4.99160	.47440	.09530	-.05110
10.538	47.055	.60050	-2.45960	11.08530	-.00430	.00000	5.79340	-4.99080	.47860	.09530	-.05200
	GRADIENT	.00011	-.06774	.00139	-.00087	.00000	-.00142	-.00059	.00276	.00032	.00009

RUN NO. 782/ 0 RN/L = 3.21 GRADIENT INTERVAL = .00/ 12.00

ALPHAO	DZ	MACH	DX	DY	BETAO	PHI	ALPHAH	BETA	CL	CD	CLM
14.652	1.732	.59990	-.39120	10.90410	.03150	.00000	5.85610	-4.98030	.32570	.08370	.03730
14.836	4.566	.59960	-.58540	10.91290	.03110	.00000	5.85110	-4.98100	.33390	.08420	.03930
14.828	8.860	.59930	-.88970	10.92830	.02600	.00000	5.84790	-4.97830	.35030	.08670	.02530
14.824	16.510	.59970	-1.41720	10.95100	.01650	.00000	5.83890	-4.98390	.37670	.08970	.00820
14.826	31.452	.59940	-2.44000	10.98190	.00210	.00000	5.82350	-4.99490	.41610	.09360	-.01770
14.825	46.606	.59980	-3.48110	11.00070	-.00680	.00000	5.81640	-4.99650	.44140	.09460	-.02480
14.822	61.410	.60010	-4.49630	11.01650	-.01520	.00000	5.80690	-4.99090	.46030	.09440	-.03870
	GRADIENT	-.00007	-.07006	.00341	-.00081	.00000	-.00112	.00031	.00348	.00043	-.00181

CA20 747/1 01 S1 CARRIER DATA (RGNo69) (01 DEC 75)

REFERENCE DATA

SREF = 5500.0000 SQ.FT. XMRP = 1339.9000 IN.XC
LREF = 327.7800 IN. YMRP = .0000 IN.YC
BREF = 2348.0400 IN. ZMRP = 190.8000 IN.ZC
SCALE = .0300

PARAMETRIC DATA

ALPHAC =	4.000	BETAC =	-5.000
ELV-IB =	.000	ELV-OB =	3.000
ELEVON =	5.000	MACH =	.600
BETAO =	.000	PHI =	.000
DX =	10.000	DY =	10.000

RUN NO. 0/ 0 RN/L = 3.24 GRADIENT INTERVAL = .00/ 12.00

ALPHAO	DZ	MACH	DX	DY	BETAO	PHI	ALPHAW	BETA	CL	CD	CLM
10.422	-2.280	.60090	10.86020	11.92480	.02940	.00000	5.86230	-4.99080	.42340	.08990	-.04750
10.405	1.098	.60050	10.63330	11.90880	.03080	.00000	5.86150	-4.99070	.42630	.09050	-.03780
10.409	5.675	.60010	10.31780	11.91340	.02640	.00000	5.85890	-4.99290	.43440	.09220	-.04140
10.422	13.013	.60030	9.81090	11.92200	.01880	.00000	5.85720	-4.98880	.44660	.09360	-.04030
10.450	28.103	.60030	8.76710	11.94740	.00440	.00000	5.84830	-5.00120	.46670	.09520	-.04540
10.460	43.255	.60080	7.71670	11.95920	-.00230	.00000	5.84490	-4.99910	.48200	.09520	-.05120
10.461	46.967	.59980	7.46120	11.96490	-.00590	.00000	5.84130	-4.99850	.48550	.09490	-.05520
	GRADIENT	-.00009	-.06892	.00100	-.00096	.00000	-.00057	-.00048	.00177	.00037	-.00079

RUN NO. 0/ 0 RN/L = 3.24 GRADIENT INTERVAL = .00/ 12.00

ALPHAO	DZ	MACH	DX	DY	BETAO	PHI	ALPHAW	BETA	CL	CD	CLM
14.683	.236	.60030	9.56110	11.80380	.02130	.00000	5.88610	-4.98800	.36440	.08160	.05070
14.666	3.450	.59990	9.34130	11.79350	.02210	.00000	5.88520	-4.98830	.36740	.08170	.05760
14.666	8.165	.59970	9.01260	11.80250	.01790	.00000	5.88170	-4.98550	.37830	.08520	.04130
14.674	15.415	.60030	8.51160	11.82650	.00960	.00000	5.87290	-4.99850	.39760	.08860	.01730
14.676	30.037	.59960	7.49850	11.85690	-.00230	.00000	5.86430	-5.01000	.43030	.09270	-.01170
14.680	45.279	.59970	6.44230	11.87390	-.00980	.00000	5.85630	-5.00350	.45150	.09390	-.02210
14.681	60.620	.60010	5.37930	11.89030	-.01810	.00000	5.84740	-4.99860	.46890	.09400	-.03590
	GRADIENT	-.00007	-.06922	-.00001	-.00046	.00000	-.00057	.00034	.00179	.00048	-.00135

DATE 01 DEC 75 TABULATED SOURCE DATA - CA20

CA20 747/1 01 S1 CARRIER DATA (RGN070) (01 DEC 75)

REFERENCE DATA

SREF = 5500.0000 SQ.FT. XMRP = 1339.9000 IN.XC
LREF = 327.7800 IN. YMRP = .0000 IN.YC
BREF = 2348.0400 IN. ZMRP = 190.8000 IN.ZC
SCALE = .0300

PARAMETRIC DATA

ALPHAC =	8.000	BETAC =	-5.000
ELV-IB =	.000	ELV-OB =	3.000
ELEVON =	5.000	MACH =	.600
BETAO =	.000	PHI =	.000
DX =	.000	DY =	10.000

RUN NO. 779/ 0 RN/L = 3.28 GRADIENT INTERVAL = .00/ 12.00

ALPHAO	DZ	MACH	DX	DY	BETAO	PHI	ALPHAH	BETA	CL	CD	CLM
10.342	-2.449	.60020	-.70020	11.07990	.03430	.00000	9.67310	-4.96870	.76910	.14100	-.14790
10.363	.833	.60030	-1.14560	11.08330	.04050	.00000	9.67390	-4.96980	.77390	.14070	-.14160
10.393	5.429	.60090	-1.77560	11.08390	.03940	.00000	9.67190	-4.97940	.76050	.14100	-.13500
10.426	12.730	.60070	-2.77410	11.07080	.03250	.00000	9.66910	-4.98290	.78980	.14200	-.12170
10.479	27.999	.60040	-4.87390	11.05480	.01510	.00000	9.66510	-4.98470	.80900	.14300	-.10790
10.511	42.823	.60060	-6.92000	11.11030	.00500	.00000	9.65760	-4.98200	.82390	.14420	-.10690
10.514	46.832	.60000	-7.47470	11.11160	.00260	.00000	9.65660	-4.97380	.82660	.14420	-.10720
	GRADIENT	.00013	-.13709	.00013	-.00024	.00000	-.00044	-.00209	.00144	.00007	.00144

RUN NO. 786/ 0 RN/L = 3.19 GRADIENT INTERVAL = .00/ 12.00

ALPHAO	DZ	MACH	DX	DY	BETAO	PHI	ALPHAH	BETA	CL	CD	CLM
14.727	.224	.59910	-2.11200	10.95930	.03290	.00000	9.69510	-4.97390	.68110	.12660	-.06260
14.734	3.279	.60060	-2.52880	10.95100	.03560	.00000	9.69350	-4.97670	.69310	.12860	-.06430
14.749	7.626	.60090	-3.12530	10.95380	.03220	.00000	9.68840	-4.98000	.70840	.13070	-.07370
14.763	15.024	.60020	-4.13640	10.96820	.02370	.00000	9.69090	-4.97890	.73140	.13380	-.08110
14.754	30.355	.60080	-6.23900	10.99580	.00990	.00000	9.67220	-5.00080	.76510	.13800	-.08280
14.789	45.083	.59910	-8.26830	11.02160	-.00320	.00000	9.66110	-4.97740	.78860	.13990	-.09010
14.813	60.285	.60050	-10.37530	11.04200	-.01020	.00000	9.65630	-4.97420	.80820	.14180	-.09590
	GRADIENT	.00023	-.13709	-.00065	-.00014	.00000	-.00092	-.00082	.00368	.00055	-.00155

ORIGINAL PAGE IS
OF POOR QUALITY

CA20 747/1 01 S1 CARRIER DATA (RGN071) (01 DEC 75)

REFERENCE DATA

SREF =	5500.0000 SQ.FT.	XMRP =	1339.9000 IN.XC		
LREF =	327.7800 IN.	YMRP =	.0000 IN.YC		
BREF =	2348.0400 IN.	ZMRP =	190.8000 IN.ZC		
SCALE =	.0300				

PARAMETRIC DATA

ALPHAC =	8.000	BETAC =	-5.000
ELV-IB =	.000	ELV-OB =	3.000
ELEVON =	5.000	MACH =	.600
BETAO =	.000	PHI =	.000
DX =	10.000	DY =	10.000

RUN NO. 740/ 0 RN/L = 3.25 GRADIENT INTERVAL = .00/ 12.00

ALPHAO	DZ	MACH	DX	DY	BETAO	PHI	ALPHAH	BETA	CL	CD	CLM
10.224	-3.964	.59950	9.54340	11.98930	.02010	.00000	9.72770	-4.98500	.79420	.14300	-.15310
10.249	-1.071	.59930	9.14780	11.96350	.03160	.00000	9.72740	-4.99230	.79520	.14260	-.14820
10.273	3.575	.59930	8.51140	11.95450	.03510	.00000	9.72430	-4.99380	.79850	.14270	-.13960
10.307	11.249	.59930	7.45290	11.96080	.03020	.00000	9.72660	-5.00460	.80620	.14370	-.12640
10.375	26.103	.59980	5.39230	11.98210	.01380	.00000	9.72030	-5.00760	.81960	.14540	-.11050
10.407	41.260	.59940	3.28540	11.99630	.00440	.00000	9.71550	-5.00550	.83270	.14610	-.10730
10.427	47.378	.59990	2.42810	11.99460	.00110	.00000	9.71360	-4.99920	.83830	.14640	-.10730
	GRADIENT	-.00000	-.13793	.00082	-.00064	.00000	.00030	-.00141	.00100	.00013	.00172

RUN NO. 741/ 0 RN/L = 3.24 GRADIENT INTERVAL = .00/ 12.00

ALPHAO	DZ	MACH	DX	DY	BETAO	PHI	ALPHAH	BETA	CL	CD	CLM
14.548	-1.395	.59950	8.03360	11.85890	.02640	.00000	9.75250	-4.98160	.72500	.13030	-.05240
14.553	1.311	.60060	7.66380	11.85090	.02930	.00000	9.75100	-4.99080	.72990	.13150	-.05260
14.570	6.124	.60020	7.00200	11.85400	.02630	.00000	9.74500	-5.00250	.74130	.13370	-.06260
14.599	13.813	.59960	5.93860	11.85930	.01810	.00000	9.74180	-5.00110	.75830	.13670	-.07330
14.637	28.016	.60080	3.85530	11.87690	.00400	.00000	9.73430	-5.00730	.78180	.14050	-.07530
14.659	43.625	.60060	1.80890	11.89170	-.00480	.00000	9.72660	-5.00060	.80240	.14240	-.08460
14.669	58.608	.60060	-.28100	11.91350	-.01270	.00000	9.72080	-5.00520	.81810	.14370	-.09260
	GRADIENT	-.00008	-.13750	.00064	-.00062	.00000	-.00125	-.00243	.00237	.00046	-.00208

CA20 747/1 01 S1 CARRIER DATA (RGN072) (01 DEC 75)

REFERENCE DATA

SREF =	5500.0000 SQ.FT.	XMRP =	1339.9000 IN.XC
LREF =	327.7800 IN.	YMRP =	.0000 IN.YC
BREF =	2348.0400 IN.	ZMRP =	190.8000 IN.ZC
SCALE =	.0300		

PARAMETRIC DATA

ALPHAC =	4.000	BETAC =	5.000
ELV-IB =	.000	ELV-OB =	3.000
ELEVON =	5.000	MACH =	.600
BETAO =	.000	PHI =	.000
DX =	.000	DY =	10.000

RUN NO. 777/ 0 RN/L = 3.27 GRADIENT INTERVAL = .00/ 12.00

ALPHAO	DZ	MACH	DX	DY	BETAO	PHI	ALPHAW	BETA	CL	CD	CLM
10.561	-1.260	.60020	.82840	8.80620	.04300	.00000	5.82950	5.04410	.39350	.09100	.07480
10.547	1.334	.60070	.65390	8.81240	.03620	.00000	5.82790	5.04680	.39860	.09140	.06470
10.536	5.878	.60010	.34760	8.81490	.03050	.00000	5.82070	5.02710	.41320	.09220	.03930
10.536	13.042	.60030	-.13900	8.81520	.02440	.00000	5.81370	5.02260	.43260	.09270	.00150
10.541	28.032	.60030	-1.15930	8.82080	.01180	.00000	5.80310	5.03420	.46200	.09340	-.04000
10.562	43.587	.59990	-2.23230	8.83030	.00450	.00000	5.79570	5.03470	.48200	.09330	-.05560
10.545	47.071	.60050	-2.46160	8.83200	.00240	.00000	5.79470	5.03480	.48470	.09340	-.05670
	GRADIENT	-.00013	-.06740	.00055	-.00125	.00000	-.00158	-.00478	.00321	.00018	-.00559

RUN NO. 783/ 0 RN/L = 3.21 GRADIENT INTERVAL = .00/ 12.00

ALPHAO	DZ	MACH	DX	DY	BETAO	PHI	ALPHAW	BETA	CL	CD	CLM
14.885	1.660	.60010	-.39220	8.87450	.03220	.00000	5.86770	5.00070	.30760	.07990	.19760
14.865	4.767	.59920	-.60880	8.88830	.02700	.00000	5.86470	5.01010	.31720	.08160	.18370
14.851	8.930	.59950	-.89480	8.88570	.02380	.00000	5.85730	5.01040	.33880	.08460	.14170
14.843	16.495	.59930	-1.41200	8.90170	.01880	.00000	5.84480	4.99980	.37290	.08870	.07830
14.833	31.538	.60060	-2.44310	8.92270	.00830	.00000	5.82820	4.97960	.41860	.09120	.00760
14.829	46.682	.60030	-3.48380	8.93760	-.00030	.00000	5.81730	4.98730	.44810	.09230	-.02660
14.822	61.660	.59980	-4.51590	8.95050	-.00770	.00000	5.81000	4.99860	.46780	.09310	-.04470
	GRADIENT	-.00007	-.06911	.00142	-.00113	.00000	-.00145	.00126	.00434	.00065	-.00782

CA20 747/1 01 SI CARRIER DATA (RGN073) (01 DEC 75)

REFERENCE DATA

SREF = 5500.0000 SQ.FT. XMRP = 1339.9000 IN.XC
LREF = 327.7800 IN. YMRP = .0000 IN.YC
BREF = 2348.0400 IN. ZMRP = 190.8000 IN.ZC
SCALE = .0300

PARAMETRIC DATA

ALPHAC =	4.000	BETAC =	5.000
ELV-IB =	.000	ELV-OB =	3.000
ELEVON =	5.000	MACH =	.600
BETAO =	.000	PHI =	.000
DX =	10.000	DY =	10.000

RUN NO. 743/ 0 RN/L = 3.24 GRADIENT INTERVAL = .00/ 12.00

ALPHAO	DZ	MACH	DX	DY	BETAO	PHI	ALPHAH	BETA	CL	CD	CLH
10.456	-2.278	.60010	10.85340	7.94940	.03880	.00000	5.86640	5.03030	.42400	.09130	.05470
10.441	.974	.59990	10.63180	7.95910	.03240	.00000	5.86680	5.01890	.42470	.09150	.05510
10.437	5.632	.60000	10.31420	7.96140	.02670	.00000	5.86360	5.00500	.43400	.09210	.03310
10.440	12.947	.60040	9.81390	7.96130	.02090	.00000	5.85810	5.00810	.44920	.09240	-.00210
10.454	28.272	.59990	8.75740	7.96870	.00920	.00000	5.84940	4.99630	.47310	.09280	-.04410
10.462	43.215	.59990	7.72040	7.97210	.00210	.00000	5.84560	5.00410	.46980	.09310	-.05520
10.464	46.952	.60080	7.46360	7.97530	-.00040	.00000	5.84240	5.00430	.49230	.09340	-.05940
	GRADIENT	.00002	-.06818	.00049	-.00122	.00000	-.00112	-.00298	.00200	.00013	-.00472

RUN NO. 746/ 0 RN/L = 3.23 GRADIENT INTERVAL = .00/ 12.00

ALPHAO	DZ	MACH	DX	DY	BETAO	PHI	ALPHAH	BETA	CL	CD	CLH
14.699	.081	.60070	9.56470	8.04510	.01920	.00000	5.89040	5.01680	.34730	.07990	.19920
14.686	3.398	.60090	9.33840	8.04540	.01660	.00000	5.88440	5.01860	.35270	.08160	.18670
14.677	8.089	.59980	9.01750	8.04550	.01310	.00000	5.87840	5.01900	.37020	.08500	.13950
14.677	15.482	.60080	8.51410	8.04890	.00880	.00000	5.86910	5.00690	.39540	.08800	.07790
14.674	30.336	.59920	7.49140	8.06690	.00080	.00000	5.85560	5.00270	.43200	.09030	.00850
14.676	45.437	.59990	6.44350	8.08710	-.00650	.00000	5.84830	4.99500	.45800	.09170	-.02520
14.674	60.598	.59920	5.39480	8.09960	-.01450	.00000	5.83970	5.00380	.47500	.09270	-.04480
	GRADIENT	-.00012	-.06933	.00005	-.00076	.00000	-.00148	.00026	.00292	.00064	-.00763

CA20 747/1 01 S1 CARRIER DATA (RGN074) (01 DEC 75)

REFERENCE DATA

SREF =	5500.0000 SQ.FT.	XMRP =	1339.9000 IN.XC
LREF =	327.7800 IN.	YMRP =	.0000 IN.YC
BREF =	2348.0400 IN.	ZMRP =	190.8000 IN.ZC
SCALE =	.0300		

PARAMETRIC DATA

ALPHAC =	8.000	BETAC =	5.000
ELV-IB =	.000	ELV-OB =	3.000
ELEVON =	5.000	MACH =	.600
BETAO =	.000	PHI =	.000
DX =	.000	DY =	10.000

RUN NO. 778/ 0 RN/L = 3.27 GRADIENT INTERVAL = .00/ 12.00

ALPHAO	DZ	MACH	DX	DY	BETAO	PHI	ALPHAW	BETA	CL	CD	CLM
10.386	-2.569	.60000	-.67920	8.78930	.04720	.00000	9.67710	5.05610	.77390	.14230	-.09408
10.392	.494	.59990	-1.09610	8.79940	.03450	.00000	9.67430	5.04960	.78290	.14130	-.09350
10.404	5.444	.59920	-1.77530	8.79830	.02930	.00000	9.67330	5.02910	.78680	.14050	-.10020
10.446	12.879	.60080	-2.79560	8.78530	.02760	.00000	9.67050	5.02490	.79560	.14090	-.11010
10.484	27.855	.60070	-4.85200	8.77840	.01750	.00000	9.66630	5.03890	.81420	.14280	-.11980
10.507	42.765	.60090	-6.91030	8.78230	.01070	.00000	9.65900	5.03990	.82280	.14480	-.11940
10.510	46.810	.59970	-7.47130	8.78620	.00720	.00000	9.66000	5.04000	.83220	.14530	-.12240
	GRADIENT	-.00014	-.13720	-.00063	-.00105	.00000	-.00020	-.00414	.00079	-.00016	-.00135

RUN NO. 785/ 0 RN/L = 3.20 GRADIENT INTERVAL = .00/ 12.00

ALPHAO	DZ	MACH	DX	DY	BETAO	PHI	ALPHAW	BETA	CL	CD	CLM
14.769	.421	.60000	-2.15370	8.90200	.01960	.00000	9.69950	5.01650	.69250	.12680	.01280
14.783	3.277	.60030	-2.53970	8.89780	.01780	.00000	9.69440	5.00270	.70200	.12780	.00180
14.765	7.611	.60040	-3.12710	8.89370	.01750	.00000	9.68640	4.99570	.71870	.12950	-.03170
14.776	14.897	.59960	-4.11930	8.88850	.01660	.00000	9.67900	5.00080	.73950	.13150	-.06750
14.801	30.085	.60030	-6.19610	8.88980	.01090	.00000	9.66900	4.99280	.76850	.13630	-.09210
14.812	45.241	.60060	-8.28580	8.87710	.00540	.00000	9.66320	4.99950	.79150	.14030	-.10180
14.809	60.161	.60050	-10.35530	8.90350	-.00530	.00000	9.65980	4.99330	.80730	.14280	-.10840
	GRADIENT	.00005	-.13540	-.00260	-.00027	.00000	-.00182	-.00266	.00366	.00038	-.00631

ORIGINAL PAGE IS
OF POOR QUALITY

CA20 747/1 01 S1 CARRIER DATA (RGN075) (01 DEC 75)

REFERENCE DATA

SREF = 5500.0000 SQ.FT. XMRP = 1339.9000 IN.XC
LREF = 327.7800 IN. YMRP = .0000 IN.YC
BREF = 2348.0400 IN. ZMRP = 190.8000 IN.ZC
SCALE = .0300

PARAMETRIC DATA

ALPHAC = 8.000 BETAC = 5.000
ELV-IB = .000 ELV-OB = 3.000
ELEVON = 5.000 MACH = .600
BETAO = .000 PHI = .000
DX = 10.000 DY = 10.000

RUN NO. 744/ 0 RN/L = 3.24 GRADIENT INTERVAL = .00/ 12.00

ALPHAO	DZ	MACH	DX	DY	BETAO	PHI	ALPHAH	BETA	CL	CD	CLM
10.291	-4.285	.59980	9.60240	7.92050	.05400	.00000	9.71810	5.02020	.79770	.14730	-.10940
10.284	-1.016	.60000	9.14600	7.93820	.03580	.00000	9.72130	5.02130	.79710	.14590	-.10120
10.296	3.234	.60030	8.56250	7.93260	.03000	.00000	9.71979	5.02420	.79920	.14510	-.10310
10.325	10.653	.60020	7.54070	7.92720	.02590	.00000	9.71900	5.01130	.80560	.14470	-.11040
10.391	26.076	.59950	5.40030	7.92620	.01500	.00000	9.71380	5.00840	.82110	.14600	-.12050
10.421	40.921	.60020	3.33920	7.93180	.00830	.00000	9.70970	5.00110	.83300	.14740	-.11960
10.429	47.391	.59990	2.44250	7.93360	.00400	.00000	9.70550	5.00900	.83840	.14820	-.12130
	GRADIENT	-.00009	-.13773	-.00073	-.00057	.00000	.00004	-.00174	.00086	-.00005	-.00098

RUN NO. 745/ 0 RN/L = 3.23 GRADIENT INTERVAL = .00/ 12.00

ALPHAO	DZ	MACH	DX	DY	BETAO	PHI	ALPHAH	BETA	CL	CD	CLM
14.583	-1.882	.60010	8.09210	8.06760	.01710	.00000	9.74680	5.02630	.72630	.13180	.02370
14.579	1.393	.59950	7.64570	8.06130	.01580	.00000	9.74410	5.01250	.72850	.13180	.01130
14.585	5.736	.60040	7.05370	8.04400	.01390	.00000	9.74010	5.01420	.74030	.13300	-.01840
14.601	12.961	.60040	6.06200	8.03060	.01140	.00000	9.73450	5.00960	.75640	.13430	-.05020
14.629	28.063	.59950	3.97810	8.02230	.00320	.00000	9.72720	5.00640	.78340	.13730	-.08660
14.652	42.937	.60070	1.91620	8.02770	-.00220	.00000	9.71930	4.99980	.80560	.14100	-.09950
14.659	57.817	.59950	-.15670	8.04120	-.00950	.00000	9.71390	5.00110	.82050	.14320	-.10680
	GRADIENT	.00021	-.13630	-.00398	-.00044	.00000	-.00092	.00039	.00272	.00028	-.00584

CA20 747/1 01 S1 CARRIER DATA (RGN076) (01 DEC 75)

REFERENCE DATA

SREF = 5500.0000 SQ.FT. XMRP = 1339.9000 IN.XC
LREF = 327.7800 IN. YMRP = .0000 IN.YC
BREF = 2348.0400 IN. ZMRP = 190.8000 IN.ZC
SCALE = .0300

PARAMETRIC DATA

ALPHAC =	4.000	BETAC =	-5.000
ELV-IB =	.000	ELV-OB =	3.000
ELEVON =	5.000	MACH =	.600
BETAO =	.000	PHI =	7.500
DX =	.000	DY =	.000

RUN NO. 700/ 0 RN/L = 3.24 GRADIENT INTERVAL = .00/ 12.00

ALPHAO	DZ	MACH	DX	DY	BETAO	PHI	ALPHAW	BETA	CL	CD	CLM
10.498	-1.277	.59980	.83250	1.15460	.36450	7.50000	5.83850	-5.05480	.39350	.08930	.03760
10.489	2.021	.60000	.61190	1.18340	.35490	7.50000	5.83680	-5.04370	.39790	.08960	.04000
10.492	6.318	.60080	.32120	1.21560	.34590	7.50000	5.83320	-5.04780	.40690	.09080	.03010
10.500	13.726	.60020	-.18460	1.24350	.33660	7.50000	5.82810	-5.04000	.42690	.09250	.00240
10.510	28.683	.60070	-1.20160	1.27850	.32710	7.50000	5.81510	-5.04710	.45610	.09400	-.02630
10.516	43.777	.60040	-2.23760	1.28820	.32620	7.50000	5.80850	-5.04020	.47470	.09430	-.03940
10.513	47.275	.59920	-2.47710	1.29290	.32410	7.50000	5.80680	-5.04010	.47900	.09440	-.04480
	GRADIENT	.00019	-.06765	.00749	-.00212	.00000	-.00084	-.00095	.00209	.00023	-.00230

RUN NO. 699/ 0 RN/L = 3.25 GRADIENT INTERVAL = .00/ 12.00

ALPHAO	DZ	MACH	DX	DY	BETAO	PHI	ALPHAW	BETA	CL	CD	CLM
14.757	1.908	.59900	-.38000	1.14030	.90370	7.50000	5.86610	-5.05330	.31740	.08050	.13600
14.746	4.533	.59970	-.55980	1.15770	.89700	7.50000	5.86300	-5.04270	.32590	.08280	.12770
14.741	9.069	.59940	-.87360	1.17880	.89010	7.50000	5.85990	-5.04130	.34050	.08480	.10970
14.736	16.707	.59980	-1.39380	1.20160	.88280	7.50000	5.84940	-5.04330	.36960	.08890	.06820
14.734	31.718	.60020	-2.41740	1.22950	.87480	7.50000	5.83020	-5.04070	.41500	.09200	.01480
14.739	46.644	.59920	-3.44230	1.23390	.87190	7.50000	5.81970	-5.04800	.44360	.09320	-.01290
14.739	61.610	.60030	-4.47430	1.24610	.86560	7.50000	5.81480	-5.03960	.46330	.09360	-.03060
	GRADIENT	.00004	-.06875	.00528	-.00185	.00000	-.00084	.00152	.00322	.00058	-.00369

ORIGINAL PAGE IS
OF POOR QUALITY

DATE 01 DEC 75 TABULATED SOURCE DATA - CA20

CA20 747/1 01 S1 CARRIER DATA (RGN077) (01 DEC 75)

REFERENCE DATA

SREF = 5500.0000 SQ.FT. XMRP = 1339.9000 IN.XC
LREF = 327.7800 IN. YMRP = .0000 IN.YC
BREF = 2348.0400 IN. ZMRP = 190.8000 IN.ZC
SCALE = .0300

PARAMETRIC DATA

ALPHAC =	4.000	BETAC =	-5.008
ELV-IB =	.000	ELV-OB =	3.000
ELEVON =	5.000	MACH =	.600
BETAO =	.000	PHI =	7.500
DX =	10.000	DY =	.000

RUN NO. 679/ 0 RN/L = 3.29 GRADIENT INTERVAL = .00/ 12.00

ALPHAO	DZ	MACH	DX	DY	BETAO	PHI	ALPHAH	BETA	CL	CD	CLH
10.372	-2.105	.60020	10.86710	2.01610	.34580	7.50000	5.85010	-5.00500	.42510	.08930	.01220
10.367	1.060	.59990	10.65570	2.02110	.34160	7.50000	5.84920	-4.98530	.42090	.08900	.02860
10.367	5.691	.60070	10.34240	2.05170	.33240	7.50000	5.84990	-4.98100	.42450	.09000	.02740
10.389	13.253	.60030	9.82060	2.09120	.32670	7.50000	5.84450	-4.98760	.43900	.09200	.00250
10.411	28.269	.60010	8.76950	2.11400	.31800	7.50000	5.83790	-4.98730	.46310	.09350	-.02330
10.422	43.330	.59980	7.75290	2.12730	.31760	7.50000	5.82940	-4.98850	.48040	.09420	-.03980
10.423	48.502	.59940	7.39550	2.13120	.31640	7.50000	5.82760	-4.98840	.48520	.09420	-.04450
	GRADIENT	.00017	-.06766	.00661	-.00199	.00000	.00015	.00093	.00078	.00022	-.00026

RUN NO. 680/ 0 RN/L = 3.28 GRADIENT INTERVAL = .00/ 12.00

ALPHAO	DZ	MACH	DX	DY	BETAO	PHI	ALPHAH	BETA	CL	CD	CLH
14.684	.874	.60040	9.54560	1.96400	.89390	7.50000	5.87640	-4.96580	.35460	.07870	.15270
14.667	4.232	.60010	9.31860	1.98550	.88800	7.50000	5.87720	-4.96930	.35780	.08060	.14240
14.662	8.405	.60050	9.03360	2.01180	.88290	7.50000	5.87440	-4.98210	.36510	.08290	.13080
14.663	16.057	.60090	8.51080	2.03990	.87710	7.50000	5.86600	-4.99860	.38790	.08730	.08080
14.668	30.959	.59980	7.48720	2.05970	.87070	7.50000	5.85230	-4.98160	.42430	.09080	.02460
14.672	45.936	.59930	6.45680	2.06910	.86860	7.50000	5.84070	-4.98100	.44960	.09270	-.00690
14.683	61.178	.59910	5.39730	2.08060	.86400	7.50000	5.83590	-4.98820	.46880	.09300	-.02580
	GRADIENT	.00002	-.06800	.00635	-.00145	.00000	-.00028	-.00220	.00141	.00056	-.00290

DATE 01 DEC 75 TABULATED SOURCE DATA - CA20

CA20 747/1 01 SI CARRIER DATA (RGN078) (01 DEC 75)

REFERENCE DATA

SREF = 5500.0000 SQ.FT. XMRP = 1339.9000 IN.XC
LREF = 327.7800 IN. YMRP = .0000 IN.YC
BREF = 2348.0400 IN. ZMRP = 190.8000 IN.ZC
SCALE = .0300

PARAMETRIC DATA

ALPHAC =	8.000	BETAC =	-5.000
ELV-IB =	.000	ELV-OB =	3.000
ELEVON =	5.000	MACH =	.600
BETAO =	.000	PHI =	7.500
DX =	.000	DY =	.000

RUN NO. 701/ 0 RN/L = 3.22 GRADIENT INTERVAL.= .00/ 12.00

ALPHAO	DZ	MACH	DX	DY	BETAO	PHI	ALPHAW	BETA	CL	CD	CLM
10.301	-1.522	.59970	-.83310	1.08330	.39300	7.50000	9.69190	-5.04570	.77830	.14090	-.09880
10.323	1.720	.59990	-1.27100	1.13320	.37340	7.50000	9.69140	-5.04160	.77890	.14000	-.09190
10.358	6.033	.60060	-1.66180	1.18510	.35640	7.50000	9.69140	-5.04760	.78500	.14040	-.09510
10.398	15.289	.59980	-3.12410	1.24460	.33730	7.50000	9.68470	-5.03900	.79740	.14160	-.09930
10.452	28.550	.60080	-4.95350	1.29230	.32740	7.50000	9.68130	-5.04800	.81410	.14310	-.09780
10.485	43.635	.59990	-7.04370	1.31350	.32720	7.50000	9.67630	-5.04730	.82840	.14480	-.10030
10.490	47.135	.60050	-7.52840	1.31640	.32660	7.50000	9.67520	-5.03940	.83150	.14510	-.10090
	GRADIENT	.00016	-.13697	.01203	-.00394	.00000	.00000	-.00139	.00141	.00009	-.00074

RUN NO. 698/ 0 RN/L = 3.31 GRADIENT INTERVAL = .00/ 12.00

ALPHAO	DZ	MACH	DX	DY	BETAO	PHI	ALPHAW	BETA	CL	CD	CLM
14.639	1.551	.60080	-2.26150	1.07140	.92630	7.50000	9.67920	-5.05090	.69300	.12540	-.00290
14.646	4.440	.59940	-2.65160	1.10830	.91390	7.50000	9.67710	-5.04860	.69840	.12640	-.00770
14.662	9.007	.60060	-3.26780	1.14300	.90190	7.50000	9.67380	-5.02670	.71400	.12910	-.02940
14.679	16.752	.60000	-4.31660	1.19170	.88750	7.50000	9.66390	-5.05080	.73550	.13190	-.05140
14.701	31.550	.60040	-6.33690	1.23600	.87700	7.50000	9.64870	-5.03090	.77100	.13580	-.07650
14.713	46.466	.60000	-8.39580	1.26140	.87320	7.50000	9.64450	-5.04770	.79610	.13910	-.08630
14.722	61.470	.60040	-10.46660	1.28150	.86640	7.50000	9.63820	-5.04710	.81410	.14120	-.09420
	GRADIENT	-.00000	-.13496	.00942	-.00321	-.00000	-.00072	.00339	.00287	.00050	-.00366

CA20 747/1 01 S1 CARRIER DATA (RGN079) (01 DEC 75)

REFERENCE DATA

SREF = 5500.0000 SQ.FT. XMRP = 1339.9000 IN.XC
LREF = 327.7800 IN. YMRP = .0000 IN.YC
BREF = 2348.0400 IN. ZMRP = 190.8000 IN.ZC
SCALE = .0300

PARAMETRIC DATA

ALPHAC = 8.000 BETAC = -5.000
ELV-IB = .000 ELV-OB = 3.000
ELEVON = 5.000 MACH = .600
BETAO = .000 PHI = 7.500
DX = 10.000 DY = .000

RUN NO. 682/ 0 RN/L = 3.27 GRADIENT INTERVAL = .00/ 12.00

ALPHAO	DZ	MACH	DX	DY	BETAO	PHI	ALPHAH	BETA	CL	CD	CLM
10.182	-3.146	.59980	9.44330	1.93780	.37820	7.50000	9.72010	-4.99620	.80170	.14290	-.13058
10.201	-.191	.60050	9.04330	1.97280	.36380	7.50000	9.72230	-4.99230	.79510	.14160	-.10830
10.223	4.382	.60020	8.42140	2.02160	.34460	7.50000	9.72000	-4.98760	.79440	.14110	-.09918
10.263	11.935	.60030	7.38160	2.06880	.32870	7.50000	9.71950	-4.97890	.80210	.14220	-.10240
10.337	26.849	.59930	5.31290	2.12680	.31790	7.50000	9.71460	-4.99590	.81680	.14380	-.10060
10.377	42.008	.60020	3.20820	2.14560	.31730	7.50000	9.70990	-4.98020	.83070	.14530	-.09790
10.386	48.909	.60000	2.23740	2.15750	.31550	7.50000	9.71490	-4.98770	.83570	.14570	-.09920
	GRADIENT	.00001	-.13767	.00614	-.00211	.00000	-.00007	.00115	.00102	.00015	-.00044

RUN NO. 681/ 0 RN/L = 3.27 GRADIENT INTERVAL = .00/ 12.00

ALPHAO	DZ	MACH	DX	DY	BETAO	PHI	ALPHAH	BETA	CL	CD	CLM
14.540	-.899	.60080	7.97090	1.87070	.91980	7.50000	9.74650	-4.97150	.72950	.12950	-.00140
14.539	1.681	.60070	7.62670	1.90420	.90820	7.50000	9.74960	-4.96080	.72670	.12930	.00900
14.550	6.191	.59980	7.01630	1.94450	.89580	7.50000	9.74300	-4.94870	.73140	.13040	.00140
14.577	13.668	.60030	5.99450	2.00570	.88320	7.50000	9.73710	-4.98970	.74790	.13340	-.02720
14.626	28.859	.60080	3.90510	2.06670	.86940	7.50000	9.72640	-4.99530	.77730	.13740	-.05860
14.654	43.807	.60030	1.83050	2.08630	.86880	7.50000	9.72090	-4.98830	.79930	.14030	-.07440
14.668	58.633	.59980	-.23580	2.09830	.86650	7.50000	9.71490	-4.98000	.81620	.14220	-.08490
	GRADIENT	-.00020	-.13535	.00894	-.00275	-.00000	-.00146	.00268	.00104	.00024	-.00169

CA20 747/1 01 S1 CARRIER DATA (RGN080) (01 DEC 75)

REFERENCE DATA

SREF =	5500.0000 SQ.FT.	XMRP =	1339.9800 IN.XC
LREF =	327.7800 IN.	YMRP =	.0000 IN.YC
BREF =	2348.0400 IN.	ZMRP =	190.8000 IN.ZC
SCALE =	.0300		

PARAMETRIC DATA

ALPHAC =	4.000	BETAC =	-5.000
ELV-IB =	.000	ELV-OB =	3.000
ELEVON =	5.000	MACH =	.600
BETAO =	.000	PHI =	7.500
DX =	.000	DY =	10.000

RUN NO. 791/ 0 RN/L = 3.34 GRADIENT INTERVAL = .00/ 12.00

ALPHAO	DZ	MACH	DX	DY	BETAO	PHI	ALPHAW	BETA	CL	CD	CLM
10.543	.277	.59960	.69350	11.14360	.36720	7.50000	5.84270	-4.98690	.40280	.09290	-.04320
10.537	3.154	.59930	.49810	11.15020	.36560	7.50000	5.84120	-4.97990	.40770	.09310	-.03370
10.543	7.602	C0010	.19640	11.16160	.36070	7.50000	5.83540	-4.97360	.41830	.09400	-.03320
10.546	14.948	.59920	-.30580	11.18100	.35240	7.50000	5.83280	-4.98370	.43300	.09490	-.03280
10.563	30.456	.60020	-1.35340	11.21710	.33670	7.50000	5.82120	-4.98510	.45950	.09550	-.03340
10.569	45.266	.59930	-2.39270	11.23800	.33050	7.50000	5.81720	-4.98950	.47620	.09540	-.04860
10.573	47.765	.60090	-2.55600	11.24380	.32880	7.50000	5.81590	-4.99680	.48000	.09510	-.04780
	GRADIENT	.00008	-.06782	.00247	-.00091	.00000	-.00102	.00178	.00214	.00015	.00126

RUN NO. 792/ 0 RN/L = 3.33 GRADIENT INTERVAL = .00/ 12.00

ALPHAO	DZ	MACH	DX	DY	BETAO	PHI	ALPHAW	BETA	CL	CD	CLM
14.693	2.686	.60000	-.37990	11.08210	.90280	7.50000	5.87000	-4.98910	.32900	.08480	.06690
14.684	4.700	.60010	-.56200	11.09160	.90090	7.50000	5.87020	-4.98190	.33490	.08520	.06240
14.679	9.002	.60060	-.86020	11.10680	.89490	7.50000	5.86130	-4.98840	.35360	.08750	.04020
14.683	16.383	.60070	-1.37540	11.13310	.88490	7.50000	5.85650	-4.99530	.37500	.09030	.03330
14.691	31.443	.59920	-2.41210	11.16780	.87000	7.50000	5.83990	-4.99270	.41570	.09380	-.00370
14.694	46.592	.59940	-3.45170	11.18970	.86380	7.50000	5.82940	-4.99250	.44330	.09450	-.02050
14.693	61.369	.59950	-4.47680	11.20770	.85570	7.50000	5.82430	-4.98120	.46300	.C 450	-.03700
	GRADIENT	.00009	-.06944	.00357	-.00117	-.00000	-.00134	.00301	.00364	.00040	-.00399

ORIGINAL PAGE IS
OF POOR QUALITY

CA20 747/1 01 S1 CARRIER DATA (RGN081) (01 DEC 75)

REFERENCE DATA

SREF = 5500.0000 SQ.FT. XMRP = 1339.9000 IN.XC
LREF = 327.7800 IN. YMRP = .0000 IN.YC
BREF = 2348.0400 IN. ZMRP = 190.8000 IN.ZC
SCALE = .0300

PARAMETRIC DATA

ALPHAC =	4.000	BETAC =	-5.000
ELV-IB =	.000	ELV-OB =	3.000
ELEVON =	5.000	MACH =	.600
BETAO =	.000	PHI =	7.500
DX =	10.000	DY =	10.000

RUN NO. 752/ 0 RN/L = 3.25 GRADIENT INTERVAL = .00/ 12.00

ALPHAO	DZ	MACH	DX	DY	BETAO	PHI	ALPHAH	BETA	CL	CD	CLM
10.346	-1.602	.60090	10.84680	11.99480	.37630	7.50000	5.85440	-4.97960	.42790	.09080	-.04030
10.345	1.482	.60060	10.63530	12.00080	.37550	7.50000	5.85620	-4.98010	.42970	.09130	-.03590
10.354	5.908	.60020	10.33290	12.01730	.37080	7.50000	5.85220	-4.98920	.43500	.09240	-.03470
10.381	13.318	.60050	9.81780	12.03110	.36550	7.50000	5.84870	-4.98360	.44570	.09370	-.03540
10.403	28.645	.60020	8.76420	12.06720	.35160	7.50000	5.84180	-4.99350	.46590	.09470	-.03960
10.412	43.525	.59940	7.73690	12.08630	.34460	7.50000	5.83600	-4.99070	.48130	.09470	-.05180
10.415	47.221	.60020	7.48460	12.08780	.34240	7.50000	5.83250	-4.98240	.48450	.09460	-.05000
	GRADIENT	-.00009	-.06836	.00373	-.00106	-.00000	-.00090	-.00206	.00120	.00025	.00027

RUN NO. 755/ 0 RN/L = 3.25 GRADIENT INTERVAL = .00/ 12.00

ALPHAO	DZ	MACH	DX	DY	BETAO	PHI	ALPHAH	BETA	CL	CD	CLM
14.608	-.240	.60090	9.64110	11.90700	.92390	7.50000	5.87640	-4.97970	.36840	.08220	.06390
14.598	2.722	.60030	9.43840	11.92140	.92500	7.50000	5.87630	-4.98890	.36940	.08340	.06830
14.593	7.480	.60030	9.11160	11.93390	.92030	7.50000	5.87390	-4.98370	.37660	.08510	.05750
14.598	14.602	.60090	8.62320	11.95990	.91230	7.50000	5.86660	-4.99540	.39180	.08820	.04460
14.613	29.687	.60000	7.57480	12.00060	.89630	7.50000	5.85700	-5.00190	.42580	.09230	.00130
14.617	44.725	.59950	6.53810	12.02150	.88840	7.50000	5.84550	-4.99410	.44970	.09330	-.01620
14.621	59.760	.60020	5.50180	12.03780	.88140	7.50000	5.83640	-4.99030	.46770	.09370	-.03490
	GRADIENT	.00000	-.06868	.00263	-.00099	.00000	-.00050	.00109	.00151	.00036	-.00227

CA20 747/1 01 S1 CARRIER DATA (RGN082) (01 DEC 75)

REFERENCE DATA

SREF =	5500.0000 SQ.FT.	XMRP =	1339.9000 IN.XC
LREF =	327.7800 IN.	YMRP =	.0000 IN.YC
BREF =	2348.0400 IN.	ZMRP =	190.8000 IN.ZC
SCALE =	.0300		

PARAMETRIC DATA

ALPHAC =	8.000	BETAC =	-5.000
ELV-IB =	.000	ELV-OB =	3.000
ELEVON =	5.000	MACH =	.600
BETAD =	.000	PHI =	7.500
DX =	.000	DY =	10.000

RUN NO. 798/ 0 RN/L = 3.28 GRADIENT INTERVAL = .00/ 12.00

ALPHAO	DZ	MACH	DX	DY	BETAO	PHI	ALPHAW	BETA	CL	CD	CLM
10.341	-.270	.60070	-1.00870	11.14970	.35700	7.50000	9.65950	-4.98570	.77570	.14180	-.14330
10.486	.652	.59920	-1.21140	11.14280	.37710	7.50000	9.65970	-4.98610	.77500	.14160	-.14330
10.365	3.053	.59990	-1.45750	11.15070	.36160	7.50000	9.65670	-4.97910	.77780	.14120	-.13370
10.389	7.538	.59900	-2.06910	11.16310	.36060	7.50000	9.65760	-4.98630	.78230	.14130	-.12390
10.427	14.849	.60020	-3.06390	11.18630	.35350	7.50000	9.65440	-4.99010	.79270	.14200	-.11220
10.498	30.104	.59970	-5.16390	11.23050	.34070	7.50000	9.64830	-4.98980	.81040	.14250	-.10350
10.519	44.754	.60050	-7.17650	11.25610	.33340	7.50000	9.64570	-4.98770	.82440	.14350	-.10330
10.519	47.323	.60030	-7.52920	11.25990	.33110	7.50000	9.64270	-4.98730	.82630	.14360	-.10260
	GRADIENT	-.00005	-.12590	.00292	-.00212	.00000	-.00024	-.00054	.00105	-.00004	.00274

RUN NO. 797/ 0 RN/L = 3.29 GRADIENT INTERVAL = .00/ 12.00

ALPHAO	DZ	MACH	DX	DY	BETAO	PHI	ALPHAW	BETA	CL	CD	CLM
14.589	1.523	.59940	-2.24660	11.09770	.90490	7.50000	9.69240	-4.98790	.68960	.12840	-.06030
14.598	4.729	.60080	-2.68170	11.10310	.90410	7.50000	9.69750	-4.98930	.69800	.12930	-.05570
14.608	8.739	.60080	-3.22950	11.10210	.90100	7.50000	9.69610	-4.97690	.70930	.13120	-.06010
14.637	16.314	.59980	-4.26990	11.12770	.89130	7.50000	9.67900	-4.99560	.73040	.13350	-.07030
14.658	31.043	.59930	-6.28400	11.17200	.87570	7.50000	9.66570	-4.99090	.76300	.13700	-.07670
14.687	46.253	.60030	-8.38190	11.20280	.86730	7.50000	9.65840	-4.98970	.78860	.13890	-.08490
14.695	61.364	.60050	-10.46720	11.22980	.85990	7.50000	9.64990	-4.98740	.80590	.14090	-.09370
	GRADIENT	.00019	-.13623	.00057	-.00055	-.00000	-.00085	.00159	.00273	.00039	-.00002

CA20 747/1 01 S1 CARRIER DATA (RGN083) (01 DEC 75)

REFERENCE DATA

SREF =	5500.0000 SQ.FT.	XMRP =	1339.9000 IN.XC
LREF =	327.7800 IN.	YMRP =	.0000 IN.YC
BREF =	2348.0400 IN.	ZMRP =	190.8000 IN.ZC
SCALE =	.0300		

PARAMETRIC DATA

ALPHAC =	8.000	BETAC =	-5.000
ELV-IB =	.000	ELV-OB =	3.000
ELEVON =	5.000	MACH =	.600
BETAO =	.000	PHI =	7.500
DX =	10.000	DY =	10.000

RUN NO. 753/ 0 RN/L = 3.25 GRADIENT INTERVAL = .00/ 12.00

ALPHAO	DZ	MACH	DX	DY	BETAO	PHI	ALPHAH	BETA	CL	CD	CLM
10.157	-4.055	.59920	9.58440	12.02470	.35460	7.50000	9.72220	-4.97930	.79740	.14360	-.15830
10.183	-1.077	.59910	9.17960	12.01420	.36780	7.50000	9.72250	-4.98720	.79680	.14270	-.14670
10.217	3.434	.59910	8.55730	12.01330	.37270	7.50000	9.72190	-4.98040	.79920	.14260	-.13780
10.253	10.894	.59950	7.53340	12.03380	.36920	7.50000	9.72090	-4.99020	.80350	.14330	-.12110
10.325	26.227	.60000	5.40650	12.07790	.35530	7.50000	9.71650	-4.99130	.81790	.14460	-.10810
10.368	40.688	.59980	3.36780	12.10570	.34890	7.50000	9.71180	-4.99700	.83040	.14550	-.10850
10.380	47.654	.59990	2.42180	12.11250	.34450	7.50000	9.71230	-4.98090	.83650	.14590	-.10580
	GRADIENT	.00005	-.13725	.00275	-.00047	.00000	-.00013	-.00131	.00058	.00009	.00224

RUN NO. 754/ 0 RN/L = 3.25 GRADIENT INTERVAL = .00/ 12.00

ALPHAO	DZ	MACH	DX	DY	BETAO	PHI	ALPHAH	BETA	CL	CD	CLM
14.464	-1.083	.59930	8.03390	11.93300	.92370	7.50000	9.74720	-4.98020	.72850	.13090	-.05040
14.477	1.853	.59970	7.63200	11.94050	.92590	7.50000	9.74680	-4.99710	.73030	.13170	-.04600
14.493	6.138	.59980	7.04460	11.94340	.92410	7.50000	9.74430	-4.98480	.73030	.13310	-.04850
14.525	13.721	.60080	6.00510	11.96290	.91650	7.50000	9.73740	-4.98940	.75290	.13570	-.05680
14.575	28.934	.60020	3.90070	12.00290	.89970	7.50000	9.72870	-4.98460	.77830	.13920	-.07040
14.596	44.022	.59940	1.80220	12.03180	.89130	7.50000	9.72270	-4.99150	.80000	.14100	-.08200
14.608	58.528	.60060	-.22260	12.06010	.88300	7.50000	9.71910	-4.99680	.81620	.14270	-.09200
	GRADIENT	.00002	-.13708	.00068	-.00042	.00000	-.00058	.00287	.00187	.00033	-.00058

CA20 747/1 01 S1 CARRIER DATA (RGN0841 (01 DEC 75)

REFERENCE DATA

SREF =	5500.0000 SQ.FT.	XMRP =	1339.9000 IN.XC		
LREF =	327.7800 IN.	YMRP =	.0000 IN.YC		
BREF =	2348.0400 IN.	ZMRP =	190.8000 IN.ZC		
SCALE =	.0300				

PARAMETRIC DATA

ALPHAC =	4.000	BETAC =	.000
ELV-IB =	.000	ELV-OB =	3.000
ELEVON =	5.000	MACH =	.600
BETAO =	.000	PHI =	7.500
DX =	.000	DY =	.000

RUN NO. 705/ 0 RN/L = 3.19 GRADIENT INTERVAL = .00/ 12.00

ALPHAO	DZ	MACH	DX	DY	BETAO	PHI	ALPHAW	BETA	CL	CD	CLM
10.477	-.781	.59990	.78190	.11400	.33540	7.50000	5.94610	-.00740	.38990	.09460	.05150
10.470	1.431	.60020	.62900	.11610	.33470	7.50000	5.94350	-.00560	.39710	.09540	.05910
10.466	6.105	.59930	.30370	.12250	.33340	7.50000	5.93640	-.00330	.40950	.09660	.03970
10.472	13.569	.60000	-.21640	.13300	.33140	7.50000	5.92780	-.00960	.43260	.09840	.01100
10.485	28.308	.59960	-1.25130	.14880	.32590	7.50000	5.91880	-.00190	.46330	.09980	-.02530
10.489	43.532	.59950	-2.31820	.15620	.32600	7.50000	5.90860	-.00070	.48470	.10010	-.04080
10.490	47.201	.59940	-2.58010	.15820	.32490	7.50000	5.90960	-.00060	.48830	.10020	-.04430
	GRADIENT	-.00019	-.06961	.00137	-.00028	-.00000	-.00152	.00049	.00265	.00026	-.00415

RUN NO. 704/ 0 RN/L = 3.19 GRADIENT INTERVAL = .00/ 12.00

ALPHAO	DZ	MACH	DX	DY	BETAO	PHI	ALPHAW	BETA	CL	CD	CLM
15.435	6.448	.59970	-.69570	.16150	.97600	7.50000	5.86270	-.00920	.29530	.08230	.19480
15.428	9.304	.59980	-.89700	.16320	.97380	7.50000	5.85980	-.01440	.30900	.08540	.17040
15.423	12.875	.59960	-1.14210	.16420	.97360	7.50000	5.85340	-.01150	.32580	.08840	.14440
15.412	20.640	.59920	-1.67000	.17050	.96990	7.50000	5.83730	-.00340	.36300	.09340	.08110
15.415	36.109	.60000	-2.72220	.18780	.96590	7.50000	5.81930	-.00920	.41170	.09690	.02200
15.414	50.653	.59970	-3.71920	.19180	.96360	7.50000	5.80820	-.00090	.44170	.09920	-.00980
14.600	60.670	.60080	-4.54030	.20570	.64990	7.50000	5.91280	.00730	.47320	.09950	-.03200
15.413	65.386	.59960	-4.73040	.20630	.95590	7.50000	5.80070	-.00040	.46230	.09870	-.02680
	GRADIENT	.00004	-.07049	.00060	-.00077	.00000	-.00102	-.00182	.00480	.00109	-.00854

ORIGINAL PAGE IS
OF POOR QUALITY

CA20 747/1 01 S1 CARRIER DATA (RGN085) (01 DEC 75)

REFERENCE DATA

SREF =	5500.0000 SQ.FT.	XMRP =	1339.9000 IN.XC		
LREF =	327.7800 IN.	YMRP =	.0000 IN.YC		
BREF =	2348.0400 IN.	ZMRP =	190.8000 IN.ZC		
SCALE =	.0300				

PARAMETRIC DATA

ALPHAC =	4.000	BETAC =	.000
ELV-IB =	.000	ELV-OB =	3.000
ELEVON =	5.000	MACH =	.600
BETAO =	.000	PHI =	7.500
DX =	10.000	DY =	.000

RUN NO. 686/ 0 RN/L = 3.25 GRADIENT INTERVAL = .00/ 12.00

ALPHAO	DZ	MACH	DX	DY	BETAO	PHI	ALPHAN	BETA	CL	CD	CLM
10.398	-1.550	.59930	10.83680	.08910	.32620	7.50000	5.66960	.00820	.40790	.09340	.05060
10.383	1.373	.59930	10.63990	.09070	.32610	7.50000	5.66980	.00850	.41020	.09460	.05620
10.391	5.899	.59950	10.33220	.09770	.32520	7.50000	5.66370	.01110	.41730	.09500	.04650
10.388	13.274	.59930	9.82720	.10370	.32480	7.50000	5.65710	.01310	.43440	.09760	.01660
10.407	28.273	.59950	8.79640	.11890	.31960	7.50000	5.64670	.02070	.46250	.09910	-.02300
10.420	43.578	.60000	7.73890	.13010	.31980	7.50000	5.63970	.01420	.48130	.09960	-.03930
10.422	48.458	.59940	7.40080	.13490	.31810	7.50000	5.63800	.01410	.48610	.09960	-.04400
	GRADIENT	-.00009	-.06799	.00155	-.00020	-.00000	-.00113	.00057	.00157	.00031	-.00234

RUN NO. 685/ 0 RN/L = 3.26 GRADIENT INTERVAL = .00/ 12.00

ALPHAO	DZ	MACH	DX	DY	BETAO	PHI	ALPHAN	BETA	CL	CD	CLM
14.697	1.100	.59940	9.54250	.13260	.87920	7.50000	5.69750	-.00300	.33420	.08020	.21610
14.684	4.360	.60060	9.32210	.13590	.87860	7.50000	5.69530	-.00170	.33990	.08400	.19660
14.678	8.649	.60060	9.02890	.13720	.87880	7.50000	5.68960	.01030	.35420	.08780	.16190
14.673	16.181	.59930	8.51060	.15310	.87710	7.50000	5.67810	.00470	.38410	.09200	.09540
14.676	31.096	.60050	7.46510	.17240	.87330	7.50000	5.66330	.00570	.42350	.09600	.03120
14.684	46.169	.60080	6.44000	.16710	.87350	7.50000	5.65290	.01390	.45170	.09770	-.00470
14.686	61.197	.59990	5.39690	.18170	.86570	7.50000	5.64650	.01430	.46890	.09860	-.02360
	GRADIENT	.00015	-.06805	.00059	-.00005	-.00000	-.00106	.00181	.00268	.00100	-.00723

CA20 747/1 01 S1 CARRIER DATA (RGN0961) (01 DEC 75)

REFERENCE DATA

SREF = 5500.0000 SQ.FT. XMRP = 1339.9000 IN.XC
LREF = 327.7800 IN. YMRP = .0000 IN.YC
BREF = 2348.0400 IN. ZMRP = 190.8000 IN.ZC
SCALE = .0300

PARAMETRIC DATA

ALPHAC = 8.000 BETAC = .000
ELV-IB = .000 ELV-OB = 3.000
ELEVON = 5.000 MACH = .600
BETAO = .000 PHI = 7.500
DX = .000 DY = .000

RUN NO. 702/ 0 RN/L = 3.21 GRADIENT INTERVAL = .00/ 12.00

ALPHAO	DZ	MACH	DX	DY	BETAO	PHI	ALPHAH	BETA	CL	CD	CLM
10.331	-1.338	.59930	-.84120	.08700	.33000	7.50000	9.69480	-.00030	.77300	.14690	-.09290
10.340	1.740	.60000	-1.25560	.07150	.33130	7.50000	9.69390	-.00040	.77610	.14700	-.08650
10.363	6.289	.60070	-1.87590	.08170	.33280	7.50000	9.68910	-.00010	.78340	.14740	-.08520
10.396	13.806	.60030	-2.90490	.09630	.33230	7.50000	9.68730	.00010	.79490	.14780	-.08660
10.462	28.633	.60060	-4.95180	.12810	.32950	7.50000	9.68090	.00860	.81330	.14960	-.08660
10.485	43.486	.60040	-7.00390	.14140	.33000	7.50000	9.67620	.00150	.82730	.15180	-.08590
10.489	47.086	.59950	-7.50170	.14340	.32810	7.50000	9.67300	.00920	.82980	.15190	-.08420
	GRADIENT	.00015	-.13634	.00224	.00033	.00000	-.00106	.00007	.00160	.00009	.00018

RUN NO. 703/ 0 RN/L = 3.20 GRADIENT INTERVAL = .00/ 12.00

ALPHAO	DZ	MACH	DX	DY	BETAO	PHI	ALPHAH	BETA	CL	CD	CLM
14.513	1.005	.60000	-2.17580	.11060	.86690	7.50000	9.72400	-.01250	.68720	.13190	.02460
14.522	4.003	.59980	-2.58520	.11270	.86730	7.50000	9.71980	-.00330	.69840	.13370	.00850
14.535	8.390	.60090	-3.18350	.12190	.86560	7.50000	9.71600	-.00140	.71470	.13600	-.01740
14.550	15.842	.59970	-4.20120	.13390	.86250	7.50000	9.70760	-.00040	.73760	.13850	-.04210
15.384	35.410	.59990	-6.93850	.15790	.96430	7.50000	9.69510	.00020	.77280	.14290	-.06560
15.387	50.740	.60030	-9.05870	.17100	.96420	7.50000	9.68570	.00140	.79670	.14620	-.07400
15.398	65.244	.60010	-11.07430	.19330	.95630	7.50000	9.68350	.00140	.81250	.14850	-.07500
	GRADIENT	.00013	-.13645	.00157	-.00019	-.00000	-.00107	.00142	.00372	.00055	-.00570

ORIGINAL PAGE IS
OF POOR QUALITY

CA20 747/1 01 SI CARRIER DATA (RGN087) (01 DEC 75)

REFERENCE DATA

SREF = 5500.0000 SQ.FT. XMRP = 1339.9000 IN.XC
LREF = 327.7800 IN. YMRP = .0000 IN.YC
BREF = 2348.0400 IN. ZMRP = 190.8000 IN.ZC
SCALE = .0300

PARAMETRIC DATA

ALPHAC =	8.000	BETAC =	.000
ELV-IB =	.000	ELV-OB =	3.000
ELEVON =	5.000	MACH =	.600
BETAO =	.000	PHI =	7.500
DX =	10.000	DY =	.000

RUN NO. 683/ 0 RN/L = 3.27 GRADIENT INTERVAL = .00/ 12.00

ALPHAO	DZ	MACH	DX	DY	BETAO	PHI	ALPHAW	BETA	CL	CD	CLM
10.202	-2.846	.60070	9.42630	.05380	.30970	7.50000	9.72550	.00720	.78970	.14850	-.10100
10.212	.552	.60020	8.96280	.05120	.31500	7.50000	9.72650	.01490	.78740	.14790	-.08940
10.232	4.877	.60020	8.36890	.05670	.31740	7.50000	9.72560	.01510	.79020	.14780	-.08160
10.267	12.472	.59990	7.32440	.07370	.31830	7.50000	9.72090	.00760	.79710	.14810	-.08240
10.343	27.592	.59930	5.22440	.09540	.31840	7.50000	9.71640	.02330	.81010	.14930	-.08110
10.377	42.540	.60030	3.14650	.11600	.31820	7.50000	9.71420	.01650	.82330	.15160	-.07650
10.387	48.934	.60050	2.25810	.12250	.31670	7.50000	9.71250	.01650	.82830	.15240	-.07900
	GRADIENT	.00000	-.13731	.00127	.00055	.00000	-.00021	.00005	.00065	-.00002	.00180

RUN NO. 684/ 0 RN/L = 3.26 GRADIENT INTERVAL = .00/ 12.00

ALPHAO	DZ	MACH	DX	DY	BETAO	PHI	ALPHAW	BETA	CL	CD	CLM
14.557	-1.221	.59970	8.03810	.07550	.87510	7.50000	9.75080	.00290	.71600	.13400	.03830
14.553	1.801	.59960	7.63010	.08350	.87580	7.50000	9.75280	.00360	.71700	.13510	.04080
14.564	6.393	.59920	7.00370	.08780	.87610	7.50000	9.74630	.01280	.72780	.13660	.01920
14.590	13.985	.59980	5.98410	.10350	.87480	7.50000	9.74190	.01410	.74550	.13890	-.01180
14.632	28.717	.60040	3.93720	.13370	.87070	7.50000	9.73190	.01500	.77320	.14250	-.04310
14.655	43.772	.59920	1.84850	.14770	.87100	7.50000	9.72470	.01620	.79310	.14540	-.05600
14.654	48.457	.59900	1.19960	.14870	.86940	7.50000	9.72120	.02410	.79570	.14620	-.05910
14.666	53.011	.59990	.56350	.15680	.86900	7.50000	9.72150	.01640	.80250	.14700	-.06030
	GRADIENT	-.00009	-.13640	.00085	.00007	.00000	-.00142	.00200	.00235	.00033	-.00470

CA20 747/1 01 S1 CARRIER DATA (RGN088) (01 DEC 75)

REFERENCE DATA

SREF = 5500.0000 SQ.FT. XMRP = 1339.9000 IN.XC
LREF = 327.7800 IN. YMRP = .0000 IN.YC
BREF = 2348.0400 IN. ZMRP = 190.8000 IN.ZC
SCALE = .0300

PARAMETRIC DATA

ALPHAC = 4.000 BETAC = .000
ELV-IB = .000 ELV-OB = 3.000
ELEVON = 5.000 MACH = .600
BETAO = .000 PHI = 7.500
DX = .000 DY = 10.000

RUN NO. 790/ 0 RN/L = 3.35 GRADIENT INTERVAL = .00/ 12.00

ALPHAO	DZ	MACH	DX	DY	BETAO	PHI	ALPHAW	BETA	CL	CD	CLM
10.555	.254	.60080	.71130	10.12070	.35260	7.50000	5.84990	.00050	.39030	.09650	.04120
10.549	3.398	.59950	.49520	10.11910	.35390	7.50000	5.84950	-.00680	.39750	.09670	.03870
10.551	7.733	.60010	.20180	10.11940	.35340	7.50000	5.84070	.00080	.40910	.09740	.02700
10.556	15.401	.60060	-.31960	10.12750	.35020	7.50000	5.83350	-.00960	.42940	.09870	.00100
10.567	30.165	.60090	-1.32890	10.14530	.33960	7.50000	5.82300	.00410	.45840	.09970	-.02880
10.572	45.458	.59920	-2.38060	10.15660	.33400	7.50000	5.81600	.00450	.47750	.09980	-.04280
10.573	47.767	.59990	-2.54180	10.16140	.33220	7.50000	5.81730	-.00320	.48030	.09990	-.04730
	GRADIENT	-.00008	-.06810	-.00016	.00009	-.00000	-.00128	.00014	.00252	.00012	-.00195

RUN NO. 793/ 0 RN/L = 3.32 GRADIENT INTERVAL = .00/ 12.00

ALPHAO	DZ	MACH	DX	DY	BETAO	PHI	ALPHAW	BETA	CL	CD	CLM
14.705	1.985	.60000	-.34990	10.14030	.88850	7.50000	5.86510	-.00700	.31540	.08700	.17020
14.705	4.790	.59970	-.54980	10.14100	.88850	7.50000	5.86030	-.00760	.31820	.08740	.14610
14.694	8.916	.59960	-.83550	10.14240	.88720	7.50000	5.85670	-.00950	.33460	.08880	.12340
14.687	16.371	.59920	-1.34730	10.15560	.88140	7.50000	5.84520	-.00660	.36700	.09320	.07480
14.692	31.267	.60010	-2.36750	10.18500	.87110	7.50000	5.82820	-.01420	.41320	.09670	.01540
14.697	46.547	.59960	-3.41780	10.19680	.86680	7.50000	5.81760	-.01260	.44200	.09840	-.01320
14.696	61.277	.59940	-4.42800	10.21090	.85990	7.50000	5.80770	-.00330	.46250	.09890	-.03160
	GRADIENT	-.00006	-.07000	.00031	-.00020	-.00000	-.00119	-.00037	.00420	.00027	-.00666

DATE 01 DEC 75 TABULATED SOURCE DATA - CA20

CA20 747/1 01 S1 CARRIER DATA (RGN0891 (01 DEC 75)

REFERENCE DATA

SREF = 5500.0000 SQ.FT. XMRP = 1339.9000 IN.XC
LREF = 327.7800 IN. YMRP = .0000 IN.YC
BREF = 2348.0400 IN. ZMRP = 190.8000 IN.ZC
SCALE = .0300

PARAMETRIC DATA

ALPHAC = 4.000 BETAC = .000
ELV-IB = .000 ELV-OB = 3.000
ELEVON = 5.000 MACH = .600
BETAO = .000 PHI = 7.500
DX = 10.000 DY = 10.000

RUN NO. 748/ 0 RN/L = 3.31 GRADIENT INTERVAL = .00/ 12.00

ALPHAO	DZ	MACH	DX	DY	BETAO	PHI	ALPHAH	BETA	CL	CD	CLM
10.378	-1.632	.60020	10.85360	10.09140	.36670	7.50000	5.85980	.00020	.41630	.09520	.02970
10.387	1.664	.60010	10.62560	10.08940	.36940	7.50000	5.85350	.00820	.41840	.09600	.03110
10.394	6.264	.60010	10.30850	10.09400	.37000	7.50000	5.85260	.00070	.42730	.09670	.02250
10.402	13.375	.60060	9.82330	10.10030	.36640	7.50000	5.84730	-.00140	.44200	.09800	-.00270
10.423	28.632	.60090	8.77710	10.11670	.35560	7.50000	5.83630	.00390	.46510	.09890	-.03170
10.434	43.693	.60070	7.73850	10.12950	.34900	7.50000	5.82970	.01160	.46420	.09930	-.04950
10.431	47.364	.60030	7.48270	10.13340	.34760	7.50000	5.83090	.01190	.46690	.09940	-.05180
	GRADIENT	.00000	-.06894	.00100	.00013	.00000	-.00020	-.00163	.00193	.00015	-.00187

RUN NO. 751/ 0 RN/L = 3.25 GRADIENT INTERVAL = .00/ 12.00

ALPHAO	DZ	MACH	DX	DY	BETAO	PHI	ALPHAH	BETA	CL	CD	CLM
14.603	-.240	.59960	9.65580	10.10520	.91100	7.50000	5.88620	.00130	.34900	.08490	.16870
14.595	2.648	.59970	9.45510	10.10780	.91230	7.50000	5.88570	.00110	.35390	.08610	.15550
14.596	7.191	.59940	9.14070	10.11050	.91150	7.50000	5.88310	-.00120	.36410	.08820	.13390
14.595	14.612	.59970	8.63500	10.12720	.90760	7.50000	5.87400	-.01480	.38950	.09180	.08370
14.603	29.756	.59940	7.58700	10.15000	.89650	7.50000	5.85730	.00120	.42810	.09560	.01590
14.611	44.626	.59900	6.55800	10.17050	.89130	7.50000	5.84810	-.00560	.45300	.09720	-.01370
14.611	59.694	.59980	5.51570	10.18640	.88330	7.50000	5.83980	-.00370	.47190	.09810	-.03220
	GRADIENT	-.00007	-.06921	.00059	-.00018	.00000	-.00079	-.00051	.00225	.00046	-.00475

CA20 747/1 01 S1 CARRIER DATA (RGN090) (01 DEC 75)

REFERENCE DATA

SREF = 5500.0000 SQ.FT. XMRP = 1339.9000 IN.XC
LREF = 327.7800 IN. YMRP = .0000 IN.YC
BREF = 2348.0400 IN. ZMRP = 190.8000 IN.ZC
SCALE = .0300

PARAMETRIC DATA

ALPHAC = 8.000 BETAC = .000
ELV-IB = .000 ELV-OB = 3.000
ELEVON = 5.000 MACH = .600
BETAO = .000 PHI = 7.500
DX = .000 DY = 10.000

RUN NO. 799/ 0 RN/L = 3.28 GRADIENT INTERVAL = .00/ 12.00

ALPHAO	DZ	MACH	DX	DY	BETAO	PHI	ALPHAW	BETA	CL	CD	CLM
10.357	-.035	.60030	-1.02460	10.11350	.32780	7.50000	9.66040	.01350	.77260	.14640	-.07910
10.375	3.161	.59960	-1.45630	10.10060	.33860	7.50000	9.65910	.00480	.77640	.14600	-.08120
10.396	7.497	.60020	-2.04560	10.09530	.34380	7.50000	9.65930	.00230	.78260	.14590	-.08370
10.435	14.798	.60070	-3.04220	10.09790	.34630	7.50000	9.65560	.00100	.79350	.14660	-.09060
10.494	29.812	.59910	-5.10530	10.11650	.34030	7.50000	9.64940	.01370	.81180	.14770	-.09190
10.518	45.359	.59950	-7.24650	10.13900	.33420	7.50000	9.64690	.00730	.82550	.14960	-.09050
10.522	47.338	.60020	-7.51750	10.14290	.33230	7.50000	9.64400	.00760	.82750	.15020	-.08940
	GRADIENT	.00014	-.13591	-.00122	.00120	.00000	.00005	-.00058	.00143	-.00002	-.00058

RUN NO. 796/ 0 RN/L = 3.29 GRADIENT INTERVAL = .00/ 12.00

ALPHAO	DZ	MACH	DX	DY	BETAO	PHI	ALPHAW	BETA	CL	CD	CLM
14.594	1.481	.59950	-2.22770	10.14370	.87480	7.50000	9.69560	-.00300	.68690	.13100	.02230
14.602	4.549	.59900	-2.64420	10.13000	.88110	7.50000	9.69070	-.00590	.69470	.13190	.00820
14.617	8.657	.59930	-3.20750	10.11860	.88520	7.50000	9.68790	-.00250	.70960	.13370	-.01700
14.642	16.518	.59980	-4.27940	10.12340	.88400	7.50000	9.67930	.00160	.73400	.13650	-.04660
14.671	31.266	.59980	-6.30190	10.14970	.87470	7.50000	9.66690	-.00270	.76850	.14100	-.05740
14.687	46.167	.60010	-8.35180	10.17100	.86860	7.50000	9.65650	-.00210	.79170	.14390	-.07530
14.696	61.030	.60020	-10.40650	10.19280	.86220	7.50000	9.65050	.00750	.80880	.14660	-.08030
	GRADIENT	-.00002	-.13657	-.00346	.00142	.00000	-.00105	.00011	.00319	.00038	-.00551

ORIGINAL PAGE IS
OF POOR QUALITY

CA20 747/1 01 S1 CARRIER DATA (RGN031) (01 DEC 75)

REFERENCE DATA

SREF =	5500.0000 SQ.FT.	XMRP =	1339.9000 IN.XC
LREF =	327.7800 IN.	YMRP =	.0000 IN.YC
BREF =	2348.0400 IN.	ZMRP =	190.8000 IN.ZC
SCALE =	.0300		

PARAMETRIC DATA

ALPHAC =	8.000	BETAC =	.000
ELV-IB =	.000	ELV-OB =	3.000
ELEVON =	5.000	MACH =	.600
BETAO =	.000	PHI =	7.500
DX =	10.000	DY =	10.000

RUN NO. 749/ 0 RN/L = 3.28 GRADIENT INTERVAL = .00/ 12.00

ALPHAO	DZ	MACH	DX	DY	BETAO	PHI	ALPHAW	BETA	CL	CD	CLM
10.211	-2.473	.60010	9.37070	10.09490	.34320	7.50000	9.73370	.00410	.79710	.14880	-.08920
10.231	.694	.59940	8.93780	10.08320	.35240	7.50000	9.73220	.00470	.79450	.14810	-.08520
10.254	5.170	.59950	8.32140	10.07530	.36020	7.50000	9.73090	.00260	.79890	.14800	-.08560
10.284	12.734	.59930	7.28040	10.07600	.36200	7.50000	9.72830	.00110	.80630	.14830	-.09030
10.350	27.679	.59950	5.20360	10.09700	.35550	7.50000	9.72610	.00560	.82030	.14960	-.09090
10.390	42.827	.59970	3.09470	10.11470	.35150	7.50000	9.71980	.00660	.83210	.15150	-.08730
10.396	47.827	.60050	2.39640	10.12240	.34830	7.50000	9.72100	.00690	.83540	.15230	-.08750
	GRADIENT	.00002	-.13739	-.00176	.00174	-.00000	-.00029	-.00047	.00098	-.00002	-.00009

RUN NO. 750/ 0 RN/L = 3.26 GRADIENT INTERVAL = .00/ 12.00

ALPHAO	DZ	MACH	DX	DY	BETAO	PHI	ALPHAW	BETA	CL	CD	CLM
14.458	-1.845	.59970	8.15120	10.11780	.89550	7.50000	9.75910	.00240	.72820	.13550	.03620
14.468	1.617	.59960	7.67690	10.10740	.90290	7.50000	9.75970	.00250	.72930	.13570	.03300
14.487	6.361	.60050	7.02750	10.09550	.90700	7.50000	9.75520	.01360	.73950	.13690	.00900
14.517	13.973	.60060	5.97980	10.09910	.90650	7.50000	9.74700	.00160	.75630	.13870	-.02430
14.559	28.740	.60010	3.93560	10.12300	.89680	7.50000	9.73940	.00370	.78280	.14260	-.05820
14.582	41.006	.59970	2.22730	10.13620	.89270	7.50000	9.73390	-.00330	.79860	.14530	-.06650
14.586	42.477	.60050	2.02840	10.13900	.89110	7.50000	9.72820	-.00310	.80220	.14600	-.06720
14.596	58.866	.59920	-.26060	10.16340	.88240	7.50000	9.72500	-.00120	.81720	.14840	-.07580
	GRADIENT	.00019	-.13689	-.00251	.00086	.00000	-.00074	.00234	.00215	.00025	-.00506

DATE 01 DEC 75 TABULATED SOURCE DATA - CA20

CA20 747/1 01 S1 CARRIER DATA (RGH092) (01 DEC 75)

REFERENCE DATA

SREF =	5500.0000 SQ.FT.	XMRP =	1339.9000 IN.XC
LREF =	327.7800 IN.	YMRP =	.0000 IN.YC
BREF =	2348.0400 IN.	ZMRP =	190.8000 IN.ZC
SCALE =	.0300		

PARAMETRIC DATA

ALPHAC =	4.000	BETAC =	5.000
ELV-IB =	.000	ELV-OB =	3.000
ELEVON =	5.000	MACH =	.600
BETAO =	.000	PHI =	7.500
DX =	.000	DY =	10.000

RUN NO. 789/ 0 RN/L = 3.37 GRADIENT INTERVAL = .00/ 12.00

ALPHAO	DZ	MACH	DX	DY	BETAO	PHI	ALPHAW	BETA	CL	CD	CLH
10.577	-.150	.59980	.72100	8.98510	.36680	7.50000	5.84990	4.98850	.39630	.09040	.06550
10.565	3.399	.60030	.48180	8.96960	.36070	7.50000	5.84670	4.98640	.40550	.09130	.05150
10.564	7.766	.60060	.18390	8.97340	.35770	7.50000	5.83930	4.98560	.41930	.09250	.02440
10.561	15.573	.59950	-.34810	8.97980	.35300	7.50000	5.83440	4.96720	.43990	.09340	-.00830
10.569	30.037	.59900	-1.33700	8.99030	.34320	7.50000	5.82300	4.97980	.46410	.09360	-.04150
10.574	45.241	.60010	-2.37860	9.00170	.33720	7.50000	5.81630	4.98170	.48220	.09440	-.05160
10.574	47.768	.59970	-2.55580	9.00290	.33550	7.50000	5.81750	4.98180	.48420	.09420	-.05430
	GRADIENT	.00007	-.06801	.00087	-.00069	-.00000	-.00169	-.00018	.00315	.00027	-.00619

RUN NO. 794/ 0 RN/L = 3.31 GRADIENT INTERVAL = .00/ 12.00

ALPHAO	DZ	MACH	DX	DY	BETAO	PHI	ALPHAW	BETA	CL	CD	CLH
14.741	1.968	.59930	-.37430	9.07530	.89280	7.50000	5.86070	5.00420	.31690	.07950	.18590
14.723	4.532	.59380	-.65020	9.07210	.89060	7.50000	5.85950	5.00880	.32650	.08000	.16050
14.712	8.966	.60060	-.85330	9.07150	.88960	7.50000	5.85570	5.01510	.34370	.08370	.13110
14.701	16.604	.59970	-1.37350	9.08220	.88480	7.50000	5.84130	5.00370	.37710	.08800	.07060
14.695	31.346	.60060	-2.38170	9.10610	.87490	7.50000	5.82510	5.00290	.42099	.09130	.00560
14.699	46.655	.59970	-3.43760	9.11960	.86940	7.50000	5.81480	4.99540	.44870	.09270	-.02450
14.659	61.405	.60010	-4.45100	9.13090	.86330	7.50000	5.80750	5.00490	.46840	.09340	-.04020
	GRADIENT	.00019	-.06844	-.00050	-.00043	-.00000	-.00073	.00154	.00384	.00063	-.00770

DATE 01 DEC 75 TABULATED SOURCE DATA - CA20

CA20 747/1 01 SI

CARRIER DATA (RGN0931 (01 DEC 75)

REFERENCE DATA

SREF = 5500.0000 SQ.FT. XMRP = 1339.9000 IN.XC
LREF = 327.7800 IN. YMRP = .0000 IN.YC
BREF = 2348.0400 IN. ZMRP = 190.8000 IN.ZC
SCALE = .0300

PARAMETRIC DATA

ALPHAC =	4.000	BETAC =	5.000
ELV-IB =	.000	ELV-OB =	3.000
ELEVON =	5.000	MACH =	.600
BETAO =	.000	PHI =	7.500
DX =	10.000	DY =	10.000

RUN NO. 756/ 0 RN/L = 3.27 GRADIENT INTERVAL = .00/ 12.00

ALPHAO	DZ	MACH	DX	DY	BETAO	PHI	ALPHAW	BETA	CL	CD	CLM
10.407	-1.572	.60030	10.63100	8.07640	.37780	7.50000	5.85940	4.98230	.42330	.09020	.05110
10.397	1.286	.60000	10.63680	8.07760	.37490	7.50000	5.85760	4.98060	.42590	.09040	.04670
10.396	5.872	.60080	10.32570	8.08270	.37180	7.50000	5.85460	4.97180	.43380	.09160	.02420
10.403	13.650	.60030	9.79170	8.08480	.36780	7.50000	5.85130	4.96920	.44910	.09240	-.00970
10.415	28.531	.59970	8.76850	8.09390	.35840	7.50000	5.84310	4.97310	.47170	.09300	-.04660
10.423	43.642	.60020	7.72630	8.10690	.35200	7.50000	5.83760	4.97480	.48660	.09340	-.05630
10.426	47.246	.60080	7.47400	8.11120	.34990	7.50000	5.83890	4.97490	.48940	.09380	-.05640
	GRADIENT	.00017	-.06799	.00111	-.00068	.00000	-.00066	-.00192	.00173	.00026	-.00492

RUN NO. 759/ 0 RN/L = 3.24 GRADIENT INTERVAL = .00/ 12.00

ALPHAO	DZ	MACH	DX	DY	BETAO	PHI	ALPHAW	BETA	CL	CD	CLM
14.648	-.347	.60040	9.63370	8.18350	.91470	7.50000	5.88520	4.98300	.35160	.07780	.19830
14.628	2.762	.60080	9.42610	8.18750	.91280	7.50000	5.87930	4.97890	.35590	.07920	.17840
14.615	7.144	.59940	9.12810	8.18710	.91230	7.50000	5.87670	4.97800	.36900	.08310	.14530
14.606	14.929	.59920	8.60060	8.19200	.90870	7.50000	5.86460	4.97460	.39540	.08680	.07890
14.610	29.445	.59310	7.60310	8.22120	.90000	7.50000	5.85130	4.96530	.43110	.09030	.01130
14.615	44.674	.59940	6.55210	8.23570	.89450	7.50000	5.83930	4.96520	.45720	.09200	-.02430
14.618	59.607	.59920	5.51130	8.25220	.88490	7.50000	5.83790	4.97470	.47320	.09290	-.04140
	GRADIENT	-.00032	-.06800	-.00009	-.00011	-.00000	-.00059	-.00021	.00299	.00089	-.00755

CA20 747/1 01 S1 CARRIER DATA (RGN094) (01 DEC 75)

REFERENCE DATA

SREF =	5500.0000 SQ.FT.	XMRP =	1339.9000 IN.XC		
LREF =	327.7800 IN.	YMRP =	.0000 IN.YC		
BREF =	2348.0400 IN.	ZMRP =	190.8000 IN.ZC		
SCALE =	.0300				

PARAMETRIC DATA

ALPHAC =	8.000	BETAC =	5.000
ELV-IB =	.000	ELV-OB =	3.000
ELEVON =	5.000	MACH =	.600
BETAO =	.000	PHI =	7.500
DX =	.000	DY =	10.000

RUN NO. 800/ 0 RN/L = 3.28 GRADIENT INTERVAL = .00/ 12.00

ALPHAO	DZ	MACH	DX	DY	BETAO	PHI	ALPHAW	BETA	CL	CD	CLM
10.383	-.121	.59930	-1.02330	8.91870	.34720	7.50000	9.65660	4.99450	.78730	.14100	-.09520
10.394	3.280	.59930	-1.48700	8.91930	.34590	7.50000	9.65730	4.99140	.79210	.14030	-.10420
10.408	7.350	.60060	-2.03700	8.91600	.34470	7.50000	9.65340	5.00470	.79690	.14010	-.11190
10.448	15.415	.59950	-3.14280	8.91490	.34670	7.50000	9.65240	4.99410	.80650	.14020	-.12310
10.505	39.092	.60000	-5.16910	8.92880	.34150	7.50000	9.64660	5.00160	.82320	.14200	-.12660
10.523	45.305	.59990	-7.25270	8.94660	.33640	7.50000	9.64150	4.98740	.83760	.14370	-.12620
10.526	47.357	.60070	-7.53260	8.94780	.33480	7.50000	9.63840	4.99510	.84010	.14410	-.12660
	GRADIENT	.00032	-.13514	-.00081	-.00029	.00000	-.00096	.00327	.00118	-.00005	-.00189

RUN NO. 795/ 0 RN/L = 3.30 GRADIENT INTERVAL = .00/ 12.00

ALPHAO	DZ	MACH	DX	DY	BETAO	PHI	ALPHAW	BETA	CL	CD	CLM
14.609	1.223	.59980	-2.21010	9.06050	.87620	7.50000	9.69330	4.97390	.69960	.12510	.02110
14.604	4.295	.60010	-2.62530	9.04320	.87780	7.50000	9.68930	4.98640	.71080	.12690	-.00500
14.610	9.093	.60030	-3.27870	9.02810	.88110	7.50000	9.68390	4.99180	.72580	.12930	-.04020
14.633	16.424	.59900	-4.27940	9.03250	.88090	7.50000	9.67580	4.98360	.74770	.13080	-.07090
14.673	31.163	.60010	-6.30030	9.04260	.87590	7.50000	9.66440	4.99120	.77940	.13500	-.10200
14.686	46.448	.59990	-8.40360	9.06230	.87040	7.50000	9.65340	4.97790	.80390	.13860	-.11310
14.699	61.101	.60050	-10.43360	9.08130	.86590	7.50000	9.64950	4.98680	.82140	.14130	-.11810
	GRADIENT	.00006	-.13571	-.00403	.00063	-.00000	-.00119	.00217	.00331	.00053	-.00774

CA20 747/1 01 S1 CARRIER DATA (RGN095) (01 DEC 75)

REFERENCE DATA

SREF = 5500.0000 SQ.FT. XMRP = 1339.9000 IN.XC
LREF = 327.7800 IN. YMRP = .0000 IN.YC
BREF = 2348.0400 IN. ZMRP = 190.8000 IN.ZC
SCALE = .0300

PARAMETRIC DATA

ALPHAC =	8.000	BETAC =	5.000
ELV-IB =	.000	ELV-OB =	3.000
ELEVON =	5.000	MACH =	.600
BETAO =	.000	PHI =	7.500
DX =	10.000	DY =	10.000

RUN NO. 757/ 0 RN/L = 3.26 GRADIENT INTERVAL = .00/ 12.00

ALPHAO	DZ	MACH	DX	DY	BETAO	PHI	ALPHAH	BETA	CL	CD	CLM
10.229	-2.945	.60060	9.43320	8.02160	.36630	7.50000	9.72940	4.98930	.80030	.14550	-.09870
10.238	.916	.59990	8.90030	8.02590	.36290	7.50000	9.72990	4.97780	.79960	.14520	-.10190
10.254	5.217	.59920	8.30880	8.02100	.36370	7.50000	9.72940	4.98330	.80100	.14450	-.10720
10.286	12.241	.60010	7.33910	8.02610	.36490	7.50000	9.72730	4.96470	.80780	.14490	-.11560
10.352	27.562	.60020	5.20990	8.03700	.35920	7.50000	9.72460	4.97830	.82240	.14650	-.12120
10.383	42.621	.59970	3.12000	8.05510	.35360	7.50000	9.71610	4.97170	.83350	.14750	-.12040
10.385	47.697	.59990	2.41280	8.05700	.35090	7.50000	9.71670	4.97960	.83820	.14810	-.12230
	GRADIENT	-.00016	-.13752	-.00114	.00019	.00000	-.00012	.00128	.00033	-.00016	-.00123

RUN NO. 758/ 0 RN/L = 3.26 GRADIENT INTERVAL = .00/ 12.00

ALPHAO	DZ	MACH	DX	DY	BETAO	PHI	ALPHAH	BETA	CL	CD	CLM
14.510	-1.170	.60020	8.03630	8.17130	.90250	7.50000	9.75370	4.98380	.73530	.13040	.02170
14.504	1.917	.60050	7.62130	8.16420	.90580	7.50000	9.75550	4.97220	.73770	.13070	.01810
14.507	6.286	.59960	7.02320	8.15640	.90740	7.50000	9.75180	4.96980	.74740	.13210	-.01490
14.530	13.848	.60020	5.98650	8.14470	.90720	7.50000	9.74450	4.98380	.76120	.13430	-.04330
14.567	29.243	.60030	3.86020	8.15720	.90150	7.50000	9.73420	4.97640	.78310	.13920	-.08050
14.594	43.847	.60080	1.82560	8.17000	.89540	7.50000	9.73000	4.97790	.80120	.14290	-.09490
14.605	58.656	.60070	-.24170	8.19240	.88780	7.50000	9.72470	4.97150	.81600	.14520	-.10400
	GRADIENT	-.00021	-.13690	-.00179	.00037	.00000	-.00085	-.00055	.00222	.00032	-.00755

CA20 747/1 01 S1 CARRIER DATA (RGN096) (01 DEC 75)

REFERENCE DATA

SREF =	5500.0000 SQ.FT.	XMRP =	1339.9000 IN.XC		
LREF =	327.7800 IN.	YMRP =	.0000 IN.YC		
BREF =	2348.0400 IN.	ZMRP =	190.6000 IN.ZC		
SCALE =	.0300				

PARAMETRIC DATA

ALPHAC =	4.000	BETAC =	-5.000
ELV-IB =	.000	ELV-OB =	3.000
ELEVON =	5.000	MACH =	.600
BETAO =	-5.000	PHI =	7.500
DX =	.000	DY =	10.000

RUN NO. 804/ 0 RN/L = 3.23 GRADIENT INTERVAL = .00/ 12.00

ALPHAO	DZ	MACH	DX	DY	BETAO	PHI	ALPHAW	BETA	CL	CD	CLM
10.581	.639	.59990	.65310	11.60330	-4.90570	7.50000	5.85380	-4.99080	.38170	.09030	.03180
10.577	3.578	.59970	.45410	11.60440	-4.90260	7.50000	5.84720	-4.98290	.38760	.09080	.03530
10.576	7.654	.60050	.16150	11.61590	-4.90650	7.50000	5.84590	-4.97530	.39780	.09180	.02850
10.593	15.309	.60030	-.34730	11.63520	-4.91210	7.50000	5.83940	-4.98310	.41770	.09300	.00940
10.601	30.620	.60020	-1.40130	11.66810	-4.92520	7.50000	5.82710	-4.97290	.44920	.09430	-.01750
10.617	45.347	.60010	-2.42020	11.68410	-4.92890	7.50000	5.81980	-4.97990	.46910	.09440	-.03330
10.614	47.836	.59960	-2.59130	11.68650	-4.93060	7.50000	5.81890	-4.97190	.47140	.09430	-.03600
	GRADIENT	.00009	-.06819	.00181	-.00017	.00000	-.00104	.00212	.00224	.00021	-.00054

RUN NO. 805/ 0 RN/L = 3.29 GRADIENT INTERVAL = .00/ 12.00

ALPHAO	DZ	MACH	DX	DY	BETAO	PHI	ALPHAW	BETA	CL	CD	CLM
14.802	1.971	.60070	-.39910	11.58740	-4.33990	7.50000	5.87680	-4.99520	.30720	.08310	.11190
14.786	4.974	.60090	-.60690	11.58650	-4.33680	7.50000	5.87760	-4.98020	.31140	.08420	.12540
14.775	9.438	.59980	-.91750	11.59210	-4.33820	7.50000	5.87070	-4.97870	.33020	.08570	.10400
14.774	16.557	.60050	-1.40750	11.61020	-4.34400	7.50000	5.86150	-4.98720	.35620	.08900	.07910
14.779	31.753	.60030	-2.45270	11.64460	-4.35690	7.50000	5.84370	-4.98040	.40490	.09220	.02030
14.774	47.052	.60020	-3.50320	11.66200	-4.36560	7.50000	5.82950	-4.98910	.43630	.09370	-.00850
14.772	61.438	.59970	-4.49830	11.67880	-4.37510	7.50000	5.82190	-4.97970	.45680	.09370	-.02650
	GRADIENT	-.00013	-.06943	.00068	.00019	.00000	-.00112	.00207	.00317	.00035	-.00135

ORIGINAL PAGE IS
OF POOR QUALITY

CA20 747/1 01 S1 CARRIER DATA IRGN0971 (01 DEC 75)

REFERENCE DATA

SREF = 5500.0000 SQ.FT. XMRP = 1339.8000 IN.XC
LREF = 327.7800 IN. YMRP = .0000 IN.YC
BREF = 2348.0400 IN. ZMRP = 180.8000 IN.ZC
SCALE = .0300

PARAMETRIC DATA

ALPHAC = 8.000 BETAC = -5.000
ELV-IB = .000 ELV-OB = 3.000
ELEVON = 5.000 MACH = .600
BETAO = -5.000 PHI = 7.500
DX = .000 DY = 10.000

RUN NO. 811/ 0 RN/L = 3.28 GRADIENT INTERVAL = .00/ 12.00

ALPHAO	DZ	MACH	DX	DY	BETAO	PHI	ALPHAW	BETA	CL	CD	CLM
10.393	-.093	.59910	-1.05190	11.61180	-4.92370	7.50000	9.67230	-4.98240	.75530	.13960	-.08410
10.413	2.882	.60020	-1.45190	11.60080	-4.91330	7.50000	9.67070	-4.97430	.75980	.13960	-.08450
10.438	7.530	.59990	-2.08240	11.60720	-4.90870	7.50000	9.66820	-4.97440	.76630	.13950	-.08260
10.483	15.189	.60080	-3.13490	11.63100	-4.91160	7.50000	9.66350	-4.97360	.78030	.14040	-.08640
10.527	28.943	.59960	-5.16010	11.67380	-4.92360	7.50000	9.65390	-4.97220	.80090	.14170	-.08290
10.564	45.352	.60010	-7.29310	11.70260	-4.92950	7.50000	9.65000	-4.97110	.81830	.14280	-.09830
10.566	47.555	.59990	-7.60080	11.70560	-4.93000	7.50000	9.65160	-4.98630	.82020	.14280	-.09820
	GRADIENT	-.00006	-.13565	.00138	.00099	.00000	-.00097	-.00002	.00140	-.00002	.00041

RUN NO. 810/ 0 RN/L = 3.26 GRADIENT INTERVAL = .00/ 12.00

ALPHAO	DZ	MACH	DX	DY	BETAO	PHI	ALPHAW	BETA	CL	CD	CLM
14.680	.829	.60040	-2.17220	11.58110	-4.34470	7.50000	9.70740	-4.97590	.66300	.12420	.00850
14.684	3.926	.59960	-2.59130	11.58530	-4.33890	7.50000	9.69930	-4.98360	.67330	.12610	-.00120
14.700	7.951	.60050	-3.13840	11.58450	-4.33550	7.50000	9.69450	-4.98380	.68710	.12790	-.01110
14.711	15.864	.59950	-4.22030	11.60190	-4.33950	7.50000	9.68490	-4.97770	.71410	.13130	-.03650
14.732	30.777	.59960	-6.27550	11.65440	-4.35420	7.50000	9.67290	-4.97590	.75400	.13560	-.06650
14.745	45.232	.60020	-8.28290	11.67750	-4.36110	7.50000	9.66090	-4.98040	.78090	.13810	-.07980
14.748	60.426	.59990	-10.26960	11.69300	-4.37020	7.50000	9.59040	-4.96340	.80120	.14000	-.08960
	GRADIENT	.00002	-.13567	.00044	.00127	.00000	-.00178	-.00107	.00339	.00052	-.00274

DATE 01 DEC 75 TABULATED SOURCE DATA - CA20

CA20 747/1 01 S1 CARRIER DATA (RGN098) (01 DEC 75)

REFERENCE DATA

SREF = 5500.0000 SQ.FT. XMRP = 1339.9000 IN.XC
LREF = 327.7800 IN. YMRP = .0000 IN.YC
BREF = 2348.0400 IN. ZMRP = 190.8000 IN.ZC
SCALE = .0300

PARAMETRIC DATA

ALPHAC =	4.000	BETAC =	.000
ELV-IB =	.000	ELV-OB =	3.000
ELEVON =	5.000	MACH =	.600
BETAO =	-5.000	PHI =	7.500
DX =	.000	DY =	10.000

RUN NO. 803/ 0 RN/L = 3.29 GRADIENT INTERVAL = .00/ 12.00

ALPHAO	DZ	MACH	DX	DY	BETAO	PHI	ALPHAW	BETA	CL	CD	CLM
10.589	.754	.59940	.66640	10.56860	-4.90970	7.50000	5.84440	-.00200	.36320	.09200	.11570
10.591	3.692	.59900	.46860	10.56500	-4.90860	7.50000	5.84070	.00000	.37300	.09280	.10290
10.595	7.812	.60050	.16690	10.57170	-4.91050	7.50000	5.83450	.00630	.38980	.09470	.07810
10.597	15.159	.60020	-.31050	10.56790	-4.91080	7.50000	5.82350	.00350	.41370	.09670	.03060
10.599	28.483	.60030	-1.22300	10.59810	-4.92080	7.50000	5.81450	-.00380	.44440	.09870	-.00790
10.609	45.607	.60050	-2.39880	10.61570	-4.92840	7.50000	5.80530	.00650	.46910	.09970	-.03070
10.609	47.846	.60020	-2.55520	10.61480	-4.92850	7.50000	5.80650	.00660	.47200	.09970	-.03360
	GRADIENT	.00017	-.06796	.00052	-.00014	.00000	-.00141	.00120	.00379	.00039	-.00656

RUN NO. 806/ 0 RN/L = 3.28 GRADIENT INTERVAL = .00/ 12.00

ALPHAO	DZ	MACH	DX	DY	BETAO	PHI	ALPHAW	BETA	CL	CD	CLM
14.807	2.070	.60080	-.38660	10.63100	-4.34420	7.50000	5.88990	.00980	.28360	.08240	.22010
14.795	5.159	.60030	-.60460	10.62780	-4.34220	7.50000	5.88820	.01080	.29430	.08340	.20550
14.785	9.244	.59950	-.68860	10.62780	-4.34200	7.50000	5.88130	.00310	.31270	.08490	.17570
14.782	17.214	.60030	-1.43520	10.62940	-4.34560	7.50000	5.86420	.01620	.35310	.09090	.10300
14.782	31.661	.59940	-2.42880	10.65410	-4.35590	7.50000	5.84360	.01300	.40350	.09560	.02860
14.778	47.097	.60050	-3.49310	10.68970	-4.36210	7.50000	5.83380	.01160	.43530	.09830	-.00350
14.777	61.842	.60050	-4.52010	10.68370	-4.37040	7.50000	5.83040	.02120	.45670	.09890	-.02440
	GRADIENT	-.00017	-.06996	-.00042	.00029	.00000	-.00122	-.00098	.00408	.00035	-.00625

CA20 747/1 01 S1 CARRIER DATA (RGN0991) (01 DEC 75)

REFERENCE DATA

SREF = 5500.0000 SQ.FT. XMRP = 1339.9000 IN.XC
LREF = 327.7800 IN. YMRP = .0000 IN.YC
BREF = 2348.0400 IN. ZMRP = 190.8000 IN.ZC
SCALE = .0300

PARAMETRIC DATA

ALPHAC =	8.000	BETAC =	.000
ELV-IB =	.000	ELV-OB =	3.000
ELEVON =	5.000	MACH =	.600
BETAO =	-5.000	PHI =	7.500
DX =	.000	DY =	10.000

RUN NO. 812/ 0 RN/L = 3.26 GRADIENT INTERVAL = .00/ 12.00

ALPHAO	DZ	MACH	DX	DY	BETAO	PHI	ALPHAW	BETA	CL	CD	CLM
10.406	-.598	.60000	-.96780	10.55670	-4.93340	7.50000	9.67260	-.00310	.75270	.14330	-.02950
10.423	3.005	.60030	-1.45270	10.54650	-4.92570	7.50000	9.66800	-.00610	.76950	.14370	-.04430
10.446	7.573	.60010	-2.07700	10.53970	-4.91900	7.50000	9.66960	-.00850	.76800	.14420	-.05740
10.468	15.463	.60050	-3.15600	10.53870	-4.91500	7.50000	9.66200	-.00260	.78300	.14570	-.07270
10.541	30.172	.59930	-5.18260	10.56410	-4.91980	7.50000	9.65470	.00010	.80340	.14790	-.07840
10.563	44.935	.59930	-7.22310	10.58760	-4.92660	7.50000	9.64690	.00120	.81950	.15010	-.08210
10.667	47.483	.60010	-7.43590	10.58970	-4.92750	7.50000	9.54790	.00120	.81090	.14780	-.08210
	GRADIENT	-.00004	-.13666	-.00149	.00147	.00000	.00035	-.00053	.00186	.00011	-.00287

RUN NO. 809/ 0 RN/L = 3.27 GRADIENT INTERVAL = .00/ 12.00

ALPHAO	DZ	MACH	DX	DY	BETAO	PHI	ALPHAW	BETA	CL	CD	CLM
14.690	.880	.60010	-2.20570	10.62000	-4.36030	7.50000	9.78690	.00160	.67400	.12820	.05710
14.694	3.883	.59920	-2.61840	10.61290	-4.35390	7.50000	9.78560	-.00800	.68360	.12980	.04420
14.701	8.089	.59980	-3.19440	10.60340	-4.34950	7.50000	9.77690	.00430	.70200	.13270	.01000
14.719	15.576	.60050	-4.22500	10.60120	-4.34600	7.50000	9.76790	-.00550	.72720	.13620	-.02530
14.734	30.599	.59970	-6.31890	10.63630	-4.35490	7.50000	9.75500	-.00450	.76950	.14240	-.06310
14.751	45.433	.60000	-8.39220	10.65290	-4.36030	7.50000	9.74330	-.00010	.79590	.14640	-.06890
14.752	60.072	.59990	-10.42840	10.66490	-4.36690	7.50000	9.73740	.00100	.81290	.14930	-.07430
	GRADIENT	-.00003	-.13714	-.00230	.00147	.00000	-.00145	.00054	.00392	.00063	-.00793

CA20 747/1 01 S1 CARRIER DATA (RGH100) (01 DEC 75)

REFERENCE DATA

SREF = 5500.0000 SQ.FT. XMRP = 1339.9000 IN.XC
LREF = 327.7800 IN. YMRP = .0000 IN.YC
BREF = 2348.0400 IN. ZMRP = 190.8000 IN.ZC
SCALE = .0300

PARAMETRIC DATA

ALPHAC =	4.000	BETAC =	5.000
ELV-1B =	.000	ELV-0B =	3.000
ELEVON =	5.000	MACH =	.600
BETAO =	-5.000	PHI =	7.500
DX =	.000	DY =	10.000

RUN NO. 802/ 0 RN/L = 3.31 GRADIENT INTERVAL = .00/ 12.00

ALPHAO	DZ	MACH	DX	DY	BETAO	PHI	ALPHAW	BETA	CL	CD	CLM
10.632	.542	.60000	.66220	9.42040	-4.89370	7.50000	5.84060	4.96470	.37970	.08560	.08650
10.612	3.385	.60040	.47030	9.42520	-4.89960	7.50000	5.83720	4.97190	.38890	.08800	.07110
10.597	7.664	.60000	.18040	9.43110	-4.90530	7.50000	5.83210	4.98920	.40200	.09050	.04270
10.597	15.623	.60080	-.35820	9.44230	-4.91010	7.50000	5.82130	4.96770	.42460	.09300	.00730
10.604	30.599	.59980	-1.38180	9.45100	-4.91870	7.50000	5.81040	4.98430	.45370	.09430	-.02430
10.607	45.321	.60010	-2.36970	9.46750	-4.92620	7.50000	5.80330	4.97660	.47330	.09480	-.04330
10.608	47.816	.59960	-2.56310	9.47050	-4.92700	7.50000	5.80230	4.98460	.47580	.09470	-.04440
	GRADIENT	-.00001	-.06765	.00149	-.00160	.00000	-.00119	.00349	.00313	.00068	-.00645

RUN NO. 807/ 0 RN/L = 3.28 GRADIENT INTERVAL = .00/ 12.00

ALPHAO	DZ	MACH	DX	DY	BETAO	PHI	ALPHAW	BETA	CL	CD	CLM
14.862	2.028	.59920	-.38040	9.55980	-4.33510	7.50000	5.85930	4.97110	.30360	.07800	.18400
14.831	4.948	.60030	-.59900	9.55940	-4.33560	7.50000	5.85320	4.97710	.31380	.07830	.15750
14.807	9.169	.60040	-.87690	9.56420	-4.33950	7.50000	5.84700	4.98400	.33050	.08130	.12810
14.793	16.781	.59910	-1.40070	9.56640	-4.34260	7.50000	5.83710	4.98590	.36340	.08700	.07730
14.783	31.685	.59990	-2.41640	9.57980	-4.35320	7.50000	5.81770	4.99580	.40910	.09160	.01390
14.782	46.800	.60030	-3.45430	9.59590	-4.35650	7.50000	5.80880	4.98200	.43960	.09330	-.01770
14.777	61.689	.60060	-4.49120	9.60740	-4.36720	7.50000	5.80130	4.99120	.45970	.09390	-.03410
	GRADIENT	.00016	-.06814	.00085	-.00064	.00000	-.00170	.00179	.00384	.00048	-.00777

ORIGINAL PAGE IS
OF POOR QUALITY

DATE 01 DEC 75 TABULATED SOURCE DATA - CA20

CA20 747/1 01 S1 CARRIER DATA (RGN1011 (01 DEC 75)

REFERENCE DATA

SREF =	5500.0000 SQ.FT.	XMRP =	1339.9000 IN.XC
LREF =	327.7800 IN.	YMRP =	.0000 IN.YC
BREF =	2348.8400 IN.	ZMRP =	190.8000 IN.ZC
SCALE =	.0300		

PARAMETRIC DATA

ALPHAC =	8.000	BETAC =	5.000
ELV-IB =	.000	ELV-OB =	3.000
ELEVON =	5.000	MACH =	.600
BETAO =	-5.000	PHI =	7.500
DX =	.000	DY =	10.000

RUN NO. 813/ 0 RN/L = 3.25 GRADIENT INTERVAL = .00/ 12.00

ALPHAO	DZ	MACH	DX	DY	BETAO	PHI	ALPHAW	BETA	CL	CD	CLM
10.452	-.442	.59950	-1.00350	9.33640	-4.90170	7.50000	9.67500	5.00340	.76360	.14060	-.07140
10.446	3.090	.59940	-1.48320	9.34360	-4.90830	7.50000	9.67640	4.99520	.76580	.14100	-.07960
10.457	7.446	.59950	-2.07650	9.33990	-4.90990	7.50000	9.67680	5.00300	.77080	.14150	-.08780
10.492	15.406	.60030	-3.16620	9.35320	-4.91170	7.50000	9.67040	4.99840	.78190	.14280	-.09910
10.544	30.322	.59990	-5.21950	9.36460	-4.91650	7.50000	9.66170	5.00330	.80050	.14480	-.10590
10.565	44.366	.60030	-7.24190	9.38730	-4.92340	7.50000	9.65800	4.99650	.81730	.14680	-.11020
10.568	47.470	.59940	-7.59050	9.39030	-4.92370	7.50000	9.65730	4.99660	.81930	.14690	-.10970
	GRADIEN.	.00002	-.13620	-.00085	-.00037	.00000	.00009	.00179	.00115	.00011	-.00188

RUN NO. 808/ 0 RN/L = 3.28 GRADIENT INTERVAL = .00/ 12.00

ALPHAO	DZ	MACH	DX	DY	BETAO	PHI	ALPHAW	BETA	CL	CD	CLM
14.737	1.500	.59960	-2.26980	9.52040	-4.34530	7.50000	9.70840	4.96760	.68930	.12200	.00810
14.727	4.732	.59970	-2.70730	9.51530	-4.34640	7.50000	9.70310	4.97450	.69760	.12460	-.00960
14.725	9.125	.60070	-3.30300	9.50660	-4.34710	7.50000	9.69750	4.99770	.71320	.12800	-.03670
14.735	16.820	.59920	-4.35290	9.50260	-4.34540	7.50000	9.68920	4.98480	.73190	.13130	-.05970
14.755	31.671	.60060	-6.39490	9.52470	-4.35200	7.50000	9.67960	4.98700	.76220	.13750	-.08380
14.761	46.654	.60030	-8.45280	9.53750	-4.35700	7.50000	9.67160	4.98740	.78510	.14110	-.09260
14.756	61.712	.60010	-10.55320	9.56010	-4.36580	7.50000	9.66500	4.98910	.80390	.14410	-.10250
	GRADIENT	.00015	-.13552	-.00182	-.00023	.00000	-.00142	.00403	.00316	.00079	-.00589

CA20 747/1 01 S1 CARRIER DATA (RGN102) (01 DEC 75)

REFERENCE DATA

SREF =	5500.0000 SQ.FT.	XMRP =	1339.9000 IN.XC
LREF =	327.7800 IN.	YMRP =	.0000 IN.YC
BREF =	2349.0400 IN.	ZMRP =	190.8000 IN.ZC
SCALE =	.0300		

PARAMETRIC DATA

ALPHAC =	4.000	BETAC =	-5.000
ELV-IB =	.000	ELV-OB =	3.000
ELEVON =	5.000	MACH =	.600
BETAO =	-5.000	PHI =	7.500
DX =	.000	DY =	10.000

RUN NO. 815/ 0 RN/L = 3.28 GRADIENT INTERVAL = .00/ 12.00

ALPHAO	DZ	MACH	DX	DY	BETAO	PHI	ALPHAH	BETA	CL	CD	CLH
14.780	1.983	.60070	-.39550	11.56920	-4.33750	7.50000	5.87520	-4.98760	.30440	.08300	.11370
14.773	4.801	.60000	-.59210	11.57770	-4.33630	7.50000	5.87430	-4.98050	.30800	.08400	.12760
14.771	9.259	.59970	-.89880	11.57780	-4.33780	7.50000	5.86980	-4.96350	.32620	.08570	.10720
14.770	16.962	.60030	-1.42840	11.59840	-4.34500	7.50000	5.86010	-4.97990	.35380	.08950	.07910
14.773	31.562	.60000	-2.43150	11.62830	-4.35920	7.50000	5.84300	-4.97290	.40060	.09230	.02360
14.769	46.760	.60020	-3.47550	11.64520	-4.36560	7.50000	5.82880	-4.97390	.43190	.09350	-.00420
14.768	61.866	.60010	-4.51840	11.66000	-4.37310	7.50000	5.82040	-4.97220	.45440	.09370	-.02530
	GRADIENT	-.00013	-.06913	.00096	-.00007	-.00030	-.00077	.00336	.00309	.00037	-.00123

CA20 747/1 01 S1 CARRIER DATA (RGN103) (01 DEC 75)

REFERENCE DATA

SREF =	5500.0000 SQ.FT.	XMRP =	1339.9000 IN.XC
LREF =	327.7800 IN.	YMRP =	.0000 IN.YC
BREF =	2349.0400 IN.	ZMRP =	190.8000 IN.ZC
SCALE =	.0300		

PARAMETRIC DATA

ALPHAC =	4.000	BETAC =	.000
ELV-IB =	.000	ELV-OB =	3.000
ELEVON =	5.000	MACH =	.600
BETAO =	-5.000	PHI =	7.500
DX =	.000	DY =	10.000

RUN NO. 814/ 0 RN/L = 3.24 GRADIENT INTERVAL = .00/ 12.00

ALPHAO	DZ	MACH	DX	DY	BETAO	PHI	ALPHAH	BETA	CL	CD	CLH
14.793	2.161	.60000	-.39170	10.63030	-4.34420	7.50000	5.88550	-.01290	.28290	.08270	.21800
14.782	5.231	.59970	-.60470	10.62790	-4.34280	7.50000	5.87880	-.01210	.29470	.08310	.20400
14.771	9.123	.59920	-.87590	10.62870	-4.34290	7.50000	5.87490	-.02000	.31120	.08470	.17410
14.766	16.756	.59950	-1.40020	10.62590	-4.34500	7.50000	5.86050	-.01430	.35060	.09070	.10490
14.769	31.625	.60020	-2.41880	10.65530	-4.35590	7.50000	5.83930	-.02550	.40260	.09540	.03050
14.767	46.769	.60020	-3.46380	10.66050	-4.36120	7.50000	5.82970	-.01910	.43390	.09810	-.00230
14.766	61.571	.59950	-4.49070	10.67110	-4.36830	7.50000	5.82390	-.00940	.45540	.09900	-.02360
	GRADIENT	-.00012	-.06955	-.00021	.00018	.00000	-.00150	-.00106	.00407	.00029	-.00637

ORIGINAL PAGE IS
OF POOR QUALITY

CA20 747/1 01 S1 CARRIER DATA (RGN1094) (01 DEC 75)

REFERENCE DATA

SREF = 5500.0000 SQ.FT. XMRP = 1339.9000 IN.XC
LREF = 327.7800 IN. YMRP = .0000 IN.YC
BREF = 2348.0400 IN. ZMRP = 190.9000 IN.ZC
SCALE = .0300

PARAMETRIC DATA

ALPHAC = 4.000 BETAC = -5.000
ELV-IB = .000 ELV-OB = 3.000
ELEVON = 5.000 MACH = .600
BETAO = -5.000 PHI = .000
DX = 10.000 DY = .000

RUN NO. 830/ 0 RN/L = 3.29 GRADIENT INTERVAL = .00/ 12.00

ALPHAO	DZ	MACH	DX	DY	BETAO	PHI	ALPHAW	BETA	CL	CD	CLM
10.325	-1.343	.60050	10.81020	2.27280	-5.21650	.00000	5.82520	-4.95370	.41210	.08890	.05500
10.312	1.825	.60080	10.60190	2.28000	-5.21910	.00000	5.82640	-4.94080	.40790	.08880	.05740
10.306	6.300	.60070	10.30090	2.29610	-5.22500	.00000	5.82270	-4.94040	.41770	.09030	.04470
10.313	13.460	.60000	9.78720	2.31560	-5.23200	.00000	5.81650	-4.94080	.43410	.09220	.01200
10.331	28.680	.60030	8.77630	2.34420	-5.24080	.00000	5.80760	-4.95590	.45780	.09310	-.01890
10.341	43.881	.60040	7.73970	2.34160	-5.24020	.00000	5.79900	-4.93970	.47490	.09360	-.03770
	GRADIENT	-.00002	-.06726	.00360	-.00132	.00000	-.00083	.00009	.00219	.00034	-.00507

RUN NO. 835/ 0 RN/L = 3.27 GRADIENT INTERVAL = .00/ 12.00

ALPHAO	DZ	MACH	DX	DY	BETAO	PHI	ALPHAW	BETA	CL	CD	CLM
14.692	1.273	.60040	9.46210	2.19680	-5.18550	.00000	5.85310	-4.95420	.33700	.07860	.19210
14.668	4.371	.60000	9.25780	2.20450	-5.19130	.00000	5.84860	-4.94840	.34160	.07950	.17950
14.657	8.918	.60010	8.95000	2.21850	-5.19620	.00000	5.84580	-4.94910	.35550	.08300	.14820
14.654	16.303	.59960	8.44280	2.24340	-5.21370	.00000	5.83620	-4.94140	.38070	.08700	.09110
14.657	31.560	.59910	7.39910	2.26540	-5.21060	.00000	5.82260	-4.94510	.41790	.09110	.02750
14.663	46.389	.59940	6.38570	2.27270	-5.21250	.00000	5.81280	-4.94650	.44320	.09220	-.00420
14.672	61.453	.59910	5.36270	2.25720	-5.21370	.00000	5.80460	-4.94790	.45950	.09270	-.02390
	GRADIENT	-.00003	-.06704	.00286	-.00138	.00000	-.00093	.00061	.00247	.00059	-.00583

CA20 747/1 01 S1 CARRIER DATA (RGN105) (01 DEC 75)

REFERENCE DATA

SREF =	5500.0000 SQ.FT.	XMRP =	1339.9000 IN.XC		
LREF =	327.7800 IN.	YMRP =	.0000 IN.YC		
BREF =	2348.0400 IN.	ZMRP =	190.8000 IN.ZC		
SCALE =	.0300				

PARAMETRIC DATA

ALPHAC =	8.000	EETAC =	-5.000
ELV-IB =	.000	ELV-OB =	3.000
ELEVON =	5.000	MACH =	.600
BETAO =	-5.000	PHI =	.000
DX =	10.000	DY =	.000

RUN NO. 841/ 0 RN/L = 3.26 GRADIENT INTERVAL = .00/ 12.00

ALPHAO	DZ	MACH	DX	DY	BETAO	PHI	ALPHAH	BETA	CL	CD	CLH
10.296	-3.049	.60000	9.37130	2.28520	-5.19050	.00000	9.65170	-5.00970	.79020	.14090	-.09590
10.307	-.020	.60070	8.97290	2.29580	-5.19890	.00000	9.65150	-5.00360	.78320	.13870	-.08090
10.328	4.578	.59940	8.34450	2.32580	-5.21110	.00000	9.65270	-5.00320	.76570	.13890	-.08590
10.359	12.050	.59930	7.32250	2.35920	-5.22350	.00000	9.65220	-5.01160	.79360	.13970	-.08880
10.437	27.168	.59920	5.23740	2.39020	-5.23710	.00000	9.64590	-5.00940	.81080	.14080	-.09720
10.469	41.982	.60070	3.20170	2.39590	-5.24060	.00000	9.63980	-4.99400	.82500	.14230	-.09820
	GRADIENT	.00000	.00000	.00000	.00000	.00000	.00000	.00000	.00000	.00000	.00000

RUN NO. 836/ 0 RN/L = 3.31 GRADIENT INTERVAL = .00/ 12.00

ALPHAO	DZ	MACH	DX	DY	BETAO	PHI	ALPHAH	BETA	CL	CD	CLH
14.545	-.709	.60080	7.91490	2.17100	-5.16670	.00000	9.68170	-4.94920	.71310	.12590	.04110
14.535	2.486	.60040	7.49070	2.19280	-5.17490	.00000	9.68270	-4.94640	.71570	.12700	.02760
14.550	7.114	.60040	6.86490	2.22060	-5.18440	.00000	9.67370	-4.94690	.72760	.12930	.00170
14.571	14.418	.60010	5.87160	2.24480	-5.19520	.00000	9.66760	-4.94090	.74730	.13210	-.02850
14.610	29.342	.59920	3.82640	2.27660	-5.20660	.00000	9.66010	-4.94920	.77140	.13530	-.05980
14.638	44.463	.60030	1.75100	2.28750	-5.21020	.00000	9.65230	-4.94820	.79330	.13750	-.07580
14.650	59.174	.60010	-.27960	2.28950	-5.21320	.00000	9.64650	-4.94020	.80950	.13990	-.08540
	GRADIENT	.00000	-.13522	.00601	-.00207	.00000	-.00194	-.00011	.00257	.00050	-.00560

CA20 747/1 01 S1 CARRIER DATA (RGN106) (01 DEC 75)

REFERENCE DATA

SREF = 5500.0000 SQ.FT. XMRP = 1339.9000 IN.XC
LREF = 327.7800 IN. YMRP = .0000 IN.YC
BREF = 2348.0400 IN. ZMRP = 190.8000 IN.ZC
SCALE = .0300

PARAMETRIC DATA

ALPHAC =	4.000	BETAC =	-5.000
ELV-IB =	.000	ELV-OB =	3.000
ELEVON =	5.000	MACH =	.600
BETAO =	-5.000	PHI =	.000
DX =	.000	DY =	10.000

RUN NO. 844/ 0 RN/L = 3.30 GRADIENT INTERVAL = .00/ 12.00

ALPHAO	DZ	MACH	DX	DY	BETAO	PHI	ALPHAH	BETA	CL	CD	CLM
10.440	-.766	.59920	.77820	11.46600	-5.24580	.00000	5.84320	-4.97280	.39050	.09120	.00650
10.421	2.266	.59970	.58010	11.45390	-5.23960	.00000	5.84170	-4.95410	.39510	.09140	.01540
10.417	6.604	.59950	.28450	11.45320	-5.23900	.00000	5.83810	-4.95640	.40510	.09220	.01090
10.423	14.060	.59930	-.22360	11.46500	-5.24390	.00000	5.82680	-4.96580	.42490	.09360	-.00440
10.442	29.201	.60090	-1.26380	11.49370	-5.25780	.00000	5.82110	-4.99170	.45300	.09470	-.02590
10.451	44.256	.59990	-2.29630	11.50700	-5.26440	.00000	5.81170	-4.98130	.47240	.09460	-.03710
	GRADIENT	-.00005	-.06815	-.00016	.00014	.00000	-.00083	.00178	.00231	.00018	-.00104

CA20 747/1 01 S1 CARRIER DATA (RGN107) (01 DEC 75)

REFERENCE DATA

SREF = 5500.0000 SQ.FT. XMRP = 1339.9000 IN.XC
LREF = 327.7800 IN. YMRP = .0000 IN.YC
BREF = 2348.0400 IN. ZMRP = 190.8000 IN.ZC
SCALE = .0300

PARAMETRIC DATA

ALPHAC =	4.000	BETAC =	-5.000
ELV-IB =	.000	ELV-OB =	3.000
ELEVON =	5.000	MACH =	.600
BETAO =	-5.000	PHI =	.000
DX =	10.000	DY =	10.000

RUN NO. 819/ 0 RN/L = 3.26 GRADIENT INTERVAL = .00/ 12.00

ALPHAO	DZ	MACH	DX	DY	BETAO	PHI	ALPHAH	BETA	CL	CD	CLM
10.347	-1.294	.60000	10.79930	12.27000	-5.22040	.00000	5.82480	-4.94250	.41660	.09040	-.00020
10.332	1.624	.59960	10.60860	12.25380	-5.21300	.00000	5.82770	-4.94090	.41520	.09010	.01550
10.329	6.160	.59980	10.30320	12.25660	-5.21390	.00000	5.82490	-4.94060	.42300	.09110	.01110
10.340	13.665	.59960	9.79210	12.26900	-5.21790	.00000	5.81970	-4.94960	.43750	.09260	-.00570
10.361	28.609	.60000	8.77050	12.29260	-5.22970	.00000	5.81120	-4.95700	.46120	.09370	-.02580
10.373	43.844	.59970	7.72830	12.30200	-5.23610	.00000	5.80290	-4.94920	.47750	.09410	-.04030
	GRADIENT	.00004	-.06732	.00062	-.00020	.00000	-.00062	.00007	.00172	.00022	-.00097

CA20 747/1 01 SI CARRIER DATA (RGN107) (01 DEC 75)

REFERENCE DATA

SREF = 5500.0000 SQ.FT. XMRP = 1339.9000 IN.XC
LREF = 327.7800 IN. YMRP = .0000 IN.YC
BREF = 2348.0400 IN. ZMRP = 190.8000 IN.ZC
SCALE = .0300

PARAMETRIC DATA

ALPHAC =	4.000	BETAC =	-5.000
ELV-IB =	.000	ELV-OB =	3.000
ELEVON =	5.000	MACH =	.600
BETAO =	-5.000	PHI =	.000
DX =	10.000	DY =	10.000

RUN NO. 820/ 0 RN/L = 3.24 GRADIENT INTERVAL = .00/ 12.00

ALPHAO	DZ	MACH	DX	DY	BETAO	PHI	ALPHAH	BETA	CL	CD	CLM
14.674	2.198	.59990	9.40120	12.14780	-5.18880	.00000	5.84790	-4.94690	.35920	.08020	.10290
14.656	5.136	.59950	9.20660	12.15380	-5.18230	.00000	5.84880	-4.94700	.35780	.08130	.11920
14.650	9.779	.59920	8.89000	12.15850	-5.18330	.00000	5.84540	-4.94090	.36770	.08530	.10140
14.655	17.264	.60090	8.38210	12.17450	-5.18990	.00000	5.83750	-4.94980	.38940	.08800	.05530
14.666	32.135	.60020	7.36720	12.19480	-5.20170	.00000	5.82280	-4.94830	.42450	.09190	.01640
14.669	47.232	.59990	6.32930	12.21060	-5.20820	.00000	5.81630	-4.95250	.44780	.09310	-.00710
14.671	62.086	.60090	5.31660	12.22610	-5.21690	.00000	5.80290	-4.94930	.46510	.09350	-.02700
	GRADIENT	-.00009	-.06755	.00138	.00064	.00000	-.00037	.00084	.00121	.00069	-.00053

CA20 747/1 01 SI CARRIER DATA (RGN108) (01 DEC 75)

REFERENCE DATA

SREF = 5500.0000 SQ.FT. XMRP = 1339.9000 IN.XC
LREF = 327.7800 IN. YMRP = .0000 IN.YC
BREF = 2348.0400 IN. ZMRP = 190.8000 IN.ZC
SCALE = .0300

PARAMETRIC DATA

ALPHAC =	8.000	BETAC =	-5.000
ELV-IB =	.000	ELV-OB =	3.000
ELEVON =	5.000	MACH =	.600
BETAO =	-5.000	PHI =	.000
DX =	10.000	DY =	10.000

RUN NO. 0/ 0 RN/L = 3.24 GRADIENT INTERVAL = .00/ 12.00

ALPHAO	DZ	MACH	DX	DY	BETAO	PHI	ALPHAH	BETA	CL	CD	CLM
10.102	-2.746	.60020	9.41230	12.35040	-5.23470	.00000	9.67100	-4.96040	.79130	.14270	-.12000
10.121	.382	.60070	8.99580	12.32340	-5.21950	.00000	9.67210	-4.96600	.78800	.14120	-.10460
10.146	4.894	.60050	8.38130	12.31250	-5.21220	.00000	9.67360	-4.96550	.79030	.14120	-.09920
10.184	12.419	.59910	7.35250	12.30830	-5.21150	.00000	9.66850	-4.95820	.78660	.14160	-.09760
10.257	27.611	.59910	5.25330	12.33560	-5.22430	.00000	9.66320	-4.97280	.81380	.14290	-.09960
10.295	42.408	.60060	3.20660	12.34980	-5.23390	.00000	9.65060	-4.96480	.82790	.14370	-.09900
	GRADIENT	-.00004	-.13520	-.00242	.00162	.00000	.00033	.00011	.00051	.00000	.00120

ORIGINAL PAGE IS
OF POOR QUALITY

CA20 747/1 01 S1 CARRIER DATA (RGN108) (01 DEC 75)

REFERENCE DATA

SREF = 5500.0000 SQ.FT. XMRP = 1339.9000 IN.XC
LREF = 327.7800 IN. YMRP = .0000 IN.YC
BREF = 2348.0400 IN. ZMRP = 190.8000 IN.ZC
SCALE = .0300

PARAMETRIC DATA

ALPHAC =	8.000	BETAC =	-5.000
ELV-IB =	.000	ELV-OB =	3.000
ELEVON =	5.000	MACH =	.600
BETAO =	-5.000	PHI =	.000
DX =	10.000	DY =	10.000

RUN NO. 0/ 0 RN/L = 3.24 GRADIENT INTERVAL = .00/ 12.00

ALPHAO	DZ	MACH	DX	DY	BETAO	PHI	ALPHAH	BETA	CL	CD	CLM
14.529	-.426	.59900	7.87850	12.21900	-5.19280	.00000	9.70100	-4.94840	.71350	.12880	-.00460
14.532	2.587	.60000	7.47560	12.21350	-5.18440	.00000	9.69960	-4.94880	.71780	.13000	-.00760
14.546	7.236	.59950	6.84400	12.20290	-5.18130	.00000	9.69550	-4.94130	.72810	.13120	-.02110
14.574	14.804	.59940	5.81040	12.20650	-5.18370	.00000	9.68990	-4.94550	.74580	.13460	-.04310
14.612	29.618	.60010	3.77810	12.23240	-5.19730	.00000	9.68030	-4.95430	.77340	.13800	-.06020
14.638	44.620	.59980	1.70940	12.24440	-5.20570	.00000	9.67240	-4.94390	.79500	.14000	-.07630
14.647	59.279	.60050	-.31800	12.25690	-5.21300	.00000	9.66660	-4.94210	.81120	.14150	-.08310
	GRADIENT	-.00011	-.13586	-.00228	.00067	.00000	-.00080	.00161	.00222	.00026	-.00290

CA20 747/1 01 S1 CARRIER DATA (RGN109) (01 DEC 75)

REFERENCE DATA

SREF = 5500.0000 SQ.FT. XMRP = 1339.9000 IN.XC
LREF = 327.7800 IN. YMRP = .0000 IN.YC
BREF = 2348.0400 IN. ZMRP = 190.8000 IN.ZC
SCALE = .0300

PARAMETRIC DATA

ALPHAC =	4.000	BETAC =	.000
ELV-IB =	.000	ELV-OB =	3.000
ELEVON =	5.000	MACH =	.600
BETAO =	-5.000	PHI =	.000
DX =	10.000	DY =	.000

RUN NO. 831/ 0 RN/L = 3.27 GRADIENT INTERVAL = .00/ 12.00

ALPHAO	DZ	MACH	DX	DY	BETAO	PHI	ALPHAH	BETA	CL	CD	CLM
10.322	-1.388	.59950	10.83060	.35760	-5.24010	.00000	5.82770	.01750	.40300	.09280	.06840
10.306	1.603	.59900	10.63220	.35120	-5.23660	.00000	5.82730	.01740	.40430	.09400	.07140
10.302	6.139	.59980	10.32610	.35200	-5.23390	.00000	5.82560	.01920	.41490	.09580	.05220
10.313	13.778	.60010	9.80690	.35410	-5.23360	.00000	5.81850	.02270	.43280	.09760	.01730
10.332	28.819	.60010	8.78170	.36250	-5.23920	.00000	5.80830	.02410	.45990	.09890	-.02030
10.343	43.741	.59970	7.76010	.36160	-5.23650	.00000	5.80220	.02420	.47650	.09940	-.03980
	GRADIENT	.00018	-.06747	.00018	.00060	.00000	-.00037	.00040	.00234	.00040	-.00423

DATE 01 DEC 75 TABULATED SOURCE DATA - CA20

CA20 747/1 01 S1 CARRIER DATA (RGN109) (01 DEC 75)

REFERENCE DATA

SREF =	5500.0000 SQ.FT.	XMRP =	1339.9000 IN.XC
LREF =	327.7800 IN.	YMRP =	.0000 IN.YC
BREF =	2348.0400 IN.	ZMRP =	190.8000 IN.ZC
SCALE =	.0300		

PARAMETRIC DATA

ALPHAC =	4.000	BETAC =	.000
ELV-IB =	.000	ELV-OB =	3.000
ELEVON =	5.000	MACH =	.600
BETAO =	-5.000	PHI =	.000
DX =	10.000	DY =	.000

RUN NO. 834/ 0 RN/L = 3.28 GRADIENT INTERVAL = .00/ 12.00

ALPHAO	DZ	MACH	DX	DY	BETAO	PHI	ALPHAH	BETA	CL	CD	CLM
14.694	.928	.60020	9.50130	.34230	-5.20480	.00000	5.85520	.04520	.32980	.08070	.21050
14.678	3.997	.60080	9.29690	.34420	-5.20390	.00000	5.85320	.04700	.33500	.08260	.19870
14.669	8.486	.60030	8.99580	.35120	-5.20340	.00000	5.84700	.04140	.35110	.08680	.16320
14.660	16.091	.60010	8.47870	.35490	-5.20500	.00000	5.83780	.05340	.38060	.09170	.09810
14.656	31.106	.59990	7.44890	.37940	-5.20880	.00000	5.82070	.05560	.41970	.09580	.02930
14.662	46.023	.60010	6.42710	.37940	-5.20940	.00000	5.81320	.05490	.44650	.09730	-.00300
14.673	60.943	.59930	5.41320	.35910	-5.21050	.00000	5.80510	.06210	.46250	.09800	-.02300
	GRADIENT	.00000	-.06689	.00121	.00018	.00000	-.00111	-.00056	.00287	.00082	-.00638

CA20 747/1 01 S1 CARRIER DATA (RGN110) (01 DEC 75)

REFERENCE DATA

SREF =	5500.0000 SQ.FT.	XMRP =	1339.9000 IN.XC
LREF =	327.7800 IN.	YMRP =	.0000 IN.YC
BREF =	2348.0400 IN.	ZMRP =	190.8000 IN.ZC
SCALE =	.0300		

PARAMETRIC DATA

ALPHAC =	8.000	BETAC =	.000
ELV-IB =	.000	ELV-OB =	3.000
ELEVON =	5.000	MACH =	.600
BETAO =	-5.000	PHI =	.000
DX =	10.000	DY =	.000

RUN NO. 840/ 0 RN/L = 3.28 GRADIENT INTERVAL = .00/ 12.00

ALPHAO	DZ	MACH	DX	DY	BETAO	PHI	ALPHAH	BETA	CL	CD	CLM
10.304	-3.002	.60080	9.37460	.38610	-5.26550	.00000	9.65720	.05380	.78380	.14600	-.08630
10.306	-.075	.59930	8.98600	.36130	-5.24900	.00000	9.65830	.05400	.78070	.14520	-.07390
10.328	4.516	.59980	8.36210	.34360	-5.23870	.00000	9.65690	.05260	.78460	.14550	-.07400
10.360	12.075	.59940	7.33520	.33740	-5.23350	.00000	9.64850	.05410	.79520	.14610	-.08050
10.425	26.946	.60020	5.29150	.34810	-5.23860	.00000	9.64510	.05470	.81150	.14760	-.08340
10.467	42.070	.59950	3.20180	.35070	-5.23780	.00000	9.64320	.05490	.82360	.14940	-.08290
	GRADIENT	.00000	.00000	.00000	.00000	.00000	.00000	.00000	.00000	.00000	.00000

DATE 01 DEC 75 TABULATED SOURCE DATA - CA20

CA20 747/1 01 S1 CARRIER DATA (RGN110) (01 DEC 75)

REFERENCE DATA

SREF =	5500.0000 SQ.FT.	XMRP =	1339.9000 IN.XC		
LREF =	327.7800 IN.	YMRP =	.0000 IN.YC		
BREF =	2348.0400 IN.	ZMRP =	190.8000 IN.ZC		
SCALE =	.0300				

PARAMETRIC DATA

ALPHAC =	8.000	BETAC =	.000
ELV-IB =	.000	ELV-OB =	3.000
ELEVON =	5.000	MACH =	.600
BETAO =	-5.000	PHI =	.000
DX =	10.000	DY =	.000

RUN NO. 837/ 0 RN/L = 3.29 GRADIENT INTERVAL = .00/ 12.00

ALPHAO	DZ	MACH	DX	DY	BETAO	PHI	ALPHAH	BETA	CL	CD	CLM
14.301	-2.363	.59980	8.18810	.38570	-5.22010	.00000	9.68140	.00420	.71220	.13240	.04040
14.539	-1.012	.60010	7.96770	.38570	-5.21720	.00000	9.68610	.00410	.71190	.13230	.04150
14.492	1.816	.60010	7.59820	.37440	-5.21070	.00000	9.68190	.00420	.71740	.13380	.03510
14.537	2.114	.60080	7.55200	.37380	-5.21060	.00000	9.68180	.00420	.71770	.13390	.03400
14.547	6.572	.60090	6.95140	.36650	-5.20600	.00000	9.67480	.01540	.72970	.13570	.01060
14.576	14.073	.59990	5.93050	.36460	-5.20440	.00000	9.67030	.01810	.74710	.13800	-.02080
14.612	29.194	.60010	3.86470	.37730	-5.20900	.00000	9.66010	.01160	.77500	.14130	-.05240
14.641	44.237	.60050	1.79770	.37490	-5.20970	.00000	9.65280	.01810	.79620	.14430	-.06420
14.651	58.932	.59980	-.22740	.37670	-5.21130	.00000	9.64550	.01740	.81080	.14650	-.07240
	GRADIENT	.00010	-.13545	-.00165	.00101	.00000	-.00153	.00242	.00263	.00040	-.00519

CA20 747/1 01 S1 CARRIER DATA (RGN111) (01 DEC 75)

REFERENCE DATA

SREF =	5500.0000 SQ.FT.	XMRP =	1339.9000 IN.XC		
LREF =	327.7800 IN.	YMRP =	.0000 IN.YC		
BREF =	2348.0400 IN.	ZMRP =	190.8000 IN.ZC		
SCALE =	.0300				

PARAMETRIC DATA

ALPHAC =	4.000	BETAC =	.000
ELV-IB =	.000	ELV-OB =	3.000
ELEVON =	5.000	MACH =	.600
BETAO =	-5.000	PHI =	.000
DX =	.000	DY =	10.000

RUN NO. 843/ 0 RN/L = 3.33 GRADIENT INTERVAL = .00/ 12.00

ALPHAO	DZ	MACH	DX	DY	BETAO	PHI	ALPHAH	BETA	CL	CD	CLM
10.446	-.843	.60040	.80510	10.38400	-5.24130	.00000	5.84880	.06030	.37410	.09340	.09680
10.429	2.180	.59950	.59930	10.39070	-5.23930	.00000	5.84800	.05820	.38310	.09470	.08190
10.422	6.658	.59940	.29520	10.38630	-5.23920	.00000	5.84290	.06270	.39750	.09630	.05810
10.430	14.218	.59930	-.22540	10.38990	-5.24230	.00000	5.83930	.05110	.42050	.09770	.02160
10.443	29.284	.60070	-1.25240	10.40340	-5.25400	.00000	5.82280	.05830	.45290	.09950	-.01670
10.450	44.292	.60010	-2.28200	10.41680	-5.26110	.00000	5.81300	.05180	.47320	.09980	-.03570
	GRADIENT	-.00002	-.06791	-.00098	.00002	.00000	-.00114	.00100	.00322	.00036	-.00532

CA20 747/1 01 S1 CARRIER DATA (RGN112) (01 DEC 75)

REFERENCE DATA

SREF = 5500.0000 SQ.FT. XMRP = 1339.8000 IN.XC
LREF = 327.7800 IN. YMRP = .0000 IN.YC
BREF = 2348.0400 IN. ZMRP = 190.8000 IN.ZC
SCALE = .0300

PARAMETRIC DATA

ALPHAC =	4.000	BETAC =	.000
ELV-IB =	.000	ELV-OB =	3.000
ELEVON =	5.000	MACH =	.600
BETAO =	-5.000	PHI =	.000
DX =	10.000	DY =	10.000

RUN NO. 818/ 0 RN/L = 3.27 GRADIENT INTERVAL = .00/ 12.00

ALPHAO	DZ	MACH	DX	DY	BETAO	PHI	ALPHAW	BETA	CL	CD	CLM
10.351	-1.302	.59940	10.82050	10.31730	-5.21620	.00000	5.83140	.07500	.40350	.09390	.07920
10.339	1.671	.60090	10.62210	10.32040	-5.21560	.00000	5.83320	.07410	.40540	.09440	.08120
10.338	6.235	.60090	10.31230	10.31910	-5.21570	.00000	5.82900	.07090	.41730	.09580	.05590
10.344	13.633	.60080	9.81000	10.31680	-5.21750	.00000	5.82270	.06730	.43470	.09700	.02140
10.363	28.774	.60000	8.77700	10.32690	-5.22650	.00000	5.81020	.07450	.46220	.09880	-.01840
10.378	43.866	.60060	7.73840	10.34080	-5.23270	.00000	5.80630	.06750	.47890	.09930	-.03880
	GRADIENT	.00000	-.06788	-.00028	-.00002	.00000	-.00092	-.00070	.00261	.00031	-.00554

RUN NO. 821/ 0 RN/L = 3.24 GRADIENT INTERVAL = .0[illegible] 12.00

ALPHAO	DZ	MACH	DX	DY	BETAO	PHI	ALPHAW	BETA	CL	CD	CLM
14.674	1.871	.59920	9.44540	10.32750	-5.18870	.00000	5.85980	.03760	.32970	.08200	.22160
14.654	4.908	.60040	9.24120	10.33400	-5.18670	.00000	5.85820	.03530	.33810	.08430	.20060
14.651	9.491	.59950	8.92720	10.34080	-5.18670	.00000	5.85220	.01460	.35510	.08800	.16010
14.654	16.765	.60000	8.43180	10.34180	-5.18880	.00000	5.84220	.01970	.38190	.09150	.09730
14.662	31.845	.59930	7.40100	10.36010	-5.19990	.00000	5.82760	.00710	.42210	.09530	.02780
14.672	46.937	.59980	6.36530	10.36580	-5.20490	.00000	5.81740	.01960	.44900	.09720	-.00240
14.669	61.691	.59950	5.35330	10.37880	-5.21170	.00000	5.80840	.02060	.46680	.09800	-.02470
	GRADIENT	.00002	-.06804	.00172	.00024	.00000	-.00090	-.00314	.00335	.00079	-.00813

CA20 747/1 01 L1 CARRIER DATA (RGN113) (01 DEC 75)

REFERENCE DATA

SREF = 5500.0000 SQ.FT. XMRP = 1339.9000 IN.XC
LREF = 327.7800 IN. YMRP = .0000 IN.YC
BREF = 2348.0400 IN. ZMRP = 190.8000 IN.ZC
SCALE = .0300

PARAMETRIC DATA

ALPHAC =	8.000	BETAC =	.000
ELV-IB =	.000	ELV-OB =	3.000
ELEVON =	5.000	MACH =	.600
BETAO =	-5.000	PHI =	.000
DX =	.000	DY =	10.000

RUN NO. 846/ 0 RN/L = 3.27 GRADIENT INTERVAL = .00/ 12.00

ALPHAO	DZ	MACH	DX	DY	BETAO	PHI	ALPHAH	BETA	CL	CD	CLM
14.683	-.234	.59920	-2.08110	10.45250	-5.22980	.00000	9.71210	.05500	.67880	.12950	.05430
14.684	2.631	.59940	-2.49430	10.44140	-5.22280	.00000	9.70900	.05080	.68800	.13090	.03410
14.673	7.169	.59980	-3.08220	10.42750	-5.21910	.00000	9.70290	.05560	.70530	.13280	.00570
14.695	14.825	.60010	-4.12640	10.41340	-5.21700	.00000	9.69360	.04350	.73160	.13600	-.03120
14.718	29.804	.59910	-6.18250	10.41430	-5.22390	.00000	9.68120	.04930	.76680	.14050	-.06450
14.736	44.793	.60010	-8.24790	10.42500	-5.23080	.00000	9.67210	.05230	.79230	.14410	-.07370
14.745	59.569	.60000	-10.29910	10.44120	-5.24020	.00000	9.66870	.05370	.80850	.14670	-.07890
	GRADIENT	.00009	-.13553	-.00320	.00085	.00000	-.00141	.00111	.00359	.00044	-.00655

CA20 747/1 01 S1 CARRIER DATA (RGN114) (01 DEC 75)

REFERENCE DATA

SREF = 5500.0000 SQ.FT. XMRP = 1339.9000 IN.XC
LREF = 327.7800 IN. YMRP = .0000 IN.YC
BREF = 2348.0400 IN. ZMRP = 190.8000 IN.ZC
SCALE = .0300

PARAMETRIC DATA

ALPHAC =	8.000	BETAC =	.000
ELV-IB =	.000	ELV-OB =	3.000
ELEVON =	5.000	MACH =	.600
BETAO =	-5.000	PHI =	.000
DX =	10.000	DY =	10.000

RUN NO. 827/ 0 RN/L = 3.23 GRADIENT INTERVAL = .00/ 12.00

ALPHAO	DZ	MACH	DX	DY	BETAO	PHI	ALPHAH	BETA	CL	CD	CLM
10.123	-2.709	.59950	9.42810	10.35950	-5.22610	.00000	9.67390	.08450	.78710	.14710	-.06170
10.130	.522	.59900	8.99410	10.33760	-5.22180	.00000	9.67420	.09590	.78660	.14650	-.06190
10.153	4.892	.59920	8.39770	10.32390	-5.21740	.00000	9.67530	.09450	.79020	.14640	-.06800
10.189	12.431	.60030	7.36470	10.32290	-5.21670	.00000	9.67190	.07600	.80050	.14690	-.07740
10.262	27.432	.59980	5.29070	10.32470	-5.22390	.00000	9.66550	.08520	.81530	.14840	-.08290
10.293	42.263	.60050	3.24330	10.33450	-5.23260	.00000	9.66240	.09340	.82750	.15020	-.08250
	GRADIENT	.00005	-.13678	-.00314	.00101	.00000	.00025	-.00055	.00083	-.00002	-.00140

CA20 747/1 01 S1 CARRIER DATA (RGN114) (01 DEC 75)

REFERENCE DATA

SREF = 5500.0000 SQ.FT. XMRP = 1339.9000 IN.XC
LREF = 327.7800 IN. YMRP = .0000 IN.YC
BREF = 2348.0400 IN. ZMRP = 190.8000 IN.ZC
SCALE = .0300

PARAMETRIC DATA

ALPHAC =	8.000	BETAC =	.000
ELV-IB =	.000	ELV-OB =	3.000
ELEVON =	5.000	MACH =	.600
BETAO =	-5.000	PHI =	.000
DX =	10.000	DY =	10.000

RUN NO. 624/ 0 RN/L = 3.23 GRADIENT INTERVAL = .00/ 12.00

ALPHAO	DZ	MACH	DX	DY	BETAO	PHI	ALPHAW	BETA	CL	CD	CLM
14.536	-.449	.59930	7.89880	10.38610	-5.19730	.00000	9.70270	.02410	.71400	.13320	.06100
14.541	2.724	.59990	7.47220	10.37240	-5.19280	.00000	9.69910	.03500	.71880	.13440	.04940
14.551	7.181	.59920	6.86660	10.36200	-5.18910	.00000	9.69699	.02350	.73120	.13570	.01800
14.577	14.625	.60030	5.65320	10.35510	-5.18960	.00000	9.68780	.01980	.75030	.13800	-.01760
14.616	29.549	.59900	3.80340	10.35930	-5.19530	.00000	9.67940	.01950	.77980	.14190	-.05600
14.642	44.653	.60080	1.72210	10.36940	-5.20590	.00000	9.67220	.02160	.79990	.14500	-.08570
14.647	59.369	.59900	-.31530	10.37690	-5.21140	.00000	9.66720	.02260	.81390	.14740	-.07360
	GRADIENT	-.00013	-.13588	-.00233	.00083	.00000	-.00049	-.00258	.00278	.00029	-.00705

CA20 747/1 01 S1 CARRIER DATA (RGN115) (01 DEC 75)

REFERENCE DATA

SREF = 5500.0000 SQ.FT. XMRP = 1339.9000 IN.XC
LREF = 327.7800 IN. YMRP = .0000 IN.YC
BREF = 2348.0400 IN. ZMRP = 190.8000 IN.ZC
SCALE = .0300

PARAMETRIC DATA

ALPHAC =	4.000	BETAC =	5.000
ELV-IB =	.000	ELV-OB =	3.000
ELEVON =	5.000	MACH =	.600
BETAO =	-5.000	PHI =	.000
DX =	10.000	DY =	.000

RUN NO. 632/ 0 RN/L = 3.26 GRADIENT INTERVAL = .00/ 12.00

ALPHAO	DZ	MACH	DX	DY	BETAO	PHI	ALPHAW	BETA	CL	CD	CLM
10.326	-1.459	.59910	10.80660	-1.58800	-5.24760	.00000	5.82090	5.05090	.43050	.08830	-.02270
10.310	1.577	.59950	10.60980	-1.60360	-5.24590	.00000	5.82130	5.04970	.42990	.08910	-.01600
10.308	6.160	.60020	10.30360	-1.62150	-5.24000	.00000	5.81960	5.05130	.43450	.09100	-.01900
10.316	13.701	.60050	9.79660	-1.63320	-5.23490	.00000	5.81300	5.04780	.44570	.09310	-.02520
10.331	28.714	.60090	8.77550	-1.63810	-5.23590	.00000	5.80800	5.05230	.46490	.09450	-.03410
10.344	43.808	.60030	7.74110	-1.64140	-5.23430	.00000	5.80240	5.04990	.48100	.09470	-.04650
	GRADIENT	.00015	-.06682	-.00391	.00127	.00000	-.00037	.00035	.00100	.00041	-.00065

ORIGINAL PAGE IS
OF POOR QUALITY

CA20 747/1 01 S1 CARRIER DATA (RGN115) (01 DEC 75)

REFERENCE DATA

SREF = 5500.0000 SQ.FT. XMRP = 1339.9000 IN.XC
LREF = 327.7800 IN. YMRP = .0000 IN.YC
BREF = 2348.0400 IN. ZMRP = 190.8000 IN.ZC
SCALE = .0300

PARAMETRIC DATA

ALPHAC = 4.000 BETAC = 5.000
ELV-IB = .000 ELV-OB = 3.000
ELEVON = 5.000 MACH = .600
BETAO = -5.000 PHI = .000
DX = 10.000 DY = .000

RUN NO. 833/ 0 RN/L = 3.28 GRADIENT INTERVAL = .00/ 12.00

ALPHAO	DZ	MACH	DX	DY	BETAO	PHI	ALPHAH	BETA	CL	CD	CLH
14.703	.481	.59990	9.50420	-1.51150	-5.21160	.00000	5.83950	5.03250	.37440	.08030	.06418
14.674	3.583	.59940	9.30230	-1.49580	-5.21110	.00000	5.84040	5.03840	.37270	.08120	.07160
14.669	7.765	.60000	9.02180	-1.51040	-5.21030	.00000	5.84090	5.04940	.37730	.08380	.06960
14.666	15.725	.60050	8.48640	-1.51760	-5.20820	.00000	5.83410	5.04880	.39420	.08830	.04600
14.665	30.510	.59960	7.48080	-1.52620	-5.20760	.00000	5.82210	5.06330	.42570	.09210	.01110
14.670	45.572	.59900	6.45060	-1.52710	-5.20570	.00000	5.81350	5.04380	.45030	.09300	-.01340
14.674	60.497	.59950	5.42690	-1.53350	-5.20880	.00000	5.80710	5.05660	.46840	.09330	-.03160
	GRADIENT	.00002	-.06628	-.00005	.00018	.00000	.00019	.00234	.00044	.00049	.00069

CA20 747/1 01 S1 CARRIER DATA (RGN116) (01 DEC 75)

REFERENCE DATA

SREF = 5500.0000 SQ.FT. XMRP = 1339.9000 IN.XC
LREF = 327.7800 IN. YMRP = .0000 IN.YC
BREF = 2348.0400 IN. ZMRP = 190.8000 IN.ZC
SCALE = .0300

PARAMETRIC DATA

ALPHAC = 8.000 BETAC = 5.000
ELV-IB = .000 ELV-OB = 3.000
ELEVON = 5.000 MACH = .600
BETAO = -5.000 PHI = .000
DX = 10.000 DY = .000

RUN NO. 839/ 0 RN/L = 3.26 GRADIENT INTERVAL = .00/ 12.00

ALPHAO	DZ	MACH	DX	DY	BETAO	PHI	ALPHAH	BETA	CL	CD	CLH
10.294	-2.738	.59980	9.31160	-1.55500	-5.28470	.00000	9.65420	5.05110	.79470	.14360	-.14550
10.306	.352	.60000	8.90260	-1.59040	-5.27000	.00000	9.65590	5.04940	.79090	.14240	-.13120
10.320	3.098	.59990	8.53200	-1.61720	-5.25970	.00000	9.65370	5.05760	.79070	.14240	-.12510
10.367	12.333	.60060	7.27900	-1.64760	-5.24150	.00000	9.65120	5.04550	.78750	.14400	-.11980
10.428	27.414	.59940	5.21140	-1.66970	-5.23730	.00000	9.64660	5.06340	.81050	.14550	-.11140
10.473	42.599	.60060	3.11550	-1.66880	-5.23650	.00000	9.64210	5.05310	.82440	.14670	-.11200
	GRADIENT	-.00004	-.13496	-.00976	.00375	.00000	-.00080	.00299	-.00007	.00000	.00222

CA20 747/1 01 SI CARRIER DATA (RGN116) (01 DEC 75)

REFERENCE DATA

SREF = 5500.0000 SQ.FT. XMRP = 1339.9000 IN.XC
LREF = 327.7800 IN. YMRP = .0000 IN.YC
BREF = 2348.0400 IN. ZMRP = 190.8000 IN.ZC
SCALE = .0300

PARAMETRIC DATA

ALPHAC = 8.000 BETAC = 5.000
ELV-IB = .000 ELV-OB = 3.000
ELEVON = 5.000 MACH = .600
BETAO = -5.000 PHI = .000
DX = 10.000 DY = .000

RUN NO. 838/ 0 RN/L = 3.26 GRADIENT INTERVAL = .00/ 12.00

ALPHAO	DZ	MACH	DX	DY	BETAO	PHI	ALPHAW	BETA	CL	CD	CLM
14.539	-1.194	.59960	7.95930	-1.44850	-5.24490	.00000	9.67820	5.04490	.73020	.13060	-.04930
14.540	1.941	.59950	7.54570	-1.48380	-5.23400	.00000	9.67800	5.04450	.73080	.13110	-.05130
14.553	6.274	.59940	6.98660	-1.51170	-5.22180	.00000	9.67420	5.04780	.73450	.13280	-.05330
14.577	13.736	.59950	5.95710	-1.55280	-5.21120	.00000	9.67180	5.06930	.74600	.13580	-.06220
14.613	28.832	.59960	3.80080	-1.56200	-5.20960	.00000	9.66040	5.05950	.77080	.13990	-.07250
14.640	43.865	.60040	1.83390	-1.57120	-5.20720	.00000	9.65590	5.06190	.79140	.14180	-.08610
14.651	58.746	.60080	-.21820	-1.57450	-5.20980	.00000	9.64970	5.06760	.80940	.14370	-.09850
	GRADIENT	-.00002	-.13365	-.00644	.00282	.00000	-.00068	.00076	.00085	.00039	-.00046

CA20 747/1 01 SI CARRIER DATA (RGN117) (01 DEC 75)

REFERENCE DATA

SREF = 5500.0000 SQ.FT. XMRP = 1339.9000 IN.XC
LREF = 327.7800 IN. YMRP = .0000 IN.YC
BREF = 2348.0400 IN. ZMRP = 190.8000 IN.ZC
SCALE = .0300

PARAMETRIC DATA

ALPHAC = 4.000 BETAC = 5.000
ELV-IB = .000 ELV-OB = 3.000
ELEVON = 5.000 MACH = .600
BETAO = -5.000 PHI = .000
DX = .000 DY = 10.000

RUN NO. 845/ 0 RN/L = 3.29 GRADIENT INTERVAL = .00/ 12.00

ALPHAO	DZ	MACH	DX	DY	BETAO	PHI	ALPHAW	BETA	CL	CD	CLM
10.498	-.906	.60040	.78870	9.22240	-5.21280	.00000	5.84530	5.04420	.39620	.08930	.07070
10.467	2.237	.59980	.57730	9.23320	-5.22240	.00000	5.84150	5.04890	.40070	.09020	.06100
10.441	6.513	.59920	.28940	9.22990	-5.23010	.00000	5.84000	5.05350	.41180	.09100	.04550
10.439	14.233	.60090	-.23340	9.23800	-5.23900	.00000	5.82980	5.03800	.43280	.09300	.00780
10.446	29.130	.59990	-1.25300	9.24510	-5.24980	.00000	5.81930	5.03760	.45970	.09410	-.02800
10.455	44.219	.59980	-2.29460	9.25700	-5.25780	.00000	5.81540	5.03750	.47800	.09430	-.04600
	GRADIENT	-.00014	-.06732	-.00077	-.00180	.00000	-.00035	.00108	.00260	.00019	-.00362

CA20 747/1 01 S1 CARRIER DATA (RGN118) (01 DEC 75)

REFERENCE DATA

SREF = 5500.0000 SQ.FT. XMRP = 1339.8000 IN.XC
LREF = 327.7800 IN. YMRP = .0000 IN.YC
BREF = 2348.0400 IN. ZMRP = 190.8000 IN.ZC
SCALE = .0300

PARAMETRIC DATA

ALPHAC =	4.000	BETAC =	5.000
ELV-IB =	.000	ELV-OB =	3.000
ELEVON =	6.000	MACH =	.600
BETAO =	-5.000	PHI =	.000
DX =	10.000	DY =	10.000

RUN NO. 817/ 0 RN/L = 3.28 GRADIENT INTERVAL = .00/ 12.00

ALPHAO	DZ	MACH	DX	DY	BETAO	PHI	ALPHAH	BETA	CL	CD	CLM
10.387	-1.428	.60050	10.80850	8.27130	-5.19700	.00000	5.82810	5.08910	.42440	.08980	.04860
10.368	1.603	.59990	10.60430	8.27890	-5.20120	.00000	5.83120	5.07890	.42310	.09000	.04780
10.354	6.192	.59950	10.29750	8.27540	-5.20600	.00000	5.82650	5.09060	.43020	.09040	.03570
10.352	13.627	.60060	9.79330	8.28270	-5.21310	.00000	5.82320	5.08370	.44500	.09260	.00100
10.368	28.854	.60000	8.75340	8.29080	-5.22320	.00000	5.81190	5.08340	.46690	.09360	-.03240
10.375	43.802	.59950	7.72900	8.29670	-5.22860	.00000	5.80650	5.08390	.48380	.09400	-.04630
	GRADIENT	-.00007	-.06685	-.00076	-.00105	.00000	-.00102	.00255	.00155	.00009	-.00307

RUN NO. 822/ 0 RN/L = 3.25 GRADIENT INTERVAL = .00/ 12.00

ALPHAO	DZ	MACH	DX	DY	BETAO	PHI	ALPHAH	BETA	CL	CD	CLM
14.717	1.674	.59970	9.42000	8.37420	-5.17810	.00000	5.85110	5.08930	.35640	.07570	.18650
14.698	4.769	.59960	9.22800	8.37710	-5.17840	.00000	5.85190	5.09400	.35540	.07850	.18250
14.674	9.382	.59990	8.91570	8.38120	-5.18320	.00000	5.84940	5.09720	.36930	.08280	.14470
14.665	16.975	.59990	8.40160	8.38660	-5.18790	.00000	5.83980	5.08990	.39420	.08690	.08280
14.668	31.950	.59900	7.37290	8.39530	-5.19670	.00000	5.83260	5.09040	.43150	.09070	.01450
14.673	46.749	.60020	6.36880	8.40610	-5.20180	.00000	5.81470	5.08240	.45540	.09200	-.01580
14.668	61.783	.60020	5.33720	8.41540	-5.20920	.00000	5.80610	5.09090	.47220	.09300	-.03460
	GRADIENT	.00003	-.06721	.00093	-.00069	.00000	-.00026	.00102	.00184	.00094	-.00581

DATE 01 DEC 75 TABULATED SOURCE DATA - CA20

CA20 747/1 01 S1 CARRIER DATA (RGN1193 (01 DEC 75)

REFERENCE DATA

SREF =	5580.0000 SQ.FT.	XMRP =	1339.9000 IN.XC
LREF =	327.7800 IN.	YMRP =	.0000 IN.YC
BREF =	2348.0400 IN.	ZMRP =	190.8000 IN.ZC
SCALE =	.0300		

PARAMETRIC DATA

ALPHAC =	8.000	BETAC =	5.000
ELV-IB =	.000	ELV-OB =	3.000
ELEVON =	5.000	MACH =	.900
GETAO =	-5.000	PHI =	.000
DX =	10.000	DY =	10.000

RUN NO. 826/ 0 RN/L = 3.24 GRADIENT INTERVAL = .00/ 12.00

ALPHAO	DZ	MACH	DX	DY	BETAO	PHI	ALPHAW	BETA	CL	CD	CLM
10.232	-3.159	.59960	9.45520	8.21690	-5.17850	.00000	9.67640	5.11290	.78960	.14570	-.10490
10.221	-.170	.59930	9.04460	8.24760	-5.18470	.00000	9.67420	5.10090	.79090	.14430	-.09870
10.228	4.274	.60060	8.43850	8.25130	-5.20440	.00000	9.67370	5.10550	.79300	.14380	-.09990
10.086	8.078	.60080	8.00330	8.24320	-5.21030	.00000	9.67500	5.10510	.79570	.14390	-.09990
10.093	10.921	.60030	7.61260	8.24420	-5.21170	.00000	9.67450	5.09750	.79590	.14410	-.10350
10.159	26.257	.59990	5.50150	8.24330	-5.22100	.00000	9.66580	5.09620	.81240	.14520	-.11310
10.305	41.630	.59930	3.31110	8.25650	-5.22650	.00000	9.66440	5.09590	.82590	.14700	-.11400
	GRADIENT	-.00004	-.12370	-.00113	-.00112	.00000	.00013	-.00114	.00059	.00004	-.00051

RUN NO. 825/ 0 RN/L = 3.22 GRADIENT INTERVAL = .00/ 12.00

ALPHAO	DZ	MACH	DX	DY	BETAO	PHI	ALPHAW	BETA	CL	CD	CLM
14.586	-.647	.59910	7.90360	8.36830	-5.17870	.00000	9.69920	5.10990	.72830	.12990	.01900
14.574	2.288	.59900	7.59930	8.38730	-5.18080	.00000	9.69640	5.09310	.73070	.13040	.00900
14.572	6.696	.60040	6.68610	8.37830	-5.18510	.00000	9.69580	5.10230	.73910	.13230	-.01390
14.589	14.523	.59960	5.84870	8.36390	-5.18580	.00000	9.69090	5.10280	.76200	.13470	-.04060
14.622	29.445	.59990	3.88460	8.35910	-5.19440	.00000	9.68180	5.09570	.77700	.13850	-.07460
14.641	44.416	.59990	1.74040	8.36180	-5.20120	.00000	9.67480	5.10310	.79690	.14150	-.09830
14.651	59.262	.60020	-.31430	8.37110	-5.20690	.00000	9.66940	5.10360	.81210	.14390	-.09970
	GRADIENT	.00030	-.13524	-.00239	-.00093	.00000	-.00013	.00265	.00182	.00041	-.00497

ORIGINAL PAGE IS
OF POOR QUALITY

CA20 747/1 01 S1 CARRIER DATA (RGN120) (01 DEC 75)

REFERENCE DATA

SREF =	5500.0000 SQ.FT.	XMRP =	1339.9000 IN.XC		
LREF =	327.7800 IN.	YMRP =	.0000 IN.YC		
BREF =	2348.0400 IN.	ZMRP =	190.8000 IN.ZC		
SCALE =	.0300				

PARAMETRIC DATA

ALPHAC =	4.000	BETAC =	-5.000
ELV-IB =	.000	ELV-OB =	.000
ELEVON =	5.000	MACH =	.600
BETAO =	-5.000	PHI =	.000
DX =	.000	DY =	10.000

RUN NO. 765/ 0 RN/L = 3.26 GRADIENT INTERVAL = .00/ 12.00

ALPHAO	DZ	MACH	DX	DY	BETAO	PHI	ALPHAH	BETA	CL	CD	CLM
10.515	-1.996	.60080	.84350	11.45910	-5.24180	.00000	5.87130	-4.98110	.37780	.08900	.05580
10.489	1.101	.59950	.64030	11.44630	-5.23360	.00000	5.86780	-4.98020	.38140	.08950	.06040
10.487	5.844	.60040	.31530	11.45310	-5.23550	.00000	5.86370	-4.98810	.39300	.09040	.05740
10.491	13.003	.59970	-.17740	11.46190	-5.23990	.00000	5.85710	-4.99220	.41180	.09210	.04160
10.505	28.256	.60020	-1.23080	11.48620	-5.25290	.00000	5.84900	-4.99070	.44110	.09320	.02220
10.512	43.053	.60090	-2.24980	11.50370	-5.26170	.00000	5.83960	-4.99000	.46060	.09350	.00850
10.515	46.935	.59980	-2.51800	11.50680	-5.26380	.00000	5.83580	-4.98180	.46460	.09330	.00580
	GRADIENT	.00019	-.06851	.00143	-.00040	.00000	-.00086	-.00167	.00245	.00019	-.00063

RUN NO. 768/ 0 RN/L = 3.24 GRADIENT INTERVAL = .00/ 12.00

ALPHAO	DZ	MACH	DX	DY	BETAO	PHI	ALPHAH	BETA	CL	CD	CLM
14.817	.070	.60020	-.31490	11.36860	-5.21580	.00000	5.90170	-4.98100	.30630	.07990	.14400
14.790	3.179	.60040	-.52360	11.37120	-5.20890	.00000	5.89430	-4.97990	.31450	.08190	.13740
14.781	7.513	.60080	-.82800	11.39430	-5.21010	.00000	5.89240	-4.98870	.32700	.08440	.13620
14.780	9.056	.60090	-.93650	11.38410	-5.21080	.00000	5.89280	-4.99120	.33240	.08520	.12860
14.776	15.044	.59940	-1.35410	11.39230	-5.21500	.00000	5.89410	-4.99340	.35660	.08800	.10210
14.778	30.013	.59960	-2.39160	11.42080	-5.22890	.00000	5.88850	-4.99850	.40150	.09180	.05700
14.777	44.971	.60010	-3.42780	11.43380	-5.23760	.00000	5.85800	-4.98540	.42960	.09270	.03320
14.777	60.036	.60070	-4.47510	11.45160	-5.24820	.00000	5.85010	-4.98230	.45020	.09280	.01600
	GRADIENT	.00008	-.06931	.00197	.00045	.00000	-.00094	-.00045	.00289	.00059	-.00142

DATE 01 DEC 75 TABULATED SOURCE DATA - CA20

CA20 747/1 01 S1 CARRIER DATA (RGN121) (01 DEC 75)

REFERENCE DATA

SREF =	5500.0000 SQ.FT.	XMRP =	1339.9000 IN.XC		
LREF =	327.7800 IN.	YMRP =	.0000 IN.YC		
BREF =	2348.0400 IN.	ZMRP =	190.6000 IN.ZC		
SCALE =	.0300				

PARAMETRIC DATA

ALPHAC =	8.000	BETAC =	-5.000
ELV-IB =	.000	ELV-OB =	.000
ELEVON =	5.000	MACH =	.600
BETAO =	-5.000	PHI =	.000
DX =	.000	DY =	10.000

RUN NO. 766/ 0 RN/L = 3.25 GRADIENT INTERVAL = .00/ 12.00

ALPHAO	DZ	MACH	DX	DY	BETAO	PHI	ALPHAW	BETA	CL	CD	CLM
10.296	-3.648	.60030	-.59030	11.55550	-5.26430	.00000	9.75040	-4.98270	.78040	.14160	-.05420
10.312	-.567	.60080	-.99740	11.51870	-5.24420	.00000	9.74600	-4.98380	.75980	.14010	-.05660
10.352	4.042	.60030	-1.63330	11.50050	-5.23340	.00000	9.74400	-4.98900	.76560	.13950	-.05490
10.389	11.503	.60030	-2.66550	11.49930	-5.23310	.00000	9.73980	-4.99020	.77770	.14040	-.05510
10.447	28.786	.59940	-4.78130	11.52080	-5.24770	.00000	9.73480	-4.99150	.79870	.14190	-.05770
10.474	41.500	.60020	-6.83220	11.53820	-5.25820	.00000	9.72930	-4.97300	.81440	.14310	-.05620
10.480	46.724	.59970	-7.56360	11.54730	-5.26270	.00000	9.72760	-4.98040	.81930	.14360	-.05890
	GRADIENT	.00000	-.13828	-.00016	.00004	.00000	-.00055	-.00016	.00162	.00012	-.00004

RUN NO. 767/ 0 RN/L = 3.24 GRADIENT INTERVAL = .00/ 12.00

ALPHAO	DZ	MACH	DX	DY	BETAO	PHI	ALPHAW	BETA	CL	CD	CLM
14.680	-1.559	.60050	-1.92420	11.43940	-5.22370	.00000	9.78050	-4.97870	.66800	.12570	.02550
14.680	1.597	.60010	-2.35280	11.42690	-5.20980	.00000	9.77830	-4.98750	.67500	.12650	.03080
14.688	5.926	.59990	-2.94660	11.41730	-5.20470	.00000	9.77280	-4.98780	.69040	.12830	.01670
14.707	13.492	.60040	-3.98700	11.41840	-5.20750	.00000	9.75940	-4.98580	.71660	.13160	-.00970
14.735	28.283	.59950	-6.03700	11.44460	-5.22150	.00000	9.74920	-4.98790	.75270	.13580	-.02540
14.751	43.438	.59930	-8.14780	11.46360	-5.23100	.00000	9.74110	-4.98370	.78130	.13870	-.03970
14.755	58.164	.60040	-10.20510	11.48640	-5.24360	.00000	9.73190	-4.98680	.80060	.14050	-.04690
	GRADIENT	-.00005	-.13716	-.00222	.00118	.00000	-.00125	-.00007	.00356	.00042	-.00326

CA20 747/1 01 S1 CARRIER DATA (RGN122) (01 DEC 75)

REFERENCE DATA

SREF = 5500.0000 SQ.FT. XMRP = 1339.9000 IN.XC
LREF = 327.7800 IN. YMRP = .0000 IN.YC
BREF = 2348.0400 IN. ZMRP = 190.8000 IN.ZC
SCALE = .0300

PARAMETRIC DATA

ALPHAC = 4.000 BETAC = .000
ELV-IB = .000 ELV-OB = .000
ELEVON = 5.000 MACH = .600
BETAO = -5.000 PHI = .000
DX = .000 DY = 10.000

RUN NO. 761/ 0 RN/L = 3.32 GRADIENT INTERVAL = .00/ 12.00

ALPHAO	DZ	MACH	DX	DY	BETAO	PHI	ALPHAW	BETA	CL	CD	CLM
10.533	-1.760	.60020	.83720	10.39810	-5.23790	.00000	5.87650	-.00910	.36260	.09130	.14460
10.518	1.242	.60000	.63340	10.40180	-5.23580	.00000	5.87280	-.0112	.37300	.09300	.12300
10.511	5.718	.60020	.32880	10.40050	-5.23670	.00000	5.86530	-.01460	.38780	.09460	.10180
10.517	13.048	.59950	-.17620	10.40330	-5.24020	.00000	5.85710	-.01870	.41080	.09600	.06720
10.529	28.455	.60000	-1.23960	10.41620	-5.25120	.00000	5.84810	-.01200	.44170	.09780	.02990
10.535	43.071	.60080	-2.24820	10.43250	-5.26010	.00000	5.84030	-.01840	.46280	.09830	.01100
10.533	47.085	.60070	-2.52230	10.43510	-5.26270	.00000	5.83630	-.01030	.46740	.09860	.00690
	GRADIENT	.00004	-.06805	-.00029	-.00020	.00000	-.00168	-.00076	.00331	.00036	-.00474

RUN NO. 764/ 0 RN/L = 3.26 GRADIENT INTERVAL = .00/ 12.00

ALPHAO	DZ	MACH	DX	DY	BETAO	PHI	ALPHAW	BETA	CL	CD	CLM
14.817	.178	.60040	-.29330	10.38910	-5.21580	.00000	5.90850	-.00220	.27600	.07970	.29080
14.797	3.067	.60070	-.49760	10.40960	-5.21220	.00000	5.90420	-.01100	.29340	.08210	.23810
14.787	7.581	.59930	-.81630	10.41730	-5.21290	.00000	5.89670	-.01520	.31460	.08500	.20270
14.780	15.133	.59990	-1.34110	10.42580	-5.21580	.00000	5.88060	-.01750	.35240	.08970	.13830
14.773	29.995	.59930	-2.37300	10.44100	-5.22670	.00000	5.86560	-.01800	.40120	.09420	.06720
14.775	45.089	.60000	-3.41890	10.45180	-5.23340	.00000	5.85390	-.01260	.43200	.09640	.03760
14.771	60.069	.60020	-4.45690	10.47380	-5.24560	.00000	5.84420	-.01110	.45200	.09720	.02060
	GRADIENT	-.00016	-.07063	.00362	.00034	.00000	-.00160	-.00168	.00517	.00071	-.01031

CA20 747/1 01 S1 CARRIER DATA (RGH123) (01 DEC 75)

REFERENCE DATA

SREF =	5500.0000 SQ.FT.	XMRP =	1339.5000 IN.XC
LREF =	327.7800 IN.	YMRP =	.0000 IN.YC
BREF =	2348.0400 IN.	ZMRP =	190.8000 IN.ZC
SCALE =	.0300		

PARAMETRIC DATA

ALPHAC =	8.000	BETAC =	.000
ELV-IB =	.000	ELV-OB =	.000
ELEVON =	5.000	MACH =	.600
BETAO =	-5.000	PHI =	.000
DX =	.000	DY =	10.000

RUN NO. 762/ 0 RN/L = 3.28 GRADIENT INTERVAL = .00/ 12.00

ALPHAO	DZ	MACH	DX	DY	BETAO	PHI	ALPHAW	BETA	CL	CD	CLM
10.341	-3.606	.60010	-.58510	10.45990	-5.25020	.00000	9.74490	-.00690	.76030	.14520	-.01250
10.346	-.403	.59990	-1.02000	10.44290	-5.24670	.00000	9.74600	-.01040	.75900	.14480	-.00860
10.375	6.542	.60010	-1.83100	10.41910	-5.23590	.00000	9.74280	-.01460	.76780	.14420	-.01990
10.411	11.472	.60010	-2.65140	10.41120	-5.23970	.00000	9.73990	-.01770	.77650	.14450	-.03930
10.469	26.651	.59920	-4.75740	10.41420	-5.24700	.00000	9.73260	-.00680	.79710	.14670	-.03720
10.496	41.561	.59930	-6.83220	10.42860	-5.25710	.00000	9.72730	-.00810	.81230	.14890	-.02340
10.503	46.645	.60020	-7.55930	10.43080	-5.25900	.00000	9.72590	-.00790	.81680	.14970	-.04000
	GRADIENT	.00000	-.13835	-.00133	.00020	.00000	-.00049	-.00052	.00147	.00005	-.00159

RUN NO. 763/ 0 RN/L = 3.26 GRADIENT INTERVAL = .00/ 12.00

ALPHAO	DZ	MACH	DX	DY	BETAO	PHI	ALPHAW	BETA	CL	CD	CLM
14.699	-1.516	.60089	-1.91500	10.45900	-5.22780	.00000	9.77730	-.00670	.66970	.12790	.09870
14.691	2.914	.60020	-2.51930	10.44440	-5.21870	.00000	9.77300	-.01230	.68260	.12980	.06980
14.699	7.487	.59990	-3.14690	10.42990	-5.21400	.00000	9.76670	-.00730	.70020	.13180	.04300
14.711	13.631	.59930	-3.93010	10.41690	-5.21290	.00000	9.75730	-.01900	.72070	.13390	.01430
14.742	28.443	.59990	-6.03760	10.42940	-5.22190	.00000	9.74450	-.02910	.75730	.13900	-.01910
14.754	43.346	.60010	-8.11400	10.44480	-5.22970	.00000	9.73780	-.01780	.78210	.14270	-.02820
14.753	58.323	.60020	-10.20620	10.46770	-5.24130	.00000	9.72950	-.00890	.79950	.14610	-.03410
	GRADIENT	-.00009	-.13722	-.00332	.00103	.00000	-.00139	.00109	.00395	.00044	-.00596

ORIGINAL PAGE IS
OF POOR QUALITY

DATE 01 DEC 75 TABULATED SOURCE DATA - CA20

CA20 747/1 01 S1 CARRIER DATA (RGN124) (01 DEC 75)

REFERENCE DATA

SREF = 5500.0000 SQ.FT. XMRP = 1339.9000 IN.XC
LREF = 327.7800 IN. YMRP = .0000 IN.YC
BREF = 2348.0400 IN. ZMRP = 190.8000 IN.ZC
SCALE = .0300

PARAMETRIC DATA

ALPHAC =	4.000	BETAC =	5.000
ELV-IB =	.000	ELV-OB =	.000
ELEVON =	5.000	MACH =	.600
BETAO =	-5.000	PHI =	.000
DX =	.000	DY =	10.000

RUN NO. 769/ 0 RN/L = 3.24 GRADIENT INTERVAL = .00/ 12.00

ALPHAO	DZ	MACH	DX	DY	BETAO	PHI	ALPHAW	BETA	CL	CD	CLM
10.561	-1.968	.60050	.84330	9.22610	-5.20960	.00000	5.87540	5.00580	.38430	.08690	.12030
10.533	1.261	.60040	.62320	9.23700	-5.21650	.00000	5.87370	5.00280	.38960	.08810	.10770
10.511	5.843	.60050	.31090	9.24170	-5.22710	.00000	5.87190	4.98430	.40110	.08930	.08830
10.506	13.217	.60020	-.19490	9.24420	-5.23460	.00000	5.86400	4.98420	.42210	.09140	.05060
10.514	28.279	.59950	-1.23590	9.25270	-5.24690	.00000	5.85360	4.99140	.45030	.09270	.01380
10.514	42.986	.59930	-2.25500	9.26120	-5.25480	.00000	5.84920	4.99910	.46830	.09270	-.00290
10.518	46.942	.59980	-2.52760	9.26360	-5.25640	.00000	5.84540	4.99920	.47270	.09290	-.00500
	GRADIENT	.00002	-.06816	.00103	-.00188	.00000	-.00039	-.00404	.00251	.00026	-.00423

RUN NO. 772/ 0 RN/L = 3.23 GRADIENT INTERVAL = .00/ 12.00

ALPHAO	DZ	MACH	DX	DY	BETAO	PHI	ALPHAW	BETA	CL	CD	CLM
14.954	.809	.60000	-.36940	9.30510	-5.19510	.00000	5.90150	4.99800	.30060	.07570	.23800
14.915	4.128	.59920	-.59930	9.32970	-5.20000	.00000	5.89450	4.99270	.31400	.07730	.20480
14.859	10.992	.60080	-1.07290	9.34180	-5.20770	.00000	5.88800	4.99680	.33910	.08270	.16560
14.877	18.691	.60050	-1.60570	9.35210	-5.21430	.00000	5.87640	4.99090	.36980	.08720	.11210
14.871	33.530	.60040	-2.63000	9.36710	-5.22520	.00000	5.85860	4.98910	.41200	.09030	.05030
14.867	48.582	.60010	-3.67260	9.37470	-5.23120	.00000	5.84820	4.98940	.44020	.09140	.01980
14.860	63.797	.59940	-4.73190	9.39310	-5.24340	.00000	5.84160	4.99940	.45810	.09210	.00440
	GRADIENT	.00010	-.06907	.00333	-.00122	.00000	-.00127	-.00001	.00376	.00070	-.00690

CA20 747/1 01 S1 CARRIER DATA (RSN125) (01 DEC 75)

REFERENCE DATA

SREF = 5500.0000 SQ.FT. XMRP = 1339.8000 IN.XC
LREF = 327.7800 IN. YMRP = .0000 IN.YC
BREF = 2348.0400 IN. ZMRP = 190.8000 IN.ZC
SCALE = .0300

PARAMETRIC DATA

ALPHAC = 8.000 BETAC = 5.000
ELV-IB = .000 ELV-OB = .000
ELEVON = 5.000 MACH = .600
BETAO = -5.000 PHI = .000
DX = .000 DY = 10.000

RUN NO. 770/ 0 RN/L = 3.23 GRADIENT INTERVAL = .00/ 12.00

ALPHAO	DZ	MACH	DX	DY	BETAO	PHI	ALPHAW	BETA	CL	CD	CLM
10.389	-3.483	.59990	-.59100	9.16540	-5.19210	.00000	9.73870	5.00480	.76870	.14240	-.05540
10.384	-.364	.60040	-1.01940	9.20850	-5.21240	.00000	9.73710	5.00040	.76850	.14200	-.04980
10.376	4.046	.59830	-1.62970	9.20920	-5.22650	.00000	9.73610	5.00530	.77200	.14180	-.04970
10.412	11.707	.59830	-2.69850	9.21350	-5.23110	.00000	9.73290	4.99850	.78100	.14240	-.05720
10.454	26.499	.59950	-4.73520	9.21390	-5.24260	.00000	9.72830	4.99510	.80040	.14480	-.07030
10.479	41.497	.59910	-6.81820	9.22210	-5.25140	.00000	9.72080	4.99590	.81550	.14590	-.07230
10.486	46.758	.59950	-7.55090	9.22410	-5.25460	.00000	9.71940	5.00350	.81540	.14640	-.07260
	GRADIENT	.00000	-.13820	.00056	-.00112	.00000	-.00042	-.00219	.00117	.00009	-.00163

RUN NO. 771/ 0 RN/L = 3.23 GRADIENT INTERVAL = .00/ 12.00

ALPHAO	DZ	MACH	DX	DY	BETAO	PHI	ALPHAW	BETA	CL	CD	CLM
14.823	-.684	.59950	-2.03280	9.33230	-5.19580	.00000	9.76760	5.01150	.68810	.12450	.04950
14.797	1.956	.60050	-2.41590	9.34470	-5.20380	.00000	9.76340	4.99810	.69500	.12500	.04550
14.791	6.399	.59990	-3.02280	9.33420	-5.20750	.00000	9.75690	4.99440	.70830	.12780	.02010
14.798	14.059	.60070	-4.07020	9.31690	-5.21020	.00000	9.74920	5.00170	.72880	.13140	-.01230
14.819	28.947	.59990	-6.12930	9.31700	-5.21810	.00000	9.74410	4.99360	.75580	.13680	-.04060
14.842	43.761	.60020	-8.18550	9.32610	-5.22580	.00000	9.73320	5.00170	.78040	.14030	-.05600
14.847	59.029	.59990	-10.31650	9.34040	-5.23500	.00000	9.72670	5.00260	.79900	.14340	-.06400
	GRADIENT	-.00014	-.13657	-.00236	-.00083	.00000	-.00101	-.00093	.00289	.00063	-.00572

ORIGINAL PAGE IS POOR QUALITY

CA20 747/1 02 S1 CARRIER DATA (RGN126) (01 DEC 75)

REFERENCE DATA

SREF = 5500.0000 SQ.FT. XMRP = 1339.9000 IN.XC
LREF = 327.7800 IN. YMRP = .0000 IN.YC
BREF = 2348.0400 IN. ZMRP = 190.8000 IN.ZC
SCALE = .0300

PARAMETRIC DATA

ALPHAC =	4.000	BETAC =	-5.000
ELV-IB =	.000	ELV-OB =	3.000
ELEVON =	5.000	MACH =	.600
BETAO =	.000	PHI =	.000
DX =	.000	DY =	.000

RUN NO. 656/ 0 RN/L = 3.29 GRADIENT INTERVAL = -1.00/ 4.00

ALPHAO	DZ	MACH	DX	DY	BETAO	PHI	ALPHAH	BETA	CL	CD	CLM
10.466	-1.096	.60040	10.78960	1.93190	.02640	.00000	5.87110	-4.99100	.37880	.08700	.05490
10.459	2.127	.59920	10.56940	1.94420	.01790	.00000	5.87110	-4.97980	.38450	.08780	.05110
10.459	6.620	.60000	10.26250	1.96080	.01060	.00000	5.86390	-4.98600	.39760	.09010	.03080
10.464	14.115	.59980	9.74740	1.97410	.00250	.00000	5.85590	-4.97810	.41920	.09230	.00140
10.475	29.115	.59940	8.71410	1.99380	-.00580	.00000	5.84630	-4.98080	.44900	.09450	-.02500
10.481	44.160	.59950	7.67070	2.00190	-.00610	.00000	5.84030	-4.98800	.46930	.09480	-.03670
10.485	48.200	.59920	7.39520	2.00180	-.00610	.00000	5.83410	-4.99750	.47340	.09470	-.04030
	GRADIENT	.00000	.00000	.00000	.00000	.00000	.00000	.00000	.00000	.00000	.00000

CA20 747/1 02 S1 CARRIER DATA (RGN127) (01 DEC 75)

REFERENCE DATA

SREF = 5500.0000 SQ.FT. XMRP = 1339.9000 IN.XC
LREF = 327.7800 IN. YMRP = .0000 IN.YC
BREF = 2348.0400 IN. ZMRP = 190.8000 IN.ZC
SCALE = .0300

PARAMETRIC DATA

ALPHAC =	4.000	BETAC =	-5.000
ELV-IB =	.000	ELV-OB =	3.000
ELEVON =	5.000	MACH =	.600
BETAO =	.000	PHI =	.000
DX =	10.000	DY =	.000

RUN NO. 657/ 0 RN/L = 3.34 GRADIENT INTERVAL = -1.00/ 4.00

ALPHAO	DZ	MACH	DX	DY	BETAO	PHI	ALPHAH	BETA	CL	CD	CLM
10.433	-1.292	.59920	10.78030	1.92340	.02690	.00000	5.86290	-4.96760	.40190	.08710	.04950
10.431	1.807	.59920	10.57160	1.93720	.01910	.00000	5.86170	-4.96380	.40440	.08770	.04690
10.433	6.229	.60080	10.27160	1.94970	.01210	.00000	5.85780	-4.96200	.41440	.08960	.02600
10.444	14.070	.60000	9.73470	1.96260	.00440	.00000	5.85180	-4.95390	.43060	.09180	.00060
10.465	28.827	.59930	8.71920	1.97980	-.00320	.00000	5.84330	-4.95700	.45460	.09420	-.02440
10.477	43.949	.59940	7.67520	1.99260	-.00450	.00000	5.83720	-4.97220	.47130	.09450	-.03650
10.478	48.212	.59980	7.38180	1.99180	-.00550	.00000	5.83600	-4.96410	.47470	.09470	-.04030
	GRADIENT	.00000	.00000	.00000	.00000	.00000	.00000	.00000	.00000	.00000	.00000

DATE 01 DEC 75 TABULATED SOURCE DATA - CA20

CA20 747/1 02 S1 CARRIER DATA (RGN128) (01 DEC 75)

REFERENCE DATA

SREF = 5500.0000 SQ.FT. XMRP = 1339.9000 IN.XC
LREF = 327.7800 IN. YMRP = .0000 IN.YC
BREF = 2348.0400 IN. ZMRP = 190.8000 IN.ZC
SCALE = .0300

PARAMETRIC DATA

ALPHAC =	4.000	BETAC =	-5.000
ELV-IB =	.000	ELV-OB =	3.000
ELEVON =	5.000	MACH =	.600
BETAO =	.000	PHI =	.000
DX =	20.000	DY =	.000

RUN NO. 669/ 0 RN/L = 3.32 GRADIENT INTERVAL = -1.00/ 4.00

ALPHAO	DZ	MACH	DX	DY	BETAO	PHI	ALPHAW	BETA	CL	CD	CLM
10.338	-1.706	.60020	20.78390	2.80120	.02290	.00000	5.84610	-4.97720	.42300	.08930	.02330
10.333	1.490	.59930	20.57030	2.80850	.01820	.00000	5.84520	-4.98530	.42460	.08960	.02780
10.348	5.895	.59930	20.28620	2.82240	.00970	.00000	5.84260	-4.99280	.43080	.08950	.01320
10.360	13.450	.59940	19.75050	2.84000	.00250	.00000	5.83790	-4.97010	.44350	.09120	-.00630
10.383	28.424	.60060	18.72420	2.84590	-.00400	.00000	5.83120	-4.95760	.46260	.09370	-.02780
10.386	43.434	.59980	17.69220	2.86070	-.00470	.00000	5.82290	-4.97340	.47670	.09420	-.03900
10.401	48.251	.60010	17.35740	2.86070	-.00700	.00000	5.82450	-4.98530	.48120	.09430	-.04160
	GRADIENT	.00000	.00000	.00000	.00000	.00000	.00000	.00000	.00000	.00000	.00000

CA20 747/1 02 S1 CARRIER DATA (RGN129) (01 DEC 75)

REFERENCE DATA

SREF = 5500.0000 SQ.FT. XMRP = 1339.9000 IN.XC
LREF = 327.7800 IN. YMRP = .0000 IN.YC
BREF = 2348.0400 IN. ZMRP = 190.8000 IN.ZC
SCALE = .0300

PARAMETRIC DATA

ALPHAC =	4.000	BETAC =	.000
ELV-IB =	.000	ELV-OB =	3.000
ELEVON =	5.000	MACH =	.600
BETAO =	.000	PHI =	.000
DX =	.000	DY =	.000

RUN NO. 692/ 0 RN/L = 3.31 GRADIENT INTERVAL = -1.00/ 4.00

ALPHAO	DZ	MACH	DX	DY	BETAO	PHI	ALPHAW	BETA	CL	CD	CLM
10.500	-.437	.60030	.77380	-.01930	.00560	.00000	5.87480	.04740	.37240	.09270	.08110
10.491	2.659	.59970	.56060	-.01970	.00460	.00000	5.87310	.05460	.37770	.09400	.08350
10.491	7.176	.60030	.25130	-.01380	.00350	.00000	5.86550	.03860	.38580	.09570	.05540
10.495	14.694	.59940	-.26210	-.01610	.00270	.00000	5.85330	.05350	.41900	.09790	.01990
10.508	26.858	.59930	-1.10100	-.00610	-.00180	.00000	5.84700	.04480	.44690	.09930	-.01340
10.510	29.527	.59940	-1.28250	-.00180	-.00280	.00000	5.84330	.03710	.45270	.09940	-.01860
10.521	44.750	.59910	-2.33460	-.00040	-.00350	.00000	5.83550	.04500	.47410	.09970	-.03640
10.524	48.080	.60070	-2.56460	.00190	-.00470	.00000	5.83420	.04510	.47770	.10010	-.03900
	GRADIENT	-.00019	-.06987	-.00016	-.00026	.00000	-.00055	.00233	.00171	.00042	.00078

CA20 747/1 02 S1 CARRIER DATA (RGN129) (01 DEC 75)

REFERENCE DATA

SREF = 5500.0000 SQ.FT. XMRP = 1339.9000 IN.XC
LREF = 327.7800 IN. YMRP = .0000 IN.YC
BREF = 2348.0400 IN. ZMRP = 190.8000 IN.ZC
SCALE = .0300

PARAMETRIC DATA

ALPHAC = 4.000 BETAC = .000
ELV-IB = .000 ELV-OB = 3.000
ELEVON = 5.000 MACH = .600
BETAO = .000 PHI = .000
DX = .000 DY = .000

RUN NO. 653/ 0 RN/L = 3.29 GRADIENT INTERVAL = -1.00/ 4.00

ALPHAO	DZ	MACH	DX	DY	BETAO	PHI	ALPHAW	BETA	CL	CD	CLM
14.760	1.601	.60030	-.37590	-.00820	-.00010	.00000	5.90450	.03130	.28490	.08160	.19570
14.750	4.801	.60000	-.60190	-.00730	-.00160	.00000	5.89740	.04580	.29830	.08310	.18140
14.743	9.200	.59960	-.90970	-.00670	-.00130	.00000	5.89170	.04590	.32050	.08780	.15120
14.738	16.514	.59900	-1.41430	-.00350	-.00310	.00000	5.87580	.05400	.35720	.09280	.09300
14.739	31.538	.59910	-2.45150	.01100	-.00700	.00000	5.85960	.03740	.40780	.09660	.03030
14.741	46.575	.59980	-3.49840	.01400	-.00920	.00000	5.84790	.04480	.44010	.09840	-.00340
14.736	61.537	.59920	-4.52810	.02380	-.01480	.00000	5.84020	.04460	.46110	.09900	-.02520
	GRADIENT	.00000	.00000	.00000	.00000	.00000	.00000	.00000	.00000	.00000	.00000

CA20 747/1 02 S1 CARRIER DATA (RGN130) (01 DEC 75)

REFERENCE DATA

SREF = 5500.0000 SQ.FT. XMRP = 1339.9000 IN.XC
LREF = 327.7800 IN. YMRP = .0000 IN.YC
BREF = 2348.0400 IN. ZMRP = 190.8000 IN.ZC
SCALE = .0300

PARAMETRIC DATA

ALPHAC = 4.000 BETAC = .000
ELV-IB = .000 ELV-OB = 3.000
ELEVON = 5.000 MACH = .600
BETAO = .000 PHI = .000
DX = 10.000 DY = .000

RUN NO. 661/ 0 RN/L = 3.30 GRADIENT INTERVAL = -1.00/ 4.00

ALPHAO	DZ	MACH	DX	DY	BETAO	PHI	ALPHAW	BETA	CL	CD	CLM
10.416	-1.295	.59950	10.81230	-.00590	.00540	.00000	5.86600	.00120	.39690	.09170	.07700
10.413	1.696	.59980	10.60770	-.00370	.00510	.00000	5.86550	.00080	.39890	.09330	.08070
10.418	6.294	.59950	10.29140	-.00080	.00360	.00000	5.86130	.00010	.41040	.09510	.05760
10.427	13.796	.59900	9.77720	-.00180	.00220	.00000	5.85460	.00730	.42830	.09720	.02280
10.446	28.832	.59940	8.74480	.00990	-.00260	.00000	5.84380	-.00150	.45770	.09860	-.01600
10.459	43.896	.59950	7.71030	.00770	-.00200	.00000	5.83270	.00640	.47530	.09920	-.03390
10.460	48.115	.59900	7.4.169	.01090	-.00390	.00000	5.83590	.00630	.47920	.09940	-.03810
	GRADIENT	.00000	.00000	.00000	.00000	.00000	.00000	.00000	.00000	.00000	.00000

CA20 747/1 02 SI CARRIER DATA (RGN130) (01 DEC 75)

REFERENCE DATA

SREF =	5500.0000 SQ.FT.	XMRP =	1339.9000 IN.XC		
LREF =	327.7800 IN.	YMRP =	.0000 IN.YC		
BREF =	2348.0400 IN.	ZMRP =	190.8000 IN.ZC		
SCALE =	.0300				

PARAMETRIC DATA

ALPHAC =	4.000	BETAC =	.000
ELV-IB =	.000	ELV-OB =	3.000
ELEVON =	5.000	MACH =	.600
BETAG =	.000	PHI =	.000
DX =	10.000	DY =	.000

RUN NO. 659/ 0 RN/L = 3.31 GRADIENT INTERVAL = -1.00/ 4.00

ALPHAO	DZ	MACH	DX	DY	BETAO	PHI	ALPHAW	BETA	CL	CD	CLM
14.654	1.473	.59920	9.49420	.00240	-.00220	.00000	5.69550	-.01400	.32140	.00030	.22310
14.652	4.559	.59970	9.28000	-.00770	-.00200	.00000	5.69360	.00760	.32920	.00340	.21250
14.654	9.090	.60080	8.97090	-.00540	-.00190	.00000	5.69430	-.00040	.34880	.00710	.16720
14.654	16.527	.59930	8.45720	-.00110	-.00280	.00000	5.87540	-.00060	.37820	.00100	.10170
14.662	31.535	.59920	7.42330	.01230	-.00790	.00000	5.86060	.00350	.41820	.00600	.03520
14.659	46.582	.60060	6.39510	.01620	-.00730	.00000	5.63040	-.00160	.44630	.00760	.00100
14.656	61.600	.59930	5.35300	.02020	-.01170	.00000	5.64130	.00830	.46460	.00930	-.01960
	GRADIENT	.00000	.00000	.00000	.00000	.00000	.00000	.00000	.00000	.00000	.00000

CA20 747/1 02 SI CARRIER DATA (RGN131) (01 DEC 75)

REFERENCE DATA

SREF =	5500.0000 SQ.FT.	XMRP =	1339.9000 IN.XC		
LREF =	327.7800 IN.	YMRP =	.0000 IN.YC		
BREF =	2340.0400 IN.	ZMRP =	190.8000 IN.ZC		
SCALE =	.0300				

PARAMETRIC DATA

ALPHAC =	4.000	BETAC =	.000
ELV-IB =	.000	ELV-OB =	3.000
ELEVON =	5.000	MACH =	.600
BETAG =	.000	PHI =	.000
DX =	20.000	DY =	.000

RUN NO. 665/ 0 RN/L = 3.29 GRADIENT INTERVAL = -1.00/ 4.00

ALPHAO	DZ	MACH	DX	DY	BETAG	PHI	ALPHAW	BETA	CL	CD	CLM
10.344	-1.157	.60020	20.75930	-.01360	.01070	.00000	5.65580	.00310	.41890	.09180	.05720
10.344	1.504	.60030	20.57800	-.01080	.00820	.00000	5.65750	.00760	.41930	.09310	.05920
10.359	6.352	.60080	20.24040	-.01160	.00820	.00000	5.65700	.00670	.42800	.09530	.04340
10.371	13.612	.60090	19.74450	-.00940	.00660	.00000	5.64970	.00620	.44230	.09720	.01560
10.391	28.735	.59970	18.70630	-.00410	.00100	.00000	5.63930	.01320	.45460	.09860	-.01810
10.408	43.809	.59970	17.66210	.00120	.00220	.00000	5.63690	.00580	.47680	.09930	-.03490
10.408	48.295	.59950	17.34990	.00520	.00030	.00000	5.63693	.00580	.48310	.09940	-.03660
	GRADIENT	.00000	.00000	.00000	.00000	.00000	.00000	.00000	.00000	.00000	.00000

CA20 747/1 02 SI CARRIER DATA (RGN131) (01 DEC 75)

REFERENCE DATA

SREF = 5500.0000 SQ.FT. XMRP = 1339.9000 IN.XC
LREF = 327.7800 IN. YMRP = .0000 IN.YC
BREF = 2348.0400 IN. ZMRP = 190.8000 IN.ZC
SCALE = .0300

PARAMETRIC DATA

ALPHAC = 4.000 BETAC = .000
ELV-IB = .000 ELV-OB = 3.000
ELEVON = 5.000 MACH = .600
BETAO = .000 PHI = .000
DX = 20.000 DY = .000

RUN NO. 666/ 0 RN/L = 3.30 GRADIENT INTERVAL = -1.00/ 4.00

ALPHAO	DZ	MACH	DX	DY	BETAO	PHI	ALPHAW	BETA	CL	CD	CLM
14.563	1.265	.60070	19.36720	-.00550	.00370	.00000	5.88270	-.00740	.35400	.08090	.21260
14.561	3.972	.59970	19.17960	-.01280	.00290	.00000	5.88100	.00760	.35910	.08310	.20560
14.566	8.805	.60090	18.85080	-.01360	.00120	.00000	5.87500	.00680	.37530	.08750	.16320
14.572	16.457	.60070	18.32510	-.01960	.00040	.00000	5.86880	.01380	.39780	.09180	.10490
14.587	31.737	.59980	17.27880	-.00450	-.00270	.00000	5.85150	.00560	.43150	.09530	.03800
14.597	46.430	.60030	16.26130	.00240	-.00300	.00000	5.84570	.01340	.45330	.09730	.00330
14.592	61.104	.60010	15.24460	.01090	-.00780	.00000	5.84000	.01330	.46870	.09820	-.01750
	GRADIENT	-.00037	-.06931	-.00270	-.00030	.00000	-.00063	.00554	.00188	.00081	-.00259

CA20 747/1 02 SI CARRIER DATA (RGN132) (01 DEC 75)

REFERENCE DATA

SREF = 5500.0000 SQ.FT. XMRP = 1339.9000 IN.XC
LREF = 327.7800 IN. YMRP = .0000 IN.YC
BREF = 2348.0400 IN. ZMRP = 190.8000 IN.ZC
SCALE = .0300

PARAMETRIC DATA

ALPHAC = 8.000 BETAC = .000
ELV-IB = .000 ELV-OB = 3.000
ELEVON = 5.000 MACH = .600
BETAO = .000 PHI = .000
DX = .000 DY = .000

RUN NO. 655/ 0 RN/L = 3.29 GRADIENT INTERVAL = -1.00/ 4.00

ALPHAO	DZ	MACH	DX	DY	BETAO	PHI	ALPHAW	BETA	CL	CD	CLM
10.325	-3.370	.60020	-.58580	-.01840	.00440	.00000	9.73250	.05010	.76320	.14550	-.08960
10.339	-.284	.59980	-1.00620	-.02020	.00540	.00000	9.73490	.04910	.76340	.14500	-.07900
10.358	4.265	.59930	-1.62680	-.01390	.00340	.00000	9.73230	.04020	.77110	.14530	-.08030
10.393	11.674	.59950	-2.64370	-.01290	.00270	.00000	9.72790	.03930	.78370	.14610	-.08410
10.467	26.974	.60060	-4.75500	-.00550	-.00210	.00000	9.72060	.04650	.80520	.14820	-.08660
10.499	41.940	.60090	-6.64130	-.00280	-.00150	.00000	9.71560	.03910	.82000	.15030	-.08370
10.504	47.907	.59980	-7.67280	.00000	-.00430	.00000	9.71420	.04670	.82390	.15060	-.08170
	GRADIENT	.00000	.00000	.00000	.00000	.00000	.00000	.00000	.00000	.00000	.00000

CA20 747/1 02 S1 CARRIER DATA (RGN132) (01 DEC 75)

REFERENCE DATA

SREF = 5500.0000 SQ.FT. XMRP = 1339.5000 IN.XC
LREF = 327.7800 IN. YMRP = .0000 IN.YC
BREF = 2348.0400 IN. ZMRP = 190.8000 IN.ZC
SCALE = .0300

PARAMETRIC DATA

ALPHAC = 8.000 BETAC = .000
ELV-IB = .000 ELV-OB = 3.000
ELEVON = 5.000 MACH = .600
BETAO = .000 PHI = .000
DX = .000 DY = .000

RUN NO. 654/ 0 RN/L = 3.27 GRADIENT INTERVAL = -1.00/ 4.00

ALPHAO	DZ	MACH	DX	DY	BETAO	PHI	ALPHAW	BETA	CL	CD	CLM
14.639	-1.095	.59330	-1.84790	-.01480	.00080	.00000	9.77180	.04180	.66630	.12710	.04170
14.640	1.805	.59300	-2.34740	-.01540	.00040	.00000	9.77590	.04040	.67490	.12910	.03020
14.651	6.322	.59330	-2.98170	-.01730	-.00080	.00000	9.76190	.04750	.69490	.13200	.00780
14.659	13.867	.59320	-4.00010	-.01650	-.00120	.00000	9.75180	.03500	.72280	.13570	-.02990
14.700	28.918	.59340	-6.07590	-.01170	-.00600	.00000	9.73820	.05370	.76130	.14020	-.06090
14.717	43.759	.60060	-8.13400	.00140	-.00650	.00000	9.72610	.04610	.78940	.14430	-.07170
14.720	59.717	.59320	-10.22410	.01690	-.01250	.00000	9.72190	.03830	.80780	.14670	-.07670
	GRADIENT	.00000	.00000	.00000	.00000	.00000	.00000	.00000	.00000	.00000	.00000

CA20 747/1 02 S1 CARRIER DATA (RGN133) (01 DEC 75)

REFERENCE DATA

SREF = 5500.0000 SQ.FT. XMRP = 1339.5000 IN.XC
LREF = 327.7800 IN. YMRP = .0000 IN.YC
BREF = 2348.0400 IN. ZMRP = 190.8000 IN.ZC
SCALE = .0300

PARAMETRIC DATA

ALPHAC = 8.000 BETAC = .000
ELV-IB = .000 ELV-OB = 3.000
ELEVON = 5.000 MACH = .600
BETAO = .000 PHI = .000
DX = 10.000 DY = .000

RUN NO. 659/ 0 RN/L = 3.32 GRADIENT INTERVAL = -1.00/ 4.00

ALPHAO	DZ	MACH	DX	DY	BETAO	PHI	ALPHAW	BETA	CL	CD	CLM
10.260	-3.341	.59330	9.46680	-.00230	.00650	.00000	9.73350	-.00380	.77950	.14540	-.08900
10.281	-.279	.60070	9.04960	-.00670	.00710	.00000	9.73400	.00310	.77900	.14560	-.07690
10.285	4.305	.60080	8.41540	-.00330	.00540	.00000	9.73010	.00210	.78410	.14600	-.07590
10.320	11.789	.60090	7.39060	-.00170	.00420	.00000	9.72910	.00100	.79390	.14680	-.07840
10.393	26.778	.59960	5.31340	.00370	-.00080	.00000	9.72150	.00810	.80910	.14790	-.08080
10.431	41.918	.60030	3.20170	.01180	-.00050	.00000	9.71970	-.00690	.82100	.14950	-.07780
10.441	48.647	.60060	2.25430	.01190	-.00240	.00000	9.71650	.00070	.82450	.15020	-.07670
	GRADIENT	.00000	.00000	.00000	.00000	.00000	.00000	.00000	.00000	.00000	.00000

ORIGINAL PAGE IS
OF POOR QUALITY

CA20 747/1 02 SI CARRIER DATA (RGN133) (01 DEC 75)

REFERENCE DATA

SREF = 5500.0000 SQ.FT. XMRP = 1339.9000 IN.XC
LREF = 327.7800 IN. YMRP = .0000 IN.YC
BREF = 2348.0400 IN. ZMRP = 190.8000 IN.ZC
SCALE = .0300

PARAMETRIC DATA

ALPHAC =	8.000	BETAC =	.000
ELV-IB =	.000	ELV-OB =	3.000
ELEVON =	5.000	MACH =	.600
BETAO =	.000	PHI =	.000
DX =	10.000	DY =	.000

RUN NO. 660/ 0 RN/L = 3.29 GRADIENT INTERVAL = -1.00/ 4.00

ALPHAO	DZ	MACH	DX	DY	BETAO	PHI	ALPHAH	BETA	CL	CD	CLM
14.520	-1.391	.60010	8.03730	.00340	.00250	.00000	9.76000	-.00500	.70850	.13150	.05370
14.524	1.080	.59980	7.69910	.00410	.00150	.00000	9.75650	-.00550	.71300	.13310	.05030
14.540	6.153	.59910	7.00390	-.00180	.00050	.00000	9.75340	.00920	.72690	.13540	.02240
14.567	13.465	.59920	6.00060	-.00690	-.00040	.00000	9.74660	.01620	.74520	.13770	-.01140
14.611	28.593	.59950	3.91600	.00730	-.00720	.00000	9.73550	-.00030	.77620	.14160	-.04790
14.634	43.596	.59940	1.83370	.00150	-.00600	.00000	9.72810	.00760	.79710	.14470	-.06260
14.648	58.440	.60020	-.23670	.01520	-.01150	.00000	9.72500	.00040	.81280	.14780	-.06910
	GRADIENT	.00000	.00000	.00000	.00000	.00000	.00000	.00000	.00000	.00000	.00000

CA20 747/1 02 SI CARRIER DATA (RGN134) (01 DEC 75)

REFERENCE DATA

SREF = 5500.0000 SQ.FT. XMRP = 1339.9000 IN.XC
LREF = 327.7800 IN. YMRP = .0000 IN.YC
BREF = 2348.0400 IN. ZMRP = 190.8000 IN.ZC
SCALE = .0300

PARAMETRIC DATA

ALPHAC =	8.000	BETAC =	.000
ELV-IB =	.000	ELV-OB =	3.000
ELEVON =	5.000	MACH =	.600
BETAO =	.000	PHI =	.000
DX =	20.000	DY =	.000

RUN NO. 668/ 0 RN/L = 3.28 GRADIENT INTERVAL = -1.00/ 4.00

ALPHAO	DZ	MACH	DX	DY	BETAO	PHI	ALPHAH	BETA	CL	CD	CLM
10.184	-3.785	.59970	19.58200	-.01190	.01250	.00000	9.73010	.01060	.80040	.14610	-.11400
10.194	.797	.60000	18.95340	-.01600	.01120	.00000	9.73130	.01700	.79860	.14740	-.09240
10.227	8.220	.59910	17.92710	-.00760	.00800	.00000	9.72960	.00810	.80410	.14810	-.08680
10.297	23.195	.60060	15.84870	-.00440	.00240	.00000	9.72530	.01510	.81720	.14990	-.08380
10.347	38.211	.60080	13.75840	-.00420	.00070	.00000	9.72080	.02340	.82400	.15150	-.07620
10.366	49.398	.60060	12.19640	.00940	-.00190	.00000	9.72110	.00810	.83010	.15270	-.07420
	GRADIENT	.00000	.00000	.00000	.00000	.00000	.00000	.00000	.00000	.00000	.00000

CA20 747/1 02 SI CARRIER DATA (RGN134) (01 DEC 75)

REFERENCE DATA

SREF = 5500.0000 SQ.FT. XMRP = 1339.9000 IN.XC
LREF = 327.7800 IN. YMRP = .0000 IN.YC
BREF = 2348.0400 IN. ZMRP = 190.8000 IN.ZC
SCALE = .0300

PARAMETRIC DATA

ALPHAC =	8.000	BETAC =	.000
ELV-IB =	.000	ELV-OB =	3.000
ELEVON =	5.000	MACH =	.600
BETAO =	.000	PHI =	.000
DX =	20.000	DY =	.000

RUN NO. 667/ 0 . RN/L = 3.29 GRADIENT INTERVAL = -1.00/ 4.00

ALPHAO	DZ	MACH	DX	DY	BETAO	PHI	ALPHAW	BETA	CL	CD	CLM
14.434	-1.978	.60080	18.06030	-.00450	.00850	.00000	9.75690	.00220	.72510	.13390	.04150
14.439	1.123	.59910	17.63650	-.00300	.00720	.00000	9.75390	.00130	.73930	.13590	.04360
14.456	5.657	.60090	17.01440	-.00600	.00540	.00000	9.75090	.00910	.74700	.13930	.03850
14.482	13.169	.59930	15.98070	-.00680	.00360	.00000	9.74550	.00740	.76130	.14030	-.00460
14.529	28.036	.59980	13.92490	-.00740	-.00290	.00000	9.73540	.01440	.78440	.14360	-.02880
14.557	42.826	.60040	11.87180	-.00690	-.00880	.00000	9.73310	.01490	.80220	.14620	-.03280
14.572	57.824	.60030	9.78330	.00220	-.00830	.00000	9.72650	.00760	.81440	.14820	-.03030
	GRADIENT	.00000	.00000	.00000	.00000	.00000	.00000	.00000	.00000	.00000	.00000

CA20 747/1 02 SI CARRIER DATA (RGN135) (01 DEC 75)

REFERENCE DATA

SREF = 5500.0000 SQ.FT. XMRP = 1339.9000 IN.XC
LREF = 327.7800 IN. YMRP = .0000 IN.YC
BREF = 2348.0400 IN. ZMRP = 190.8000 IN.ZC
SCALE = .0300

PARAMETRIC DATA

ALPHAC =	4.000	BETAC =	-5.000
ELV-IB =	.000	ELV-OB =	3.000
ELEVON =	5.000	MACH =	.600
BETAO =	.000	PHI =	.000
DX =	.000	DY =	10.000

RUN NO. 728/ 0 RN/L = 3.27 GRADIENT INTERVAL = -1.00/ 4.00

ALPHAO	DZ	MACH	DX	DY	BETAO	PHI	ALPHAW	BETA	CL	CD	CLM
10.520	-1.686	.59940	.87430	11.02640	.03050	.00000	5.82670	-4.95360	.36830	.08990	-.03020
10.517	1.116	.60050	.69300	11.02080	.03090	.00000	5.82390	-4.95160	.39680	.09120	-.03000
10.515	5.425	.60030	.39060	11.02730	.02690	.00000	5.81750	-4.95100	.40830	.09270	-.03420
10.523	13.265	.60010	-.14640	11.04010	.01690	.00000	5.81350	-4.94970	.42760	.09450	-.04000
10.531	28.048	.59920	-1.15190	11.05910	.00140	.00000	5.80220	-4.96350	.45300	.09560	-.04220
10.541	43.286	.60080	-2.16980	11.08330	-.00820	.00000	5.79360	-4.95030	.47160	.09580	-.04960
	GRADIENT	.00000	.00000	.00000	.00000	.00000	.00000	.00000	.00000	.00000	.00000

CA20 747/1 02 S1 CARRIER DATA (RGN136) (01 DEC 75)

REFERENCE DATA

SREF = 5500.0000 SQ.FT. XMRP = 1339.9000 IN.XC
LREF = 327.7800 IN. YMRP = .0000 IN.YC
BREF = 2348.0400 IN. ZMRP = 190.8000 IN.ZC
SCALE = .0300

PARAMETRIC DATA

ALPHAC =	4.000	BETAC =	-5.000
ELV-IB =	.000	ELV-OB =	3.000
ELEVON =	5.000	MACH =	.800
BETAO =	.000	PHI =	.000
DX =	10.000	DY =	10.000

RUN NO. 732/ 0 RN/L = 3.26 GRADIENT INTERVAL = -1.00/ 4.00

ALPHAO	DZ	MACH	DX	DY	BETAO	PHI	ALPHAW	BETA	CL	CD	CLM
10.431	-2.314	.59980	10.86780	11.92090	.02560	.00000	5.85030	-5.00450	.41860	.08830	-.03240
10.429	1.200	.60050	10.62870	11.91570	.02550	.00000	5.84850	-4.99710	.42420	.08980	-.03480
10.436	5.568	.60040	10.32740	11.92110	.02320	.00000	5.84590	-5.00650	.43210	.09130	-.03550
10.442	12.949	.60080	9.82710	11.92880	.01650	.00000	5.83990	-5.00300	.44550	.09300	-.04030
10.461	28.270	.60060	8.77300	11.95600	.00030	.00000	5.83260	-5.00920	.46580	.09500	-.04480
10.477	43.283	.60010	7.73500	11.96800	-.00600	.00000	5.82690	-5.00680	.48120	.09500	-.05150
10.478	47.066	.59970	7.47070	11.97270	-.00720	.00000	5.82790	-5.01390	.48460	.09490	-.05410
	GRADIENT	.00000	.00000	.00000	.00000	.00000	.00000	.00000	.00000	.00000	.00000

CA20 747/1 02 S1 CARRIER DATA (RGN137) (01 DEC 75)

REFERENCE DATA

SREF = 5500.0000 SQ.FT. XMRP = 1339.9000 IN.XC
LREF = 327.7800 IN. YMRP = .0000 IN.YC
BREF = 2348.0400 IN. ZMRP = 190.8000 IN.ZC
SCALE = .0300

PARAMETRIC DATA

ALPHAC =	4.000	BETAC =	.000
ELV-IB =	.000	ELV-OB =	3.000
ELEVON =	5.000	MACH =	.600
BETAO =	.000	PHI =	.000
DX =	.000	DY =	10.000

RUN NO. 727/ 0 RN/L = 3.35 GRADIENT INTERVAL = -1.00/ 4.00

ALPHAO	DZ	MACH	DX	DY	BETAO	PHI	ALPHAW	BETA	CL	CD	CLM
10.539	-1.720	.59990	.68540	9.98370	.01890	.00000	5.83340	.03160	.37660	.09480	.05580
10.532	1.145	.59910	.68770	9.97640	.02070	.00000	5.83250	.02160	.38600	.09620	.04610
10.533	5.590	.60050	.38650	9.97520	.01990	.00000	5.82510	.01060	.40080	.09750	.02970
10.535	13.225	.60040	-.13250	9.98050	.01510	.00000	5.81720	-.00130	.42330	.09890	.00270
10.542	28.323	.60040	-1.16330	9.99290	.00450	.00000	5.80900	.00080	.45340	.09970	-.02850
10.549	43.196	.60050	-2.17880	10.00810	-.00350	.00000	5.79920	-.00590	.47380	.10010	-.04480
	GRADIENT	.00000	.00000	.00000	.00000	.00000	.00000	.00000	.00000	.00000	.00000

CA20 747/1 02 SI CARRIER DATA (RGN138) (01 DEC 75)

REFERENCE DATA

SREF = 9800.0000 SQ.FT. XMRP = 1339.9000 IN.XC
LREF = 327.7800 IN. YMRP = .0000 IN.YC
BREF = 2348.0400 IN. ZMRP = 190.8000 IN.ZC
SCALE = .0300

PARAMETPIC DATA

ALPHAC =	4.000	BETAC =	.000
ELV-IB =	.000	ELV-OB =	3.000
ELEVON =	5.000	MACH =	.600
BETAO =	.000	PHI =	.000
DX =	10.000	DY =	10.000

RUN NO. 731/ 0 RN/L = 3.29 GRADIENT INTERVAL = -1.00/ 4.00

ALPHAO	DZ	MACH	DX	DY	BETAO	PHI	ALPHAW	BETA	CL	CD	CLM
10.485	-1.917	.60030	10.65750	9.96420	.01980	.00000	5.85920	.06980	.40890	.09380	.04160
10.480	1.208	.60030	10.65520	9.95920	.02020	.00000	5.85440	.06900	.41480	.09540	.03750
10.481	5.640	.60030	10.65340	9.95380	.01950	.00000	5.85330	.07270	.42460	.09670	.02360
10.485	15.089	.60080	9.85100	9.95040	.01540	.00000	5.84330	.06110	.44030	.09520	-.00950
10.487	23.151	.60120	8.79230	9.95930	.00380	.00000	5.83660	.07070	.46520	.09900	-.03070
10.475	43.272	.59930	7.75120	9.95720	-.00320	.00000	5.82760	.05640	.48340	.09950	-.04720
10.474	47.051	.59910	7.46000	9.95950	-.00500	.00000	5.82650	.06460	.48550	.09960	-.05110
	GRADIENT	.00000	.00000	.00000	.00000	.00000	.00000	.00000	.00000	.00000	.00000

CA20 747/1 02 SI CARRIER DATA (RGN139) (01 DEC 75)

REFERENCE DATA

SREF = 9800.0000 SQ.FT. XMRP = 1339.9000 IN.XC
LREF = 327.7800 IN. YMRP = .0000 IN.YC
BREF = 2348.0400 IN. ZMRP = 190.8000 IN.ZC
SCALE = .0300

PARAMETRIC DATA

ALPHAC =	4.000	BETAC =	5.000
ELV-IB =	.000	ELV-OB =	3.000
ELEVON =	5.000	MACH =	.600
BETAO =	.000	PHI =	.000
DX =	.000	DY =	10.000

RUN NO. 729/ 0 RN/L = 3.25 GRADIENT INTERVAL = -1.00/ 4.00

ALPHAO	DZ	MACH	DX	DY	BETAO	PHI	ALPHAW	BETA	CL	CD	CLM
10.550	-1.816	.60090	.65490	8.78140	.04000	.00000	5.83180	5.12510	.38050	.09000	.09880
10.535	1.291	.59920	.67080	8.78360	.03380	.00000	5.82790	5.11980	.39210	.09110	.07700
10.535	5.717	.60090	.37070	8.78850	.02850	.00000	5.82240	5.10560	.40820	.09190	.04730
10.534	13.051	.59930	-.13060	8.79350	.02100	.00000	5.81730	5.09230	.42890	.09250	.00570
10.539	28.154	.59540	-1.16040	8.80950	.00920	.00000	5.80400	5.09540	.45950	.09310	-.04000
10.541	43.343	.60000	-2.19330	8.81680	.00080	.00000	5.79690	5.10330	.47880	.09350	-.05800
	GRADIENT	.00000	.00000	.00000	.00000	.00000	.00000	.00000	.00000	.00000	.00000

ORIGINAL PAGE IS
OF POOR QUALITY

CA20 747/1 02 S1 CARRIER DATA (RGN140) (01 DEC 75)

REFERENCE DATA

SREF =	5500.0000 SQ.FT.	XMRP =	1339.9000 IN.XC
LREF =	327.7800 IN.	YMRP =	.0000 IN.YC
BREF =	2348.0400 IN.	ZMRP =	190.8000 IN.ZC
SCALE =	.0300		

PARAMETRIC DATA

ALPHAC =	4.000	BETAC =	5.000
ELV-IB =	.000	ELV-OB =	3.000
ELEVON =	5.000	MACH =	.600
BETAO =	.000	PHI =	.000
DX =	10.000	DY =	10.000

RUN NO. 733/ 0 RN/L = 3.26 GRADIENT INTERVAL = -1.00/ 4.00

ALPHAO	DZ	MACH	DX	DY	BETAO	PHI	ALPHAH	BETA	CL	CD	CLM
10.454	-1.821	.60040	10.83530	7.94520	.03540	.00000	5.85460	5.01710	.41260	.09030	.07990
10.451	1.281	.60080	10.62330	7.94600	.03110	.00000	5.85280	5.01310	.41860	.09160	.06630
10.450	5.640	.60050	10.32500	7.95330	.02550	.00000	5.84960	4.99880	.42820	.09210	.04150
10.454	13.081	.60000	9.81810	7.95780	.01940	.00000	5.84150	4.99280	.44490	.09270	.00430
10.469	28.314	.60080	8.77030	7.96820	.00690	.00000	5.83440	4.99560	.47070	.09300	-.04050
10.478	43.187	.60060	7.74450	7.97620	.00060	.00000	5.82840	4.99600	.48720	.09340	-.05470
10.479	47.015	.60040	7.47410	7.97880	-.00120	.00000	5.83180	4.99630	.49030	.09350	-.05680
	GRADIENT	.00000	.00000	.00000	.00000	.00000	.00000	.00000	.00000	.00000	.00000

CA20 747/1 01 S1 CARRIER DATA (RGN141) (01 DEC 75)

REFERENCE DATA

SREF =	5500.0000 SQ.FT.	XMRP =	1339.9000 IN.XC
LREF =	327.7800 IN.	YMRP =	.0000 IN.YC
BREF =	2348.0400 IN.	ZMRP =	190.8000 IN.ZC
SCALE =	.0300		

PARAMETRIC DATA

ALPHAC =	4.000	BETAC =	.000
ELV-IB =	10.000	ELV-OB =	13.000
ELEVON =	5.000	MACH =	.600
BETAO =	.000	PHI =	.000
DX =	.000	DY =	.000

RUN NO. 707/ 0 RN/L = 3.25 GRADIENT INTERVAL = .00/ 12.00

ALPHAO	DZ	MACH	DX	DY	BETAO	PHI	ALPHAH	BETA	CL	CD	CL
10.523	-1.884	.60080	.67920	-.01420	.01180	.00000	5.83190	.00050	.42190	.10120	-.11500
10.504	.978	.59910	.68440	-.01200	.01100	.00000	5.83240	.00020	.42730	.10150	-.10870
10.501	5.523	.59930	.37680	-.01360	.01060	.00000	5.82540	.00740	.44010	.10270	-.12650
10.504	13.055	.59950	-.13550	-.00840	.00810	.00000	5.81690	-.00060	.46310	10460	-.16310
10.516	28.002	.59950	-1.15670	-.00310	.00260	.00000	5.80490	.00670	.49560	.10610	-.20540
10.523	42.970	.59980	-2.18400	.00060	.00280	.00000	5.79720	-.00120	.51670	.10610	-.22560
	GRADIENT	.00004	-.06769	-.00035	-.00009	.00000	-.00154	.00158	.00282	.00026	-.00436

CA20 747/1 01 SI CARRIER DATA (RGN141) (01 DEC 75)

REFERENCE DATA

SREF = 5500.0000 SQ.FT. XMRP = 1339.9000 IN.XC
LREF = 327.7800 IN. YMRP = .0000 IN.YC
BREF = 2348.0400 IN. ZMRP = 190.8000 IN.ZC
SCALE = .0300

PARAMETRIC DATA

ALPHAC =	4.000	BETAC =	.000
ELV-IB =	10.000	ELV-OB =	13.000
ELEVON =	5.000	MACH =	.600
BETAO =	.000	PHI =	.000
DX =	.000	DY =	.000

RUN NO. 708/ 0 RN/L = 3.19 GRADIENT INTERVAL = .00/ 12.00

ALPHAO	DZ	MACH	DX	DY	BETAO	PHI	ALPHAW	BETA	CL	CD	CLM
14.811	.024	.60020	-.26990	-.01340	.00760	.00000	5.88280	-.00700	.33240	.08870	.02890
14.784	3.045	.59940	-.47840	-.01140	.00760	.00000	5.85590	-.00050	.34060	.08980	.02260
14.771	7.498	.59800	-.76610	-.01170	.00750	.00000	5.85370	-.00070	.35330	.09440	-.01820
14.765	14.984	.60030	-1.29790	-.00650	.00470	.00000	5.83950	-.00790	.40150	.10000	-.08430
14.762	28.993	.59970	-2.32350	.00060	.00050	.00000	5.81930	-.00140	.45050	.10340	-.15410
14.773	45.117	.60060	-3.38230	.00450	-.00040	.00000	5.80650	-.00140	.48380	.10460	-.19220
	GRADIENT	-.00016	-.06907	.00021	-.00005	.00000	-.00120	.00078	.00421	.00078	-.00652

CA20 747/1 01 SI CARRIER DATA (RGN142) (01 DEC 75)

REFERENCE DATA

SREF = 5500.0000 SQ.FT. XMRP = 1339.9000 IN.XC
LREF = 327.7800 IN. YMRP = .0000 IN.YC
BREF = 2348.0400 IN. ZMRP = 190.8000 IN.ZC
SCALE = .0300

PARAMETRIC DATA

ALPHAC =	4.000	BETAC =	.000
ELV-IB =	-10.000	ELV-OB =	-7.000
ELEVON =	5.000	MACH =	.600
BETAO =	.000	PHI =	.000
DX =	.000	DY =	.000

RUN NO. 709/ 0 RN/L = 3.26 GRADIENT INTERVAL = .00/ 12.00

ALPHAO	DZ	MACH	DX	DY	BETAO	PHI	ALPHAW	BETA	CL	CD	CLM
10.510	-2.321	.59970	.91020	-.01830	.01330	.00000	5.87430	-.00070	.30250	.08640	.38110
10.492	.765	.59940	.70150	-.01330	.01170	.00000	5.87190	-.00110	.30910	.08750	.37180
10.488	5.227	.60050	.40050	-.01330	.01100	.00000	5.86880	-.00160	.32340	.08870	.35620
10.491	12.822	.60020	-.11430	-.01030	.00900	.00000	5.86560	-.00190	.34520	.09130	.32710
10.501	27.760	.60030	-1.13010	-.00340	.00300	.00000	5.86560	.00540	.37540	.09280	.30040
10.504	42.754	.59920	-2.15980	-.00220	.00320	.00000	5.86080	.00530	.39510	.09320	.28900
	GRADIENT	.00025	-.05746	.00000	-.00016	.00000	-.00114	-.00011	.00320	.00027	-.00350

RUN NO. 710/ 0 RN/L = 3.22 GRADIENT INTERVAL = .00/ 12.00

ALPHAO	DZ	MACH	DX	DY	BETAO	PHI	ALPHAW	BETA	CL	CD	CLM
14.880	.715	.59930	-.33240	-.01950	.00830	.00000	5.90190	-.00950	.22610	.07500	.47100
14.855	3.826	.60000	-.54650	-.01550	.00790	.00000	5.89770	-.00950	.23760	.07680	.44890
14.843	8.214	.59990	-.84750	-.01270	.00700	.00000	5.89190	-.00240	.25390	.08020	.42950
14.833	16.830	.59920	-1.36850	-.00580	.00540	.00000	5.87920	-.00950	.28980	.08590	.38560
14.832	30.666	.59990	-2.37840	.00030	.00040	.00000	5.86080	.00500	.33370	.08980	.34130
14.845	45.837	.60070	-3.41720	.00350	.00010	.00000	5.84980	-.00250	.36420	.09160	.31590
	GRADIENT	-.00000	-.06869	.00089	-.00018	.00000	-.00133	.00087	.00371	.00070	-.00546

CA20 747/1 01 S1 CARRIER DATA (RGN1143) (01 DEC 75)

REFERENCE DATA

SREF =	5500.0000 SQ.FT.	XMRP =	1339.9000 IN.XC		
LREF =	327.7800 IN.	YMRP =	.0000 IN.YC		
BREF =	2348.0400 IN.	ZMRP =	190.8000 IN.ZC		
SCALE =	.0300				

PARAMETRIC DATA

ALPHAC =	4.000	BETAC =	.000
RUD-U =	15.000	RUD-L =	15.000
ELEVON =	5.000	AILRON =	.000
BETAO =	.000	PHI =	.000
DX =	.000	DY =	.000

RUN NO. 711/ 0 RN/L = 3.26 GRADIENT INTERVAL = .00/ 12.00

ALPHAO	DZ	MACH	DX	DY	BETAO	PHI	ALPHAW	BETA	CL	CD	CLM
10.504	-2.028	.60040	.90180	-.00790	.00910	.00000	5.83170	.02080	.37970	.09690	.06980
10.485	.931	.60010	.70250	-.00660	.00820	.00000	5.83280	.02910	.38320	.09750	.07590
10.480	5.560	.59930	.38950	-.00470	.00730	.00000	5.82470	.02230	.39860	.09920	.05170
10.486	12.957	.60060	-.11140	-.00170	.00580	.00000	5.81620	.02310	.42170	.10150	.02030
10.495	27.883	.59980	-1.12660	-.00090	.00160	.00000	5.80430	.03860	.45410	.10310	-.01320
10.513	42.996	.60040	-2.16480	.00170	.00120	.00000	5.79700	.03140	.47410	.10340	-.02940
	GRADIENT	-.00017	-.05762	.00041	-.00019	.00000	-.00175	-.00147	.00333	.00037	-.00523

RUN NO. 712/ 0 RN/L = 3.23 GRADIENT INTERVAL = .00/ 12.00

ALPHAO	DZ	MACH	DX	DY	BETAO	PHI	ALPHAW	BETA	CL	CD	CLM
14.850	.267	.59970	-.28590	-.00380	.00380	.00000	5.86580	.01490	.29250	.08570	.19430
14.835	3.331	.60060	-.49550	-.00180	.00300	.00000	5.86000	.02250	.30220	.08730	.18100
14.823	7.779	.59990	-.80040	-.00110	.00300	.00000	5.85040	.02240	.32230	.09080	.15250
14.816	15.438	.60000	-1.32290	.00080	.00190	.00000	5.83870	.02460	.36000	.09660	.09350
14.812	30.319	.60000	-2.33750	.00670	-.00120	.00000	5.82090	.02360	.40860	.10060	.03370
14.814	45.332	.60030	-3.36420	.00880	-.00280	.00000	5.80920	.03150	.44070	.10210	.00090
	GRADIENT	.00001	-.06850	.00034	-.00010	.00000	-.00206	.00093	.00401	.00069	-.00563

CA20 747/1 02 SI CARRIER DATA (RGN144) (01 DEC 75)

REFERENCE DATA

SREF = 5500.0000 SQ.FT. XMRP = 1339.9000 IN.XC
LREF = 327.7800 IN. YMRP = .0000 IN.YC
BREF = 2348.0400 IN. ZMRP = 190.8000 IN.ZC
SCALE = .0300

PARAMETRIC DATA

ALPHAC =	4.000	BETAC =	.000
RUD-U =	15.000	RUD-L =	15.000
ELEVON =	5.000	AILRON =	.000
BETAO =	.000	PHI =	.000
DX =	.000	DY =	.000

RUN NO. 725/ 0 RN/L = 3.35 GRADIENT INTERVAL = -1.00/ 4.00

ALPHAO	DZ	MACH	DX	DY	BETAO	PHI	ALPHAH	BETA	CL	CD	CLM
10.493	-2.198	.59920	.65940	-.02120	.00800	.00000	5.83560	.04360	.38630	.10010	.01640
10.490	.873	.60080	.65950	-.01790	.00720	.00000	5.83230	.04430	.39580	.10130	.01310
10.498	5.397	.60040	.34600	-.01530	.00630	.00000	5.82620	.04540	.41240	.10280	-.00410
10.503	12.963	.60040	-.17060	-.01280	.00430	.00000	5.82090	.04640	.43330	.10410	-.02030
10.527	28.053	.60080	-1.20520	-.00340	-.00140	.00000	5.81010	.05480	.46330	.10490	-.03650
10.533	42.969	.59970	-2.22510	-.00150	-.00120	.00000	5.80140	.05530	.48080	.10480	-.04560
	GRADIENT	.00000	.00000	.00000	.00000	.00000	.00000	.00000	.00000	.00000	.00000

CA20 747/1 01 SI CARRIER DATA (RGN145) (01 DEC 75)

REFERENCE DATA

SREF = 5500.0000 SQ.FT. XMRP = 1339.9000 IN.XC
LREF = 327.7800 IN. YMRP = .0000 IN.YC
BREF = 2348.0400 IN. ZMRP = 190.8000 IN.ZC
SCALE = .0300

PARAMETRIC DATA

ALPHAC =	4.000	BETAC =	.000
ELV-IB =	.000	ELV-OB =	3.000
ELEVON =	.000	MACH =	.600
BETAO =	.000	PHI =	.000
DX =	.000	DY =	.000

RUN NO. 719/ 0 RN/L = 3.37 GRADIENT INTERVAL = .00/ 12.00

ALPHAO	DZ	MACH	DX	DY	BETAO	PHI	ALPHAH	BETA	CL	CD	CLM
10.508	-2.315	.59950	.66160	-.02240	.01230	.00000	5.83900	.01600	.39960	.09910	-.00860
10.485	.910	.60010	.64410	-.01560	.01010	.00000	5.83720	.00790	.40530	.09920	-.00260
10.479	5.273	.60050	.34780	-.01470	.00900	.00000	5.83290	.00740	.41720	.10010	-.01400
10.493	12.814	.59990	-.17030	-.01270	.00720	.00000	5.82510	.00680	.43890	.10090	-.03500
10.514	27.985	.59390	-1.20940	-.00700	.00240	.00000	5.81500	.01410	.46690	.10120	-.05470
10.516	42.855	.60060	-2.22930	-.00590	.00230	.00000	5.81080	.01410	.48490	.10090	-.06160
	GRADIENT	.00009	-.05790	.00021	-.00025	.00000	-.00093	-.00011	.00273	.00021	-.00261

RUN NO. 720/ 0 RN/L = 3.36 GRADIENT INTERVAL = .00/ 12.00

ALPHAO	DZ	MACH	DX	DY	BETAO	PHI	ALPHAH	BETA	CL	CD	CLM
14.834	.261	.59990	-.35440	-.01240	.00660	.00000	5.87110	.00780	.31260	.09690	.12590
14.809	3.316	.60070	-.56180	-.01030	.00610	.00000	5.86790	.00710	.32230	.09870	.12480
14.796	7.681	.60060	-.86160	-.00870	.00450	.00000	5.85940	.01500	.34540	.09290	.09620
14.787	15.322	.60020	-1.38380	-.00440	.00320	.00000	5.84680	.00720	.37970	.09640	.03780
14.765	30.199	.60020	-2.40060	.00200	.00030	.00000	5.83010	.01380	.42570	.09900	-.00930
14.785	45.162	.59980	-3.43280	.00150	-.00110	.00000	5.82200	.01400	.45400	.09960	-.03310
	GRADIENT	.00009	-.06938	.00049	-.00029	.00000	-.00160	.00103	.00448	.00082	-.00559

CA20 747/1 01 SI CARRIER DATA (RGN146) (01 DEC 75)

REFERENCE DATA

SREF = 5500.0000 SQ.FT. XMRP = 1339.9000 IN.XC
LREF = 327.7800 IN. YMRP = .0000 IN.YC
BREF = 2348.0400 IN. ZMRP = 190.8000 IN.ZC
SCALE = .0300

PARAMETRIC DATA

ALPHAC = 4.000 BETAC = .000
ELV-IB = .000 ELV-OB = 3.000
ELEVON = 10.000 MACH = .600
BETAO = .000 PHI = .000
DX = .000 DY = .000

RUN NO. 714/ 0 RN/L = 3.32 GRADIENT INTERVAL = .00/ 12.00

ALPHAO	DZ	MACH	DX	DY	BETAO	PHI	ALPHAW	BETA	CL	CD	CLM
10.553	-1.753	.60000	.91190	-.01320	.01160	.00000	5.84170	.00730	.35800	.08900	.14090
10.538	1.319	.59950	.70500	-.01080	.01060	.00000	5.84200	-.00080	.36350	.08990	.13160
10.533	5.976	.59920	.39120	-.00710	.00880	.00000	5.83500	-.00140	.37640	.09180	.10980
10.546	13.370	.59940	-.11340	-.00420	.00710	.00000	5.82500	-.00930	.40320	.09540	.05600
10.559	28.434	.59980	-1.13730	-.00290	.00230	.00000	5.81090	.01370	.44120	.09810	.00240
10.566	43.399	.60040	-2.16030	.00340	.00160	.00000	5.80210	-.00170	.46510	.09910	-.02560
	GRADIENT	-.00006	-.06738	.00079	-.00039	.00000	-.00158	-.00013	.00277	.00041	-.00468

RUN NO. 715/ 0 RN/L = 3.26 GRADIENT INTERVAL = .00/ 12.00

ALPHAO	DZ	MACH	DX	DY	BETAO	PHI	ALPHAW	BETA	CL	CD	CLM
14.836	.243	.60050	-.21980	.00160	.00540	.00000	5.87510	-.00800	.27270	.07630	.25730
14.814	3.412	.59960	-.43820	.00680	.00600	.00000	5.87140	-.00830	.28280	.07920	.23360
14.803	7.911	.60000	-.74500	.00770	.00520	.00000	5.86270	.00650	.30010	.08180	.20060
14.796	15.416	.60060	-1.25670	.01250	.00400	.00000	5.84880	-.00140	.33830	.08970	.13770
14.790	30.282	.60080	-2.27070	.01570	-.00090	.00000	5.82830	-.00970	.39370	.09520	.05350
14.791	45.331	.59950	-3.30390	.01700	-.00250	.00000	5.81480	-.00190	.43030	.09730	.00780
	GRADIENT	-.00005	-.06847	.00076	-.00016	.00000	-.00164	.00198	.00359	.00071	-.00739

ORIGINAL PAGE IS OF POOR QUALITY

CA20 747/1 01 SI CARRIER DATA (RGN147) (01 DEC 75)

REFERENCE DATA

SREF =	5500.0000 SQ.FT.	XMRP =	1339.9000	IN.XC	
LREF =	327.7800 IN.	YMRP =	.0000	IN.YC	
BREF =	2348.0400 IN.	ZMRP =	190.8000	IN.ZC	
SCALE =	.0300				

PARAMETRIC DATA

ALPHAC =	4.000	BETAC =	.000
ELV-IB =	.000	ELV-OB =	3.000
ELEVON =	10.000	MACH =	.300
BETAO =	.000	PHI =	.000
DX =	.000	DY =	.000

RUN NO. 717/ 0 RN/L = 1.89 GRADIENT INTERVAL = .00/ 12.00

ALPHAO	DZ	MACH	DX	DY	BETAO	PHI	ALPHAH	BETA	CL	CD	CLM
10.141	-2.619	.29950	.81180	.00220	.00350	.00000	5.83780	-.01830	.34340	.08280	.08780
10.136	.296	.29970	.61310	.00380	.00280	.00000	5.83750	-.01850	.34430	.08320	.08790
10.135	4.872	.30050	.30110	.00390	.00260	.00000	5.83370	-.01870	.35490	.08490	.08480
10.138	12.202	.29950	-.20310	.00500	.00180	.00000	5.82540	-.01890	.37780	.08780	.01320
10.139	26.955	.29920	-1.21700	.00550	.00010	.00000	5.81450	-.01120	.40900	.09050	-.03600
10.142	42.221	.30030	-2.26320	.00710	-.00030	.00000	5.80700	-.01130	.42850	.09130	-.05410
	GRADIENT	.00017	-.06820	.00002	-.00004	.00000	-.00083	-.00004	.00232	.00037	-.00505

CA20 747/1 01 SI CARRIER DATA (RGN148) (01 DEC 75)

REFERENCE DATA

SREF =	5500.0000 SQ.FT.	XMRP =	1339.9000	IN.XC	
LREF =	327.7800 IN.	YMRP =	.0000	IN.YC	
BREF =	2348.0400 IN.	ZMRP =	190.8000	IN.ZC	
SCALE =	.0300				

PARAMETRIC DATA

ALPHAC =	4.000	BETAC =	.000
ELV-IB =	.000	ELV-OB =	3.000
ELEVON =	10.000	MACH =	.700
BETAO =	.000	PHI =	.000
DX =	.000	DY =	.000

RUN NO. 716/ 0 RN/L = 3.54 GRADIENT INTERVAL = .00/ 12.00

ALPHAO	DZ	MACH	DX	DY	BETAO	PHI	ALPHAH	BETA	CL	CD	CLM
10.694	-1.671	.69950	1.00630	-.00650	.00800	.00000	5.84060	.00160	.37100	.09250	.18210
10.676	1.362	.69940	.80310	-.00020	.00550	.00000	5.84050	-.00650	.37740	.09380	.16980
10.669	5.761	.69990	.50690	.00080	.00430	.00000	5.83300	.00040	.39180	.09610	.14860
10.672	13.248	.69970	.00210	.00210	.00320	.00000	5.82130	-.00760	.42660	.09990	.09110
10.678	28.136	.69950	-1.01140	.00480	-.00020	.00000	5.80840	-.01510	.46330	.10330	.03430
10.687	43.386	.70020	-2.04590	.00670	-.00150	.00000	5.79430	-.00790	.48930	.10450	.00790
	GRADIENT	.00011	-.06688	.00023	-.00027	.00000	-.00170	.00157	.00327	.00052	-.00482

DATE 01 DEC 75 TABULATED SOURCE DATA - CA20

CA20 747/1 01 S1 CARRIER DATA (RGN149) (01 DEC 75)

REFERENCE DATA

SREF = 5500.0000 SQ.FT. XMRP = 1339.9000 IN.XC
LREF = 327.7800 IN. YMRP = .0000 IN.YC
BREF = 2348.0400 IN. ZMRP = 190.8000 IN.ZC
SCALE = .0300

PARAMETRIC DATA

ALPHAC =	4.000	BETAC =	.000
RUD-U =	.000	RUD-L =	.000
ELEVON =	5.000	AILRON =	-10.000
BETAO =	.000	PHI =	.000
DX =	.000	DY =	.000

RUN NO. 722/ 0 RN/L = 3.33 GRADIENT INTERVAL = .00/ 12.00

ALPHAO	DZ	MACH	DX	DY	BETAO	PHI	ALPHAW	BETA	CL	CD	CLM
10.503	-2.010	.59960	.89090	.25100	-.08650	.00000	5.85820	.01850	.37980	.09180	.07900
10.487	1.016	.60000	.68680	.25740	-.09050	.00000	5.85620	.01730	.38570	.09290	.07248
10.482	5.470	.60000	.38360	.26120	-.09370	.00000	5.85130	.01560	.39930	.09390	.05390
10.481	12.919	.59940	-.12140	.26800	-.09910	.00000	5.84070	.00120	.42320	.09640	.01450
10.484	28.155	.59990	-1.16420	.27880	-.10760	.00000	5.82680	.01190	.45680	.09830	-.02620
10.501	42.900	.60060	-2.17720	.28710	-.11030	.00000	5.82100	.00890	.47730	.09980	-.04280
	GRADIENT	.00000	-.06808	.00085	-.00072	.00000	-.00110	-.00038	.00305	.00022	-.00415

RUN NO. 723/ 0 RN/L = 3.28 GRADIENT INTERVAL = .00/ 12.00

ALPHAO	DZ	MACH	DX	DY	BETAO	PHI	ALPHAW	BETA	CL	CD	CLM
14.792	.127	.60030	-.27480	.24900	-.09720	.00000	5.88580	.01450	.30330	.08350	.16950
14.780	2.855	.59940	-.46850	.25950	-.09840	.00000	5.88230	.01270	.30750	.08390	.17730
14.769	7.573	.59960	-.79580	.26120	-.10000	.00000	5.87690	.02520	.32890	.08760	.13820
14.755	15.007	.60020	-1.29790	.26930	-.10580	.00000	5.86080	.01260	.36140	.09120	.09030
14.753	30.023	.60080	-2.32950	.28280	-.11230	.00000	5.84740	.00450	.41220	.09570	.02160
14.748	45.056	.60010	-3.36330	.28550	-.11380	.00000	5.83310	.00650	.44470	.09780	-.01330
	GRADIENT	-.00008	-.06891	.00150	-.00037	.00000	-.00119	.00157	.00356	.00058	-.00465

CA20 747/0 01 SI AT38 AT39 CARRIER DATA (AGN040) (01 DEC 75)

REFERENCE DATA

SREF =	6500.0000 SQ.FT.	XMRP =	1339.9000 IN.XC
LREF =	327.7800 IN.	YMRP =	.0000 IN.YC
BREF =	2348.0400 IN.	ZMRP =	190.8000 IN.ZC
SCALE =	.0300		

PARAMETRIC DATA

ALPHAC =	.000	BETAC =	.000
ELV-IB =	.000	ELV-OB =	3.000
ELEVON =	5.000	MACH =	.600
BETAO =	.000	PHI =	.000
DX =	.000	DY =	.000

RUN NO. 619/ 0 RN/L = 3.37 GRADIENT INTERVAL = -1.00/ 4.00

ALPHAO	DZ	MACH	DX	DY	BETAO	PHI	ALPHAW	BETA	CY	CLN	CSL
8.543	1.997	.59950	3.60120	-.03230	.01640	.00000	1.94510	.05340	-.00580	.00060	.00120
8.536	4.846	.60050	3.59700	-.02820	.01400	.00000	1.94340	.05390	-.00580	.00010	.00130
8.531	9.288	.59950	3.59490	-.02610	.01230	.00000	1.94340	.05390	-.00580	.00010	.00130
8.529	17.091	.59930	3.59790	-.02240	.00940	.00000	1.92880	.06010	-.00820	.00190	.00080
8.525	31.807	.59930	3.60800	-.01460	.00500	.00000	1.91450	.05980	-.00920	.00230	.00060
8.523	35.614	.60000	3.61500	-.01210	.00510	.00000	1.91010	.05200	-.00940	.00240	.00050
	GRADIENT	.00000	.00000	.00000	.00000	.00000	.00000	.00000	.00000	.00000	.00000

CA20 747/0 01 SI AT38 AT39 CARRIER DATA (AGN041) (01 DEC 75)

REFERENCE DATA

SREF =	6500.0000 SQ.FT.	XMRP =	1339.9000 IN.XC
LREF =	327.7800 IN.	YMRP =	.0000 IN.YC
BREF =	2348.0400 IN.	ZMRP =	190.8000 IN.ZC
SCALE =	.0300		

PARAMETRIC DATA

ALPHAC =	4.000	BETAC =	.000
ELV-IB =	.000	ELV-OB =	3.000
ELEVON =	5.000	MACH =	.600
BETAO =	.000	PHI =	.000
DX =	.000	DY =	.000

RUN NO. 621/ 0 RN/L = 3.27 GRADIENT INTERVAL = -1.00/ 4.00

ALPHAO	DZ	MACH	DX	DY	BETAO	PHI	ALPHAW	BETA	CY	CLN	CSL
12.656	.965	.59940	-.05780	-.01660	.00690	.00000	5.83310	.06160	-.00820	.00030	.00080
12.650	4.780	.59960	-.33520	-.01570	.00350	.00000	5.82950	.06090	-.00870	.00090	.00070
12.648	8.651	.59950	-.59320	-.01060	.00330	.00000	5.82270	.04540	-.00949	.00140	.00050
12.651	15.655	.60020	-1.07500	-.00980	.00120	.00000	5.81040	.05270	-.01060	.00200	.00030
12.672	30.655	.60070	-2.11910	-.00380	-.00410	.00000	5.79490	.05010	-.01070	.00250	.00000
12.678	45.576	.60050	-3.13100	-.00250	-.00480	.00000	5.76510	.05010	-.01070	.00250	-.00010
12.678	60.229	.59990	-4.14410	.01270	-.01300	.00000	5.77850	.05240	-.01060	.00250	-.00020
	GRADIENT	.00000	.00000	.00000	.00000	.00000	.00000	.00000	.00000	.00000	.00000

CA20 747/0 01 S1 AT3B AT39 CARRIER DATA (AGN042) (01 DEC 75)

REFERENCE DATA

SREF =	5500.0000 SQ.FT.	XMRP =	1339.9000 IN.XC
LREF =	327.7800 IN.	YMRP =	.0000 IN.YC
BREF =	2348.0400 IN.	ZMRP =	190.8000 IN.ZC
SCALE =	.0300		

PARAMETRIC DATA

ALPHAC =	8.000	BETAC =	.000
ELV-IB =	.000	ELV-OB =	3.000
ELEVON =	5.000	MACH =	.600
BETAO =	.000	PHI =	.000
DX =	.000	DY =	.000

RUN NO. 620/ 0 RN/L = 3.33 GRADIENT INTERVAL = -1.00/ 4.00

ALPHAO	DZ	MACH	DX	DY	BETAO	PHI	ALPHAH	BETA	CY	CLN	CSL
16.829	3.116	.59950	-2.43120	-.02120	.00530	.00000	9.76940	.03940	-.01090	.00150	.00000
16.828	8.039	.59960	-2.83530	-.01980	.00420	.00000	9.76310	.05540	-.01040	.00110	.00010
16.849	18.388	.60060	-4.63450	-.00890	.00070	.00000	9.74570	.06220	-.01230	.00260	-.00030
16.864	32.988	.60080	-6.55190	.00410	-.00220	.00000	9.73110	.06210	-.01270	.00290	-.00030
16.870	49.151	.59930	-8.66310	.01220	-.00550	.00000	9.72170	.05490	-.01190	.00260	-.00040
16.886	63.071	.59990	-10.74270	.02870	-.01480	.00000	9.71610	.06290	-.01130	.00250	-.00020
	GRADIENT	.00000	.00000	.00000	.00000	.00000	.00000	.00000	.00000	.00000	.00000

CA20 747/0 01 S1 AT3B AT39 CARRIER DATA (AGN043) (01 DEC 75)

REFERENCE DATA

SREF =	5500.0000 SQ.FT.	XMRP =	1339.9000 IN.XC
LREF =	327.7800 IN.	YMRP =	.0000 IN.YC
BREF =	2348.0400 IN.	ZMRP =	190.8000 IN.ZC
SCALE =	.0300		

PARAMETRIC DATA

ALPHAC =	4.000	BETAC =	-5.000
ELV-IB =	.000	ELV-OB =	3.000
ELEVON =	5.000	MACH =	.600
BETAO =	-5.000	PHI =	.000
DX =	.000	DY =	.000

RUN NO. 622/ 0 RN/L = 3.34 GRADIENT INTERVAL = -1.00/ 4.00

ALPHAO	DZ	MACH	DX	DY	BETAO	PHI	ALPHAH	BETA	CY	CLN	CSL
12.644	1.130	.59920	-.11230	1.40980	-5.21950	.00000	5.83690	-4.98500	.09980	-.01750	.01500
12.623	4.337	.59930	-.33720	1.40240	-5.22240	.00000	5.82570	-4.97960	.10510	-.02310	.01610
12.617	8.510	.59940	-.62560	1.42200	-5.22820	.00000	5.82070	-4.98110	.09900	-.02140	.01640
12.618	16.134	.59970	-1.14280	1.44840	-5.23970	.00000	5.80320	-4.98220	.09450	-.01990	.01670
12.630	31.004	.59900	-2.16520	1.47370	-5.24900	.00000	5.79220	-4.98470	.08890	-.01710	.01650
12.635	46.251	.59950	-3.21640	1.48210	-5.25230	.00000	5.78510	-4.97510	.09200	-.01910	.01750
12.636	60.055	.59910	-4.17150	1.48950	-5.25550	.00000	5.77980	-4.98250	.09230	-.01940	.01760
	GRADIENT	.00000	.00000	.00000	.00000	.00000	.00000	.00000	.00000	.00000	.00000

CA20 747/0 02 S1 AT38 AT39 CARRIER DATA (AGN044) (01 DEC 75)

REFERENCE DATA

SREF = 5500.0000 SQ.FT. XMRP = 1339.9000 IN.XC
LREF = 327.7800 IN YMRP = .0000 IN.YC
BREF = 2348.0400 IN. ZMRP = 190.8000 IN.ZC
SCALE = .0300

PARAMETRIC DATA

ALPHAC = 4.000 BETAC = -5.000
ELV-IB = .000 ELV-OB = 3.000
ELEVON = 5.000 MACH = .600
BETAO = -5.000 PHI = .000
DX = .000 DY = .000

RUN NO. 623/ 0 RN/L = 3.33 GRADIENT INTERVAL = -1.00/ 4.00

ALPHAO	DZ	MACH	DX	DY	BETAO	PHI	ALPHAW	BETA	CY	CLN	CSL
12.689	1.078	.60000	-.11690	1.45730	-5.21700	.00000	5.03930	-4.98900	.09280	-.01310	.01460
12.667	4.227	.60030	-.34260	1.45710	-5.21810	.00000	5.03370	-4.99230	.09730	-.01770	.01540
12.664	8.517	.60090	-.63820	1.47060	-5.22580	.00000	5.02500	-4.99420	.09960	-.01780	.01550
12.671	16.093	.60020	-1.16010	1.48740	-5.23480	.00000	5.01380	-4.97680	.09170	-.01740	.01600
12.680	31.112	.59970	-2.19170	1.51140	-5.24470	.00000	5.79960	-4.97500	.09350	-.01920	.01700
12.697	46.160	.600..	-3.22910	1.51770	-5.24610	.00000	5.76340	-4.97470	.09300	-.01950	.01750
12.700	60.200	.59940	-4.20270	1.52760	-5.24540	.00000	5.78270	-4.98230	.09330	-.01970	.01760
	GRADIENT	.00000	.00000	.00000	.00000	.00000	.00000	.00000	.00000	.00000	.00000

CA20 747/1 01 S1 AT38 AT39 CARRIER DATA (AGN045) (01 DEC 75)

REFERENCE DATA

SREF = 5500.0000 SQ.FT. XMRP = 1339.9000 IN.XC
LREF = 327.7800 IN. YMRP = .0000 IN.YC
BREF = 2348.0400 IN. ZMRP = 190.8000 IN.ZC
SCALE = .0300

PARAMETRIC DATA

ALPHAC = .000 BETAC = .000
ELV-IB = .000 ELV-OB = 3.000
ELEVON = 5.000 MACH = .600
BETAO = .000 PHI = .000
DX = .000 DY = .000

RUN NO. 627/ 0 RN/L = 3.23 GRADIENT INTERVAL = -1.00/ 4.00

ALPHAO	DZ	MACH	DX	DY	BETAO	PHI	ALPHAW	BETA	CY	CLN	CSL
8.542	.714	.59990	3.63520	-.02480	.01080	.00000	2.00160	.04680	-.00630	.00000	.00080
8.528	3.692	.59920	3.63100	-.02090	.00950	.00000	2.00010	.05430	-.00660	.00030	.00090
8.518	8.066	.59980	3.63410	-.01440	.00730	.00000	1.99340	.04570	-.00810	.00130	.00070
8.507	15.605	.59930	3.63780	-.01330	.00490	.00000	1.98550	.05310	-.00840	.00170	.00060
8.501	30.694	.59970	3.64610	-.00330	-.00020	.00000	1.97170	.04490	-.00930	.00220	.00040
8.499	36.458	.60080	3.64900	-.00250	-.00040	.00000	1.96870	.04470	-.00970	.00240	.00030
	GRADIENT	-.00024	-.00141	.00131	-.00044	.00000	-.00050	.00252	-.00010	.00010	.00003

CA20 747/1 01 SI AT38 AT39 CARRIER DATA (AGN046) (01 DEC 75)

REFERENCE DATA

SREF = 5500.0000 SQ.FT. XMRP = 1339.9000 IN.XC
LREF = 327.7800 IN. YMRP = .0000 IN.YC
BREF = 2348.0400 IN. ZMRP = 190.8000 IN.ZC
SCALE = .0300

PARAMETRIC DATA

ALPHAC =	4.000	BETAC =	.000
ELV-IB =	.000	ELV-OB =	3.000
ELEVON =	5.000	MACH =	.600
BETAO =	.000	PHI =	.000
DX =	.000	DY =	.000

RUN NO. 625/ 0 RN/L = 3.33 GRADIENT INTERVAL = -1.00/ 4.00

ALPHAO	DZ	MACH	DX	DY	BETAO	PHI	ALPHAW	BETA	CY	CLN	CSL
12.932	1.832	.60070	-.18360	-.02470	.00710	.00000	5.90010	.05470	-.00610	-.00010	.00040
12.928	4.902	.60050	-.39970	-.02410	.00510	.00000	5.89670	.05970	-.00670	.00040	.00030
12.919	9.333	.59970	-.70450	-.01890	.00490	.00000	5.89180	.04620	-.00760	.00090	.00020
12.922	16.287	.60010	-1.18040	-.01810	.00320	.00000	5.88020	.05340	-.00870	.00160	.00010
12.928	31.736	.59970	-2.24670	-.00760	-.00230	.00000	5.86670	.04510	-.00920	.00230	-.00030
12.931	46.536	.60010	-3.26590	-.00890	-.00240	.00000	5.85220	.06070	-.00920	.00220	-.00030
12.938	61.653	.59990	-4.32120	.00250	-.00900	.00000	5.84840	.05300	-.00900	.00210	-.00030
	GRADIENT	.00000	.00000	.00000	.00800	.00000	.00000	.00000	.00000	.00000	.00000

CA20 747/1 01 SI AT38 AT39 CARRIER DATA (AGN047) (01 DEC 75)

REFERENCE DATA

SREF = 5500.0000 SQ.FT. XMRP = 1339.9000 IN.XC
LREF = 327.7800 IN. YMRP = .0000 IN.YC
BREF = 2348.0400 IN. ZMRP = 190.8000 IN.ZC
SCALE = .0300

PARAMETRIC DATA

ALPHAC =	8.000	BETAC =	.000
ELV-IB =	.000	ELV-OB =	3.000
ELEVON =	5.000	MACH =	.600
BETAO =	.000	PHI =	.000
DX =	.000	DY =	.000

RUN NO. 626/ 0 RN/L = 3.25 GRADIENT INTERVAL = -1.00/ 4.00

ALPHAO	DZ	MACH	DX	DY	BETAO	PHI	ALPHAW	BETA	CY	CLN	CSL
16.841	.924	.60020	-2.09540	-.01670	.00380	.00000	9.78520	.04000	-.00970	.00060	.00010
16.843	3.722	.60080	-2.48890	-.01030	.00240	.00000	9.78090	.03220	-.00950	.00090	.00000
16.845	8.201	.60030	-3.10370	-.00870	.00200	.00000	9.77510	.04060	-.00880	.00040	-.00010
16.850	15.692	.59940	-4.13510	-.00210	-.00030	.00000	9.76470	.04690	-.01120	.00210	-.00040
16.865	30.700	.59990	-6.20900	.00960	-.00430	.00000	9.74940	.04650	-.01220	.00290	-.00070
16.875	45.718	.59990	-8.29310	.01440	-.00560	.00000	9.73700	.04670	-.01180	.00280	-.00090
16.891	61.155	.59980	-10.44360	.02570	-.01250	.00000	9.72920	.05480	-.01140	.00250	-.00110
16.891	67.897	.59990	-11.37640	.03360	-.01550	.00000	9.72220	.04720	-.01120	.00250	-.00120
16.891	75.245	.60070	-12.40820	.03680	-.01600	.00000	9.72200	.04730	-.01110	.00250	-.00130
	GRADIENT	.00021	-.14054	.00229	-.00050	.00000	-.00154	-.00279	.00007	.00011	-.00004

ORIGINAL PAGE IS OF POOR QUALITY

CA20 747/1 01 S1 AT38 AT39 CARRIER DATA (AGN048) (01 DEC 75)

REFERENCE DATA

SREF = 5500.0000 SQ.FT. XMRP = 1339.9000 IN.XC
LREF = 327.7800 IN. YMRP = .0000 IN.YC
BREF = 2348.0400 IN. ZMRP = 190.8000 IN.ZC
SCALE = .0300

PARAMETRIC DATA

ALPHAC = 4.000 BETAC = -5.000
ELV-IB = .000 ELV-OB = 3.000
ELEVON = 5.000 MACH = .600
BETAO = -5.000 PHI = .000
DX = .000 DY = .000

RUN NO. 624/ 0 RN/L = 3.34 GRADIENT INTERVAL = -1.00/ 4.00

ALPHAO	DZ	MACH	DX	DY	BETAO	PHI	ALPHAW	BETA	CY	CLN	CSL
12.701	.950	.60050	-.09170	1.42280	-5.22730	.00000	5.89270	-4.97770	.09950	-.01630	.01190
12.694	4.036	.60000	-.31050	1.41650	-5.23070	.00000	5.88430	-4.97960	.10640	-.02260	.01310
12.674	8.306	.59970	-.60550	1.43390	-5.23660	.00000	5.88040	-4.97320	.09970	-.02090	.01340
12.674	15.805	.59980	-1.11840	1.46120	-5.24530	.00000	5.86640	-4.98130	.09700	-.02040	.01370
12.678	30.896	.59900	-2.16020	1.48350	-5.25690	.00000	5.85530	-4.96770	.09170	-.01820	.01340
12.690	45.974	.59940	-3.19910	1.49390	-5.25830	.00000	5.84400	-4.97330	.09510	-.02050	.01400
12.692	60.226	.60090	-4.16950	1.50010	-5.26240	.00000	5.83610	-4.97300	.09480	-.02080	.01420
	GRADIENT	.00000	.00000	.00000	.00000	.00000	.00000	.00000	.00000	.00000	.00000

CA20 747/1 01 S1 CARRIER DATA (AGN049) (01 DEC 75)

REFERENCE DATA

SREF = 5500.0000 SQ.FT. XMRP = 1339.9000 IN.XC
LREF = 327.7800 IN. YMRP = .0000 IN.YC
BREF = 2348.0400 IN. ZMRP = 190.8000 IN.ZC
SCALE = .0300

PARAMETRIC DATA

ALPHAC = .000 BETAC = .000
ELV-IB = .000 ELV-OB = 3.000
ELEVON = 5.000 MACH = .600
BETAO = .000 PHI = .000
DX = .000 DY = .000

RUN NO. 631/ 0 RN/L = 3.24 GRADIENT INTERVAL = .00/ 12.00

ALPHAO	DZ	MACH	DX	DY	BETAO	PHI	ALPHAW	BETA	CY	CLN	CSL
6.312	-1.419	.59920	5.29790	-.02660	.01260	.00000	1.99210	.05430	-.00630	.00010	.00100
6.292	1.465	.59920	5.30150	-.02450	.01160	.00000	1.98020	.06190	-.00580	.00020	.00100
6.279	6.074	.59910	5.30320	-.02630	.00980	.00000	1.97970	.04600	-.00600	.00060	.00080
6.271	13.645	.59920	5.30920	-.01460	.00610	.00000	1.97080	.05290	-.00760	.00150	.00060
6.270	16.389	.59950	5.30430	-.01130	.00540	.00000	1.97780	.04510	-.00780	.00160	.00050
6.269	23.904	.60010	5.31460	-.00590	.00200	.00000	1.96400	.04490	-.00790	.00190	.00030
	GRADIENT	-.00002	.00037	.00178	-.00065	.00000	-.00011	-.00345	-.00004	.00009	-.00004

CA20 747/1 01 S1 CARRIER DATA (AGN0491 (01 DEC 75)

REFERENCE DATA

SREF = 5500.0000 SQ.FT. XMRP = 1339.9000 IN.XC
LREF = 327.7800 IN. YMRP = .0000 IN.YC
BREF = 2348.0400 IN. ZMRP = 190.8000 IN.ZC
SCALE = .0300

PARAMETRIC DATA

ALPHAC =	.000	BETAC =	.000
ELV-IB =	.000	ELV-OB =	3.000
ELEVON =	5.000	MACH =	.600
BETAD =	.000	PHI =	.000
DX =	.000	DY =	.000

RUN NO. 628/ 0 RN/L = 3.29 GRADIENT INTERVAL = .00/ 12.00

ALPHAO	DZ	MACH	DX	DY	BETAO	PHI	ALPHAW	BETA	CY	CLN	CSL
10.637	1.272	.59950	2.52450	-.01930	.00730	.00000	2.01030	.04640	-.00600	-.00020	.00100
10.614	3.993	.59910	2.52480	-.01980	.00740	.00000	2.00740	.05410	-.00600	.00000	.00090
10.601	6.941	.59970	2.52560	-.01370	.00630	.00000	2.00440	.03840	-.00580	.00020	.00070
10.592	9.629	.59960	2.52630	-.01580	.00590	.00000	2.00010	.04560	-.00590	.00090	.00070
10.583	15.194	.60070	2.52960	-.01470	.00410	.00000	1.99100	.05300	-.00730	.00130	.00070
10.585	20.698	.60030	2.53050	-.01350	.00330	.00000	1.97990	.05250	-.00860	.00190	.00030
10.582	26.325	.60090	2.53340	-.00670	.00030	.00000	1.97440	.04490	-.00780	.00180	.00040
10.566	31.999	.59990	2.53780	-.00630	-.00040	.00000	1.97230	.05230	-.00860	.00210	.00010
10.560	37.416	.59910	2.53880	-.00650	.00000	.00000	1.96870	.05230	-.00860	.00210	.00010
10.561	42.935	.60070	2.54520	-.00450	-.00050	.00000	1.96310	.05230	-.00850	.00220	.00010
10.566	48.066	.59910	2.53990	-.00120	-.00220	.00000	1.96090	.04440	-.00920	.00240	.00000
	GRADIENT	.00003	.00[illegible]	.00060	-.00019	.00000	-.00120	-.00068	-.00009	.00012	-.00004

RUN NO. [illegible] RN/L = 3.25 GRADIENT INTERVAL = .00/ 12.00

ALPHAO	DZ	MACH	DX	DY	BETAO	PHI	ALPHAW	BETA	CY	CLN	CSL
14.838	3.701	.59910	1.51970	.00250	.00170	.00000	2.03660	.03910	-.00420	-.00080	.00070
14.820	6.608	.59920	1.51440	.00350	.00140	.00000	2.03470	.04660	-.00470	-.00040	.00070
14.798	11.326	.60080	1.51090	.00280	.00070	.00000	2.02900	.05400	-.00500	.00000	.00060
14.777	18.752	.59910	1.50530	.00610	-.00130	.00000	2.01470	.04590	-.00570	.00050	.00060
14.759	33.074	.59940	1.50510	.01100	-.00330	.00000	1.99380	.04480	-.00740	.00170	.00040
14.751	48.459	.60030	1.51130	.01550	-.00540	.00000	1.97740	.04440	-.00840	.00230	.00020
14.740	63.690	.60090	1.51010	.02740	-.01460	.00000	1.97150	.04430	-.00880	.00250	.00010
	GRADIENT	.00023	-.00111	.00002	-.00013	.00000	-.00102	.00192	-.00010	.00010	-.00001

CA20 747/1 01 S1 CARRIER DATA (AGN050) (01 DEC 75)

REFERENCE DATA

SREF = 5500.0000 SQ.FT. XMRP = 1339.9000 IN.XC
LREF = 327.7800 IN. YMRP = .0000 IN.YC
BREF = 2348.0400 IN. ZMRP = 190.8000 IN.ZC
SCALE = .0300

PARAMETRIC DATA

ALPHAC =	.000	BETAC =	.000
ELV-IB =	.000	ELV-OB =	3.000
ELEVON =	5.000	MACH =	.600
BETAO =	.000	PHI =	.000
DX =	10.000	DY =	.000

RUN NO. 636/ 0 RN/L = 3.25 GRADIENT INTERVAL = .00/ 12.00

ALPHAO	DZ	MACH	DX	DY	BETAO	PHI	ALPHAW	BETA	CY	CLN	CSL
6.250	.172	.60020	15.27190	-.03320	.01450	.00000	1.97000	.05470	-.00540	-.00010	.00090
6.243	3.541	.59960	15.27150	-.02910	.01190	.00000	1.97180	.05450	-.00510	.00010	.00090
6.236	7.711	.59990	15.27720	-.02610	.01060	.00000	1.96950	.05260	-.00700	.00110	.00060
6.238	15.213	.60070	15.28380	-.02330	.00880	.00000	1.96200	.05380	-.00690	.00130	.00070
6.237	18.591	.59920	15.28410	-.02260	.00730	.00000	1.96290	.05310	-.00780	.00170	.00040
6.238	24.078	.59920	15.28710	-.02100	.00520	.00000	1.95020	.05300	-.00790	.00180	.00040
	GRADIENT	-.00004	.00073	.00093	-.00051	.00000	-.00009	-.00015	-.00022	.00016	-.00004

RUN NO. 637/ 0 RN/L = 3.24 GRADIENT INTERVAL = .00/ 12.00

ALPHAO	DZ	MACH	DX	DY	BETAO	PHI	ALPHAW	BETA	CY	CLN	CSL
10.523	2.219	.59910	12.46630	-.02510	.00710	.00000	1.99530	.05490	-.00400	-.00070	.00100
10.508	5.391	.59950	12.46980	-.01920	.00660	.00000	1.99520	.04680	-.00490	-.00020	.00060
10.498	9.749	.60000	12.47340	-.01890	.00600	.00000	1.99040	.04620	-.00600	.00060	.00095
10.491	17.197	.59960	12.47830	-.01460	.00350	.00000	1.98140	.04560	-.00660	.00130	.00070
10.487	32.470	.59980	12.48740	-.01260	.00010	.00000	1.98940	.05270	-.00790	.00210	.00040
10.486	39.016	.60020	12.49080	-.01300	.00090	.00000	1.96590	.05260	-.00850	.00220	.00030
10.484	47.280	.59980	12.49400	-.00650	-.00130	.00000	1.98280	.04470	-.00870	.00240	.00030
	GRADIENT	.00012	.00054	.00078	-.00015	.00000	-.00080	-.00109	-.00026	.00017	-.00002

RUN NO. 638/ 0 RN/L = 3.23 GRADIENT INTERVAL = .00/ 12.00

ALPHAO	DZ	MACH	DX	DY	BETAO	PHI	ALPHAW	BETA	CY	CLN	CSL
14.710	4.989	.60030	11.34780	-.00530	.00200	.00000	2.02580	.04720	-.00310	-.00090	.00120
14.694	8.249	.59990	11.34880	-.00530	.00170	.00000	2.02180	.04740	-.00270	-.00100	.00120
14.680	12.695	.60070	11.35090	-.00840	.00150	.00000	2.01540	.05400	-.00480	.00020	.00100
14.671	20.170	.60000	11.35310	-.00460	-.00080	.00000	2.00340	.05400	-.00480	.00040	.00050
14.655	35.008	.59900	11.36060	-.00440	-.00170	.00000	1.98500	.05070	-.00660	.00160	.00050
14.656	50.142	.59980	11.36550	.00210	-.00530	.00000	1.97450	.05240	-.00780	.00230	.00040
14.648	64.911	.60050	11.37090	.01860	-.01370	.00000	1.96780	.04470	-.00780	.00230	.00040
	GRADIENT	-.00012	.00031	.00000	-.00009	.00000	-.00123	.00006	.00012	-.00003	.00000

ORIGINAL PAGE IS
OF POOR QUALITY

CA20 747/1 01 S1 CARRIER DATA (AGN051) (01 DEC 75)

REFERENCE DATA

SREF = 5500.0000 SQ.FT. XMRP = 1339.9000 IN.XC
LREF = 327.7800 IN. YMRP = .0000 IN.YC
BREF = 2348.0400 IN. ZMRP = 190.8000 IN.ZC
SCALE = .0300

PARAMETRIC DATA

ALPHAC = .000 BETAC = .000
ELV-IB = .000 ELV-OB = 3.000
ELEVON = 5.000 MACH = .600
BETAO = .000 PHI = .000
DX = 20.000 DY = .000

RUN NO. 641/ 0 RN/L = 3.24 GRADIENT INTERVAL = .00/ 12.00

ALPHAO	DZ	MACH	DX	DY	BETAO	PHI	ALPHAW	BETA	CY	CLN	CSL
6.190	8.425	.59990	25.24210	-.02560	.00940	.00000	1.96160	.05390	-.00530	.00050	.00070
6.192	11.568	.59910	25.24410	-.02540	.00880	.00000	1.96010	.05370	-.00610	.00080	.00060
6.193	16.022	.60000	25.25100	-.02440	.00710	.00000	1.95580	.05350	-.00640	.00100	.00060
6.197	23.561	.59930	25.25360	-.02090	.00460	.00000	1.95580	.05310	-.00720	.00140	.00030
	GRADIENT	-.00025	.00064	.00006	-.00019	.00000	-.00048	-.00006	-.00025	.00010	-.00003

RUN NO. 640/ 0 RN/L = 3.25 GRADIENT INTERVAL = .00/ 12.00

ALPHAO	DZ	MACH	DX	DY	BETAO	PHI	ALPHAW	BETA	CY	CLN	CSL
10.406	10.347	.59940	22.40780	-.01410	.00510	.00000	1.98200	.03850	-.00500	.00030	.00070
10.407	13.221	.60000	22.41020	-.02080	.00430	.00000	1.97910	.05390	-.00480	.00040	.00060
10.409	17.990	.59960	22.41380	-.01610	.00310	.00000	1.97280	.04580	-.00570	.00080	.00050
10.410	25.437	.59920	22.42090	-.02000	.00140	.00000	1.96540	.05280	-.00720	.00170	.00040
10.413	40.457	.59960	22.43270	-.00750	.00010	.00000	1.95580	.03700	-.00780	.00200	.00020
10.411	46.554	.59940	22.43050	-.01450	-.00050	.00000	1.95860	.05260	-.00730	.00190	.00030
	GRADIENT	.00000	.00000	.00000	.00000	.00000	.00000	.00000	.00000	.00000	.00000

RUN NO. 639/ 0 RN/L = 3.30 GRADIENT INTERVAL = .00/ 12.00

ALPHAO	DZ	MACH	DX	DY	BETAO	PHI	ALPHAW	BETA	CY	CLN	CSL
14.618	13.230	.59990	21.18160	-.01070	.00160	.00000	1.99890	.04660	-.00310	-.00030	.00090
14.617	16.279	.60030	21.18350	-.00400	.00160	.00000	1.99560	.03860	-.00430	.00010	.00070
14.616	20.672	.60080	21.18810	-.00640	.00000	.00000	1.99830	.04630	-.00440	.00020	.00070
14.614	28.161	.60090	21.19310	-.00210	-.00190	.00000	1.98090	.04560	-.00580	.00110	.00050
14.610	43.380	.60060	21.20220	-.00190	-.00220	.00000	1.97060	.04490	-.00720	.00190	.00030
14.607	59.256	.60000	21.20560	.00290	-.00690	.00000	1.96620	.04470	-.00760	.00220	.00020
14.604	69.990	.60040	21.21290	.01290	-.01260	.00000	1.96040	.04450	-.00820	.00230	.00000
	GRADIENT	.00000	.00000	.00000	.00000	.00000	.00000	.00000	.00000	.00000	.00000

CA20 747/1 01 SI CARRIER DATA (AGN052) (01 DEC 75)

REFERENCE DATA

SREF =	5500.0000 SQ.FT.	XMRP =	1339.9000 IN.XC		
LREF =	327.7800 IN.	YMRP =	.0000 IN.YC		
BREF =	2348.0400 IN.	ZMRP =	190.8000 IN.ZC		
SCALE =	.0300				

PARAMETRIC DATA

ALPHAC =	4.000	BETAC =	.000
ELV-IB =	.000	ELV-OB =	3.000
ELEVON =	5.000	MACH =	.600
BETAO =	.000	PHI =	.000
DX =	.000	DY =	.000

RUN NO. 632/ 0 RN/L = 3.24 GRADIENT INTERVAL = .00/ 12.00

ALPHAO	DZ	MACH	DX	DY	BETAO	PHI	ALPHAW	BETA	CY	CLN	CSL
6.161	-3.400	.60080	3.77560	-.02220	.01160	.00000	5.84160	.05500	-.00840	-.00010	.00050
6.159	-.517	.60060	3.57890	-.01780	.01220	.00000	5.84240	.04650	-.00840	.00060	.00030
6.166	3.831	.60030	3.28090	-.01630	.01030	.00000	5.83870	.04590	-.00900	.00130	.00020
6.178	11.707	.59960	2.74170	-.01420	.00790	.00000	5.83720	.05290	-.00980	.00210	.00000
6.203	24.148	.59980	1.88550	-.00670	.00240	.00000	5.83190	.04470	-.01040	.00250	-.00010
	GRADIENT	-.00009	-.06846	.00027	-.00030	.00000	-.00019	.00089	-.00010	.00010	-.00003

RUN NO. 646/ 0 RN/L = 3.24 GRADIENT INTERVAL = .00/ 12.00

ALPHAO	DZ	MACH	DX	DY	BETAO	PHI	ALPHAW	BETA	CY	CLN	CSL
10.487	1.556	.59980	.61590	-.01230	.00570	.00000	5.86740	.03910	-.00790	.00010	.00030
10.482	6.349	.60050	.31720	-.01200	.00600	.00000	5.86210	.04610	-.00890	.00100	.00010
10.480	13.746	.59930	-.18650	-.00960	.00400	.00000	5.85350	.04550	-.00940	.00160	.00000
10.493	29.253	.59900	-1.25310	-.00390	-.00130	.00000	5.84130	.05260	-.01050	.00230	-.00030
10.497	34.851	.59980	-1.63870	-.00460	-.00050	.00000	5.83810	.05250	-.01070	.00250	-.00040
10.501	44.044	.60010	-2.27250	-.00250	-.00050	.00000	5.83380	.04480	-.01060	.00250	-.00040
	GRADIENT	.00016	-.06799	.00007	-.00016	.00000	-.00121	.00159	-.00023	.00020	-.00005

RUN NO. 647/ 0 RN/L = 3.24 GRADIENT INTERVAL = .00/ 12.00

ALPHAO	DZ	MACH	DX	DY	BETAO	PHI	ALPHAW	BETA	CY	CLN	CSL
14.823	.973	.60090	-.34980	-.00900	.00130	.00000	5.90030	.03900	-.00760	-.00040	.00050
14.798	3.966	.59980	-.55680	-.00710	.00180	.00000	5.89710	.03920	-.00890	.00060	.00020
14.785	8.718	.60050	-.88540	-.00540	.00080	.00000	5.89000	.04570	-.00900	.00100	.00010
14.777	16.065	.60050	-1.39120	-.00360	-.00020	.00000	5.87650	.05360	-.00900	.00110	.00000
14.774	31.103	.60080	-2.42410	.00730	-.00390	.00000	5.85800	.04480	-.01040	.00240	-.00040
14.771	45.934	.59920	-3.45290	.00920	-.00550	.00000	5.84650	.05240	-.01050	.00250	-.00040
14.769	60.784	.59920	-4.47470	.02260	-.01350	.00000	5.83630	.04490	-.01000	.00230	-.00030
	GRADIENT	-.00003	-.05912	.00046	-.00008	.00000	-.00134	.00093	-.00017	.00017	-.00005

DATE 01 DEC 75 TABULATED SOURCE DATA - CA20

CA20 747/1 01 S1 CARRIER DATA (AGN053) (01 DEC 75)

REFERENCE DATA

SREF = 5500.0000 SQ.FT. XMRP = 1339.9000 IN.XC
LREF = 327.7800 IN. YMRP = .0000 IN.YC
BREF = 2348.0400 IN. ZMRP = 190.8000 IN.ZC
SCALE = .0300

PARAMETRIC DATA

ALPHAC =	4.000	BETAC =	.000
ELV-IB =	.000	ELV-OB =	3.000
ELEVON =	5.000	MACH =	.600
BETAO =	.000	PHI =	.000
DX =	10.000	DY =	.000

RUN NO. 635/ 0 RN/L = 3.27 GRADIENT INTERVAL = .00/ 12.00

ALPHAO	DZ	MACH	DX	DY	BETAO	PHI	ALPHAW	BETA	CY	CLN	CSL
6.127	-3.556	.60030	13.78940	-.02950	.01620	.00000	5.83520	.04740	-.00810	.00000	.00020
6.127	-.595	.60070	13.56720	-.03250	.01490	.00000	5.83590	.06250	-.00770	.00040	.00010
6.134	3.736	.60070	13.28050	-.03270	.01370	.00000	5.83540	.06170	-.00860	.00120	.00010
6.151	11.277	.60010	12.77230	-.02220	.01110	.00000	5.83280	.04570	-.00930	.00180	-.00010
6.169	17.788	.60020	12.32180	-.01940	.00890	.00000	5.83040	.04560	-.00950	.00190	-.00010
	GRADIENT	-.00008	-.06872	.00139	-.00034	.00000	-.00034	-.00212	-.00009	.00008	-.00003

RUN NO. 694/ 0 RN/L = 3.23 GRADIENT INTERVAL = .00/ 12.00

ALPHAO	DZ	MACH	DX	DY	BETAO	PHI	ALPHAW	BETA	CY	CLN	CSL
10.448	-1.201	.60020	10.79470	-.01680	.01530	.00000	5.84020	.00060	-.00870	.00000	.00040
10.431	1.842	.60020	10.59270	-.01490	.01460	.00000	5.84070	-.00010	-.00960	.00080	.00020
10.432	6.408	.60090	10.28290	-.00960	.01300	.00000	5.83720	-.00860	-.01060	.00180	.00000
10.436	13.966	.59990	9.77130	-.01040	.01100	.00000	5.82810	-.00150	-.01120	.00250	-.00030
10.455	28.936	.60060	8.74770	-.00770	.00610	.00000	5.82040	.00580	-.01200	.00290	-.00040
10.476	43.999	.60000	7.70840	-.00180	.00500	.00000	5.81390	-.00170	-.01110	.00280	-.00040
10.477	48.276	.60010	7.41470	-.00160	.00420	.00000	5.81240	-.00180	-.01130	.00280	-.00050
	GRADIENT	.00015	-.06785	.00116	-.00035	.00000	-.00077	-.00186	-.00022	.00022	-.00004

RUN NO. 693/ 0 RN/L = 3.23 GRADIENT INTERVAL = .00/ 12.00

ALPHAO	DZ	MACH	DX	DY	BETAO	PHI	ALPHAW	BETA	CY	CLN	CSL
14.751	1.086	.60030	9.51270	-.01800	.00830	.00000	5.86930	-.00710	-.00720	-.00050	.00060
14.731	4.167	.59960	9.30440	-.01580	.00800	.00000	5.86720	-.00830	-.00920	.00080	.00020
14.724	8.638	.60010	9.00320	-.01780	.00750	.00000	5.85940	-.00090	-.00960	.00140	.00010
14.722	16.335	.60040	8.47860	-.01790	.00650	.00000	5.85020	.00610	-.01110	.00240	-.00010
14.722	31.320	.59960	7.45320	-.00050	.00300	.00000	5.83490	-.00200	-.01160	.00290	-.00040
14.727	46.516	.60010	6.40990	-.00130	.00270	.00000	5.82450	.00580	-.01120	.00280	-.00040
14.727	61.207	.59940	5.39790	.01430	-.00580	.00000	5.81820	-.00200	-.01170	.00300	-.00040
	GRADIENT	-.00002	-.06746	-.00001	-.00011	.00000	-.00122	.00088	-.00030	.00024	-.00006

CA20 747/1 01 S1 CARRIER DATA (AOH0541 (01 DEC 75)

REFERENCE DATA

SREF =	5500.0000 SQ.FT.	XMRP =	1339.9000 IN.XC		
LREF =	327.7800 IN.	YMRP =	.0000 IN.YC		
BREF =	2348.0400 IN.	ZMRP =	190.8000 IN.ZC		
SCALE =	.0300				

PARAMETRIC DATA

ALPHAC =	4.000	BETAC =	.000
ELV-IB =	.000	ELV-OB =	3.000
ELEVON =	5.000	MACH =	.600
BETAO =	.000	PHI =	.000
DX =	20.000	DY =	.000

RUN NO. 642/ 0 RN/L = 3.22 GRADIENT INTERVAL = .00/ 12.00

ALPHAO	DZ	MACH	DX	DY	BETAO	PHI	ALPHAW	BETA	CY	CLN	CSL
6.093	2.348	.59910	23.37960	-.02250	.01360	.00000	5.83400	.04650	-.00810	.00060	.00010
6.103	5.577	.59930	23.15510	-.02620	.01220	.00000	5.83120	.05400	-.00830	.00090	.00000
6.111	9.879	.59920	22.86210	-.02590	.01070	.00000	5.83040	.05370	-.00850	.00120	.00000
6.132	17.481	.59960	22.33520	-.01930	.00820	.00000	5.82870	.04560	-.00900	.00170	-.00010
6.145	25.660	.59980	21.75890	-.02230	.00550	.00000	5.82680	.05300	-.00970	.00200	-.00020
	GRADIENT	.00001	-.06870	-.00042	-.00039	.00000	-.00046	.00090	-.00005	.00008	-.00001

RUN NO. 677/ 0 RN/L = 3.28 GRADIENT INTERVAL = .00/ 12.00

ALPHAO	DZ	MACH	DX	DY	BETAO	PHI	ALPHAW	BETA	CY	CLN	CSL
10.302	4.428	.59980	20.39070	.00180	.01220	.00000	5.65300	-.00890	-.01060	.00180	-.00010
10.309	7.493	.60020	20.18050	.00640	.01130	.00000	5.64870	-.01700	-.01110	.00220	-.00030
10.316	11.949	.59990	19.87580	.01160	.01040	.00000	5.64590	-.02500	-.01170	.00260	-.00030
10.338	19.513	.59990	19.35470	.00820	.00760	.00000	5.83300	-.01750	-.01170	.00280	-.00040
10.357	34.554	.60000	18.31350	.00950	.00490	.00000	5.83680	-.00990	-.01180	.00300	-.00060
10.367	48.107	.60030	17.37700	.01200	.00310	.00000	5.83240	-.00970	-.01100	.00280	-.00040
	GRADIENT	.00001	-.06946	.00129	-.00024	.00000	-.00094	-.00212	-.00915	.00011	-.00002

RUN NO. 676/ 0 RN/L = 3.27 GRADIENT INTERVAL = .00/ 12.00

ALPHAO	DZ	MACH	DX	DY	BETAO	PHI	ALPHAW	BETA	CY	CLN	CSL
14.565	7.759	.59950	18.91230	-.00490	.00530	.00000	5.87200	-.00890	-.00980	.00150	.00010
14.565	10.920	.60050	18.69760	-.00170	.00500	.00000	5.87010	-.01700	-.01050	.00200	-.00010
14.575	15.111	.59950	18.40910	-.01090	.00430	.00000	5.86550	-.00210	-.01130	.00260	-.00020
14.571	22.922	.60080	17.87690	.00060	.00150	.00000	5.65810	-.01770	-.01150	.00290	-.00040
14.590	37.645	.59910	16.86160	.00120	.00210	.00000	5.64840	-.01000	-.01140	.00300	-.00050
14.589	52.832	.59920	15.81080	.01610	-.00130	.00000	5.64130	-.01000	-.01150	.00300	-.00060
14.705	68.281	.60040	14.72650	.03240	-.00970	.00000	5.83640	-.01740	-.01090	.00270	-.00050
	GRADIENT	.00032	-.06791	.00101	-.00009	.00000	-.00060	-.00256	-.00022	.00016	-.00006

CA20 747/1 01 S1 CARRIER DATA (AGN055) (01 DEC 75)

REFERENCE DATA

SREF = 5500.0000 SQ.FT. XMRP = 1339.9000 IN.XC
LREF = 327.7800 IN. YMRP = .0000 IN.YC
BREF = 2348.0400 IN. ZMRP = 190.8000 IN.ZC
SCALE = .0300

PARAMETRIC DATA

ALPHAC =	8.000	BETAC =	.000
ELV-1B =	.000	ELV-0B =	3.000
ELEVON =	5.000	MACH =	.600
BETAO =	.000	PHI =	.000
DX =	.000	DY =	.000

RUN NO. 633/ 0 RN/L = 3.23 GRADIENT INTERVAL = .00/ 12.00

ALPHAO	DZ	MACH	DX	DY	BETAO	PHI	ALPHAW	BETA	CY	CLN	CSL
5.939	-.987	.59920	1.93130	-.01440	.01090	.00000	9.71490	.04850	-.01100	.00120	-.00080
5.987	1.651	.59950	1.54240	-.01510	.00980	.00000	9.71670	.05590	-.01040	.00160	-.00080
6.027	6.647	.60070	.87960	-.01400	.00900	.00000	9.71750	.04770	-.01080	.00210	-.00090
6.074	14.133	.59940	-.15900	-.01320	.00770	.00000	9.71930	.05480	-.01160	.00270	-.00100
6.098	18.812	.60020	-.80660	-.01220	.00620	.00000	9.71600	.05470	-.01170	.00280	-.00100
6.122	24.109	.60050	-1.54470	-.00780	.00320	.00000	9.71780	.04700	-.01140	.00280	-.00100
	GRADIENT	.00025	-.13920	.00023	-.00017	.00000	.00017	-.00169	-.00008	.00010	-.00002

RUN NO. 645/ 0 RN/L = 3.25 GRADIENT INTERVAL = .00/ 12.00

ALPHAO	DZ	MACH	DX	DY	BETAO	PHI	ALPHAW	BETA	CY	CLN	CSL
10.299	-2.897	.59940	-.65080	-.01520	.00760	.00000	9.73420	.05720	-.01050	-.00020	-.00030
10.303	.285	.60020	-1.07800	-.01080	.00800	.00000	9.73240	.04110	-.00980	.00050	-.00050
10.323	4.651	.60030	-1.67400	-.01440	.00810	.00000	9.73030	.04770	-.01140	.00170	-.00070
10.355	12.183	.60030	-2.70650	-.01300	.00630	.00000	9.72660	.04680	-.01260	.00270	-.00080
10.431	27.416	.60060	-4.81880	-.00870	.00170	.00000	9.71950	.05430	-.01250	.00310	-.00100
10.459	42.295	.60050	-6.88330	-.00430	.00010	.00000	9.71470	.05450	-.01180	.00290	-.00110
10.464	47.714	.59970	-7.63700	-.00290	-.00120	.00000	9.71360	.05430	-.01270	.00320	-.00100
	GRADIENT	.00002	-.13650	-.00082	.00002	.00000	-.00048	.00151	-.00037	.00027	-.00005

RUN NO. 644/ 0 RN/L = 3.28 GRADIENT INTERVAL = .00/ 12.00

ALPHAO	DZ	MACH	DX	DY	BETAO	PHI	ALPHAW	BETA	CY	CLN	CSL
14.701	-.738	.60050	-2.01430	-.01310	.00390	.00000	9.76940	.04100	-.00980	-.00010	.00010
14.691	2.335	.60030	-2.43060	-.01170	.00370	.00000	9.76740	.03260	-.01090	.00070	-.00010
14.699	6.812	.60060	-3.04150	-.01650	.00270	.00000	9.76110	.03970	-.01120	.00150	-.00010
14.714	14.542	.59990	-4.10420	-.01810	.00100	.00000	9.75120	.04640	-.01270	.00270	-.00040
14.743	29.472	.60060	-6.16200	-.01050	-.00310	.00000	9.73740	.04590	-.01320	.00350	-.00090
14.754	44.335	.60010	-8.22650	-.00360	-.00260	.00000	9.72820	.05410	-.01230	.00310	-.00100
14.762	59.151	.60020	-10.28770	.01310	-.00990	.00000	9.72010	.04650	-.01210	.00310	-.00100
	GRADIENT	.00007	-.13645	-.00107	-.00022	.00000	-.00141	.00159	-.00007	.00018	.00000

CA20 747/1 01 S1 CARRIER DATA (AGN056) (01 DEC 75)

REFERENCE DATA

SREF =	5500.0000 SQ.FT.	XMRP =	1339.9000 IN.XC
LREF =	327.7800 IN.	YMRP =	.0000 IN.YC
BREF =	2348.0400 IN.	ZMRP =	190.8000 IN.ZC
SCALE =	.0300		

PARAMETRIC DATA

ALPHAC =	8.000	BETAC =	.000
ELV-IB =	.000	ELV-OB =	3.000
ELEVON =	5.000	MACH =	.600
BETAO =	.000	PHI =	.000
DX =	10.000	DY =	.000

RUN NO. 634/ 0 RN/L = 3.30 GRADIENT INTERVAL = .00/ 12.00

ALPHAO	DZ	MACH	DX	DY	BETAO	PHI	ALPHAH	BETA	CY	CLN	CSL
5.917	-2.155	.59920	12.18910	-.03110	.01740	.00000	9.71230	.05720	-.00900	.00040	-.00060
5.956	.903	.60070	11.76590	-.02850	.01660	.00000	9.71600	.04890	-.00910	.00100	-.00070
5.994	5.537	.59940	11.12250	-.02590	.01440	.00000	9.71450	.04800	-.01010	.00190	-.00090
6.038	12.684	.60000	10.12740	-.02420	.01290	.00000	9.71670	.04760	-.01100	.00260	-.00100
6.070	19.121	.59950	9.23370	-.02490	.01020	.00000	9.71600	.05510	-.01120	.00270	-.00090
6.098	25.727	.59960	8.31400	-.02300	.00700	.00000	9.71520	.05500	-.01130	.00280	-.00100
	GRADIENT	-.00028	-.13986	.00058	-.00047	.00000	-.00032	-.00019	-.00022	.00019	-.00004

RUN NO. 691/ 0 RN/L = 3.24 GRADIENT INTERVAL = .00/ 12.00

ALPHAO	DZ	MACH	DX	DY	BETAO	PHI	ALPHAH	BETA	CY	CLN	CSL
10.217	-2.770	.59940	9.39150	-.01990	.01790	.00000	9.73900	.01070	-.01010	.00020	.00030
10.225	.202	.60050	8.98730	-.01830	.01690	.00000	9.73760	.01010	-.01040	.00090	.00020
10.259	5.605	.60030	8.31960	-.01770	.01580	.00000	9.73910	.00890	-.01190	.00220	.00000
10.289	12.254	.60010	7.32340	-.01180	.01310	.00000	9.73430	.00070	-.01210	.00270	-.00010
10.356	27.323	.59960	5.23270	-.01300	.00800	.00000	9.72900	.01580	-.01300	.00320	-.00030
10.401	42.555	.59930	3.10590	-.00360	.00660	.00000	9.72690	.00060	-.01190	.00290	-.00010
10.410	48.530	.60030	2.27610	-.00620	.00600	.00000	9.72320	.00840	-.01200	.00290	-.00020
	GRADIENT	-.00004	-.13901	.00012	-.00023	.00000	.00031	-.00025	-.00031	.00027	-.00004

RUN NO. 692/ 0 RN/L = 3.23 GRADIENT INTERVAL = .00/ 12.00

ALPHAO	DZ	MACH	DX	DY	BETAO	PHI	ALPHAH	BETA	CY	CLN	CSL
14.599	-.266	.59960	7.66010	-.01000	.01200	.00000	9.76440	-.00560	-.01090	.00060	.00040
14.597	2.610	.59960	7.47010	-.01020	.01100	.00000	9.76290	-.00620	-.01150	.00130	.00030
14.613	7.478	.60000	6.80220	-.01470	.01070	.00000	9.76070	.00080	-.01220	.00210	.00010
14.633	14.672	.60030	5.81800	-.02120	.00930	.00000	9.75250	.00770	-.01340	.00310	-.00020
14.673	29.795	.60000	3.73130	-.01120	.00310	.00000	9.74240	-.00020	-.01350	.00350	-.00040
14.695	44.753	.59990	1.65330	-.01330	.00280	.00000	9.73500	.00790	-.01240	.00320	-.00030
14.712	59.602	.60090	-.41850	-.00080	-.00360	.00000	9.72990	.00820	-.01200	.00300	-.00020
	GRADIENT	.00008	-.13720	-.00092	-.00006	.00000	-.00045	.00144	-.00014	.00016	-.00004

CA20 747/1 01 SI CARRIER DATA (AGN057) (01 DEC 75)

REFERENCE DATA

SREF = 5500.0000 SQ.FT. XMRP = 1339.9000 IN.XC
LREF = 327.7806 IN. YMRP = .0000 IN.YC
BREF = 2348.0400 IN. ZMRP = 190.8000 IN.ZC
SCALE = .0300

PARAMETRIC DATA

ALPHAC =	8.000	BETAC =	.000
ELV-IB =	.000	ELV-OB =	3.000
ELEVON =	5.000	MACH =	.600
BETAO =	.000	PHI =	.000
DX =	20.000	DY =	.000

RUN NO. 643/ 0 RN/L = 3.22 GRADIENT INTERVAL = .00/ 12.00

ALPHAO	DZ	MACH	DX	DY	BETAO	PHI	ALPHAW	BETA	CY	CLN	CSL
5.918	-3.193	.60060	22.40390	-.02500	.01850	.00000	9.70870	.04980	-.00820	-.00030	-.00060
5.942	-.094	.60060	21.97440	-.02980	.01740	.00000	9.70850	.05680	-.00880	.00050	-.00080
5.973	4.408	.60010	21.34670	-.02910	.01520	.00000	9.70990	.05610	-.00950	.00130	-.00090
6.011	11.874	.60030	20.31020	-.02640	.01200	.00000	9.70930	.05540	-.01040	.00200	-.00090
6.079	26.802	.60020	18.22690	-.01920	.00740	.00000	9.71150	.04720	-.01140	.00270	-.00090
	GRADIENT	.00003	-.13683	.00036	-.00043	.00000	.00009	-.00009	-.00008	.00003	.00000

RUN NO. 674/ 0 RN/L = 3.27 GRADIENT INTERVAL = .00/ 12.00

ALPHAO	DZ	MACH	DX	DY	BETAO	PHI	ALPHAW	BETA	CY	CLN	CSL
10.226	-1.405	.59990	19.22120	.00080	.01770	.00000	9.73920	-.00550	-.01040	.00080	.00000
10.235	1.641	.60060	18.80350	.00330	.01660	.00000	9.73750	-.01420	-.01170	.00180	-.00010
10.253	6.023	.60050	18.19850	.00170	.01390	.00000	9.73650	-.00710	-.01250	.00260	-.00030
10.290	13.703	.60070	17.13510	.00620	.01250	.00000	9.73300	-.01530	-.01310	.00310	-.00040
10.351	28.615	.59970	15.05930	.00700	.00660	.00000	9.73110	-.00770	-.01330	.00330	-.00040
10.395	43.888	.60080	12.92800	.00900	.00590	.00000	9.72550	-.00750	-.01240	.00320	-.00030
10.403	49.633	.59980	12.11970	.00900	.00450	.00000	9.72910	-.00730	-.01190	.00300	-.00030
	GRADIENT	-.00002	-.13809	-.00037	-.00062	.00000	-.00023	.00162	-.00018	.00018	-.00005

RUN NO. 675/ 0 RN/L = 3.27 GRADIENT INTERVAL = .00/ 12.00

ALPHAO	DZ	MACH	DX	DY	BETAO	PHI	ALPHAW	BETA	CY	CLN	CSL
14.444	1.517	.60060	17.56580	.01060	.01100	.00000	9.75870	-.02180	-.01090	.00130	.00010
14.457	4.549	.59950	17.14950	.00580	.00970	.00000	9.75720	-.01490	-.01220	.00220	.00000
14.478	9.043	.59980	16.53140	-.00060	.00910	.00000	9.75430	-.00770	-.01280	.00280	.00000
14.497	16.873	.60010	15.45500	.00340	.00540	.00000	9.74680	-.01590	-.01350	.00340	-.00020
14.563	31.919	.59990	13.35970	.00580	.00150	.00000	9.73960	-.01590	-.01360	.00360	-.00040
14.607	46.722	.60090	11.30630	-.00570	.00080	.00000	9.73640	-.00030	-.01300	.00350	-.00030
14.699	82.461	.59960	9.09770	.00820	-.00670	.00000	9.73250	-.00770	-.01250	.00330	-.00030
	GRADIENT	-.00009	-.13746	-.00148	-.00024	.00000	-.00059	.00185	-.00026	.00019	-.00001

ORIGINAL PAGE IS OF POOR QUALITY

CA20 747/1 01 S1 CARRIER DATA (AGN058) (01 DEC 75)

REFERENCE DATA

SREF =	5500.0000 SQ.FT.	XMRP =	1339.9000 IN.XC
LREF =	327.7800 IN.	YMRP =	.0000 IN.YC
BREF =	2348.0400 IN.	ZMRP =	180.8000 IN.ZC
SCALE =	.0300		

PARAMETRIC DATA

ALPHAC =	4.000	BETAC =	.000
ELV-IB =	.000	ELV-OB =	3.000
ELEVON =	5.000	MACH =	.600
BETAO =	.000	PHI =	.000
DX =	.000	DY =	10.000

RUN NO. 775/ 0 RN/L = 3.33 GRADIENT INTERVAL = .00/ 12.00

ALPHAO	DZ	MACH	DX	DY	BETAO	PHI	ALPHAH	BETA	CY	CLN	CSL
10.535	-1.419	.60030	.85680	9.98100	.02160	.00000	5.83050	.01560	-.01770	-.00740	.00960
10.528	1.326	.60030	.67100	9.97800	.02320	.00000	5.82840	.02110	-.01730	-.00510	.00800
10.524	5.838	.60070	.36640	9.97700	.02290	.00000	5.81890	.00970	-.01980	-.00110	.00610
10.524	13.085	.59950	-.12830	9.97800	.01910	.00000	5.81440	.00650	-.02140	.00220	.00430
10.538	28.455	.60020	-1.17810	9.98970	.00690	.00000	5.80330	.01060	-.02310	.00610	.00210
10.542	43.191	.60090	-2.18280	10.00100	-.00020	.00000	5.79600	.01030	-.02060	.00640	.00080
10.542	47.091	.60080	-2.45280	10.00520	-.00310	.00000	5.79670	.01100	-.01870	.00560	.00070
	GRADIENT	.00009	-.06751	-.00022	-.00007	.00000	-.00211	-.00253	-.00055	.00089	-.00042

RUN NO. 781/ 0 RN/L = 3.22 GRADIENT INTERVAL = .00/ 12.00

ALPHAO	DZ	MACH	DX	DY	BETAO	PHI	ALPHAH	BETA	CY	CLN	CSL
14.865	1.432	.60080	-.35660	9.94370	.01800	.00000	5.86870	.02570	-.02610	-.01020	.01450
14.849	5.001	.60000	-.60690	9.94940	.02110	.00000	5.86360	.02250	-.02300	-.00690	.01240
14.843	8.690	.60050	-.87520	9.95810	.02080	.00000	5.85720	.00920	-.02810	-.00080	.00960
14.834	16.716	.60050	-1.41420	9.95810	.01550	.00000	5.84460	.01190	-.03060	.00470	.00620
14.831	29.965	.60070	-2.32080	9.98930	.00570	.00000	5.82750	-.00030	-.03210	.00950	.00290
14.830	31.354	.60040	-2.41560	9.98990	.00430	.00000	5.82630	.00740	-.03160	.00950	.00260
14.828	46.543	.60000	-3.46170	10.00590	-.00210	.00000	5.81770	.00830	-.02630	.00860	.00130
14.820	61.677	.59960	-4.50100	10.02160	-.01260	.00000	5.80820	.01030	-.02030	.00630	.00070
	GRADIENT	-.00004	-.06953	.00166	.00037	.00000	-.00154	-.00223	-.00028	.00127	-.00066

CA20 747/1 01 S1 CARRIER DATA (AGN059) (01 DEC 75)

REFERENCE DATA

SREF = 5500.0000 SQ.FT. XMRP = 1339.9000 IN.XC
LREF = 327.7800 IN. YMRP = .0000 IN.YC
BREF = 2348.0400 IN. ZMRP = 190.8000 IN.ZC
SCALE = .0300

PARAMETRIC DATA

ALPHAC =	4.000	BETAC =	.000
ELV-IB =	.000	ELV-OB =	3.000
ELEVCN =	5.000	MACH =	.600
BETAO =	.000	PHI =	.000
DX =	10.000	DY =	10.000

RUN NO. 735/ 0 RN/L = 3.31 GRADIENT INTERVAL = .00/ 12.00

ALPHAO	DZ	MACH	DX	DY	BETAO	PHI	ALPHAW	BETA	CY	CLN	CSL
10.410	-2.369	.59950	10.89070	9.99070	.02220	.00000	5.66010	.00060	-.01210	-.00320	.00800
10.404	1.142	.60030	10.65090	9.99750	.02500	.00000	5.66050	.00500	-.01220	-.00560	.00650
10.407	5.650	.60010	10.34040	9.99660	.02370	.00000	5.66670	-.00520	-.01540	-.00180	.00500
10.424	13.193	.60040	9.81870	9.99860	.01890	.00000	5.65130	-.00840	-.01810	.00160	.00360
10.437	27.955	.60000	8.80350	9.99570	.00820	.00000	5.64270	-.00450	-.02140	.00570	.00160
10.445	42.957	.59950	7.77080	10.00860	.00120	.00000	5.63450	-.01260	-.01960	.00610	.00040
10.450	46.957	.60000	7.49300	10.00900	-.00140	.00000	5.63280	-.00430	-.01810	.00550	.00040
	GRADIENT	-.00004	-.06688	-.00020	-.00029	.00000	-.00084	-.00248	-.00071	.00094	-.00033

RUN NO. 738/ 0 RN/L = 3.24 GRADIENT INTERVAL = .00/ 12.00

ALPHAO	DZ	MACH	DX	DY	BETAO	PHI	ALPHAW	BETA	CY	CLN	CSL
14.679	-.128	.60020	9.59730	9.97850	.01040	.00000	5.69440	-.00270	-.01320	-.01310	.01290
14.671	3.023	.60010	9.39060	9.97590	.01530	.00000	5.69080	-.00640	-.01410	-.00910	.01080
14.668	7.553	.60000	9.05900	9.97480	.01440	.00000	5.68650	-.00590	-.02330	-.00130	.00820
14.673	14.659	.60060	8.56540	9.98310	.01020	.00000	5.67810	-.01910	-.02830	.00470	.00540
14.673	30.066	.60000	7.51480	10.00810	.00090	.00000	5.65360	-.02340	-.03020	.00930	.00210
14.682	44.947	.60060	6.48600	10.02130	-.00590	.00000	5.65260	-.02250	-.02520	.00840	.00090
14.693	59.957	.60050	5.43820	10.03040	-.01380	.00000	5.65030	-.00499	-.01940	.00510	.00030
	GRADIENT	-.00002	-.06979	-.00024	-.00020	.00000	-.00095	.00011	-.00203	.00172	-.00057

CA20 747/1 01 S1 CARRIER DATA (AGH060) (01 DEC 75)

REFERENCE DATA

SREF =	5500.0000 SQ.FT.	XMRP =	1339.9000 IN.XC
LREF =	327.7800 IN.	YMRP =	.0000 IN.YC
BREF =	2348.0400 IN.	ZMRP =	190.8000 IN.ZC
SCALE =	.0300		

PARAMETRIC DATA

ALPHAC =	8.000	BETAC =	.000
ELV-IB =	.000	ELV-OB =	3.000
ELEVON =	5.000	MACH =	.600
BETAO =	.000	PHI =	.000
DX =	.000	DY =	10.000

RUN NO. 780/ 0 RN/L = 3.24 GRADIENT INTERVAL = .00/ 12.00

ALPHAO	DZ	MACH	DX	DY	BETAO	PHI	ALPHAH	BETA	CY	CLN	CSL
10.362	-1.757	.60010	-.78539	10.03920	.00620	.00000	9.67770	.00770	-.02270	-.00480	.00348
10.376	.812	.60050	-1.13020	10.01360	.01490	.00000	9.67470	.01270	-.02370	-.00190	.00290
10.393	5.122	.59910	-1.71630	9.99440	.02190	.00000	9.67280	.01040	-.02330	.00050	.00240
10.433	12.383	.60010	-2.71010	9.97970	.02480	.00000	9.67120	.00750	-.02400	.00360	.00170
10.490	27.851	.59950	-4.84220	9.98430	.01500	.00000	9.66450	.00390	-.02580	.00760	.00310
10.511	42.980	.59990	-6.92130	9.99200	.00710	.00000	9.65560	.00540	-.02020	.00590	-.00030
10.512	46.793	.59930	-7.44810	9.99030	.00520	.00000	9.65390	.02120	-.01920	.00560	-.00048
	GRADIENT	-.00032	-.13600	-.00446	.00162	.00000	-.00044	-.00053	.00009	.00056	-.00012

RUN NO. 787/ 0 RN/L = 3.18 GRADIENT INTERVAL = .00/ 12.00

ALPHAO	DZ	MACH	DX	DY	BETAO	PHI	ALPHAH	BETA	CY	CLN	CSL
14.755	.306	.60060	-2.12040	10.00190	.00500	.00000	9.69920	.02650	-.02910	-.00870	.01000
14.757	3.230	.59980	-2.51630	9.98410	.01160	.00000	9.69640	.02840	-.03290	-.00250	.00820
14.766	7.801	.60080	-3.13560	9.96970	.01720	.00000	9.69090	.02280	-.03630	.00350	.00670
14.743	15.148	.60010	-4.13630	9.96310	.01620	.00000	9.68370	.01890	-.03640	.00760	.00460
14.783	15.383	.60090	-4.17270	9.96030	.01690	.00000	9.68250	.01880	-.03650	.00780	.00470
14.805	30.352	.60060	-6.21870	9.96960	.00920	.00000	9.65770	.00970	-.03130	.00930	.00220
14.814	45.218	.60030	-8.27030	9.98620	.00220	.00000	9.66150	.01090	-.02570	.00810	.00070
14.814	60.205	.60010	-10.34390	10.00840	-.00810	.00000	9.65530	.02060	-.01960	.00600	.00010
	GRADIENT	.00004	-.13546	-.00420	.00159	.00000	-.00112	-.00056	-.00094	.00160	-.00043

ORIGINAL PAGE IS
OF POOR QUALITY

CA20 747/1 01 S1 CARRIER DATA (AGN061) (01 DEC 75)

REFERENCE DATA

SREF =	5500.0000 SQ.FT.	XMRP =	1339.9000 IN.XC		
LREF =	327.7800 IN.	YMRP =	.0000 IN.YC		
BREF =	2348.0400 IN.	ZMRP =	190.8000 IN.ZC		
SCALE =	.0300				

PARAMETRIC DATA

ALPHAC =	8.000	BETAC =	.000
ELV-IB =	.000	ELV-OB =	3.000
ELEVON =	5.000	MACH =	.600
BETAO =	.000	PHI =	.000
DX =	10.000	DY =	10.000

RUN NO. 736/ 0 RN/L = 3.27 GRADIENT INTERVAL = .00/ 12.00

ALPHAO	DZ	MACH	DX	DY	BETAO	PHI	ALPHAW	BETA	CY	CLN	CSL
10.233	-3.822	.59980	9.54280	10.05490	.00500	.00000	9.72970	-.00620	-.01740	-.00630	.00280
10.250	-.443	.59940	9.08310	10.02460	.01480	.00000	9.72840	-.00130	-.01780	-.00340	.00250
10.273	3.946	.60060	8.47950	10.00570	.02180	.00000	9.72760	-.00370	-.01830	-.00080	.00220
10.306	11.425	.59960	7.44950	9.99240	.02410	.00000	9.72280	-.00650	-.01970	.00220	.00160
10.370	28.395	.59930	5.38680	9.99710	.01400	.00000	9.72660	-.01060	-.02330	.00550	.00040
10.405	41.249	.60010	3.30380	10.00370	.00630	.00000	9.71690	-.00950	-.01920	.00540	-.00010
10.417	47.343	.60010	2.45280	10.00480	.00340	.00000	9.71510	-.00120	-.01720	.00480	-.00020
	GRADIENT	-.00013	-.13771	-.00191	.00031	.00000	-.00053	-.00037	-.00012	.00040	-.00008

RUN NO. 737/ 0 RN/L = 3.24 GRADIENT INTERVAL = .00/ 12.0

ALPHAO	DZ	MACH	DX	DY	BETAO	PHI	ALPHAW	BETA	CY	CLN	CSL
14.551	-1.912	.59960	8.11220	10.04110	.00360	.00000	9.75230	-.01040	-.02070	-.01050	.00800
14.559	1.350	.60000	7.66280	10.02940	.01050	.00000	9.75390	-.00860	-.02540	-.00420	.00650
14.571	5.795	.59930	7.05740	10.00480	.01380	.00000	9.74870	.00140	-.03040	.00170	.00540
14.596	13.276	.59950	6.02790	9.99330	.01360	.00000	9.74290	-.01120	-.03380	.00700	.00370
14.628	27.980	.60090	3.99750	9.99600	.00470	.00000	9.73330	-.02110	-.03130	.00930	.00170
14.652	43.114	.60090	1.69710	9.99740	-.00080	.00000	9.72630	-.01210	-.02920	.00880	.00060
14.659	57.868	.60010	-.16040	10.01600	-.01010	.00000	9.72200	-.00990	-.01930	.00570	.00020
	GRADIENT	-.00016	-.13693	-.00553	.00074	.00000	-.00117	.00225	-.00112	.00133	-.00025

CA20 747/1 01 S1 CARRIER DATA (AGN062) (01 DEC 75)

REFERENCE DATA

SREF =	5500.0000 SQ.FT.	XMRP =	1339.9000 IN.XC		
LREF =	327.7800 IN.	YMRP =	.0000 IN.YC		
BREF =	2348.0400 IN.	ZMRP =	190.8000 IN.ZC		
SCALE =	.0300				

PARAMETRIC DATA

ALPHAC =	4.000	BETAC =	-5.000
ELV-IB =	.000	ELV-OB =	3.000
ELEVON =	5.000	MACH =	.600
BETAO =	.000	PHI =	.000
DX =	.000	DY =	.000

RUN NO. 649/ 0 RN/L = 3.23 GRADIENT INTERVAL = .00/ 12.00

ALPHAO	DZ	MACH	DX	DY	BETAO	PHI	ALPHAW	BETA	CY	CLN	CSL
10.509	-1.137	.59940	.80340	1.02360	.03310	.00000	5.86240	-4.93170	.10580	-.02000	.01640
10.494	1.805	.59910	.60690	1.04100	.02650	.00000	5.85990	-4.97100	.10440	-.02320	.01670
10.489	6.479	.60010	.29110	1.07360	.01560	.00000	5.85550	-4.97800	.10110	-.02370	.01640
10.492	14.163	.59930	-.23620	1.09950	.00550	.00000	5.85080	-4.97850	.09710	-.02310	.01610
10.505	28.706	.59930	-1.23230	1.11960	-.00330	.00000	5.83810	-4.97200	.09200	-.02160	.01550
10.508	37.359	.59920	-1.82790	1.12640	-.00420	.00000	5.83380	-4.98120	.08890	-.02000	.01490
10.511	44.033	.59940	-2.28540	1.12900	-.00370	.00000	5.83110	-4.98850	.08970	-.02040	.01470
	GRADIENT	.00021	-.06757	.00697	-.00233	.00000	-.00094	-.00150	-.00071	-.00011	-.00006

RUN NO. 648/ 0 RN/L = 3.23 GRADIENT INTERVAL = .00/ 12.00

ALPHAO	DZ	MAC I	DX	DY	BETAO	PHI	ALPHAW	BETA	CY	CLN	CSL
14.815	1.009	.59980	-.36760	.95890	.02150	.00000	5.88900	-4.94920	.10420	-.02200	.01720
14.791	4.326	.60030	-.59540	.96740	.01680	.00000	5.88950	-4.94670	.10350	-.02460	.01770
14.781	8.540	.60010	-.86820	.99440	.01090	.00000	5.88650	-4.96920	.10160	-.02520	.01740
14.774	15.930	.60000	-1.39450	1.01820	.00320	.00000	5.87180	-4.97850	.09380	-.02210	.01670
14.772	31.119	.59970	-2.44090	1.04050	-.00590	.00000	5.85680	-4.97430	.08730	-.01910	.01520
14.770	46.180	.59930	-3.47810	1.04640	-.00780	.00000	5.84340	-4.97320	.08900	-.02030	.01520
14.771	61.235	.60080	-4.51680	1.05280	-.01630	.00000	5.83610	-4.98050	.09000	-.02060	.01460
	GRADIENT	.00004	-.06914	.00479	-.00141	.00000	-.00035	-.00277	-.00035	-.00041	.00002

CA20 747/1 01 SI CARRIER DATA (AGN063) (01 DEC 75)

REFERENCE DATA

SREF = 5500.0000 SQ.FT. XMRP = 1339.9000 IN.XC
LREF = 327.7800 IN. YMRP = .0000 IN.YC
BREF = 2348.0400 IN. ZMRP = 190.8000 IN.ZC
SCALE = .0300

PARAMETRIC DATA

ALPHAC =	4.000	BETAC =	-5.000
ELV-IB =	.000	ELV-OB =	3.000
ELEVON =	5.000	MACH =	.600
BETAO =	.000	PHI =	.000
DX =	10.000	DY =	.000

RUN NO. 687/ 0 RN/L = 3.29 GRADIENT INTERVAL = .00/ 12.00

ALPHAO	DZ	MACH	DX	DY	BETAO	PHI	ALPHAW	BETA	CY	CLN	CSL
10.405	-1.285	.59940	10.77730	1.90140	.03370	.00000	5.65870	-4.98130	.10280	-.01980	.01620
10.394	1.344	.60020	10.60780	1.91000	.02940	.00000	5.66910	-4.97040	.10350	-.02310	.01640
10.395	6.229	.60060	10.27400	1.93450	.02040	.00000	5.68540	-4.95980	.10000	-.02350	.01630
10.414	13.845	.60080	9.74720	1.95870	.01170	.00000	5.66110	-4.97800	.09630	-.02300	.01580
10.432	28.680	.60030	8.71070	1.97770	.00290	.00000	5.65270	-4.97890	.09200	-.02190	.01550
10.441	43.758	.59900	7.68350	1.98520	.00130	.00000	5.64450	-4.99020	.08930	-.02050	.01480
10.445	48.107	.60080	7.38000	1.98630	.00000	.00000	5.64530	-4.97980	.08990	-.02080	.01460
	GRADIENT	.00008	-.08935	.00502	-.00184	.00000	-.00055	.00012	-.00074	-.00008	-.00002

RUN NO. 688/ 0 RN/L = 3.26 GRADIENT INTERVAL = .00/ 12.00

ALPHAO	DZ	MACH	DX	DY	BETAO	PHI	ALPHAW	BETA	CY	CLN	CSL
14.748	1.142	.60040	9.54500	1.81420	.02050	.00000	5.75210	-4.94570	.10610	-.02420	.01770
14.723	4.240	.59970	9.34440	1.81650	.01690	.00000	5.75270	-4.95250	.10510	-.02620	.01770
14.719	8.654	.59970	9.05210	1.84460	.01430	.00000	5.74690	-4.97680	.09990	-.02470	.01730
14.719	16.242	.59940	8.54770	1.86060	.00800	.00000	5.73890	-4.97240	.09080	-.02090	.01640
14.721	31.044	.59950	7.56580	1.88230	.00080	.00000	5.72650	-4.99170	.08590	-.01890	.01510
14.728	46.344	.59940	6.54430	1.89780	-.00130	.00000	5.71610	-4.98100	.08710	-.01970	.01480
14.727	60.991	.59900	5.56340	1.90280	-.00830	.00000	5.70940	-4.98780	.08940	-.02070	.01450
	GRADIENT	-.00009	-.05666	.00417	-.00084	.00000	-.00073	-.00411	-.00085	-.00004	-.00006

CA20 747/1 01 S1 CARRIER DATA (AGN084) (01 DEC 75)

REFERENCE DATA

SREF =	6500.0000 SQ.FT.	XMRP =	1339.9000 IN.XC		
LREF =	327.7800 IN.	YMRP =	.0000 IN.YC		
BREF =	2348.0400 IN.	ZMRP =	190.8000 IN.ZC		
SCALE =	.0300				

PARAMETRIC DATA

ALPHAC =	4.000	BETAC =	-5.000
ELV-IB =	.000	ELV-OB =	3.000
ELEVON =	5.000	MACH =	.600
BETAO =	.000	PHI =	.000
DX =	20.000	DY =	.000

RUN NO. 670/ 0 RN/L = 3.30 GRADIENT INTERVAL = .00/ 12.00

ALPHAO	DZ	MACH	DX	DY	BETAO	PHI	ALPHAW	BETA	CY	CLN	CSL
10.318	3.700	.60010	20.41600	2.83640	.02060	.00000	5.84730	-4.99440	.10150	-.02320	.01600
10.322	6.553	.59970	20.22210	2.83310	.01590	.00000	5.84340	-4.98620	.10050	-.02380	.01590
10.343	11.191	.60050	19.89920	2.84400	.01170	.00000	5.84120	-4.99390	.09870	-.02360	.01570
10.354	18.831	.59990	19.38810	2.84640	.00640	.00000	5.83970	-4.98650	.09630	-.02320	.01580
10.379	33.918	.60090	18.33430	2.85720	.00180	.00000	5.83370	-4.98860	.09040	-.02080	.01510
10.388	48.230	.60020	17.34840	2.86390	-.00110	.00000	5.82690	-4.98840	.09080	-.02100	.01480
	GRADIENT	.00012	-.06905	.00114	-.00116	.00000	-.00078	-.00010	-.00038	-.00004	-.00004

RUN NO. 671/ 0 RN/L = 3.30 GRADIENT INTERVAL = .00/ 12.00

ALPHAO	DZ	MACH	DX	DY	BETAO	PHI	ALPHAW	BETA	CY	CLN	CSL
14.501	7.815	.60010	18.90670	2.72590	.01240	.00000	5.86040	-4.98530	.10120	-.02500	.01730
14.504	11.048	.60020	18.69440	2.72740	.00960	.00000	5.85980	-4.98660	.09770	-.02350	.01700
14.509	15.518	.60040	18.37820	2.73100	.00590	.00000	5.85870	-4.98820	.09320	-.02150	.01640
14.516	22.987	.60090	17.66830	2.73860	.00130	.00000	5.85070	-4.98950	.08920	-.02000	.01580
14.524	38.017	.59990	16.83330	2.74690	.00110	.00000	5.84180	-4.98930	.08860	-.02020	.01530
14.529	52.676	.60080	15.82050	2.76460	-.00420	.00000	5.83510	-4.98920	.08850	-.02010	.01480
14.527	68.431	.60030	14.73000	2.77580	-.01180	.00000	5.83000	-4.98810	.09100	-.02130	.01460
	GRADIENT	.00003	-.06977	.00046	-.00087	.00000	-.00019	-.00040	-.00108	.00046	-.00009

CA20 747/1 01 S1 CARRIER DATA (AGR065) (01 DEC 75)

REFERENCE DATA

SREF =	5500.0000 SQ.FT.	XMRP =	1339.9000 IN.XC		
LREF =	327.7800 IN.	YMRP =	.0000 IN.YC		
BREF =	2348.0400 IN.	ZMRP =	190.8000 IN.ZC		
SCALE =	.0300				

PARAMETRIC DATA

ALPHAC =	8.000	BETAC =	-5.000
ELV-IB =	.000	ELV-OB =	3.000
ELEVON =	5.000	MACH =	.600
BETAO =	.000	PHI =	.000
DX =	.000	DY =	.000

RUN NO. 650/ 0 RN/L = 3.23 GRADIENT INTERVAL = .00/ 12.00

ALPHAO	DZ	MACH	DX	DY	BETAO	PHI	ALPHAW	BETA	CY	CLN	CSL
10.285	-2.880	.59910	-.68300	.97220	.09130	.00000	9.73440	-4.98470	.10530	-.01440	.01410
10.303	.275	.59920	-1.10310	1.02140	.06460	.00000	9.73380	-4.98020	.10110	-.01910	.01510
10.329	4.787	.59920	-1.71740	1.07390	.03930	.00000	9.73230	-4.98730	.09550	-.01970	.01510
10.366	12.206	.59950	-2.73470	1.11610	.01850	.00000	9.72900	-4.97920	.09060	-.01990	.01530
10.440	27.765	.59990	-4.89330	1.15250	-.00010	.00000	9.72430	-4.97340	.08420	-.01760	.01500
10.469	42.705	.60000	-6.98630	1.16390	-.00170	.00000	9.71690	-4.98020	.08570	-.01850	.01500
10.475	47.740	.59940	-7.66500	1.16600	-.00340	.00000	9.71310	-4.97950	.08650	-.01890	.01510
	GRADIENT	.00000	-.13613	.01163	-.00561	.00000	-.00033	-.00157	-.00124	-.00013	.00000

RUN NO. 651/ 0 RN/L = 3.22 GRADIENT INTERVAL = .00/ 12.00

ALPHAO	DZ	MACH	DX	DY	BETAO	PHI	ALPHAW	BETA	CY	CLN	CSL
14.666	-.982	.60030	-2.00400	.90170	.06040	.00000	9.76620	-4.94790	.10820	-.02140	.01610
14.656	2.094	.60050	-2.41440	.94080	.04440	.00000	9.76530	-4.94600	.10430	-.02330	.01590
14.666	6.577	.60090	-3.02330	.98050	.02720	.00000	9.75850	-4.94030	.09550	-.02080	.01560
14.686	14.365	.60070	-4.09400	1.02280	.01090	.00000	9.75280	-4.93110	.08700	-.01820	.01530
14.713	29.395	.60010	-6.16750	1.06310	-.00350	.00000	9.73950	-4.93140	.08380	-.01760	.01500
14.725	44.077	.59950	-8.20840	1.07790	-.00530	.00000	9.73030	-4.93680	.08420	-.01790	.01480
	GRADIENT	.00009	-.13582	.00886	-.00394	.00000	-.00152	.00127	-.00195	.00056	-.00007

ORIGINAL PAGE IS
OF POOR QUALITY

CA20 747/1 01 S1 CARRIER DATA (AGN066) (01 DEC 75)

REFERENCE DATA

SREF =	5500.0000 SQ.FT.	XMRP =	1339.9000 IN.XC		
LREF =	327.7800 IN.	YMRP =	.0000 IN.YC		
BREF =	2348.0400 IN.	ZMRP =	190.6000 IN.ZC		
SCALE =	.0300				

PARAMETRIC DATA

ALPHAC =	8.000	BETAC =	-5.000
ELV-IB =	.000	ELV-OB =	3.000
ELEVON =	5.000	MACH =	.600
BETAO =	.000	PHI =	.000
DX =	10.000	DY =	.000

RUN NO. 690/ 0 RN/L = 3.24 GRADIENT INTERVAL = .00/ 12.00

ALPHAO	DZ	MACH	DX	DY	BETAO	PHI	ALPHAW	BETA	CY	CLN	CSL
10.206	-2.705	.59930	9.36200	1.88080	.07970	.00000	9.73680	-4.99820	.10010	-.01580	.01580
10.219	.329	.60060	8.95250	1.90700	.08110	.00000	9.73590	-4.97970	.09740	-.01890	.01640
10.243	4.772	.60000	8.34240	1.94530	.04190	.00000	9.73540	-4.98670	.09330	-.01960	.01640
10.288	12.369	.60000	7.29150	1.98070	.02420	.00000	9.73300	-4.98620	.08990	-.02000	.01670
10.356	27.344	.59990	5.21050	2.01480	.00890	.00000	9.73050	-4.99540	.08460	-.01830	.01640
10.397	42.540	.59940	3.09140	2.02090	.00630	.00000	9.72630	-4.98720	.08530	-.01870	.01630
10.407	48.511	.60000	2.25840	2.02640	.00300	.00000	9.72420	-4.98700	.08570	-.01890	.01630
	GRADIENT	-.00014	-.13734	.00852	-.00432	.00000	-.00011	-.00158	-.00092	-.00016	.00000

RUN NO. 689/ 0 RN/L = 3.25 GRADIENT INTERVAL = .00/ 12.00

ALPHAO	DZ	MACH	DX	DY	BETAO	PHI	ALPHAW	BETA	CY	CLN	CSL
14.592	-.448	.59960	7.86760	1.78020	.05410	.00000	9.76400	-4.95400	.10410	-.02230	.01670
14.594	2.908	.60010	7.41550	1.81260	.04180	.00000	9.76290	-4.95290	.10040	-.02340	.01680
14.610	7.309	.60030	6.81330	1.84130	.03010	.00000	9.75780	-4.95500	.09290	-.02090	.01640
14.636	14.529	.60000	5.81930	1.88240	.01770	.00000	9.75460	-4.99580	.08570	-.01830	.01650
14.677	29.855	.59980	3.70390	1.90670	.00380	.00000	9.74490	-4.98070	.08260	-.01770	.01610
14.699	44.920	.59970	1.61150	1.92310	.00160	.00000	9.73540	-5.00370	.08280	-.01780	.01580
14.711	59.693	.60060	-.45210	1.93410	-.00650	.00000	9.73180	-4.98710	.08510	-.01890	.01600
	GRADIENT	.00005	-.13684	.00652	-.00266	.00000	-.00116	-.00048	-.00170	.00057	-.00009

CA20 747/1 01 S1 CARRIER DATA (AGN057) (01 DEC 75)

REFERENCE DATA

SREF = 5500.0000 SQ.FT. XMRP = 1339.9000 IN.XC
LREF = 327.7800 IN. YMRP = .0000 IN.YC
BREF = 2348.0400 IN. ZMRP = 190.8000 IN.ZC
SCALE = .0300

PARAMETRIC DATA

ALPHAC = 8.000 BETAC = -5.000
ELV-IB = .000 ELV-OB = 3.000
ELEVON = 5.000 MACH = .600
BETAO = .000 PHI = .000
DX = 20.000 DY = .000

RUN NO. 673/ 0 RN/L = 3.28 GRADIENT INTERVAL = .00/ 12.00

ALPHAO	DZ	MACH	DX	DY	BETAO	PHI	ALPHAH	BETA	CY	CLN	CSL
10.219	-1.170	.60040	19.17340	2.82560	.05290	.00000	9.73230	-4.99720	.09660	-.01780	.01440
10.227	1.973	.59930	18.74300	2.83210	.03910	.00000	9.73270	-4.98830	.09380	-.01900	.01490
10.253	6.418	.60050	18.12870	2.85480	.02700	.00000	9.73250	-4.99450	.09290	-.02010	.01470
10.286	13.777	.59970	17.11080	2.87030	.01650	.00000	9.73000	-4.99660	.09120	-.02060	.01520
10.356	28.938	.60080	14.99660	2.88840	.00590	.00000	9.72870	-4.99820	.08570	-.01860	.01510
10.397	44.164	.59940	12.87230	2.89550	.00370	.00000	9.72290	-4.98800	.08590	-.01890	.01490
10.486	49.620	.59970	12.11340	2.89960	.00120	.00000	9.71950	-4.98780	.08620	-.01910	.01500
	GRADIENT	.00027	-.13820	.00511	-.00272	.00000	-.00005	-.00148	-.00020	-.00025	-.00004

RUN NO. 672/ 0 RN/L = 3.28 GRADIENT INTERVAL = .00/ 12.00

ALPHAO	DZ	MACH	DX	DY	BETAO	PHI	ALPHAH	BETA	CY	CLN	CSL
14.374	1.887	.59920	17.50970	2.70460	.03430	.00000	9.75470	-4.95350	.10190	-.02380	.01550
14.386	5.002	.59960	17.08360	2.71260	.02630	.00000	9.75110	-4.94650	.09770	-.02270	.01510
14.403	9.317	.60070	16.48890	2.74660	.01890	.00000	9.75120	-4.98660	.09250	-.02100	.01530
14.432	16.929	.60030	15.44000	2.76710	.01050	.00000	9.74480	-4.99620	.08660	-.01880	.01520
14.474	32.128	.60020	13.33650	2.77920	.00190	.00000	9.73740	-4.99890	.08410	-.01820	.01530
14.499	46.955	.60020	11.26920	2.78500	-.00180	.00000	9.73650	-4.98880	.08420	-.01810	.01510
14.362	60.738	.60070	9.37410	2.79800	-.00980	.00000	9.72720	-4.99790	.08580	-.01910	.01500
	GRADIENT	.00021	-.13741	.00579	-.00205	.00000	-.00044	-.00475	-.00126	.00038	-.00002

CA20 747/1 01 S1 CARRIER DATA (AGN068) (01 DEC 75)

REFERENCE DATA

SREF = 5500.0000 SQ.FT. XMRP = 1339.9000 IN.XC
LREF = 327.7800 IN. YMRP = .0000 IN.YC
BREF = 2348.0400 IN. ZMRP = 190.8000 IN.ZC
SCALE = .0300

PARAMETRIC DATA

ALPHAC =	4.000	BETAC =	-5.000
ELV-IB =	.000	ELV-OB =	3.000
ELEVON =	5.000	MACH =	.600
BETAO =	.000	PHI =	.000
DX =	.000	DY =	10.000

RUN NO. 776/ 0 RN/L = 3.29 GRADIENT INTERVAL = .00/ 12.00

ALPHAO	DZ	MACH	DX	DY	BETAO	PHI	ALPHAW	BETA	CY	CLN	CSL
10.526	-1.143	.60050	.82500	11.02580	.03330	.00000	5.82390	-4.98300	.08580	-.02630	.02380
10.516	1.191	.59940	.66590	11.02200	.03310	.00000	5.82210	-4.98350	.08650	-.02580	.02340
10.514	5.570	.59990	.36930	11.02810	.02930	.00000	5.81590	-4.98570	.08330	-.02330	.02220
10.520	13.286	.59990	-.15620	11.04100	.01980	.00000	5.81020	-4.97390	.07750	-.01930	.02000
10.530	28.364	.59970	-1.18290	11.06950	.00500	.00000	5.80160	-4.99410	.07280	-.01410	.01670
10.538	43.310	.60020	-2.20400	11.08460	-.00370	.00000	5.79490	-4.99160	.08000	-.01690	.01560
10.536	47.055	.60050	-2.45960	11.08530	-.00430	.00000	5.79340	-4.99080	.08200	-.01780	.01550
	GRADIENT	.00011	-.06774	.00139	-.00087	.00000	-.00142	-.00050	-.00073	.00057	-.00027

RUN NO. 782/ 0 RN/L = 3.21 GRADIENT INTERVAL = .00/ 12.00

ALPHAO	DZ	MACH	DX	DY	BETAO	PHI	ALPHAW	BETA	CY	CLN	CSL
14.852	1.732	.59980	-.39120	10.90410	.03150	.00000	5.85610	-4.98030	.08100	-.02940	.02920
14.836	4.566	.59980	-.58540	10.91290	.03110	.00000	5.85110	-4.98100	.08110	-.02860	.02790
14.828	8.860	.59930	-.88970	10.92830	.02600	.00000	5.84790	-4.97830	.07370	-.02310	.02660
14.824	16.510	.59970	-1.41720	10.95100	.01650	.00000	5.83890	-4.98390	.06600	-.01690	.02340
14.826	31.452	.59940	-2.44000	10.98190	.00210	.00000	5.82350	-4.99490	.05230	-.00480	.01720
14.825	46.606	.59980	-3.48110	11.00070	-.00680	.00000	5.81640	-4.99650	.06950	-.01160	.01560
14.822	61.410	.60010	-4.49630	11.01650	-.01520	.00000	5.80690	-4.99090	.08190	-.01770	.01560
	GRADIENT	-.00007	-.07001	.00341	-.00081	.00000	-.00112	.00031	-.00108	.00092	-.00036

CA20 747/1 01 SI CARRIER DATA (AGN069) (01 DEC 75)

REFERENCE DATA

SREF = 5500.0000 SQ.FT. XMRP = 1339.9000 IN.XC
LREF = 327.7800 IN. YMRP = .0000 IN.YC
BREF = 2348.0400 IN. ZMRP = 190.8000 IN.ZC
SCALE = .0300

PARAMETRIC DATA

ALPHAC = 4.000 BETAC = -5.000
ELV-IB = .000 ELV-OB = 3.000
ELEVON = 5.000 MACH = .600
BETAO = .000 PHI = .000
DX = 10.000 DY = 10.000

RUN NO. 0/ 0 RN/L = 3.24 GRADIENT INTERVAL = .00/ 12.00

ALPHAO	DZ	MACH	DX	DY	BETAO	PHI	ALPHAW	BETA	CY	CLN	CSL
10.422	-2.280	.60090	10.86020	11.92480	.02940	.00000	5.86230	-4.99330	.08920	-.02620	.02170
10.405	1.098	.60050	10.63330	11.90880	.03080	.00000	5.86150	-4.99070	.08930	-.02640	.02180
10.409	5.675	.60010	10.31780	11.91340	.02640	.00000	5.85890	-4.99290	08590	-.02390	.02110
10.422	13.013	.60030	9.81090	11.92200	.01880	.00000	5.85720	-4.98880	.07970	-.01990	.01940
10.450	28.103	.60030	8.76710	11.94740	.00440	.00000	5.84830	-5.00120	.07400	-.01470	.01630
10.460	43.255	.60080	7.71670	11.95920	-.00230	.00000	5.84490	-4.99910	.08020	-.01700	.01530
10.461	46.967	.59980	7.46120	11.96490	-.00580	.00000	5.84130	-4.99850	.08190	-.01790	.01520
	GRADIENT	-.00009	-.06892	.00100	-.00096	.00000	-.00057	-.00048	-.00074	.00055	-.00015

RUN NO. 0/ 0 RN/L = 3.24 GRADIENT INTERVAL = .00/ 12.00

ALPHAO	DZ	MACH	DX	DY	BETAO	PHI	ALPHAW	BETA	CY	CLN	CSL
14.683	.236	.60030	9.56110	11.80380	.02130	.00000	5.88610	-4.98800	.08540	-.02950	.02710
14.666	3.450	.59990	9.34130	11.79350	.02210	.00000	5.88520	-4.98830	.08540	-.02920	.02640
14.666	8.165	.59970	9.01260	11.80250	.01790	.00000	5.88170	-4.98550	.07770	-.02380	.02520
14.674	15.415	.60030	8.51180	11.82650	.00960	.00000	5.87290	-4.99350	.06920	-.01780	.02230
14.676	30.037	.59960	7.49850	11.85690	-.00230	.00000	5.86430	-5.01000	.05370	-.00520	.01660
14.680	45.279	.59970	6.44230	11.87390	-.00980	.00000	5.85630	-5.00360	.07050	-.01220	.01530
14.681	60.620	.60010	5.37930	11.89030	-.01810	.00000	5.84740	-4.99960	.08140	-.01770	.01510
	GRADIENT	-.00007	-.06922	-.00001	-.00046	.00000	-.00057	.00034	-.00102	.00075	-.00024

ORIGINAL PAGE IS
OF POOR QUALITY

CA20 747/1 01 S1 CARRIER DATA (AGN070) (01 DEC 75)

REFERENCE DATA

SREF =	5500.0000 SQ.FT.	XMRP =	1339.9000 IN.XC		
LREF =	327.7800 IN.	YMRP =	.0000 IN.YC		
BREF =	2348.0400 IN.	ZMRP =	190.8000 IN.ZC		
SCALE =	.0300				

PARAMETRIC DATA

ALPHAC =	8.000	BETAC =	-5.000
ELV-IB =	.000	ELV-OB =	3.000
ELEVON =	5.000	MACH =	.600
BETAO =	.000	PHI =	.000
DX =	.000	DY =	10.000

RUN NO. 779/ 0 RN/L = 3.28 GRADIENT INTERVAL = .00/ 12.00

ALPHAO	DZ	MACH	DX	DY	BETAO	PHI	ALPHAW	BETA	CY	CLN	CSL
10.342	-2.449	.60020	-.70020	11.07990	.03430	.00000	9.67310	-4.98670	.07830	-.02260	.01940
10.363	.833	.60030	-1.14580	11.06330	.04050	.00000	9.67390	-4.98980	.07680	-.02140	.01950
10.393	5.429	.60090	-1.77560	11.06390	.03940	.00000	9.67190	-4.97940	.07460	-.01930	.01940
10.426	12.730	.60070	-2.77410	11.07080	.03250	.00000	9.66910	-4.98290	.07050	-.01560	.01830
10.479	27.999	.60040	-4.87390	11.09480	.01510	.00000	9.66510	-4.98470	.07140	-.01360	.01660
10.511	42.823	.60060	-6.92000	11.11030	.00500	.00000	9.65760	-4.98200	.07890	-.01650	.01590
10.514	46.832	.60000	-7.47470	11.11160	.00260	.00000	9.65660	-4.97380	.08050	-.01710	.01590
	GRADIENT	.00013	-.13708	.00013	-.00024	.00000	-.00044	-.00209	-.00048	.00046	-.00002

RUN NO. 786/ 0 RN/L = 3.19 GRADIENT INTERVAL = .00/ 12.00

ALPHAO	DZ	MACH	DX	DY	BETAO	PHI	ALPHAW	BETA	CY	CLN	CSL
14.727	.234	.59910	-2.11200	10.95930	.03290	.00000	9.69510	-4.97390	.06970	-.02590	.02550
14.734	3.279	.60060	-2.52880	10.95100	.03560	.00000	9.69350	-4.97670	.06770	-.02260	.02460
14.749	7.626	.60090	-3.12530	10.95380	.03220	.00000	9.69840	-4.98000	.06450	-.01890	.02330
14.763	15.024	.60020	-4.13640	10.96820	.02370	.00000	9.68090	-4.97890	.05640	-.01170	.02090
14.794	30.355	.60080	-6.23900	10.99590	.00990	.00000	9.67220	-5.00080	.05240	-.00460	.01700
14.799	45.083	.59910	-8.28830	11.02160	-.00320	.00000	9.66110	-4.97740	.07150	-.01330	.01630
14.813	60.285	.60050	-10.37530	11.04200	-.01020	.00000	9.65630	-4.97420	.07950	-.01670	.01590
	GRADIENT	.00023	-.13709	-.00065	-.00014	.00000	-.00092	-.00082	-.00071	.00094	-.00030

CA20 747/1 01 S1 CARRIER DATA (AGH071) (01 DEC 75)

REFERENCE DATA

SREF =	5500.0000 SQ.FT.	XMRP =	1339.9000 IN.XC		
LREF =	327.7800 IN.	YMRP =	.0000 IN.YC		
BREF =	2348.0400 IN.	ZMRP =	190.8000 IN.ZC		
SCALE =	.0300				

PARAMETRIC DATA

ALPHAC =	8.000	BETAC =	-5.000
ELV-IB =	.000	ELV-OB =	3.000
ELEVON =	5.000	MACH =	.600
BETAO =	.000	PHI =	.000
DX =	10.000	DY =	10.000

RUN NO. 740/ 0 RN/L = 3.25 GRADIENT INTERVAL = .00/ 12.00

ALPHAO	DZ	MACH	DX	DY	BETAO	PHI	ALPHAH	BETA	CY	CLN	CSL
10.224	-3.964	.59950	9.54340	11.98930	.02010	.00000	9.72770	-4.98500	.07950	-.02170	.01728
10.249	-1.071	.59930	9.14780	11.96350	.03160	.00000	9.72740	-4.99230	.08020	-.02220	.01760
10.273	3.575	.59930	8.51140	11.95450	.03510	.00000	9.72430	-4.99380	.07810	-.02060	.01790
10.307	11.249	.59930	7.45290	11.96080	.03020	.00000	9.72660	-5.00460	.07370	-.01710	.01740
10.375	26.103	.59980	5.39230	11.98210	.01380	.00000	9.72030	-5.00760	.07150	-.01380	.01590
10.407	41.260	.59940	3.28540	11.99630	.00440	.00000	9.71560	-5.00550	.07790	-.01610	.01520
10.427	47.378	.59990	2.42810	11.99460	.00110	.00000	9.71360	-4.98920	.08000	-.01700	.01540
	GRADIENT	-.00000	-.13793	.00082	-.00064	.00000	.00030	-.00141	-.00057	.00046	-.00007

RUN NO. 741/ 0 RN/L = 3.24 GRADIENT INTERVAL = .00/ 12.00

ALPHAO	DZ	MACH	DX	DY	BETAO	PHI	ALPHAH	BETA	CY	CLN	CSL
14.548	-1.395	.59950	8.03360	11.85890	.02640	.00000	9.75250	-4.98160	.07370	-.02570	.02270
14.553	1.311	.60060	7.66380	11.85090	.02930	.00000	9.75100	-4.99080	.07290	-.02390	.02240
14.570	6.124	.60020	7.00200	11.85400	.02630	.00000	9.74500	-5.00250	.06820	-.01960	.02150
14.599	13.813	.59960	5.93860	11.85930	.01810	.00000	9.74180	-5.00110	.05930	-.01260	.01970
14.637	28.816	.60080	3.86530	11.87690	.00400	.00000	9.73430	-5.00730	.05450	-.00580	.01640
14.658	43.625	.60060	1.80890	11.89170	-.00480	.00000	9.72660	-5.00060	.07090	-.01310	.01580
14.668	58.608	.60080	-.28100	11.91350	-.01270	.00000	9.72080	-5.00520	.07870	-.01650	.01540
	GRADIENT	-.00008	-.13750	.00064	-.00062	.00000	-.00125	-.00243	-.00098	.00089	-.00019

CA20 747/1 01 S1 CARRIER DATA (AGN072) (01 DEC 75)

REFERENCE DATA

SREF =	6500.0000 SQ.FT.	XMRP =	1339.9000 IN.XC		
LREF =	327.7800 IN.	YMRP =	.0000 IN.YC		
BREF =	2348.0400 IN.	ZMRP =	190.8000 IN.ZC		
SCALE =	.0300				

PARAMETRIC DATA

ALPHAC =	4.000	BETAC =	5.000
ELV-IB =	.000	ELV-OB =	3.000
ELEVON =	5.000	MACH =	.600
BETAO =	.000	PHI =	.000
DX =	.000	DY =	10.000

RUN NO. 777/ 0 RN/L = 3.27 GRADIENT INTERVAL = .CO/ 12.00

ALPHAO	DZ	MACH	DX	DY	BETAO	PHI	ALPHAH	BETA	CY	CLN	CSL
10.561	-1.260	.60020	.82840	8.80620	.04300	.00000	5.82950	5.04410	-.11870	.01170	-.00560
10.547	1.334	.60070	.65390	8.81240	.03620	.00000	5.82790	5.04880	-.11810	.01480	-.00710
10.536	5.878	.60010	.34760	8.81490	.03050	.00000	5.82070	5.02710	-.12360	.02150	-.00920
10.536	13.042	.60030	-.13900	8.81520	.02440	.00000	5.81370	5.02260	-.12620	.02630	-.01100
10.541	28.032	.60030	-1.15930	8.82060	.01180	.00000	5.80310	5.03420	-.12770	.03030	-.01320
10.562	43.597	.59990	-2.23230	8.83030	.00450	.00000	5.79570	5.03470	-.12330	.02970	-.01420
10.545	47.071	.60050	-2.46160	8.83200	.00240	.00000	5.79470	5.03480	-.12240	.02950	-.01440
	GRADIENT	-.00013	-.06740	.00055	-.00125	.00000	-.00158	-.00478	-.00121	.00147	-.00046

RUN NO. 783/ 0 RN/L = 3.21 GRADIENT INTERVAL = .00/ 12.00

ALPHAO	DZ	MACH	DX	DY	BETAO	PHI	ALPHAH	BETA	CY	CLN	CSL
14.885	1.660	.60010	-.39220	8.87450	.03220	.00000	5.86770	5.00070	-.11870	.00810	-.00180
14.865	4.767	.59920	-.60880	8.88830	.02700	.00000	5.86470	5.01010	-.12110	.01460	-.00390
14.851	8.930	.59950	-.89480	8.88570	.02380	.00000	5.85730	5.01040	-.12800	.02250	-.00630
14.843	16.495	.59930	-1.41200	8.90170	.01890	.00000	5.84480	4.99980	-.12700	.02580	-.00920
14.833	31.538	.60060	-2.44310	8.92270	.00830	.00000	5.82820	4.97960	-.12850	.03070	-.01210
14.829	46.682	.60030	-3.48380	8.93760	-.00030	.00000	5.81730	4.98730	-.12500	.03080	-.01340
14.822	61.660	.59980	-4.51590	8.95050	-.00770	.00000	5.81000	4.98860	-.12050	.02940	-.01390
	GRADIENT	-.00007	-.06911	.00142	-.00113	.00000	-.00145	.00126	-.00130	.00198	-.00062

CA20 747/1 01 S1 CARRIER DATA (AGN0731 (01 DEC 75)

REFERENCE DATA

SREF = 5500.0000 SQ.FT. XMRP = 1339.9000 IN.XC
LREF = 327.7800 IN. YMRP = .0000 IN.YC
BREF = 2348.0400 IN. ZMRP = 190.8000 IN.ZC
SCALE = .0300

PARAMETRIC DATA

ALPHAC =	4.000	BETAC =	5.000
ELV-IB =	.000	ELV-OB =	3.000
ELEVON =	5.000	MACH =	.600
BETAO =	.000	PHI =	.000
DX =	10.000	DY =	10.000

RUN NO. 743/ 0 RN/L = 3.24 GRADIENT INTERVAL = .00/ 12.00

ALPHAO	DZ	MACH	DX	DY	BETAO	PHI	ALPHAH	BETA	CY	CLN	CSL
10.456	-2.278	.60010	10.85340	7.94940	.03880	.00000	5.86640	5.03030	-.11110	.00990	-.00720
10.441	.974	.59990	10.63180	7.95910	.03240	.00000	5.86880	5.01890	-.11140	.01370	-.00860
10.437	5.632	.60000	10.31420	7.96140	.02670	.00000	5.86360	5.00500	-.11750	.02020	-.01030
10.440	12.947	.60040	9.81390	7.96130	.02090	.00000	5.85810	5.00010	-.12200	.02540	-.01170
10.454	28.272	.59990	8.75740	7.96870	.00920	.00000	5.84940	4.99630	-.12450	.02950	-.01370
10.462	43.215	.59990	7.72040	7.97210	.00210	.00000	5.84560	5.00410	-.12210	.02940	-.01460
10.464	46.952	.60080	7.46360	7.97530	-.00040	.00000	5.84240	5.00430	-.12080	.02910	-.01460
	GRADIENT	.00002	-.06818	.00049	-.00122	.00000	-.00112	-.00298	-.00131	.00140	-.00036

RUN NO. 746/ 0 RN/L = 3.23 GRADIENT INTERVAL = .00/ 12.00

ALPHAO	DZ	MACH	DX	DY	BETAO	PHI	ALPHAH	BETA	CY	CLN	CSL
14.699	.081	.60070	9.56470	8.04510	.01920	.00000	5.89040	5.01680	-.11200	.00740	-.00450
14.686	3.398	.60090	9.33840	8.04540	.01660	.00000	5.88440	5.01860	-.11540	.01360	-.00620
14.677	8.089	.59980	9.01750	8.04550	.01310	.00000	5.87840	5.01900	-.12300	.02160	-.00850
14.677	15.482	.60080	8.51410	8.04890	.00880	.00000	5.86910	5.00690	-.12600	.02620	-.01050
14.674	30.336	.59920	7.49140	8.06690	.00080	.00000	5.85560	5.00270	-.12850	.03080	-.01300
14.676	45.437	.59990	6.44350	8.08710	-.00650	.00000	5.84830	4.99500	-.12520	.03080	-.01410
14.674	60.598	.59920	5.39480	8.09960	-.01450	.00000	5.83970	5.00380	-.12180	.02960	-.01460
	GRADIENT	-.00012	-.08833	.00005	-.00076	.00000	-.00148	.00026	-.00139	.00177	-.00050

CA20 747/1 01 S1 CARRIER DATA (AGN0741 (01 DEC 75)

REFERENCE DATA

SREF = 5500.0000 SQ.FT. XMRP = 1339.9000 IN.XC
LREF = 327.7800 IN. YMRP = .0000 IN.YC
BREF = 2348.0400 IN. ZMRP = 190.8000 IN.ZC
SCALE = .0300

PARAMETRIC DATA

ALPHAC = 8.000 BETAC = 5.000
ELV-IB = .000 ELV-OB = 3.000
ELEVON = 5.000 MACH = .600
BETAO = .000 PHI = .000
DX = .000 DY = 10.000

RUN NO. 778/ 0 RN/L = 3.27 GRADIENT INTERVAL = .00/ 12.00

ALPHAO	DZ	MACH	DX	DY	BETAO	PHI	ALPHAW	BETA	CY	CLN	CSL
10.386	-2.569	.60000	-.67920	8.78930	.04720	.00000	9.67710	5.05610	-.12080	.00980	-.00680
10.382	.494	.59990	-1.09610	8.79940	.03450	.00000	9.67430	5.04960	-.12380	.01660	-.00790
10.404	5.444	.59920	-1.77530	8.79630	.02930	.00000	9.67330	5.02910	-.12460	.02190	-.00870
10.446	12.879	.60080	-2.79560	8.78530	.02760	.00000	9.67050	5.02490	-.12630	.02620	-.00950
10.484	27.855	.60070	-4.85200	8.77840	.01750	.00000	9.66630	5.03890	-.12270	.02780	-.01110
10.507	42.785	.60090	-6.91030	8.78230	.01070	.00000	9.65900	5.03980	-.11830	.02680	-.01200
10.510	46.810	.59970	-7.47130	8.78620	.00720	.00000	9.66000	5.04000	-.11770	.02670	-.01210
	GRADIENT	-.00014	-.13720	-.00063	-.00105	.00000	-.00020	-.00414	-.00016	.00107	-.00016

RUN NO. 785/ 0 RN/L = 3.20 GRADIENT INTERVAL = .00/ 12.00

ALPHAO	DZ	MACH	DX	DY	BETAO	PHI	ALPHAW	BETA	CY	CLN	CSL
14.769	.421	.60000	-2.15370	8.90200	.01960	.00000	9.69950	5.01660	-.12500	.01020	-.00390
14.763	3.277	.60030	-2.53970	8.89780	.01780	.00000	9.69440	5.00270	-.12760	.01670	-.00580
14.765	7.611	.60040	-3.12710	8.88370	.01750	.00000	9.68640	4.99670	-.13110	.02300	-.00730
14.776	14.697	.59960	-4.11930	8.86950	.01660	.00000	9.67900	5.00080	-.13010	.02690	-.00900
14.801	30.085	.60030	-6.19610	8.86980	.01090	.00000	9.66900	4.98280	-.12660	.02970	-.01000
14.812	45.241	.60060	-8.28580	8.87710	.00540	.00000	9.66320	4.99950	-.12080	.02850	-.01040
14.809	60.161	.60050	-10.35530	8.90350	-.00530	.00000	9.65980	4.99330	-.11630	.02690	-.01090
	GRADIENT	.00005	-.13540	-.00260	-.00027	.00000	-.00182	-.00266	-.00085	.00175	-.00046

ORIGINAL PAGE IS
OF POOR QUALITY

CA20 747/1 01 S1 CARRIER DATA (AGN075) (01 DEC 75)

REFERENCE DATA

SREF =	5500.0000 SQ.FT.	XMRP =	1339.9000 IN.XC
LREF =	327.7800 IN.	YMRP =	.0000 IN.YC
BREF =	2348.0400 IN.	ZMRP =	190.8000 IN.ZC
SCALE =	.0300		

PARAMETRIC DATA

ALPHAC =	8.000	BETAC =	5.000
ELV-IB =	.000	ELV-OB =	3.000
ELEVON =	5.000	MACH =	.600
BETAO =	.000	PHI =	.000
DX =	10.000	DY =	10.000

RUN NO. 744/ 0 RN/L = 3.24 GRADIENT INTERVAL = .00/ 12.00

ALPHAO	DZ	MACH	DX	DY	BETAO	PHI	ALPHAW	BETA	CY	CLN	CSL
10.291	-4.295	.59980	9.60240	7.92050	.05400	.00000	9.71810	5.02020	-.11450	.00710	-.00548
10.284	-1.016	.60000	9.14600	7.93820	.03580	.00000	9.72130	5.02130	-.11650	.01390	-.00680
10.296	3.234	.60090	8.56250	7.93260	.03000	.00000	9.71870	5.02420	-.11920	.01900	-.00770
10.325	10.653	.60020	7.54070	7.92720	.02580	.00000	9.71900	5.01130	-.12240	.02450	-.00880
10.391	26.076	.59950	5.40030	7.92620	.01500	.00000	9.71380	5.00840	-.12170	.02760	-.01030
10.421	40.921	.60020	3.33920	7.93180	.00830	.00000	9.70970	5.00110	-.11820	.02710	-.01100
10.429	47.381	.59990	2.44250	7.93360	.00400	.00000	9.70550	5.00900	-.11740	.02690	-.01120
	GRADIENT	-.00009	-.13773	-.00073	-.00057	.00000	.00004	-.00174	-.00043	.00074	-.00015

RUN NO. 745/ 0 RN/L = 3.23 GRADIENT INTERVAL = .00/ 12.00

ALPHAO	DZ	MACH	DX	DY	BETAO	PHI	ALPHAW	BETA	CY	CLN	CSL
14.583	-1.882	.60010	8.09210	8.06760	.01710	.00000	9.74680	5.02630	-.11810	.00820	-.00430
14.579	1.393	.59950	7.64570	8.06130	.01580	.00000	9.74410	5.01250	-.12080	.01470	-.00520
14.585	5.736	.60040	7.05370	8.04400	.01390	.00000	9.74010	5.01420	-.12540	.02100	-.00670
14.601	12.961	.60040	6.06200	8.03060	.01140	.00000	9.73450	5.00960	-.12730	.02580	-.00830
14.629	28.063	.59950	3.97810	8.02230	.00320	.00000	9.72720	5.00640	-.12660	.02940	-.01090
14.652	42.937	.60070	1.91620	8.02770	-.00220	.00000	9.71930	4.99980	-.12090	.02820	-.01220
14.658	57.817	.59950	-.15670	8.04120	-.00950	.00000	9.71390	5.00110	-.11670	.02690	-.01280
	GRADIENT	.00021	-.13630	-.00398	-.00044	.00000	-.00092	.00039	-.00106	.00145	-.00035

CA20 747/1 01 S1 CARRIER DATA (AGN076) (01 DEC 75)

REFERENCE DATA

SREF =	5500.0000 SQ.FT.	XMRP =	1339.5000 IN.XC
LREF =	327.7800 IN.	YMRP =	.0000 IN.YC
BREF =	2348.0400 IN.	ZMRP =	190.8000 IN.ZC
SCALE =	.0300		

PARAMETRIC DATA

ALPHAC =	4.000	DETAC =	-5.000
ELV-IB =	.000	ELV-OB =	3.000
ELEVON =	5.000	MACH =	.600
BETAO =	.000	PHI =	7.500
DX =	.000	DY =	.000

RUN NO. 700/ 0 RN/L = 3.24 GRADIENT INTERVAL = .00/ 12.00

ALPHAO	DZ	MACH	DX	DY	BETAO	PHI	ALPHAW	BETA	CY	CLN	CSL
10.498	-1.277	.59980	.83250	1.15460	.36450	7.50000	5.83850	-5.05480	.09310	-.01460	.01400
10.489	2.021	.60000	.61190	1.18340	.35490	7.50000	5.83680	-5.04370	.09370	-.01810	.01410
10.492	6.318	.60080	.32120	1.21560	.34580	7.50000	5.83320	-5.04780	.09670	-.02190	.01450
10.500	13.726	.60020	-.18460	1.24350	.33660	7.50000	5.82810	-5.04000	.09480	-.02200	.01450
10.510	28.683	.60070	-1.20160	1.27850	.32710	7.50000	5.81510	-5.04710	.09450	-.02250	.01470
10.516	43.777	.60040	-2.23760	1.28820	.32620	7.50000	5.80850	-5.04020	.09260	-.02160	.01430
10.513	47.275	.59920	-2.47710	1.29290	.32410	7.50000	5.80680	-5.04010	.09290	-.02180	.01420
	GRADIENT	.00019	-.06765	.00749	-.00212	.00000	-.00084	-.00095	.00070	-.00088	.00009

RUN NO. 699/ 0 RN/L = 3.25 GRADIENT INTERVAL = .00/ 12.00

ALPHAO	DZ	MACH	DX	DY	BETAO	PHI	ALPHAW	BETA	CY	CLN	CSL
14.757	1.988	.59900	-.38000	1.14030	.90370	7.50000	5.86610	-5.05330	.09100	-.01660	.01390
14.746	4.533	.59970	-.55960	1.15770	.89700	7.50000	5.86300	-5.04270	.09370	-.01950	.01420
14.741	9.089	.59940	-.87360	1.17880	.89010	7.50000	5.85990	-5.04130	.09410	-.02090	.01420
14.736	18.707	.59980	-1.39380	1.20160	.88280	7.50000	5.84940	-5.04330	.08890	-.01850	.01400
14.734	31.718	.60020	-2.41740	1.22950	.87480	7.50000	5.83020	-5.04070	.09220	-.02110	.01430
14.738	46.694	.59920	-3.44230	1.23390	.87190	7.50000	5.81970	-5.04800	.09270	-.02170	.01430
14.739	61.610	.60030	-4.47430	1.24610	.86560	7.50000	5.81480	-5.03960	.09360	-.02230	.01420
	GRADIENT	.00004	-.06875	.00528	-.00185	.00000	-.00084	.00152	.00039	-.00057	.00004

CA20 747/1 01 S1 CARRIER DATA (AGN077) (01 DEC 75)

REFERENCE DATA

SREF = 5500.0000 SQ.FT. XMRP = 1339.9000 IN.XC
LREF = 327.7800 IN. YMRP = .0000 IN.YC
BREF = 2348.0400 IN. ZMRP = 190.8000 IN.ZC
SCALE = .0300

PARAMETRIC DATA

ALPHAC =	4.000	BETAC =	-5.000
ELV-IB =	.000	ELV-OB =	3.000
ELEVON =	5.000	MACH =	.600
BETAO =	.000	PHI =	7.500
DX =	10.000	DY =	.000

RUN NO. 679/ 0 RN/L = 3.29 GRADIENT INTERVAL = .00/ 12.00

ALPHAO	DZ	MACH	DX	DY	BETAO	PHI	ALPHAW	BETA	CY	CLN	CSL
10.372	-2.105	.60020	10.03710	2.01610	.34580	7.50000	5.85010	-5.00500	.09420	-.01250	.01350
10.387	1.060	.59990	10.65570	2.02110	.34160	7.50000	5.84920	-4.98530	.09440	-.01710	.01420
10.387	5.691	.60070	10.34240	2.05170	.33240	7.50000	5.84990	-4.98100	.09790	-.02150	.01460
10.389	13.253	.60030	9.82060	2.08120	.32670	7.50000	5.84450	-4.98760	.09750	-.02270	.01470
10.411	28.268	.60010	8.78850	2.11400	.31800	7.50000	5.83790	-4.98730	.09540	-.02290	.01490
10.422	43.330	.59990	7.75290	2.12730	.31760	7.50000	5.82940	-4.98850	.09310	-.02160	.01420
10.423	48.502	.59940	7.39550	2.13120	.31640	7.50000	5.82760	-4.98840	.09290	-.02170	.01440
	GRADIENT	.00017	-.06766	.00661	-.00199	.00000	.00015	.00093	.00076	-.00095	.00009

RUN NO. 680/ 0 RN/L = 3.28 GRADIENT INTERVAL = .00/ 12.00

ALPHAO	DZ	MACH	DX	DY	BETAO	PHI	ALPHAW	BETA	CY	CLN	CSL
14.684	.874	.60040	9.54560	1.96400	.89390	7.50000	5.87640	-4.96580	.08900	-.01340	.01400
14.667	4.232	.60010	9.31860	1.98550	.88600	7.50000	5.87720	-4.96930	.09240	-.01800	.01450
14.662	8.405	.60050	9.03360	2.01180	.88290	7.50000	5.87440	-4.98210	.09410	-.02060	.01450
14.663	16.057	.60090	8.51080	2.03990	.87710	7.50000	5.86600	-4.99360	.09030	-.01920	.01430
14.668	30.959	.59980	7.48720	2.05970	.87070	7.50000	5.85230	-4.98160	.09160	-.02080	.01450
14.672	45.936	.59930	6.45680	2.06910	.86860	7.50000	5.84070	-4.98100	.09240	-.02140	.01440
14.683	61.178	.59910	5.39730	2.08060	.86400	7.50000	5.83590	-4.98820	.09360	-.02200	.01430
	GRADIENT	.00002	-.06800	.00635	-.00145	.00000	-.00028	-.00220	.00067	-.00094	.00006

CA20 747/1 01 S1 CARRIER DATA (AON078) (01 DEC 75)

REFERENCE DATA

SREF = 5500.0000 SQ.FT. XMRP = 1339.9000 IN.XC
LREF = 327.7800 IN. YMRP = .0000 IN.YC
BREF = 2348.0400 IN. ZMRP = 190.8000 IN.ZC
SCALE = .0300

PARAMETRIC DATA

ALPHAC =	8.000	BETAC =	-5.000
ELV-IB =	.000	ELV-OB =	3.000
ELEVON =	5.000	MACH =	.600
BETAO =	.000	PHI =	7.500
DX =	.000	DY =	.000

RUN NO. 701/ 0 RN/L = 3.22 GRADIENT INTERVAL = .00/ 12.00

ALPHAO	DZ	MACH	DX	DY	BETAO	PHI	ALPHAH	BETA	CY	CLN	CSL
10.301	-1.522	.59970	-.83310	1.08330	.39300	7.50000	9.69190	-5.04570	.09300	-.01360	.01360
10.323	1.720	.59990	-1.27100	1.13320	.37340	7.50000	9.69140	-5.04160	.09420	-.01810	.01380
10.358	6.033	.60060	-1.86180	1.18510	.35540	7.50000	9.69140	-5.04760	.09360	-.01980	.01390
10.398	15.288	.59980	-3.12410	1.24460	.33730	7.50000	9.68470	-5.03900	.09120	-.02070	.01440
10.452	28.550	.60080	-4.95350	1.29230	.32740	7.50000	9.68130	-5.04800	.08770	-.01910	.01450
10.485	43.635	.59990	-7.04370	1.31350	.32720	7.50000	9.67630	-5.04730	.08850	-.01980	.01470
10.490	47.136	.60050	-7.52840	1.31640	.32660	7.50000	9.67520	-5.03940	.08870	-.02000	.01470
	GRADIENT	.00016	-.13697	.01203	-.00394	.00000	.00000	-.00139	-.00014	-.00039	.00002

RUN NO. 698/ 0 RN/L = 3.31 GRADIENT INTERVAL = .00/ 12.00

ALPHAO	DZ	MACH	DX	DY	BETAO	PHI	ALPHAH	BETA	CY	CLN	CSL
14.639	1.551	.60080	-2.26150	1.07140	.92630	7.50000	9.67920	-5.05090	.09360	-.01700	.01490
14.646	4.440	.59940	-2.65160	1.10830	.91390	7.50000	9.67710	-5.04860	.09410	-.01940	.01470
14.662	9.007	.60060	-3.26780	1.14300	.90190	7.50000	9.67380	-5.02670	.08890	-.01780	.01468
14.679	16.752	.60000	-4.31660	1.19170	.88790	7.50000	9.66390	-5.05080	.08530	-.01670	.01450
14.701	31.550	.60040	-6.33690	1.23600	.87700	7.50000	9.64870	-5.03090	.09180	-.02130	.01560
14.713	46.466	.60000	-8.39580	1.26140	.87320	7.50000	9.64450	-5.04770	.08850	-.01960	.01530
14.722	61.470	.60040	-10.46660	1.28150	.86640	7.50000	9.63820	-5.04710	.08940	-.02020	.01540
	GRADIENT	-.00080	-.13496	.00943	-.00321	-.00000	-.00072	.00339	-.00068	-.00007	-.00004

ORIGINAL PAGE IS
OF POOR QUALITY

CA20 747/1 01 S1 CARRIER DATA (AGN079) (01 DEC 75)

REFERENCE DATA

SREF = 5500.0000 SQ.FT. XMRP = 1339.9000 IN.XC
LREF = 327.7800 IN. YMRP = .0000 IN.YC
BREF = 2348.0400 IN. ZMRP = 190.8000 IN.ZC
SCALE = .0300

PARAMETRIC DATA

ALPHAC = 8.000 BETAC = -5.000
ELV-IB = .000 ELV-OB = 3.000
ELEVON = 5.000 MACH = .600
BETAO = .000 PHI = 7.500
DX = 10.000 DY = .000

RUN NO. 682/ 0 RN/L = 3.27 GRADIENT INTERVAL = .00/ 12.00

ALPHAO	DZ	MACH	DX	DY	BETAO	PHI	ALPHAH	BETA	CY	CLN	CSL
10.182	-3.146	.59980	9.44330	1.93780	.37820	7.50000	9.72010	-4.99620	.09550	-.01120	.01290
10.201	-.191	.60050	9.04330	1.97280	.36380	7.50000	9.72230	-4.99230	.09350	-.01540	.01360
10.223	4.382	.60020	8.42140	2.02160	.34460	7.50000	9.72000	-4.98760	.09580	-.02040	.01380
10.263	11.935	.60030	7.38160	2.06800	.32870	7.50000	9.71950	-4.97890	.09420	-.02130	.01410
10.337	26.849	.59930	5.31290	2.12680	.31790	7.50000	9.71460	-4.99590	.08870	-.01960	.01440
10.377	42.008	.60020	3.20820	2.14560	.31730	7.50000	9.70990	-4.96020	.08850	-.01970	.01460
10.386	48.909	.60000	2.23740	2.15750	.31550	7.50000	9.71490	-4.98770	.08910	-.01990	.01470
	GRADIENT	.00001	-.13767	.00614	-.00211	.00000	-.00007	.00115	-.00021	-.00012	.00004

RUN NO. 681/ 0 RN/L = 3.27 GRADIENT INTERVAL = .00/ 12.00

ALPHAO	DZ	MACH	DX	DY	BETAO	PHI	ALPHAH	BETA	CY	CLN	CSL
14.540	-.899	.60080	7.97090	1.87070	.91980	7.50000	9.74650	-4.97150	.09250	-.01330	.01310
14.539	1.681	.60070	7.62670	1.90420	.90820	7.50000	9.74960	-4.96080	.09250	-.01640	.01310
14.550	6.191	.59980	7.01630	1.94450	.89580	7.50000	9.74300	-4.94870	.09520	-.02110	.01320
14.577	13.668	.60030	5.99450	2.00570	.88320	7.50000	9.73710	-4.98970	.08800	-.01830	.01330
14.626	28.859	.60080	3.90510	2.06670	.86940	7.50000	9.72640	-4.99530	.08990	-.02040	.01400
14.654	43.807	.60030	1.83050	2.08630	.86880	7.50000	9.72090	-4.98830	.08800	-.01950	.01430
14.668	58.633	.59980	-.23580	2.09830	.86650	7.50000	9.71490	-4.98000	.08890	-.02000	.01450
	GRADIENT	-.00020	-.13535	.00894	-.00275	-.00000	-.00146	.00268	.00060	-.00104	.00002

CA20 747/1 01 S1 CARRIER DATA (AGN080) (01 DEC 75)

REFERENCE DATA

SREF =	5500.0000 SQ.FT.	XMRP =	1339.9000 IN.XC		
LREF =	327.7800 IN.	YMRP =	.0000 IN.YC		
BREF =	2348.0400 IN.	ZMRP =	190.8000 IN.ZC		
SCALE =	.0300				

PARAMETRIC DATA

ALPHAC =	4.000	BETAC =	-5.000
ELV-IB =	.000	ELV-OB =	3.000
ELEVON =	5.000	MACH =	.600
BETAO =	.000	PHI =	7.500
DX =	.000	DY =	10.000

RUN NO. 791/ 0 RN/L = 3.34 GRADIENT INTERVAL = .00/ 12.00

ALPHAO	DZ	MACH	DX	DY	BETAO	PHI	ALPHAW	BETA	CY	CLN	CSL
10.543	.273	.59960	.69350	11.14360	.36720	7.50000	5.84270	-4.98690	.07790	-.02120	.02020
10.537	3.154	.59930	.49810	11.15020	.36560	7.50000	5.84120	-4.97990	.07700	-.02050	.02020
10.543	7.602	.60010	.19640	11.16160	.36070	7.50000	5.83540	-4.97360	.07530	-.01880	.01940
10.546	14.948	.59920	-.30580	11.18100	.35240	7.50000	5.83280	-4.98370	.07340	-.01620	.01780
10.563	30.456	.60020	-1.36340	11.21710	.33670	7.50000	5.82120	-4.98510	.07500	-.01470	.01530
10.569	45.266	.59930	-2.38270	11.23800	.33050	7.50000	5.81720	-4.98950	.08320	-.01840	.01490
10.573	47.765	.60090	-2.55600	11.24380	.32880	7.50000	5.81590	-4.99680	.08420	-.01880	.01480
	GRADIENT	.00008	-.06782	.00247	-.00091	.00000	-.00102	.00178	-.00036	.00033	-.00012

RUN NO. 792/ 0 RN/L = 3.33 GRADIENT INTERVAL = .00/ 12.00

ALPHAO	DZ	MACH	DX	DY	BETAO	PHI	ALPHAW	BETA	CY	CLN	CSL
14.693	2.086	.60000	-.37990	11.08210	.90280	7.50000	5.87000	-4.98910	.06160	-.01880	.02400
14.684	4.700	.60010	-.56200	11.09160	.90090	7.50000	5.87020	-4.98190	.06220	-.01820	.02400
14.679	9.002	.60060	-.86020	11.10680	.89490	7.50000	5.86130	-4.96840	.06140	-.01610	.02280
14.683	16.383	.60070	-1.37540	11.13310	.88490	7.50000	5.85650	-4.99530	.05840	-.01190	.02030
14.691	31.443	.59920	-2.41210	11.16780	.87000	7.50000	5.83990	-4.99270	.05650	-.00640	.01540
14.694	46.552	.59940	-3.45170	11.18970	.86380	7.50000	5.82940	-4.99250	.07610	-.01510	.01510
14.693	61.369	.59950	-4.47680	11.20770	.85570	7.50000	5.82430	-4.98120	.08490	-.01900	.01500
	GRADIENT	.00009	-.06944	.00357	-.00117	-.00000	-.00134	.00301	-.00004	.00040	-.00018

ORIGINAL PAGE IS
OF POOR QUALITY

CA20 747/1 01 S1 CARRIER DATA (AGNOB1) (01 DEC 75)

REFERENCE DATA

SREF = 5500.0000 SQ.FT. XMRP = 1339.9000 IN.XC
LREF = 327.7800 IN. YMRP = .0000 IN.YC
BREF = 2348.0400 IN. ZMRP = 190.8000 IN.ZC
SCALE = .0300

PARAMETRIC DATA

ALPHAC = 4.000 BETAC = -5.000
ELV-IB = .000 ELV-OB = 3.000
ELEVON = 5.000 MACH = .600
BETAO = .000 PHI = 7.500
DX = 10.000 DY = 10.000

RUN NO. 752/ 0 RN/L = 3.25 GRADIENT INTERVAL = .00/ 12.00

ALPHAO	DZ	MACH	DX	DY	BETAO	PHI	ALPHAW	BETA	CY	CLN	CSL
10.346	-1.602	.60090	10.84680	11.99480	.37630	7.50000	5.85440	-4.97960	.08210	-.02220	.01930
10.345	1.482	.60060	10.63530	12.00080	.37550	7.50000	5.85620	-4.98010	.08140	-.02170	.01940
10.354	5.906	.60020	10.33290	12.01730	.37080	7.50000	5.85220	-4.98920	.08010	-.02020	.01900
10.381	13.318	.60050	9.81780	12.03110	.36550	7.50000	5.84870	-4.98360	.07740	-.01790	.01770
10.403	28.645	.60020	8.76420	12.06720	.35160	7.50000	5.84180	-4.99350	.07650	-.01550	.01540
10.412	43.525	.59940	7.73690	12.08630	.34460	7.50000	5.83600	-4.99070	.08400	-.01870	.01500
10.415	47.221	.60020	7.48460	12.08790	.34240	7.50000	5.83250	-4.98240	.08540	-.01930	.01490
	GRADIENT	-.00009	-.06836	.00373	-.00106	-.00000	-.00090	-.00206	-.00029	.00034	-.00009

RUN NO. 755/ 0 RN/L = 3.25 GRADIENT INTERVAL = .00/ 12.00

ALPHAO	DZ	MACH	DX	DY	BETAO	PHI	ALPHAW	BETA	CY	CLN	CSL
14.608	-.240	.60090	9.64110	11.90700	.92390	7.50000	5.87640	-4.97970	.07350	-.02230	.02200
14.598	2.722	.60030	9.43840	11.92140	.92500	7.50000	5.87630	-4.98890	.07100	-.02080	.02260
14.593	7.480	.60030	9.11160	11.93390	.92030	7.50000	5.87390	-4.98370	.06780	-.01800	.02220
14.598	14.602	.60090	8.62320	11.95990	.91230	7.50000	5.86660	-4.99540	.06300	-.01350	.02020
14.613	29.687	.60000	7.57480	12.00060	.89630	7.50000	5.85700	-5.00190	.05760	-.00640	.01530
14.617	44.725	.59950	6.53810	12.02150	.88840	7.50000	5.84550	-4.99410	.07670	-.01500	.01500
14.621	59.760	.60020	5.50180	12.03780	.88140	7.50000	5.83640	-4.99030	.08530	-.01910	.01490
	GRADIENT	.00000	-.06868	.00263	-.00099	.00000	-.00050	.00109	-.00067	.00059	-.00008

CA20 747/1 01 S1 CARRIER DATA (ACN082) (01 DEC 75)

REFERENCE DATA

SREF = 5500.0000 SQ.FT. XMRP = 1339.9000 IN.XC
LREF = 327.7800 IN. YMRP = .0000 IN.YC
BREF = 2348.0400 IN. ZMRP = 190.8000 IN.ZC
SCALE = .0300

PARAMETRIC DATA

ALPHAC = 8.000 BETAC = -5.000
ELV-IB = .000 ELV-OB = 3.000
ELEVON = 5.000 MACH = .600
BETAD = .000 PHI = 7.500
DX = .000 DY = 10.000

RUN NO. 798/ 0 RN/L = 3.28 GRADIENT INTERVAL = .00/ 12.00

ALPHAO	DZ	MACH	DX	DY	BETAO	PHI	ALPHAW	BETA	CY	CLN	CSL
10.341	-.270	.60070	-1.00870	11.14970	.35700	7.50000	9.65950	-4.98570	.07560	-.02000	.01800
10.486	.652	.59920	-1.21140	11.14280	.37710	7.50000	9.65970	-4.98610	.07500	-.01980	.01800
10.365	3.053	.59990	-1.45750	11.15070	.36160	7.50000	9.65670	-4.97910	.07470	-.01890	.01810
10.389	7.539	.59900	-2.06810	11.16310	.36060	7.50000	9.65760	-4.98830	.07350	-.01740	.01780
10.427	14.849	.60020	-3.06390	11.18630	.35350	7.50000	9.65440	-4.99010	.07250	-.01540	.01730
10.498	30.104	.59970	-5.16390	11.23050	.34070	7.50000	9.64830	-4.98980	.07700	-.01570	.01630
10.519	44.754	.60050	-7.17850	11.25610	.33340	7.50000	9.64570	-4.98770	.08280	-.01800	.01610
10.519	47.323	.60030	-7.52920	11.25990	.33110	7.50000	9.64270	-4.98730	.08390	-.01840	.01600
	GRADIENT	-.00005	-.12590	.00292	-.00212	.00000	-.00024	-.00054	-.00022	.00035	-.00003

RUN NO. 797/ 0 RN/L = 3.29 GRADIENT INTERVAL = .00/ 12.00

ALPHAO	DZ	MACH	DX	DY	BETAO	PHI	ALPHAW	BETA	CY	CLN	CSL
14.589	1.523	.59940	-2.24660	11.09770	.90490	7.50000	9.69240	-4.98790	.05970	-.01810	.02280
14.598	4.729	.60090	-2.68170	11.10310	.90410	7.50000	9.68750	-4.98930	.05930	-.01640	.02210
14.608	8.739	.60080	-3.22950	11.10210	.90100	7.50000	9.68610	-4.97690	.05660	-.01310	.02100
14.637	16.314	.59980	-4.26990	11.12770	.89130	7.50000	9.67900	-4.99560	.05560	-.00960	.01890
14.668	31.043	.59930	-6.28480	11.17200	.87570	7.50000	9.66570	-4.99090	.05800	-.00630	.01610
14.687	46.253	.60030	-8.38190	11.20280	.86730	7.50000	9.65840	-4.98970	.07830	-.01600	.01630
14.695	61.364	.60050	-10.46720	11.22980	.85990	7.50000	9.64990	-4.98740	.08400	-.01840	.01610
	GRADIENT	.00019	-.13623	.00057	-.00055	-.00000	-.00085	.00159	-.00044	.00070	-.00025

CA20 747/1 01 S1 CARRIER DATA (AGN083) (01 DEC 75)

REFERENCE DATA

SREF = 5500.0000 SQ.FT. XMRP = 1339.9000 IN.XC
LREF = 327.7800 IN. YMRP = .0000 IN.YC
BREF = 2348.0400 IN. ZMRP = 190.8000 IN.ZC
SCALE = .0300

PARAMETRIC DATA

ALPHAC =	8.000	BETAC =	-5.000
ELV-IB =	.000	ELV-OB =	3.000
ELEVON =	5.000	MACH =	.600
BETAO =	.000	PHI =	7.500
DX =	10.000	DY =	10.000

RUN NO. 753/ 0 RN/L = 3.25 GRADIENT INTERVAL = .00/ 12.00

ALPHAO	DZ	MACH	DX	DY	BETAO	PHI	ALPHAW	BETA	CY	CLN	CSL
10.157	-4.055	.59920	9.58440	12.02470	.35460	7.50000	9.72220	-4.97930	.07680	-.02010	.01580
10.183	-1.077	.59910	9.17960	12.01420	.36780	7.50000	9.72250	-4.99720	.07680	-.02000	.01620
10.217	3.434	.59910	8.55730	12.01330	.37270	7.50000	9.72190	-4.98040	.07660	-.01910	.01640
10.253	10.894	.59950	7.53340	12.03380	.36920	7.50000	9.72090	-4.99020	.07460	-.01670	.01600
10.325	26.227	.60000	5.40650	12.07790	.35530	7.50000	9.71850	-4.99130	.07620	-.01550	.01520
10.368	40.888	.59980	3.36780	12.10570	.34890	7.50000	9.71180	-4.99700	.08190	-.01770	.01510
10.380	47.654	.59990	2.42180	12.11250	.34450	7.50000	9.71230	-4.98090	.08400	-.01840	.01470
	GRADIENT	.00005	-.13725	.00275	-.00047	.00000	-.00013	-.00131	-.00027	.00032	-.00005

RUN NO. 754/ 0 RN/L = 3.25 GRADIENT INTERVAL = .00/ 12.00

ALPHAO	DZ	MACH	DX	DY	BETAO	PHI	ALPHAW	BETA	CY	CLN	CSL
14.464	-1.083	.59930	8.03390	11.93300	.92370	7.50000	9.74720	-4.98020	.06490	-.01950	.02030
14.477	1.853	.59970	7.63200	11.94050	.92590	7.50000	9.74680	-4.99710	.06390	-.01790	.01990
14.493	6.138	.59980	7.04460	11.94340	.92410	7.50000	9.74430	-4.98480	.06080	-.01440	.01930
14.525	13.721	.60080	6.00510	11.96290	.91650	7.50000	9.73740	-4.98940	.05580	-.00930	.01750
14.575	28.934	.60020	3.90070	12.00290	.89970	7.50000	9.72870	-4.99460	.05760	-.00610	.01510
14.596	44.022	.59940	1.80220	12.03180	.89130	7.50000	9.72270	-4.99150	.07670	-.01540	.01540
14.608	58.528	.60060	-.22260	12.06010	.88300	7.50000	9.71910	-4.99680	.08300	-.01800	.01510
	GRADIENT	.00002	-.13708	.00068	-.00042	.00000	-.00058	.00287	-.00072	.00082	-.00014

CA20 747/1 01 S1 CARRIER DATA (AGN084) (01 DEC 75)

REFERENCE DATA

SREF =	5500.0000 SQ.FT.	XMRP =	1339.9000 IN.XC		
LREF =	327.7800 IN.	YMRP =	.0000 IN.YC		
BREF =	2348.0400 IN.	ZMRP =	190.8000 IN.ZC		
SCALE =	.0300				

PARAMETRIC DATA

ALPHAC =	4.000	BETAC =	.000
ELV-IB =	.000	ELV-OB =	3.000
ELEVON =	5.000	MACH =	.600
BETAO =	.000	PHI =	7.500
DX =	.000	DY =	.000

RUN NO. 705/ 0 RN/L = 3.19 GRADIENT INTERVAL = .00/ 12.00

ALPHAO	DZ	MACH	DX	DY	BETAO	PHI	ALPHAW	BETA	CY	CLN	CSL
10.477	-.781	.59990	.78190	.11400	.33540	7.50000	5.94610	-.00740	-.02440	.00900	-.00250
10.470	1.431	.60020	.62900	.11610	.33470	7.50000	5.94350	-.00560	-.02040	.00700	-.00230
10.466	6.105	.59930	.30370	.12250	.33340	7.50000	5.93640	-.00330	-.01570	.00460	-.00190
10.472	13.569	.60000	-.21640	.13300	.33140	7.50000	5.92780	-.00960	-.01250	.00310	-.00160
10.485	28.308	.59960	-1.25130	.14890	.32590	7.50000	5.91880	-.00190	-.01140	.00320	-.00150
10.489	43.532	.59950	-2.31820	.15620	.32600	7.50000	5.90860	-.00070	-.00900	.00190	-.00090
10.490	47.201	.59940	-2.58010	.15820	.32490	7.50000	5.90960	-.00050	-.00900	.00180	-.00090
	GRADIENT	-.00019	-.06961	.00137	-.00028	-.00000	-.00152	.00049	.00101	-.00051	.00011

RUN NO. 704/ 0 RN/L = 3.19 GRADIENT INTERVAL = .00/ 12.00

ALPHAO	DZ	MACH	DX	DY	BETAO	PHI	ALPHAW	BETA	CY	CLN	CSL
15.435	6.448	.59970	-.69570	.16150	.97600	7.50000	5.86270	-.00920	-.02680	.01040	-.00300
15.428	9.304	.59980	-.89700	.16320	.97380	7.50000	5.85980	-.01440	-.02190	.00780	-.00310
15.423	12.875	.59960	-1.14210	.16420	.97360	7.50000	5.85340	-.01150	-.01620	.00470	-.00270
15.412	20.640	.59920	-1.67000	.17050	.96990	7.50000	5.83730	-.00340	-.01440	.00450	-.00230
15.415	36.108	.60000	-2.72220	.18780	.96590	7.50000	5.81930	-.00920	-.00970	.00250	-.00150
15.414	50.653	.59970	-3.71920	.19180	.96360	7.50000	5.80820	-.00090	-.00850	.00200	-.00110
14.600	60.670	.60080	-4.54030	.20570	.84990	7.50000	5.91280	.00730	-.00830	.00150	-.00090
15.413	65.386	.59960	-4.73040	.20630	.95590	7.50000	5.80070	-.00040	-.00780	.00140	-.00080
	GRADIENT	.00004	-.07049	.00060	-.00077	.00000	-.00102	-.00182	.00172	-.00091	-.00004

CA20 747/1 01 S1 CARRIER DATA (AGN085) (01 DEC 75)

REFERENCE DATA

SREF =	5500.0000 SQ.FT.	XMRP =	1339.9000 IN.XC		
LREF =	327.7800 IN.	YMRP =	.0000 IN.YC		
BREF =	2348.0400 IN.	ZMRP =	190.8000 IN.ZC		
SCALE =	.0300				

PARAMETRIC DATA

ALPHAC =	4.000	BETAC =	.000
ELV-IB =	.000	ELV-OB =	3.000
ELEVON =	5.000	MACH =	.600
BETAO =	.000	PHI =	7.500
DX =	10.000	DY =	.000

RUN NO. 686/ 0 RN/L = 3.25 GRADIENT INTERVAL = .00/ 12.00

ALPHAO	DZ	MACH	DX	DY	BETAO	PHI	ALPHAW	BETA	CY	CLN	CSL
10.398	-1.550	.59990	10.83680	.08910	.32620	7.50000	5.86960	.00820	-.02190	.00810	-.00220
10.383	1.373	.59990	10.63990	.09070	.32610	7.50000	5.86880	.00850	-.02100	.00780	-.00230
10.381	5.899	.59950	10.33220	.09770	.32520	7.50000	5.86370	.01110	-.01590	.00510	-.00180
10.388	13.274	.59930	9.82720	.10370	.32480	7.50000	5.85710	.01310	-.01170	.00300	-.00150
10.407	28.273	.59950	8.79640	.11890	.31960	7.50000	5.84670	.02070	-.01110	.00310	-.00140
10.420	43.578	.60000	7.73890	.13010	.31980	7.50000	5.83970	.01420	-.00870	.00190	-.00090
10.422	48.458	.59940	7.40080	.13490	.31810	7.50000	5.83800	.01410	-.00900	.00190	-.00090
	GRADIENT	-.00009	-.06799	.00155	-.00020	-.00000	-.00113	.00057	.00113	-.00050	.00011

RUN NO. 685/ 0 RN/L = 3.26 GRADIENT INTERVAL = .00/ 12.00

ALPHAO	DZ	MACH	DX	DY	BETAO	PHI	ALPHAW	BETA	CY	CLN	CSL
14.697	1.100	.59940	9.54250	.13260	.87920	7.50000	5.89750	-.00300	-.02660	.01130	-.00310
14.684	4.360	.60060	9.32210	.13590	.87860	7.50000	5.89530	-.00170	-.02470	.01000	-.00320
14.678	8.649	.60060	9.02890	.13720	.87880	7.50000	5.88960	.01030	-.01680	.00560	-.00250
14.673	16.181	.59930	8.51060	.15310	.87710	7.50000	5.87810	.00470	-.01280	.00350	-.00210
14.676	31.096	.60050	7.48510	.17240	.87330	7.50000	5.86330	.00570	-.00970	.00260	-.00150
14.684	46.169	.60080	6.44000	.16710	.87350	7.50000	5.85250	.01390	-.00900	.00210	-.00120
14.686	61.197	.59990	5.39690	.18170	.86570	7.50000	5.84350	.01430	-.00840	.00160	-.00090
	GRADIENT	.00015	-.05805	.00059	-.00005	-.00000	-.00106	.00181	.00133	-.00077	.00008

CA20 747/1 01 S1 CARRIER DATA (AGN086) (01 DEC 75)

REFERENCE DATA

SREF =	5500.0000 SQ.FT.	XMRP =	1339.9000 IN.XC
LREF =	327.7800 IN.	YMRP =	.0000 IN.YC
BREF =	2348.0400 IN.	ZMRP =	190.8000 IN.ZC
SCALE =	.0300		

PARAMETRIC DATA

ALPHAC =	8.000	BETAC =	.000
ELV-IB =	.000	ELV-OB =	3.000
ELEVON =	5.000	MACH =	.600
BETAO =	.000	PHI =	7.500
DX =	.000	DY =	.000

RUN NO. 702/ 0 RN/L = 3.21 GRADIENT INTERVAL = .00/ 12.00

ALPHAO	DZ	MACH	DX	DY	BETAO	PHI	ALPHAH	BETA	CY	CLN	CSL
10.331	-1.338	.59930	-.84120	.06700	.33000	7.50000	9.69480	-.00030	-.01730	.00390	-.00130
10.340	1.740	.60000	-1.25560	.07150	.33130	7.50000	9.69390	-.00040	-.01620	.00390	-.00120
10.363	6.289	.60070	-1.87580	.08170	.33280	7.50000	9.68910	-.00010	-.01450	.00360	-.00110
10.396	13.806	.60030	-2.90490	.09630	.33230	7.50000	9.68730	.00010	-.01330	.00340	-.00110
10.462	28.633	.60060	-4.95180	.12610	.32950	7.50000	9.68090	.00860	-.01100	.00270	-.00100
10.485	43.486	.60040	-7.00390	.14140	.33000	7.50000	9.67620	.00150	-.01010	.00210	-.00070
10.489	47.086	.59950	-7.50170	.14340	.32810	7.50000	9.67300	.00920	-.01030	.00220	-.00050
	GRADIENT	.00015	-.13634	.00224	.00033	.00000	-.00106	.00007	.00037	-.00007	.00002

RUN NO. 703/ 0 RN/L = 3.20 GRADIENT INTERVAL = .00/ 12.00

ALPHAO	DZ	MACH	DX	DY	BETAO	PHI	ALPHAH	BETA	CY	CLN	CSL
14.513	1.005	.60000	-2.17580	.11060	.86590	7.50000	9.72400	-.01250	-.02380	.00810	-.00250
14.522	4.003	.59980	-2.58520	.11270	.86730	7.50000	9.71980	-.00330	-.02020	.00650	-.00210
14.535	8.390	.60090	-3.18350	.12190	.86560	7.50000	9.71600	-.00140	-.01620	.00460	-.00190
14.550	15.842	.59970	-4.20120	.13390	.86250	7.50000	9.70760	-.00040	-.01310	.00360	-.00170
15.384	35.410	.59990	-6.93850	.15790	.96430	7.50000	9.69510	.00020	-.01140	.00310	-.00150
15.397	50.740	.60030	-9.05870	.17100	.96420	7.50000	9.68670	.00140	-.00920	.00190	-.00100
15.398	65.244	.60010	-11.07430	.19330	.95630	7.50000	9.68350	.00140	-.00950	.00200	-.00080
	GRADIENT	.00013	-.13645	.00157	-.00019	-.00000	-.00107	.00142	.00102	-.00047	.00008

CA20 747/1 01 S1 CARRIER DATA (AGN087) 1 01 DEC 75 1

REFERENCE DATA

SREF = 5500.0000 SQ.FT. XMRP = 1339.9000 IN.XC
LREF = 327.7800 IN. YMRP = .0000 IN.YC
BREF = 2348.0400 IN. ZMRP = 190.8000 IN.ZC
SCALE = .0300

PARAMETRIC DATA

ALPHAC =	8.000	BETAC =	.000
ELV-IB =	.000	ELV-OB =	3.000
ELEVON =	5.000	MACH =	.600
BETAO =	.000	PHI =	7.500
DX =	10.000	DY =	.000

RUN NO. 683/ 0 RN/L = 3.27 GRADIENT INTERVAL = .00/ 12.00

ALPHAO	DZ	MACH	DX	DY	BETAO	PHI	ALPHAH	BETA	CY	CLN	CSL
10.202	-2.846	.60070	9.42630	.05380	.30970	7.50000	9.72550	.00720	-.01680	.00360	-.00030
10.212	.552	.60020	8.96280	.05120	.31500	7.50000	9.72650	.01490	-.01530	.00360	-.00030
10.232	4.877	.60020	8.36890	.05670	.31740	7.50000	9.72560	.01510	-.01390	.00340	-.00050
10.267	12.472	.59990	7.32440	.07370	.31830	7.50000	9.72090	.00760	-.01260	.00310	-.00050
10.343	27.592	.59930	5.22440	.09540	.31840	7.50000	9.71640	.02330	-.01150	.00290	-.00050
10.377	42.540	.60030	3.14850	.11600	.31820	7.50000	9.71420	.01650	-.00950	.00210	.00010
10.387	48.934	.60050	2.25810	.12250	.31670	7.50000	9.71250	.01650	-.01010	.00210	.00060
	GRADIENT	.00000	-.13731	.00127	.00055	.00000	-.00021	.00005	.00032	-.00005	-.00005

RUN NO. 684/ 0 RN/L = 3.26 GRADIENT INTERVAL = .00/ 12.00

ALPHAO	DZ	MACH	DX	DY	BETAO	PHI	ALPHAH	BETA	CY	CLN	CSL
14.557	-1.221	.59970	8.03810	.07550	.87510	7.50000	9.75080	.00290	-.02270	.00760	-.00150
14.563	1.801	.59960	7.63010	.08390	.87580	7.50000	9.75280	.00360	-.02080	.00700	-.00190
14.564	6.393	.59920	7.00370	.08780	.87610	7.50000	9.74630	.01280	-.01740	.00540	-.00160
14.590	13.985	.59980	5.83410	.10350	.87480	7.50000	9.74190	.01410	-.01390	.00400	-.00170
14.632	28.717	.60040	3.93720	.13370	.87070	7.50000	9.73190	.01500	-.01140	.00320	-.00170
14.655	43.772	.59920	1.84850	.14770	.87100	7.50000	9.72470	.01620	-.00910	.00200	-.00130
14.654	48.457	.59900	1.19860	.14870	.86940	7.50000	9.72120	.02410	-.00930	.00190	-.00100
14.666	53.011	.59990	.56350	.15680	.86900	7.50000	9.72150	.01640	-.00920	.00190	-.00110
	GRADIENT	-.00009	-.13640	.00085	.00007	.00000	-.00142	.00200	.00074	-.00035	.00007

CA20 747/1 01 S1 CARRIER DATA (AGN0881 1 01 DEC 75)

REFERENCE DATA

SREF = 5500.0000 SQ.FT. XMRP = 1339.9000 IN.XC
LREF = 327.7800 IN. YMRP = .0000 IN.YC
BREF = 2348.0400 IN. ZMRP = 190.8000 IN.ZC
SCALE = .0300

PARAMETRIC DATA

ALPHAC =	4.000	BETAC =	.000
ELV-IB =	.000	ELV-OB =	3.000
ELEVON =	5.000	MACH =	.600
BETAO =	.000	PHI =	7.500
DX =	.000	DY =	10.000

RUN NO. 790/ 0 RN/L = 3.35 GRADIENT INTERVAL = .00/ 12.00

ALPHAO	DZ	MACH	DX	DY	BETAO	PHI	ALPHAW	BETA	CY	CLN	CSL
10.555	.254	.60080	.71130	10.12070	.35260	7.50000	5.84990	.00050	-.02740	.00070	.00590
10.549	3.398	.59950	.49520	10.11910	.35390	7.50000	5.84950	-.00680	-.02260	.00010	.00510
10.551	7.733	.60010	.20180	10.11940	.35340	7.50000	5.84070	.00080	-.01940	.00030	.00420
10.556	15.401	.60060	-.31960	10.12750	.35020	7.50000	5.83350	-.00960	-.02020	.00310	.00260
10.567	30.165	.60090	-1.32880	10.14530	.33860	7.50000	5.82300	.00410	-.01910	.00500	.00120
10.572	45.459	.59920	-2.38060	10.15660	.33400	7.50000	5.81600	.00450	-.01570	.00450	.00030
10.573	47.767	.59990	-2.54180	10.16140	.33220	7.50000	5.81730	-.00320	-.01570	.00450	.00030
	GRADIENT	-.00008	-.06810	-.00016	.00009	-.00000	-.00128	.00014	.00105	-.00005	-.00023

RUN NO. 793/ 0 RN/L = 3.32 GRADIENT INTERVAL = .00/ 12.00

ALPHAO	DZ	MACH	DX	DY	BETAO	PHI	ALPHAW	BETA	CY	CLN	CSL
14.705	1.985	.60000	-.34990	10.14030	.88850	7.50000	5.86510	-.00700	-.03970	.00030	.01000
14.705	4.790	.59970	-.54980	10.14100	.88850	7.50000	5.86030	-.00760	-.03480	.00090	.00840
14.694	8.916	.59960	-.83550	10.14240	.88720	7.50000	5.85670	-.00950	-.03270	.00280	.00660
14.687	16.371	.59920	-1.34730	10.15560	.88140	7.50000	5.84520	-.00660	-.03450	.00820	.00380
14.692	31.267	.60010	-2.36750	10.18500	.87110	7.50000	5.82820	-.01420	-.02740	.00800	.00140
14.697	46.547	.59960	-3.41780	10.19680	.86680	7.50000	5.81760	-.01260	-.02100	.00630	.00070
14.696	61.277	.59940	-4.42800	10.21090	.85990	7.50000	5.80770	-.00330	-.01620	.00460	.00030
	GRADIENT	-.00006	-.07000	.00031	-.00020	-.00000	-.00119	-.00037	.00097	.00037	-.00049

ORIGINAL PAGE IS
OF POOR QUALITY

CA20 747/1 01 S1 CARRIER DATA (AGN089) (01 DEC 75)

REFERENCE DATA

SREF = 5500.0000 SQ.FT. XMRP = 1339.9000 IN.XC
LREF = 327.7800 IN. YMRP = .0000 IN.YC
BREF = 2348.0400 IN. ZMRP = 190.8000 IN.ZC
SCALE = .0300

PARAMETRIC DATA

ALPHAC =	4.000	BETAC =	.000
ELV-IB =	.000	ELV-OB =	3.000
ELEVON =	5.000	MACH =	.600
BETAO =	.000	PHI =	7.500
DX =	10.000	DY =	10.000

RUN NO. 748/ 0 RN/L = 3.31 GRADIENT INTERVAL = .00/ 12.00

ALPHAO	DZ	MACH	DX	DY	BETAO	PHI	ALPHAW	BETA	CY	CLN	CSL
10.378	-1.632	.60020	10.85360	10.09140	.36670	7.50000	5.85880	.00020	-.02340	.00050	.00470
10.387	1.664	.60010	10.62560	10.08940	.36940	7.50000	5.85350	.00820	-.01990	.00020	.00390
10.394	6.264	.60010	10.30850	10.09400	.37000	7.50000	5.85260	.00070	-.01690	-.00010	.00320
10.402	13.375	.60060	9.82330	10.10030	.36640	7.50000	5.84730	-.00140	-.01780	.00220	.00210
10.423	28.632	.60090	8.77710	10.11670	.35660	7.50000	5.83630	.00390	-.01860	.00480	.00070
10.434	43.683	.60070	7.73850	10.12950	.34900	7.50000	5.82970	.01160	-.01650	.00480	-.00010
10.431	47.354	.60030	7.48270	10.13340	.34760	7.50000	5.83090	.01190	-.01530	.00440	-.00010
	GRADIENT	.00000	-.06894	.00100	.00013	.00000	-.00020	-.00163	.00065	-.00007	-.00015

RUN NO. 751/ 0 RN/L = 3.25 GRADIENT INTERVAL = .00/ 12.00

ALPHAO	DZ	MACH	DX	DY	BETAO	PHI	ALPHAW	BETA	CY	CLN	CSL
14.603	-.240	.59960	9.65580	10.10520	.91100	7.50000	5.88620	.00130	-.03160	-.00090	.00830
14.595	2.648	.59970	9.45510	10.10780	.91230	7.50000	5.88670	.00110	-.02750	-.00070	.00720
14.596	7.191	.59940	9.14070	10.11050	.91150	7.50000	5.88310	-.00120	-.02750	.00180	.00570
14.595	14.612	.59970	8.63500	10.12720	.90760	7.50000	5.87400	-.01480	-.03270	.00810	.00320
14.603	29.756	.59940	7.58700	10.15000	.89650	7.50000	5.85730	.00120	-.02560	.00760	.00120
14.611	44.626	.59900	6.55800	10.17050	.89130	7.50000	5.84810	-.00560	-.02100	.00660	.00030
14.611	59.694	.59980	5.51570	10.18640	.88330	7.50000	5.83880	-.00370	-.01580	.00460	.00000
	GRADIENT	-.00007	-.06921	.00059	-.00018	.00000	-.00079	-.00051	.00000	.00055	-.00033

CA20 747/1 01 SI CARRIER DATA (AGN090) (01 DEC 75)

REFERENCE DATA

SREF = 5500.0000 SQ.FT. XMRP = 1339.9000 IN.XC
LREF = 327.7800 IN. YMRP = .0000 IN.YC
BREF = 2348.0400 IN. ZMRP = 190.8000 IN.ZC
SCALE = .0300

PARAMETRIC DATA

ALPHAC = 8.000 BETAC = .000
ELV-IB = .000 ELV-OB = 3.000
ELEVON = 5.000 MACH = .600
BETAO = .000 PHI = 7.500
DX = .000 DY = 10.000

RUN NO. 799/ 0 RN/L = 3.28 GRADIENT INTERVAL = .00/ 12.00

ALPHAO	DZ	MACH	DX	DY	BETAO	PHI	ALPHAH	BETA	CY	CLN	CSL
10.357	-.035	.60030	-1.02460	10.11350	.32780	7.50000	9.66040	.01350	-.02260	-.00250	.00220
10.375	3.161	.59960	-1.45630	10.10060	.33860	7.50000	9.65910	.00480	-.02030	-.00160	.00200
10.396	7.497	.60020	-2.04560	10.09530	.34380	7.50000	9.65930	.00230	-.02100	.00100	.00168
10.435	14.798	.60070	-3.04220	10.09790	.34630	7.50000	9.65560	.00100	-.01960	.00250	.00110
10.494	29.812	.59910	-5.10530	10.11650	.34030	7.50000	9.64940	.01370	-.02000	.00540	.00000
10.518	45.359	.59950	-7.24650	10.13900	.33420	7.50000	9.64690	.00730	-.01530	.00400	-.00060
10.522	47.338	.60020	-7.51750	10.14290	.33230	7.50000	9.64400	.00760	-.01450	.00370	-.00040
	GRADIENT	.00014	-.13591	-.00122	.00120	.00000	.00005	-.00058	-.00016	.00060	-.00009

RUN NO. 796/ 0 RN/L = 3.29 GRADIENT INTERVAL = .00/ 12.00

ALPHAO	DZ	MACH	DX	DY	BETAO	PHI	ALPHAH	BETA	CY	CLN	CSL
14.594	1.481	.59950	-2.22770	10.14370	.87480	7.50000	9.69560	-.00300	-.03600	-.00190	.00690
14.602	4.549	.59900	-2.64420	10.13000	.88110	7.50000	9.69070	-.00590	-.03560	.00120	.00580
14.617	8.657	.59930	-3.20750	10.11860	.88520	7.50000	9.68790	-.00250	-.03780	.00590	.00460
14.642	16.518	.59980	-4.27940	10.12340	.88400	7.50000	9.67930	.00160	-.03700	.00980	.00260
14.671	31.266	.59980	-6.30190	10.14970	.87470	7.50000	9.66690	-.00270	-.02330	.00610	.00120
14.687	46.167	.60010	-8.35180	10.17100	.86860	7.50000	9.65650	-.00210	-.01950	.00560	.00000
14.696	61.030	.60020	-10.40650	10.19280	.86220	7.50000	9.65050	.00750	-.01380	.00370	-.00050
	GRADIENT	-.00002	-.13657	-.00346	.00142	.00000	-.00105	.00011	-.00027	.00109	-.00032

CA20 747/1 01 SI CARRIER DATA (AGN091) (01 DEC 75)

REFERENCE DATA

SREF = 5500.0000 SQ.FT. XMRP = 1339.9000 IN.XC
LREF = 327.7800 IN. YMRP = .0000 IN.YC
BREF = 2348.0400 IN. ZMRP = 190.8000 IN.ZC
SCALE = .0300

PARAMETRIC DATA

ALPHAC = 8.000 BETAC = .000
ELV-IB = .000 ELV-OB = 3.000
ELEVON = 5.000 MACH = .600
BETAO = .000 PHI = 7.500
DX = 10.000 DY = 10.000

RUN NO. 749/ 0 RN/L = 3.28 GRADIENT INTERVAL = .00/ 12.00

ALPHAO	DZ	MACH	DX	DY	BETAO	PHI	ALPHAW	BETA	CY	CLN	CSL
10.211	-2.473	.60010	9.37070	10.09490	.34320	7.50000	9.73370	.00410	-.02240	-.00100	-.00048
10.231	.684	.59940	8.93780	10.08320	.35240	7.50000	9.73220	.00470	-.01810	-.00170	-.00050
10.254	5.170	.59950	8.32140	10.07530	.36020	7.50000	9.73090	.00260	-.01840	.00040	-.00080
10.284	12.734	.59930	7.28040	10.07600	.36200	7.50000	9.72830	.00110	-.01810	.00210	-.00110
10.350	27.679	.59950	5.20360	10.09700	.35550	7.50000	9.72610	.00560	-.02020	.00550	-.00200
10.390	42.827	.59970	3.09470	10.11470	.35150	7.50000	9.7.980	.00660	-.01650	.00450	-.00220
10.396	47.827	.60050	2.39640	10.12240	.34830	7.50000	9.72100	.00690	-.01540	.00420	-.00220
	GRADIENT	.00002	-.13739	-.00176	.00174	-.00000	-.00029	-.00047	-.00007	.00047	-.00007

RUN NO. 750/ 0 RN/L = 3.26 GRADIENT INTERVAL = .00/ 12.00

ALPHAO	DZ	MACH	DX	DY	BETAO	PHI	ALPHAW	BETA	CY	CLN	CSL
14.458	-1.845	.59970	8.15120	10.11780	.89550	7.50000	9.75910	.00240	-.03710	.00060	.00390
14.468	1.617	.59960	7.67690	10.10740	.90290	7.50000	9.75870	.00250	-.03190	.00030	.00310
14.487	6.361	.60050	7.02750	10.09550	.90700	7.50000	9.75520	.01360	-.03410	.00500	.00180
14.517	13.973	.60060	5.97980	10.09910	.90650	7.50000	9.74700	.00160	-.03590	.00950	.00030
14.559	28.740	.60010	3.93560	10.12300	.89680	7.50000	9.73940	.00370	-.02570	.00740	-.00090
14.582	41.006	.59970	2.22730	10.13620	.89270	7.50000	9.73390	-.00330	-.02140	.00660	-.00170
14.586	42.477	.60050	2.02840	10.13900	.89110	7.50000	9.72820	-.00310	-.02090	.00650	-.00190
14.596	58.866	.59920	-.26060	10.16340	.88240	7.50000	9.72500	-.00120	-.01580	.00440	-.00200
	GRADIENT	.00019	-.13689	-.00251	.00086	.00000	-.00074	.00234	-.00046	.00099	-.00027

CA20 7x7/1 01 S1 CARRIER DATA (AGN092) (01 DEC 75)

REFERENCE DATA

SREF =	5500.0000 SQ.FT.	XMRP =	1339.9000	IN.XC	
LREF =	327.7800 IN.	YMRP =	.0000	IN.YC	
BREF =	2348.0400 IN.	ZMRP =	190.8000	IN.ZC	
SCALE =	.0300				

PARAMETRIC DATA

ALPHAC =	4.000	BETAC =	5.000
ELV-IB =	.000	ELV-OB =	3.000
ELEVON =	5.000	MACH =	.600
BETAO =	.000	PHI =	7.500
DX =	.000	DY =	10.000

RUN NO. 789/ 0 RN/L = 3.37 GRADIENT INTERVAL = .00/ 12.00

ALPHAO	DZ	MACH	DX	DY	BETAO	PHI	ALPHAW	BETA	CY	CLN	CSL
10.577	-.150	.59980	.72100	8.96510	.36680	7.50000	5.84990	4.98850	-.12970	.02110	-.00910
10.565	3.389	.60030	.48160	8.96960	.36070	7.50000	5.84670	4.98640	-.12750	.02320	-.01030
10.564	7.766	.60060	.18390	8.97340	.35770	7.50000	5.83930	4.98560	-.12450	.02410	-.01120
10.561	15.573	.59950	-.34810	8.97980	.35300	7.50000	5.83440	4.96720	-.12460	.02720	-.01250
10.569	30.037	.59900	-1.33700	8.99030	.34320	7.50000	5.82300	4.97980	-.12450	.03030	-.01410
10.574	45.241	.60010	-2.37860	9.00170	.33720	7.50000	5.81630	4.98170	-.11800	.02810	-.01450
10.574	47.768	.59970	-2.55580	9.00290	.33650	7.50000	5.81790	4.98180	-.11780	.02810	-.01450
	GRADIENT	.00007	-.06801	.00087	-.00069	-.00000	-.00169	-.00018	.00069	.00021	-.00021

RUN NO. 794/ 0 RN/L = 3.31 GRADIENT INTERVAL = .00/ 12.00

ALPHAO	DZ	MACH	DX	DY	BETAO	PHI	ALPHAW	BETA	CY	CLN	CSL
14.741	1.968	.59930	-.37430	9.07530	.89280	7.50000	5.86070	5.00420	-.13680	.02060	-.00610
14.723	4.532	.59980	-.55020	9.07210	.89060	7.50000	5.85950	5.00880	-.13680	.02380	-.00760
14.712	8.966	.60060	-.85330	9.07150	.88960	7.50000	5.85570	5.01510	-.13310	.02530	-.00970
14.701	16.604	.59970	-1.37350	9.08220	.88480	7.50000	5.84130	5.00370	-.13270	.02940	-.01180
14.695	31.346	.60060	-2.39170	9.10610	.87490	7.50000	5.82510	5.00290	-.12650	.03020	-.01340
14.699	46.685	.59970	-3.43760	9.11960	.86940	7.50000	5.81480	4.99540	-.12230	.03000	-.01430
14.698	61.405	.60010	-4.45100	9.13090	.86330	7.50000	5.80750	5.00490	-.11770	.02810	-.01440
	GRADIENT	.00019	-.06844	-.00050	-.00043	-.00000	-.00073	.00154	.00056	.00063	-.00051

ORIGINAL PAGE IS
OF POOR QUALITY

CA20 747/1 01 S1 CARRIER DATA (AGN093) (01 DEC 75)

REFERENCE DATA

SREF = 5500.0000 SQ.FT. XMRP = 1339.9000 IN.XC
LREF = 327.7800 IN. YMRP = .0000 IN.YC
BREF = 2348.0400 IN. ZMRP = 190.8000 IN.ZC
SCALE = .0300

PARAMETRIC DATA

ALPHAC = 4.000 BETAC = 5.000
ELV-IB = .000 ELV-OB = 3.000
ELEVON = 5.000 MACH = .600
BETAO = .000 PHI = 7.500
DX = 10.000 DY = 10.000

RUN NO. 758/ 0 RN/L = 3.27 GRADIENT INTERVAL = .00/ 12.00

ALPHAO	DZ	MACH	DX	DY	BETAO	PHI	ALPHAW	BETA	CY	CLN	CSL
10.407	-1.572	.60030	10.83100	8.07640	.37780	7.50000	5.85840	4.98230	-.12360	.02010	-.01060
10.397	1.296	.60000	10.63680	8.07760	.37490	7.50000	5.85760	4.98060	-.12260	.02190	-.01140
10.396	5.872	.60080	10.32570	8.08270	.37180	7.50000	5.85460	4.97180	-.12070	.02300	-.01210
10.403	13.650	.60030	9.79170	8.08480	.36790	7.50000	5.85130	4.96920	-.12150	.02580	-.01310
10.415	28.531	.59970	8.76850	8.09390	.35840	7.50000	5.84310	4.97310	-.12360	.02980	-.01460
10.423	43.642	.60020	7.72630	8.10690	.35200	7.50000	5.83760	4.97480	-.11780	.02800	-.01500
10.426	47.246	.60080	7.47400	8.11120	.34990	7.50000	5.83890	4.97490	-.11720	.02780	-.01500
	GRADIENT	.00017	-.06799	.00111	-.00068	.00000	-.00066	-.00192	.00042	.00024	-.00015

RUN NO. 759/ 0 RN/L = 3.24 GRADIENT INTERVAL = .00/ 12.00

ALPHAO	DZ	MACH	DX	DY	BETAO	PHI	ALPHAW	BETA	CY	CLN	CSL
14.648	-.347	.60040	9.63370	8.18350	.91470	7.50000	5.88520	4.98300	-.12810	.01890	-.00790
14.628	2.762	.60080	9.42610	8.18750	.91280	7.50000	5.87930	4.97890	-.13020	.02330	-.00980
14.615	7.144	.59940	9.12810	8.18710	.91230	7.50000	5.87670	4.97800	-.12770	.02440	-.01090
14.606	14.929	.59920	8.60060	8.19200	.90870	7.50000	5.86460	4.97460	-.12860	.02820	-.01270
14.610	29.445	.59910	7.60310	8.22120	.90000	7.50000	5.85130	4.96530	-.12520	.02990	-.01400
14.615	44.674	.59940	6.55210	8.23570	.89450	7.50000	5.83930	4.96520	-.12230	.03000	-.01480
14.618	59.607	.59920	5.51130	8.25220	.88490	7.50000	5.83790	4.97470	-.11750	.02810	-.01500
	GRADIENT	-.00032	-.06800	-.00009	-.00011	-.00000	-.00059	-.00021	.00057	.00025	-.00025

CA20 747/1 01 S1 CARRIER DATA (AGNOSH) (01 DEC 75)

REFERENCE DATA

SREF =	5500.0000 SQ.FT.	XMRP =	1339.9000 IN.XC		
LREF =	327.7600 IN.	YMRP =	.0000 IN.YC		
BREF =	2348.0400 IN.	ZMRP =	190.8000 IN.ZC		
SCALE =	.0300				

PARAMETRIC DATA

ALPHAC =	8.000	BETAC =	5.000
ELV-IB =	.000	ELV-OB =	3.000
ELEVON =	5.000	MACH =	.600
BETAO =	.000	PHI =	7.500
DX =	.000	DY =	10.000

RUN NO. 800/ 0 RN/L = 3.28 GRADIENT INTERVAL = .00/ 12.00

ALPHAO	DZ	MACH	DX	DY	BETAO	PHI	ALPHAW	BETA	CY	CLN	CSL
10.383	-.121	.59930	-1.02330	8.91870	.34720	7.50000	9.65660	4.99450	-.12350	.01720	-.01100
10.394	3.280	.59930	-1.48700	8.91930	.34590	7.50000	9.65730	4.99140	-.12270	.02050	-.01230
10.408	7.350	.60060	-2.03700	8.91600	.34470	7.50000	9.65340	5.00470	-.12160	.02260	-.01300
10.448	15.415	.59950	-3.14280	8.91490	.34670	7.50000	9.65240	4.99410	-.12090	.02570	-.01420
10.505	30.092	.60000	-5.16010	8.92890	.34150	7.50000	9.64660	5.00160	-.11550	.02580	-.01520
10.523	45.305	.59990	-7.25270	8.94660	.33540	7.50000	9.64150	4.98740	-.11100	.02460	-.01570
10.526	47.357	.60070	-7.53260	8.94780	.33480	7.50000	9.63840	4.99510	-.11090	.02460	-.01580
	GRADIENT	.00032	-.13514	-.00081	-.00029	.00000	-.00098	.00327	.00027	.00052	-.00017

RUN NO. 795/ 0 RN/L = 3.30 GRADIENT INTERVAL = .00/ 12.00

ALPHAO	DZ	MACH	DX	DY	BETAO	PHI	ALPHAW	BETA	CY	CLN	CSL
14.609	1.223	.59980	-2.21010	9.06050	.87620	7.50000	9.69330	4.97390	-.14140	.02230	-.00800
14.604	4.295	.60010	-2.62530	9.04320	.87780	7.50000	9.68930	4.98640	-.14010	.02540	-.00930
14.610	9.099	.60030	-3.27870	9.02810	.88110	7.50000	9.69390	4.99180	-.13690	.02790	-.01030
14.633	16.424	.59900	-4.27540	9.03250	.88090	7.50000	9.67580	4.98360	-.13020	.02840	-.01270
14.673	31.163	.60010	-6.30030	9.04260	.87580	7.50000	9.66440	4.99120	-.12280	.02850	-.01450
14.686	46.448	.59990	-8.40360	9.06230	.87040	7.50000	9.65340	4.97790	-.11510	.02620	-.01540
14.698	61.101	.60050	-10.43360	9.08130	.86590	7.50000	9.64950	4.98680	-.11200	.02510	-.01580
	GRADIENT	.00006	-.13571	-.00403	.00063	-.00000	-.00119	.00217	.00058	.00069	-.00028

CA20 747/1 01 S1 CARRIER DATA (AGN095) (01 DEC 75)

REFERENCE DATA

SREF = 6500.0000 SQ.FT. XMRP = 1339.9000 IN.XC
LREF = 327.7800 IN. YMRP = .0000 IN.YC
BREF = 2348.0400 IN. ZMRP = 190.8000 IN.ZC
SCALE = .0300

PARAMETRIC DATA

ALPHAC = 8.000 BETAC = 5.000
ELV-IB = .000 ELV-OB = 3.000
ELEVON = 5.000 MACH = .600
BETAO = .000 PHI = 7.500
DX = 10.000 DY = 10.000

RUN NO. 757/ 0 RN/L = 3.26 GRADIENT INTERVAL = .00/ 12.00

ALPHAO	DZ	MACH	DX	DY	BETAO	PHI	ALPHAW	BETA	CY	CLN	CSL
10.229	-2.945	.60060	8.43320	8.02160	.36630	7.50000	9.72940	4.98930	-.11980	.01550	-.00870
10.238	.916	.59990	8.90030	8.02590	.36290	7.50000	9.72990	4.97780	-.12060	.01950	-.00880
10.254	5.217	.59920	8.30880	8.02100	.36370	7.50000	9.72940	4.98330	-.11990	.02180	-.00930
10.286	12.241	.60010	7.33910	8.02610	.36490	7.50000	9.72730	4.96470	-.12110	.02510	-.00990
10.352	27.562	.60020	5.20990	8.03700	.35920	7.50000	9.72460	4.97830	-.11910	.02780	-.01100
10.383	42.621	.59970	3.12000	8.05510	.35360	7.50000	9.71610	4.97170	-.11440	.02580	-.01140
10.385	47.697	.59990	2.41280	8.05700	.35090	7.50000	9.71670	4.97960	-.11400	.02570	-.01140
	GRADIENT	-.00016	-.13752	-.00114	.00019	.00000	-.00012	.00128	.00016	.00053	-.00012

RUN NO. 758/ 0 RN/L = 3.26 GRADIENT INTERVAL = .00/ 12.00

ALPHAO	DZ	MACH	DX	DY	BETAO	PHI	ALPHAW	BETA	CY	CLN	CSL
14.510	-1.170	.60020	8.03630	8.17130	.90250	7.50000	9.75370	4.98380	-.13380	.02090	-.00890
14.504	1.917	.60050	7.62130	8.16420	.90580	7.50000	9.75550	4.97220	-.13570	.02500	-.00960
14.507	6.286	.59960	7.02320	8.15640	.90740	7.50000	9.75180	4.96980	-.13470	.02760	-.01050
14.530	13.848	.60020	5.98650	8.14470	.90720	7.50000	9.74450	4.98380	-.13050	.02900	-.01130
14.567	28.243	.60030	3.86020	8.15720	.90150	7.50000	9.73420	4.97640	-.12350	.02870	-.01080
14.594	43.847	.60080	1.82560	8.17000	.89540	7.50000	9.73000	4.97790	-.11790	.02720	-.01120
14.605	58.656	.60070	-.24170	8.19240	.88780	7.50000	9.72470	4.97150	-.11400	.02590	-.01140
	GRADIENT	-.00021	-.13690	-.00179	.00037	.00000	-.00085	-.00055	.00023	.00060	-.00023

CA20 747/1 01 S1 CARRIER DATA (AGN096) (01 DEC 75)

REFERENCE DATA

SREF =	5500.0000 SQ.FT.	XMRP =	1339.9000 IN.XC		
LREF =	327.7800 IN.	YMRP =	.0000 IN.YC		
BREF =	2348.0400 IN.	ZMRP =	190.6000 IN.ZC		
SCALE =	.0300				

PARAMETRIC DATA

ALPHAC =	4.000	BETAC =	-5.000
ELV-IB =	.000	ELV-OB =	3.000
ELEVON =	5.000	MACH =	.600
BETAO =	-5.000	PHI =	7.500
DX =	.000	DY =	10.000

RUN NO. 804/ 0 RN/L = 3.28 GRADIENT INTERVAL = .00/ 12.00

ALPHAO	DZ	MACH	DX	DY	BETAO	PHI	ALPHAW	BETA	CY	CLN	CSL
10.581	.639	.59990	.65310	11.60330	-4.90570	7.50000	5.85380	-4.99080	.07360	-.01720	.01690
10.577	3.578	.59970	.45410	11.60440	-4.90260	7.50000	5.84720	-4.98290	.07530	-.01740	.01700
10.576	7.654	.60050	.16150	11.61590	-4.90650	7.50000	5.84590	-4.97530	.07710	-.01730	.01680
10.583	15.309	.60030	-.34730	11.63520	-4.91210	7.50000	5.83640	-4.98310	.07910	-.01720	.01590
10.601	30.620	.60070	-1.40130	11.66810	-4.92520	7.50000	5.82710	-4.97290	.08730	-.01990	.01540
10.617	45.347	.60010	-2.42020	11.69410	-4.93890	7.50000	5.81980	-4.97990	.09040	-.02070	.01480
10.614	47.836	.59960	-2.59130	11.68650	-4.93060	7.50000	5.81890	-4.97190	.09170	-.02110	.01470
	GRADIENT	.00009	-.06915	.00181	-.00017	.00000	-.00104	.00212	.00048	-.00001	-.00002

RUN NO. 805/ 0 RN/L = 3.29 GRADIENT INTERVAL = .00/ 12.00

ALPHAO	DZ	MACH	DX	DY	BETAO	PHI	ALPHAW	BETA	CY	CLN	CSL
14.802	1.971	.60070	-.39910	11.58740	-4.33990	7.50000	5.87980	-4.99520	.05470	-.01250	.02000
14.786	4.974	.60090	-.60690	11.58650	-4.33580	7.50000	5.87760	-4.98020	.05630	-.01200	.02030
14.775	9.438	.59980	-.91750	11.59210	-4.33820	7.50000	5.87070	-4.97870	.06220	-.01370	.01950
14.774	16.557	.60050	-1.40750	11.61020	-4.34400	7.50000	5.86150	-4.98720	.06460	-.01270	.01790
14.779	31.753	.60030	-2.45270	11.64460	-4.35890	7.50000	5.84370	-4.98040	.07060	-.01170	.01500
14.774	47.052	.60020	-3.50320	11.68200	-4.36560	7.50000	5.82950	-4.98910	.08630	-.01910	.01540
14.772	61.438	.59970	-4.49930	11.67880	-4.37510	7.50000	5.82190	-4.97970	.09070	-.02100	.01510
	GRADIENT	-.00013	-.06943	.00068	.00019	.00000	-.00112	.00207	.00103	-.00018	-.00008

CA20 747/1 01 S1 CARRIER DATA (AGN097) (01 DEC 75)

REFERENCE DATA

SREF = 5500.0000 SQ.FT. XMRP = 1339.9000 IN.XC
LREF = 327.7800 IN. YMRP = .0000 IN.YC
BREF = 2348.0400 IN. ZMRP = 190.8000 IN.ZC
SCALE = .0300

PARAMETRIC DATA

ALPHAC =	8.000	BETAC =	-5.000
ELV-IB =	.000	ELV-OB =	3.000
ELEVON =	5.000	MACH =	.600
BETAO =	-5.000	PHI =	7.500
DX =	.000	DY =	10.000

RUN NO. 811/ 0 RN/L = 3.26 GRADIENT INTERVAL = .00/ 12.00

ALPHAO	DZ	MACH	DX	DY	BETAO	PHI	ALPHAH	BETA	CY	CLN	CSL
10.393	-.093	.59910	-1.05190	11.61180	-4.92370	7.50000	9.67230	-4.98240	.06910	-.01560	.01448
10.413	2.882	.60020	-1.45190	11.60080	-4.91330	7.50000	9.67070	-4.97430	.07170	-.01600	.01460
10.438	7.530	.59990	-2.08240	11.60720	-4.90870	7.50000	9.66620	-4.97440	.07420	-.01600	.01470
10.483	15.189	.60080	-3.13490	11.63100	-4.91100	7.50000	9.66350	-4.97360	.07870	-.01670	.01490
10.527	29.943	.59960	-5.16010	11.67380	-4.92360	7.50000	9.65390	-4.97220	.08480	-.01840	.01500
10.564	45.352	.60010	-7.29310	11.70260	-4.92950	7.50000	9.65000	-4.97110	.08770	-.01950	.01510
10.566	47.556	.59980	-7.60080	11.70560	-4.93000	7.50000	9.65160	-4.98630	.08890	-.01990	.01510
	GRADIENT	-.00006	-.13565	.00138	.00099	.00000	-.00097	-.00002	.00054	.00000	.00002

RUN NO. 810/ 0 RN/L = 3.26 GRADIENT INTERVAL = .00/ 12.00

ALPHAO	DZ	MACH	DX	DY	BETAO	PHI	ALPHAH	BETA	CY	CLN	CSL
14.680	.829	.60040	-2.17220	11.58110	-4.34470	7.50000	9.70740	-4.97590	.05540	-.01460	.01860
14.684	3.926	.59960	-2.59130	11.58530	-4.33890	7.50000	9.69930	-4.98360	.05950	-.01470	.01850
14.700	7.951	.60050	-3.13840	11.58450	-4.33550	7.50000	9.69450	-4.98390	.06230	-.01430	.01780
14.711	15.864	.59950	-4.22030	11.60190	-4.33950	7.50000	9.68490	-4.97770	.06480	-.01260	.01630
14.732	30.777	.59960	-6.27550	11.65440	-4.35420	7.50000	9.67290	-4.97590	.07580	-.01460	.01560
14.745	45.232	.60020	-8.26290	11.67750	-4.36110	7.50000	9.66090	-4.98040	.08350	-.01800	.01550
14.748	60.426	.59990	-10.26960	11.69300	-4.37020	7.50000	9.59040	-4.96340	.08770	-.01960	.01550
	GRADIENT	.00002	-.13567	.00044	.00127	.00000	-.00178	-.00107	.00096	.00004	-.00012

CA20 747/1 01 S1 CARRIER DATA (AGN098) (01 DEC 75)

REFERENCE DATA

SREF =	5500.0000 SQ.FT.	XMRP =	1339.9000 IN.XC
LREF =	327.7800 IN.	YMRP =	.0000 IN.YC
BREF =	2348.0400 IN.	ZMRP =	190.8000 IN.ZC
SCALE =	.0300		

PARAMETRIC DATA

ALPHAC =	4.000	BETAC =	.000
ELV-IB =	.000	ELV-OB =	3.000
ELEVON =	5.000	MACH =	.600
BETAO =	-5.000	PHI =	7.500
DX =	.000	DY =	10.000

RUN NO. 803/ 0 RN/L = 3.29 GRADIENT INTERVAL = .00/ 12.00

ALPHAO	DZ	MACH	DX	DY	BETAO	PHI	ALPHAW	BETA	CY	CLN	CSL
10.589	.754	.59940	.66640	10.56860	-4.90970	7.50000	5.84440	-.00200	-.03000	.00310	.00290
10.591	3.682	.59980	.46860	10.56500	-4.90860	7.50000	5.84070	.00000	-.02320	.00100	.00260
10.585	7.812	.60050	.18690	10.57170	-4.91050	7.50000	5.83450	.00630	-.02140	.00240	.00180
10.587	15.159	.60020	-.31050	10.56790	-4.91080	7.50000	5.82350	.00350	-.02230	.00560	.00040
10.593	28.483	.60030	-1.22300	10.59810	-4.92080	7.50000	5.81450	-.00390	-.01660	.00510	-.00030
10.609	45.607	.60050	-2.39880	10.61570	-4.92840	7.50000	5.80530	.00650	-.00940	.00220	-.00010
10.609	47.846	.60020	-2.55520	10.61480	-4.92650	7.50000	5.80650	.00660	-.00910	.00210	-.00020
	GRADIENT	.00017	-.05798	.00052	-.00014	.00000	-.00141	.00120	.00117	-.00007	-.00016

RUN NO. 806/ 0 RN/L = 3.28 GRADIENT INTERVAL = .00/ 12.00

ALPHAO	DZ	MACH	DX	DY	BETAO	PHI	ALPHAW	BETA	CY	CLN	CSL
14.807	2.070	.60080	-.38660	10.63100	-4.34420	7.50000	5.88990	.00980	-.04930	.00690	.00470
14.795	5.158	.60030	-.60460	10.62780	-4.34220	7.50000	5.88820	.01080	-.04190	.00580	.00470
14.785	9.244	.59960	-.88860	10.62780	-4.34200	7.50000	5.88130	.00310	-.03630	.00570	.00380
14.782	17.214	.60030	-1.43520	10.62940	-4.34560	7.50000	5.86420	.01620	-.03410	.00840	.00200
14.782	31.681	.59940	-2.42890	10.65410	-4.35590	7.50000	5.84360	.01300	-.03210	.01190	-.00070
14.778	47.097	.60050	-3.49310	10.66870	-4.36210	7.50000	5.83380	.01160	-.01650	.00500	-.00010
14.777	61.842	.60050	-4.52010	10.68370	-4.37040	7.50000	5.83040	.02120	-.01180	.00300	-.00020
	GRADIENT	-.00017	-.06996	-.00042	.00029	.00000	-.00122	-.00098	.00179	-.00016	-.00013

CA20 747/1 01 S1 CARRIER DATA (AGN099) (01 DEC 75)

REFERENCE DATA

SREF =	5500.0000 SQ.FT.	XMRP =	1339.9000 IN.XC
LREF =	327.7800 IN.	YMRP =	.0000 IN.YC
BREF =	2348.0400 IN.	ZMRP =	190.8000 IN.ZC
SCALE =	.0300		

PARAMETRIC DATA

ALPHAC =	8.000	BETAC =	.000
ELV-IB =	.000	ELV-OB =	3.000
ELEVON =	5.000	MACH =	.600
BETAO =	-5.000	PHI =	7.500
DX =	.000	DY =	10.000

RUN NO. 812/ 0 RN/L = 3.28 GRADIENT INTERVAL = .00/ 12.00

ALPHAO	DZ	MACH	DX	DY	BETAO	PHI	ALPHAH	BETA	CY	CLN	CSL
10.406	-.598	.60000	-.96780	10.55670	-4.93340	7.50000	9.67260	-.00310	-.02430	-.00140	.00018
10.423	3.005	.60030	-1.45270	10.54650	-4.92570	7.50000	9.66800	-.00610	-.02470	.00170	-.00020
10.446	7.573	.60010	-2.07700	10.53970	-4.91900	7.50000	9.66960	-.00850	-.02470	.00420	-.00060
10.488	15.463	.60050	-3.15600	10.53870	-4.91500	7.50000	9.66200	-.00260	-.02280	.00620	-.00110
10.541	30.172	.59930	-5.18260	10.56410	-4.91980	7.50000	9.65470	.00010	-.01320	.00330	-.00090
10.563	44.995	.59930	-7.22310	10.59760	-4.92660	7.50000	9.64680	.00120	-.00990	.00220	-.00100
10.567	47.483	.60010	-7.43590	10.58970	-4.92750	7.50000	9.54790	.00120	-.00910	.00200	-.00100
	GRADIENT	-.00004	-.13666	-.00149	.00147	.00000	.00035	-.00053	.00000	.00055	-.00009

RUN NO. 809/ 0 RN/L = 3.27 GRADIENT INTERVAL = .00/ 12.00

ALPHAO	DZ	MACH	DX	DY	BETAO	PHI	ALPHAH	BETA	CY	CLN	CSL
14.690	.880	.60010	-2.20570	10.62000	-4.36030	7.50000	9.78690	.00160	-.03970	.00140	.00290
14.694	3.883	.59920	-2.61840	10.61290	-4.35390	7.50000	9.78560	-.00800	-.03740	.00330	.00230
14.701	8.089	.59980	-3.19440	10.60340	-4.34950	7.50000	9.77680	.00430	-.03720	.00680	.00180
14.719	15.576	.60050	-4.22500	10.60120	-4.34600	7.50000	9.76790	-.00550	-.03400	.00910	.00060
14.734	30.598	.59970	-6.31890	10.63630	-4.35490	7.50000	9.75500	-.00450	-.02410	.00810	-.00030
14.751	45.433	.60000	-8.38220	10.65290	-4.36030	7.50000	9.74330	-.00010	-.01310	.00340	-.00030
14.752	60.072	.59980	-10.42840	10.66490	-4.36690	7.50000	9.73740	.00100	-.00980	.00230	-.00050
	GRADIENT	-.00003	-.13714	-.00230	.00147	.00000	-.00145	.00054	.00033	.00075	-.00015

ORIGINAL PAGE IS
OF POOR QUALITY

CA20 747/1 01 SI CARRIER DATA (AGN100) (01 DEC 75)

REFERENCE DATA

SREF =	5500.0000 SQ.FT.	XMRP =	1339.8000 IN.XC		
LREF =	327.7800 IN.	YMRP =	.0000 IN.YC		
BREF =	2348.0400 IN.	ZMRP =	190.8000 IN.ZC		
SCALE =	.0300				

PARAMETRIC DATA

ALPHAC =	4.000	BETAC =	5.000
ELV-IB =	.000	ELV-OB =	3.000
ELEVON =	5.000	MACH =	.600
BETAO =	-5.000	PHI =	7.500
DX =	.000	DY =	10.000

RUN NO. 802/ 0 RN/L = 3.31 GRADIENT INTERVAL = .00/ 12.00

ALPHAO	DZ	MACH	DX	DY	BETAO	PHI	ALPHAH	BETA	CY	CLN	CSL
10.632	.542	.60000	.66220	9.42040	-4.89370	7.50000	5.84060	4.96470	-.14040	.02990	-.01380
10.612	3.385	.60040	.47030	9.42520	-4.89960	7.50000	5.83720	4.97190	-.13680	.03040	-.01440
10.597	7.664	.60000	.18040	9.43110	-4.90530	7.50000	5.83210	4.98920	-.12830	.02850	-.01470
10.597	15.623	.60080	-.35820	9.44230	-4.91010	7.50000	5.82130	4.96770	-.11940	.02670	-.01490
10.604	30.599	.59980	-1.38180	9.45100	-4.91870	7.50000	5.81040	4.98430	-.11210	.02550	-.01480
10.607	45.321	.60010	-2.38970	9.46750	-4.92620	7.50000	5.80330	4.97660	-.11010	.02540	-.01470
10.608	47.816	.59960	-2.55310	9.47050	-4.92700	7.50000	5.80230	4.98460	-.10880	.02510	-.01470
	GRADIENT	-.00001	-.06765	.00149	-.00160	.00000	-.00119	.00349	.00172	-.00022	-.00012

RUN NO. 807/ 0 RN/L = 3.28 GRADIENT INTERVAL = .00/ 12.00

ALPHAO	DZ	MACH	DX	DY	BETAO	PHI	ALPHAH	BETA	CY	CLN	CSL
14.862	2.028	.59920	-.39040	9.55980	-4.33510	7.50000	5.85930	4.97110	-.15300	.03120	-.01190
14.831	4.948	.60030	-.58980	9.55940	-4.33560	7.50000	5.85320	4.97710	-.14960	.03300	-.01260
14.807	9.169	.60040	-.87690	9.56420	-4.33950	7.50000	5.84700	4.98400	-.14440	.03380	-.01380
14.793	16.781	.59910	-1.40070	9.55640	-4.34260	7.50000	5.83710	4.98590	-.13370	.03200	-.01460
14.783	31.685	.59990	-2.41640	9.57980	-4.35320	7.50000	5.81770	4.99680	-.12050	.02850	-.01470
14.782	46.800	.60030	-3.45430	9.59590	-4.35850	7.50000	5.80880	4.98200	-.11620	.02780	-.01480
14.777	61.889	.60060	-4.49120	9.60740	-4.36720	7.50000	5.80130	4.99120	-.11190	.02620	-.01490
	GRADIENT	.00016	-.06814	.00065	-.00064	.00000	-.00170	.00179	.00121	.00035	-.00027

CA20 747/1 01 SI CARRIER DATA (AGN101) (01 DEC 75)

REFERENCE DATA

SREF = 5500.0000 SQ.FT. XMRP = 1339.9000 IN.XC
LREF = 327.7800 IN. YMRP = .0000 IN.YC
BREF = 2348.0400 IN. ZMRP = 190.8000 IN.ZC
SCALE = .0300

PARAMETRIC DATA

ALPHAC = 8.000 BETAC = 5.000
ELV-IB = .000 ELV-OB = 3.000
ELEVON = 5.000 MACH = .600
BETAO = -5.000 PHI = 7.500
DX = .000 DY = 10.000

RUN NO. 813/ 0 RN/L = 3.25 GRADIENT INTERVAL = .00/ 12.00

ALPHAO	DZ	MACH	DX	DY	BETAO	PHI	ALPHAH	BETA	CY	CLN	CSL
10.452	-.442	.59950	-1.00350	9.33640	-4.90170	7.50000	9.67500	5.00340	-.13310	.02440	-.01100
10.446	3.090	.59940	-1.48320	9.34360	-4.90830	7.50000	9.67640	4.99520	-.12670	.02480	-.01120
10.457	7.446	.59950	-2.07650	9.33990	-4.90990	7.50000	9.67680	5.00300	-.12140	.02460	-.01150
10.492	15.406	.60030	-3.16620	9.35320	-4.91170	7.50000	9.67040	4.98840	-.11400	.02360	-.01150
10.544	30.322	.59990	-5.21950	9.36460	-4.91650	7.50000	9.66170	5.00330	-.10990	.02420	-.01150
10.565	44.966	.60030	-7.24190	9.38730	-4.92340	7.50000	9.65800	4.99650	-.10670	.02330	-.01140
10.568	47.470	.59940	-7.59050	9.39030	-4.92370	7.50000	9.65730	4.99660	-.10620	.02320	-.01130
	GRADIENT	.00002	-.13620	-.00085	-.00037	.00000	.00009	.00179	.00122	-.00005	-.00007

RUN NO. 808/ 0 RN/L = 3.28 GRADIENT INTERVAL = .00/ 12.00

ALPHAO	DZ	MACH	DX	DY	BETAO	PHI	ALPHAH	BETA	CY	CLN	CSL
14.737	1.500	.59960	-2.26980	9.52040	-4.34530	7.50000	9.70640	4.96760	-.14950	.02900	-.01180
14.727	4.732	.59970	-2.70730	9.51530	-4.34640	7.50000	9.70310	4.97450	-.14330	.02990	-.01260
14.725	9.125	.60070	-3.30300	9.50660	-4.34710	7.50000	9.69750	4.99770	-.13610	.02980	-.01320
14.735	16.820	.59920	-4.35290	9.50260	-4.34540	7.50000	9.68820	4.98480	-.12410	.02710	-.01350
14.755	31.671	.60060	-6.39490	9.52470	-4.35200	7.50000	9.67960	4.98700	-.11380	.02480	-.01200
14.761	46.564	.60030	-8.45280	9.53750	-4.35700	7.50000	9.67160	4.98740	-.11020	.02450	-.01140
14.756	61.712	.60010	-10.55320	9.56010	-4.36580	7.50000	9.66500	4.98810	-.10820	.02400	-.01120
	GRADIENT	.00015	-.13552	-.00182	-.00023	.00000	-.00142	.00403	.00175	.00010	-.00018

CA20 747/1 01 S1 CARRIER DATA (AGN102) (01 DEC 75)

REFERENCE DATA

SREF =	5500.0000 SQ.FT.	XMRP =	1339.9000	IN.XC	
LREF =	327.7800 IN.	YMRP =	.0000	IN.YC	
BREF =	2348.0400 IN.	ZMRP =	190.8000	IN.ZC	
SCALE =	.0300				

PARAMETRIC DATA

ALPHAC =	4.000	BETAC =	-5.000
ELV-IB =	.000	ELV-OB =	3.000
ELEVON =	5.000	MACH =	.600
BETAO =	-5.000	PHI =	7.500
DX =	.000	DY =	10.000

RUN NO. 815/ 0 RN/L = 3.26 GRADIENT INTERVAL = .00/ 12.00

ALPHAO	DZ	MACH	DX	DY	BETAO	PHI	ALPHAH	BETA	CY	CLN	CSL
14.790	1.983	.60070	-.39550	11.56920	-4.33750	7.50000	5.87520	-4.98760	.05440	-.01240	.02018
14.773	4.801	.60000	-.59210	11.57770	-4.33630	7.50000	5.87430	-4.98050	.05590	-.01170	.02048
14.771	9.259	.59970	-.89880	11.57700	-4.33780	7.50000	5.86980	-4.96350	.06190	-.01340	.01950
14.770	16.962	.60030	-1.42840	11.59840	-4.34500	7.50000	5.86010	-4.97990	.06450	-.01220	.01790
14.773	31.562	.60000	-2.43150	11.62830	-4.35920	7.50000	5.84300	-4.97290	.07040	-.01150	.01490
14.769	46.760	.60020	-3.47550	11.64520	-4.36560	7.50000	5.82880	-4.97390	.08530	-.01890	.01530
14.768	61.866	.60010	-4.51840	11.66000	-4.37310	7.50000	5.82040	-4.97220	.09020	-.02070	.01480
	GRADIENT	-.00013	-.06913	.00096	-.00007	-.00000	-.00077	.00336	.00106	-.00015	-.00009

CA20 747/1 01 S1 CARRIER DATA (AGN103) (01 DEC 75)

REFERENCE DATA

SREF =	5500.0000 SQ.FT.	XMRP =	1339.9000	IN.XC	
LREF =	327.7800 IN.	YMRP =	.0000	IN.YC	
BREF =	2348.0400 IN.	ZMRP =	190.8000	IN.ZC	
SCALE =	.0300				

PARAMETRIC DATA

ALPHAC =	4.000	BETAC =	.000
ELV-IB =	.000	ELV-OB =	3.000
ELEVON =	5.000	MACH =	.600
BETAO =	-5.000	PHI =	7.500
DX =	.000	DY =	10.000

RUN NO. 814/ 0 RN/L = 3.24 GRADIENT INTERVAL = .00/ 12.00

ALPHAO	DZ	MACH	DX	DY	BETAO	PHI	ALPHAH	BETA	CY	CLN	CSL
14.793	2.161	.60000	-.39170	10.63030	-4.34420	7.50000	5.88550	-.01290	-.04680	.00640	.00536
14.782	5.231	.59970	-.60470	10.62790	-4.34280	7.50000	5.87880	-.01210	-.04000	.00540	.00518
14.771	9.123	.59920	-.87590	10.62870	-4.34290	7.50000	5.87490	-.02000	-.03540	.00560	.00426
14.766	16.756	.59950	-1.40020	10.62590	-4.34500	7.50000	5.86050	-.01430	-.03240	.00790	.00240
14.769	31.625	.60020	-2.41880	10.65530	-4.35690	7.50000	5.83930	-.02550	-.03060	.01180	-.00050
14.767	46.769	.60020	-3.46380	10.66050	-4.36120	7.50000	5.82370	-.01910	-.01520	.00480	.00018
14.766	61.571	.59960	-4.49070	10.67110	-4.36830	7.50000	5.82390	-.00940	-.01020	.00270	.00020
	GRADIENT	-.00012	-.06955	-.00021	.00018	.00000	-.00150	-.00106	.00162	-.00011	-.00015

ORIGINAL PAGE IS
OF POOR QUALITY

CA20 747/1 01 S1 CARRIER DATA (AGN104) (01 DEC 75)

REFERENCE DATA

SREF = 5500.0000 SQ.FT. XMRP = 1339.9000 IN.XC
LREF = 327.7800 IN. YMRP = .0000 IN.YC
BREF = 2348.0400 IN. ZMRP = 190.8000 IN.ZC
SCALE = .0300

PARAMETRIC DATA

ALPHAC = 4.000 BETAC = -5.000
ELV-IB = .000 ELV-OB = 3.000
ELEVON = 5.000 MACH = .600
BETAO = -5.000 PHI = .000
DX = 10.000 DY = .000

RUN NO. 830/ 0 RN/L = 3.29 GRADIENT INTERVAL = .00/ 12.00

ALPHAO	DZ	MACH	DX	DY	BETAO	PHI	ALPHAW	BETA	CY	CLN	CSL
10.325	-1.343	.60050	10.81020	2.27280	-5.21650	.00000	5.82520	-4.95370	.10230	-.01750	.01130
10.312	1.825	.60080	10.60190	2.28000	-5.21910	.00000	5.82640	-4.94080	.10600	-.02310	.01290
10.306	6.300	.60070	10.30090	2.29610	-5.22500	.00000	5.82270	-4.94040	.10290	-.02330	.01330
10.313	13.860	.60000	9.78720	2.31560	-5.23200	.00000	5.81650	-4.94080	.10010	-.02290	.01340
10.331	28.680	.60030	8.77630	2.34420	-5.24080	.00000	5.80760	-4.95590	.09860	-.02320	.01380
10.341	43.881	.60040	7.73970	2.34160	-5.24020	.00000	5.79900	-4.93970	.09890	-.02390	.01420
	GRADIENT	-.00002	-.06726	.00360	-.00132	.00000	-.00083	.00009	-.00069	-.00004	.00009

RUN NO. 835/ 0 RN/L = 3.27 GRADIENT INTERVAL = .00/ 12.00

ALPHAO	DZ	MACH	DX	DY	BETAO	PHI	ALPHAW	BETA	CY	CLN	CSL
14.692	1.273	.60040	9.46210	2.19680	-5.18550	.00000	5.85310	-4.95420	.09710	-.01730	.01180
14.668	4.371	.60000	9.25780	2.20440	-5.19130	.00000	5.84860	-4.94840	.10450	-.02370	.01310
14.657	8.918	.60010	8.95000	2.21850	-5.19620	.00000	5.84580	-4.94910	.09990	-.02260	.01380
14.654	16.303	.59960	8.44290	2.24340	-5.20370	.00000	5.83620	-4.94140	.09720	-.02240	.01400
14.657	31.560	.59910	7.39910	2.26540	-5.21060	.00000	5.82260	-4.94510	.08860	-.01820	.01310
14.663	46.389	.59940	6.38570	2.27270	-5.21250	.00000	5.81290	-4.94850	.09640	-.02290	.01410
14.672	61.453	.59910	5.36270	2.25720	-5.21370	.00000	5.80460	-4.94790	.09710	-.02360	.01420
	GRADIENT	-.00003	-.06704	.00286	-.00138	.00000	-.00093	.00061	.00026	-.00062	.00025

CA20 747/1 01 51 CARRIER DATA (AGN105) (01 DEC 75)

REFERENCE DATA

SREF =	5500.0000 SQ.FT.	XMRP =	1339.9000 IN.XC		
LREF =	327.7800 IN.	YMRP =	.0000 IN.YC		
BREF =	2348.0400 IN.	ZMRP =	190.8000 IN.ZC		
SCALE =	.0300				

PARAMETRIC DATA

ALPHAC =	8.000	BETAC =	-5.000
ELV-IB =	.000	ELV-OB =	3.000
ELEVON =	5.000	MACH =	.600
BETAO =	-5.000	PHI =	.000
DX =	10.000	DY =	.000

RUN NO. 841/ 0 RN/L = 3.26 GRADIENT INTERVAL = .00/ 12.00

ALPHAO	DZ	MACH	DX	DY	BETAO	PHI	ALPHAH	BETA	CY	CLN	CSL
10.296	-3.049	.60000	9.37130	2.28520	-5.19050	.00000	9.65170	-5.00970	.09850	-.01310	.01040
10.307	-.020	.60070	8.97290	2.29580	-5.19890	.00000	9.65150	-5.00360	.10040	-.01960	.01200
10.328	4.578	.59940	8.34450	2.32580	-5.21110	.00000	9.65270	-5.00320	.09670	-.02010	.01260
10.359	12.050	.59930	7.32250	2.35920	-5.22350	.00000	9.65220	-5.01160	.09250	-.01920	.01280
10.437	27.168	.59920	5.23740	2.39020	-5.23710	.00000	9.64590	-5.00940	.09450	-.02150	.01390
10.469	41.982	.60070	3.20170	2.39690	-5.24060	.00000	9.63880	-4.99400	.09330	-.02130	.01440
	GRADIENT	.00000	.00000	.00000	.00000	.00000	.00000	.00000	.00000	.00000	.00000

RUN NO. 836/ 0 RN/L = 3.31 GRADIENT INTERVAL = 00/ 12.00

ALPHAO	DZ	MACH	DX	DY	BETAO	PHI	ALPHAH	BETA	CY	CLN	CSL
14.545	-.709	.60080	7.91490	2.17100	-5.16670	.00000	9.68170	-4.94920	.10600	-.02060	.01140
14.535	2.486	.60040	7.49070	2.19280	-5.17480	.00000	9.68270	-4.94640	.10550	-.02360	.01230
14.550	7.114	.60040	6.86490	2.22060	-5.18440	.00000	9.67370	-4.94690	.10070	-.02290	.01280
14.571	14.418	.60010	5.87150	2.24480	-5.19520	.00000	9.66760	-4.94090	.09480	-.02080	.01310
14.610	29.342	.59920	3.82840	2.27660	-5.20660	.00000	9.66010	-4.94920	.09160	-.02010	.01380
14.638	44.463	.60030	1.75100	2.28750	-5.21020	.00000	9.65230	-4.94820	.09200	-.02090	.01430
14.650	59.174	.60010	-.27960	2.28250	-5.21320	.00000	9.64650	-4.94020	.09180	-.02110	.01460
	GRADIENT	.00000	-.13522	.00601	-.00207	.00000	-.00194	-.00011	-.00104	.00015	.00011

CA20 747/1 01 S1 CARRIER DATA (AGN106) (01 DEC 75)

REFERENCE DATA

SREF = 5500.0000 SQ.FT. XMRP = 1339.9000 IN.XC
LREF = 327.7800 IN. YMRP = .0000 IN.YC
BREF = 2348.0400 IN. ZMRP = 190.8000 IN.ZC
SCALE = .0300

PARAMETRIC DATA

ALPHAC = 4.000 BETAC = -5.000
ELV-IB = .000 ELV-OB = 3.000
ELEVON = 5.000 MACH = .600
BETAO = -5.000 PHI = .000
DX = .000 DY = 10.000

RUN NO. 844/ 0 RN/L = 3.30 GRADIENT INTERVAL = .00/ 12.00

ALPHAO	DZ	MACH	DX	DY	BETAO	PHI	ALPHAH	BETA	CY	CLN	CSL
10.440	-.766	.59920	.77820	11.46600	-5.24580	.00000	5.84320	-4.97280	.08260	-.02090	.01958
10.421	2.266	.59970	.58010	11.45390	-5.23960	.00000	5.84170	-4.96410	.08360	-.02180	.01940
10.417	6.604	.59950	.28450	11.45320	-5.23900	.00000	5.83810	-4.95640	.08460	-.02180	.01870
10.423	14.060	.59930	-.22360	11.46500	-5.24390	.00000	5.82880	-4.96580	.08330	-.02000	.01730
10.442	29.201	.60090	-1.26380	11.49370	-5.25780	.00000	5.82110	-4.98170	.08550	-.01940	.01600
10.451	44.256	.59990	-2.29630	11.50700	-5.26440	.00000	5.81170	-4.98130	.08840	-.02000	.01530
	GRADIENT	-.00005	-.06815	-.00016	.00014	.00000	-.00083	.00178	.00023	-.00000	-.00016

CA20 747/1 01 S1 CARRIER DATA (AGN107) (01 DEC 75)

REFERENCE DATA

SREF = 5500.0000 SQ.FT. XMRP = 1339.9000 IN.XC
LREF = 327.7800 IN. YMRP = .0000 IN.YC
BREF = 2348.0400 IN. ZMRP = 190.8000 IN.ZC
SCALE = .0300

PARAMETRIC DATA

ALPHAC = 4.000 BETAC = -5.000
ELV-IB = .000 ELV-OB = 3.000
ELEVON = 5.000 MACH = .600
BETAO = -5.000 PHI = .000
DX = 10.000 DY = 10.000

RUN NO. 819/ 0 RN/L = 3.26 GRADIENT INTERVAL = .00/ 12.00

ALPHAO	DZ	MACH	DX	DY	BETAO	PHI	ALPHAH	BETA	CY	CLN	CSL
10.347	-1.294	.60000	10.79930	12.27000	-5.22040	.00000	5.82480	-4.94250	.08310	-.01950	.01778
10.332	1.624	.59960	10.60860	12.25380	-5.21300	.00000	5.82770	-4.94090	.08530	-.02130	.01790
10.329	6.160	.59980	10.30320	12.25660	-5.21390	.00000	5.82490	-4.94060	.08600	-.02150	.01760
10.340	13.665	.59960	9.79210	12.26900	-5.21790	.00000	5.81970	-4.94960	.08480	-.02010	.01660
10.361	28.609	.60000	8.77050	12.29260	-5.22970	.00000	5.81120	-4.95700	.08750	-.02050	.01590
10.373	43.844	.59970	7.72830	12.30200	-5.23610	.00000	5.80290	-4.94920	.08900	-.02060	.01510
	GRADIENT	.00004	-.06732	.00062	-.00020	.00000	-.00062	.00007	.00015	-.00004	-.00007

CA20 747/1 01 SI CARRIER DATA (AGN107) (01 DEC 75)

REFERENCE DATA

SREF = 5500.0000 SQ.FT. XMRP = 1339.9000 IN.XC
LREF = 327.7800 IN. YMRP = .0000 IN.YC
BREF = 2348.0400 IN. ZMRP = 190.8000 IN.ZC
SCALE = .0300

PARAMETRIC DATA

ALPHAC = 4.000 BETAC = -5.000
ELV-IB = .000 ELV-OB = 3.000
ELEVON = 5.000 MACH = .600
BETAO = -5.000 PHI = .000
DX = 10.000 DY = 10.000

RUN NO. 820/ 0 RN/L = 3.25 GRADIENT INTERVAL = .00/ 12.00

ALPHAO	DZ	MACH	DX	DY	BETAO	PHI	ALPHAW	BETA	CY	CLN	CSL
14.674	2.198	.59990	9.40160	12.14780	-5.18880	.00000	5.84730	-4.94690	.08120	-.02350	.02238
14.656	5.136	.59950	9.20660	12.15380	-5.18230	.00000	5.84880	-4.94700	.08120	-.02330	.02190
14.650	9.779	.59920	8.89000	12.15850	-5.18330	.00000	5.84540	-4.94090	.07940	-.02140	.02100
14.655	17.264	.60090	8.38210	12.17450	-5.18990	.00000	5.83750	-4.94980	.07840	-.01990	.01910
14.666	32.135	.60020	7.36720	12.19480	-5.20170	.00000	5.82280	-4.94830	.07160	-.01300	.01618
14.669	47.232	.59990	6.32960	12.21060	-5.20820	.00000	5.81630	-4.95250	.08140	-.01700	.01530
14.671	62.086	.60090	5.31860	12.22610	-5.21690	.00000	5.80290	-4.94930	.08880	-.02040	.01520
	GRADIENT	-.00009	-.06755	.00138	.00064	.00000	-.00037	.00084	-.00025	.00029	-.00017

CA20 747/1 01 SI CARRIER DATA (AGN108) (01 DEC 75)

REFERENCE DATA

SREF = 5500.0000 SQ.FT. XMRP = 1339.9000 IN.XC
LREF = 327.7800 IN. YMRP = .0000 IN.YC
BREF = 2348.0400 IN. ZMRP = 190.8000 IN.ZC
SCALE = .0300

PARAMETRIC DATA

ALPHAC = 8.000 BETAC = -5.000
ELV-IB = .000 ELV-OB = 3.000
ELEVON = 5.000 MACH = .600
BETAO = -5.000 PHI = .000
DX = 10.000 DY = 10.000

RUN NO. 0/ 0 RN/L = 3.24 GRADIENT INTERVAL = .00/ 12.00

ALPHAO	DZ	MACH	DX	DY	BETAO	PHI	ALPHAW	BETA	CY	CLN	CSL
10.102	-2.746	.60020	9.41230	12.35040	-5.23470	.00000	9.67100	-4.96040	.07530	-.01560	.01354
10.121	.382	.60070	8.99580	12.32340	-5.21950	.00000	9.67210	-4.96600	.07800	-.01790	.01460
10.146	4.894	.60050	8.39130	12.31250	-5.21220	.00000	9.67360	-4.96550	.08000	-.01860	.01510
10.184	12.419	.59910	7.35250	12.30890	-5.21150	.00000	9.66850	-4.95820	.08140	-.01820	.01520
10.257	27.611	.59910	5.25330	12.33560	-5.22430	.00000	9.66320	-4.97280	.08510	-.01910	.01530
10.295	42.408	.60060	3.20660	12.34980	-5.23390	.00000	9.66060	-4.96480	.08690	-.01930	.01530
	GRADIENT	-.00004	-.13620	-.00242	.00162	.00000	.00033	.00011	.00044	-.00016	.00011

ORIGINAL PAGE IS
OF POOR QUALITY

CA20 747/1 01 S1 CARRIER DATA (AGN108) (01 DEC 75)

REFERENCE DATA

SREF = 5500.0000 SQ.FT. XMRP = 1339.9000 IN.XC
LREF = 327.7800 IN. YMRP = .0000 IN.YC
BREF = 2348.0400 IN. ZMRP = 190.8000 IN.ZC
SCALE = .0300

PARAMETRIC DATA

ALPHAC =	8.000	BETAC =	-5.000
ELV-IB =	.000	ELV-OB =	3.000
ELEVON =	5.000	MACH =	.600
BETAO =	-5.000	PHI =	.000
DX =	10.000	DY =	10.000

RUN NO. 0/ 0 RN/L = 3.24 GRADIENT INTERVAL = .00/ 12.00

ALPHAO	DZ	MACH	DX	DY	BETAO	PHI	ALPHAW	BETA	CY	CLN	CSL
14.529	-.426	.59900	7.87850	12.21900	-5.19280	.00000	9.70100	-4.94840	.07300	-.02080	.01870
14.532	2.587	.60000	7.47560	12.21350	-5.18440	.00000	9.69960	-4.94680	.07400	-.02030	.01840
14.546	7.236	.59950	6.84400	12.20290	-5.18130	.00000	9.69590	-4.94130	.07590	-.02000	.01800
14.574	14.804	.59940	5.81040	12.20650	-5.18370	.00000	9.68990	-4.94590	.07060	-.01490	.01690
14.612	29.618	.60010	3.77810	12.23240	-5.19730	.00000	9.68030	-4.95430	.07360	-.01410	.01590
14.638	44.620	.59980	1.70940	12.24440	-5.20570	.00000	9.67240	-4.94390	.08110	-.01690	.01570
14.647	59.279	.60050	-.31800	12.25690	-5.21300	.00000	9.66660	-4.94210	.08540	-.01880	.01530
	GRADIENT	-.00011	-.13586	-.00228	.00067	.00000	-.00080	.00161	.00041	.00006	-.00009

CA20 747/1 01 S1 CARRIER DATA (AGN109) (01 DEC 75)

REFERENCE DATA

SREF = 5500.0000 SQ.FT. XMRP = 1339.9000 IN.XC
LREF = 327.7800 IN. YMRP = .0000 IN.YC
BREF = 2348.0400 IN. ZMRP = 190.8000 IN.ZC
SCALE = .0300

PARAMETRIC DATA

ALPHAC =	4.000	BETAC =	.000
ELV-IB =	.000	ELV-OB =	3.000
ELEVON =	5.000	MACH =	.600
BETAO =	-5.000	PHI =	.000
DX =	10.000	DY =	.000

RUN NO. 831/ 0 RN/L = 3.27 GRADIENT INTERVAL = .00/ 12.00

ALPHAO	DZ	MACH	DX	DY	BETAO	PHI	ALPHAW	BETA	CY	CLN	CSL
10.322	-1.388	.59950	10.83060	.35760	-5.24010	.00000	5.82770	.01750	-.01680	.00650	-.00490
10.306	1.603	.59980	10.63220	.35120	-5.23660	.00000	5.82730	.01740	-.01520	.00670	-.00440
10.302	6.139	.59980	10.32610	.35200	-5.23390	.00000	5.82580	.01920	-.01080	.00470	-.00370
10.313	13.778	.60010	9.80690	.35410	-5.23360	.00000	5.81650	.02270	-.00450	.00100	-.00270
10.332	28.819	.60010	8.78170	.36250	-5.23820	.00000	5.80830	.02410	-.00230	-.00050	-.00170
10.343	43.741	.59970	7.76010	.36160	-5.23650	.00000	5.80220	.02420	-.00280	-.00060	-.00100
	GRADIENT	.00018	-.06747	.00018	.00060	.00000	-.00037	.00040	.00097	-.00044	.00015

CA20 747/1 01 S1 CARRIER DATA (AGN109) (01 DEC 75)

REFERENCE DATA

SREF =	5500.0000 SQ.FT.	XMRP =	1339.9000 IN.XC		
LREF =	327.7800 IN.	YMRP =	.0000 IN.YC		
BREF =	2348.0400 IN.	ZMRP =	190.8000 IN.ZC		
SCALE =	.0300				

PARAMETRIC DATA

ALPHAC =	4.000	BETAC =	.000
ELV-IB =	.000	ELV-OB =	3.000
ELEVON =	5.000	MACH =	.600
BETAO =	-5.000	PHI =	.000
DX =	10.000	DY =	.000

RUN NO. 834/ 0 RN/L = 3.28 GRADIENT INTERVAL = .00/ 12.00

ALPHAO	DZ	MACH	DX	DY	BETAO	PHI	ALPHAW	BETA	CY	CLN	CSL
14.694	.928	.60020	9.50130	.34230	-5.20480	.00000	5.85520	.04520	-.02050	.00950	-.00610
14.676	3.997	.60080	9.29690	.34420	-5.20390	.00000	5.85320	.04700	-.01570	.00750	-.00520
14.658	8.486	.60030	8.99580	.35120	-5.20340	.00000	5.84780	.04140	-.01130	.00540	-.00430
14.660	16.091	.60010	8.47870	.35490	-5.20500	.00000	5.83780	.05340	-.00410	.00100	-.00290
14.656	31.106	.59990	7.44890	.37940	-5.20980	.00000	5.82070	.05560	-.00100	-.00130	-.00160
14.662	46.023	.60010	6.42710	.37940	-5.20940	.00000	5.81320	.05490	-.00320	-.00050	-.00110
14.673	60.943	.59930	5.41320	.35910	-5.21050	.00000	5.80510	.06210	-.00490	.00010	-.00080
	GRADIENT	.00000	-.06689	.00121	.00018	.00000	-.00111	-.00056	.00120	-.00054	.00024

CA20 747/1 01 S1 CARRIER DATA (AGN110) (01 DEC 75)

REFERENCE DATA

SREF =	5500.0000 SQ.FT.	XMRP =	1339.9000 IN.XC		
LREF =	327.7800 IN.	YMRP =	.0000 IN.YC		
BREF =	2348.0400 IN.	ZMRP =	190.8000 IN.ZC		
SCALE =	.0300				

PARAMETRIC DATA

ALPHAC =	8.000	BETAC =	.000
ELV-IB =	.000	ELV-OB =	3.000
ELEVON =	5.000	MACH =	.600
BETAO =	-5.000	PHI =	.000
DX =	10.000	DY =	.000

RUN NO. 840/ 0 RN/L = 3.28 GRADIENT INTERVAL = .00/ 12.00

ALPHAO	DZ	MACH	DX	DY	BETAO	PHI	ALPHAW	BETA	CY	CLN	CSL
10.304	-3.002	.60080	9.37460	.38610	-5.26550	.00000	9.65720	.05380	-.01430	.00320	-.00400
10.306	-.075	.59930	8.98600	.36130	-5.24900	.00000	9.65830	.05400	-.01130	.00300	-.00380
10.328	4.516	.59980	8.36210	.34360	-5.23870	.00000	9.65690	.06260	-.00810	.00200	-.00300
10.360	12.075	.59940	7.33520	.33740	-5.23350	.00000	9.64850	.06410	-.00430	.00040	-.00220
10.425	26.946	.60020	5.29150	.34810	-5.23860	.00000	9.64510	.06470	-.00350	-.00020	-.00160
10.467	42.070	.59950	3.20180	.35070	-5.23790	.00000	9.64320	.06490	-.00380	-.00030	-.00100
	GRADIENT	.00000	.00000	.00000	.00000	.00000	.00000	.00000	.00000	.00000	.00000

CA20 747/1 01 S1 CARRIER DATA (AGN110) (01 DEC 75)

REFERENCE DATA

SREF = 5500.0000 SQ.FT. XMRP = 1339.9000 IN.XC
LREF = 327.7800 IN. YMRP = .0000 IN.YC
BREF = 2348.0400 IN. ZMRP = 190.8000 IN.ZC
SCALE = .0300

PARAMETRIC DATA

ALPHAC =	8.000	BETAC =	.000
ELV-IB =	.000	ELV-OB =	3.000
ELEVON =	5.000	MACH =	.600
BETAO =	-5.000	PHI =	.000
DX =	10.000	DY =	.000

RUN NO. 837/ 0 RN/L = 3.29 GRADIENT INTERVAL = .00/ 12.00

ALPHAO	DZ	MACH	DX	DY	BETAO	PHI	ALPHAW	BETA	CY	CLN	CSL
14.301	-2.363	.59980	8.18810	.38570	-5.22010	.00000	9.68140	.00420	-.01770	.00630	-.00440
14.539	-1.012	.60010	7.96770	.38570	-5.21720	.00000	9.68610	.00410	-.01750	.00630	-.00440
14.492	1.816	.60010	7.59820	.37440	-5.21070	.00000	9.68190	.00420	-.01490	.00620	-.00410
14.537	2.114	.60080	7.55280	.37380	-5.21060	.00000	9.68180	.00420	-.01490	.00620	-.00400
14.547	6.572	.60090	6.95140	.36650	-5.20600	.00000	9.67480	.01540	-.00730	.00250	-.00340
14.576	14.073	.59990	5.93050	.36460	-5.20440	.00000	9.67030	.01810	-.00160	-.00040	-.00260
14.612	29.194	.60010	3.86470	.37730	-5.20900	.00000	9.66010	.01160	-.00080	-.00160	-.00190
14.641	44.237	.60050	1.79770	.37490	-5.20970	.00000	9.65280	.01810	-.00400	.00000	-.00140
14.651	58.932	.59980	-.22740	.37670	-5.21130	.00000	9.64550	.01740	-.00640	.00080	-.00110
	GRADIENT	.00010	-.13545	-.00165	.00101	.00000	-.00153	.00242	.00164	-.00080	.00014

CA20 747/1 01 S1 CARRIER DATA (AGN111) (01 DEC 75)

REFERENCE DATA

SREF = 5500.0000 SQ.FT. XMRP = 1339.9000 IN.XC
LREF = 327.7800 IN. YMRP = .0000 IN.YC
BREF = 2348.0400 IN. ZMRP = 190.8000 IN.ZC
SCALE = .0300

PARAMETRIC DATA

ALPHAC =	4.000	BETAC =	.000
ELV-IB =	.000	ELV-OB =	3.000
ELEVON =	5.000	MACH =	.600
BETAO =	-5.000	PHI =	.000
DX =	.000	DY =	10.000

RUN NO. 843/ 0 RN/L = 3.33 GRADIENT INTERVAL = .00/ 12.00

ALPHAO	DZ	MACH	DX	DY	BETAO	PHI	ALPHAW	BETA	CY	CLN	CSL
10.446	-.843	.60040	.80510	10.38400	-5.24130	.00000	5.84880	.06030	-.01740	-.00590	.00530
10.429	2.180	.59950	.59930	10.39070	-5.23930	.00000	5.84800	.05920	-.01700	-.00370	.00450
10.422	6.658	.59940	.29520	10.38630	-5.23920	.00000	5.84290	.06270	-.01080	-.00010	.00310
10.430	14.218	.59930	-.22540	10.38990	-5.24230	.00000	5.83930	.05110	-.02140	.00410	.00160
10.443	29.284	.60070	-1.25240	10.40340	-5.25400	.00000	5.82280	.05830	-.01750	.00470	.00040
10.450	44.292	.60010	-2.28200	10.41680	-5.26110	.00000	5.81300	.05180	-.01290	.00330	.00018
	GRADIENT	-.00002	-.06791	-.00098	.00002	.00000	-.00114	.00100	-.00040	.00080	-.00033

CA20 747/1 01 S1 CARRIER DATA (AOH112) (01 DEC 75)

REFERENCE DATA

SREF =	5500.0000 SQ.FT.	XMRP =	1339.9000 IN.XC
LREF =	327.7800 IN.	YMRP =	.0000 IN.YC
BREF =	2348.0400 IN.	ZMRP =	190.8000 IN.ZC
SCALE =	.0300		

PARAMETRIC DATA

ALPHAC =	4.000	BETAC =	.000
ELV-IB =	.000	ELV-OB =	3.000
ELEVON =	5.000	MACH =	.600
BETAO =	-5.000	PHI =	.000
DX =	10.000	DY =	10.000

RUN NO. 818/ 0 RN/L = 3.27 GRADIENT INTERVAL = .00/ 12.00

ALPHAO	DZ	MACH	DX	DY	BETAO	PHI	ALPHAW	BETA	CY	CLN	CSL
10.351	-1.302	.59940	10.82050	10.31730	-5.21620	.00000	5.83140	.07500	-.01450	-.00490	.00390
10.339	1.671	.60090	10.82210	10.32040	-5.21560	.00000	5.83320	.07410	-.01340	-.00400	.00320
10.338	6.235	.60090	10.31230	10.31910	-5.21570	00090	5.82900	.07090	-.01550	-.00050	.00220
10.344	13.633	.60080	9.81000	10.31880	-5.21750	.00000	5.82270	.06730	-.01870	.00340	.00100
10.353	28.774	.60000	8.77700	10.32690	-5.22650	.00000	5.81020	.07450	-.01600	.00400	.00010
10.378	43.866	.60060	7.73840	10.34080	-5.23270	.00000	5.80630	.06750	-.01310	.00320	.00000
	GRADIENT	.00000	-.06788	-.00028	-.00002	.00000	-.00092	-.00070	-.00046	.00077	-.00022

RUN NO. 821/ 0 RN/L = 3.24 GRADIENT INTERVAL = .00/ 12.00

ALPHAO	DZ	MACH	DX	DY	BETAO	PHI	ALPHAW	BETA	CY	CLN	CSL
14.674	1.671	.59920	9.44540	10.32750	-5.18870	.00000	5.85880	.03760	-.01910	-.00670	.00670
14.654	4.908	.60040	9.24120	10.33400	-5.18670	.00000	5.85820	.03530	-.01950	-.00410	.00620
14.651	9.491	.59950	8.92720	10.34080	-5.18670	.00000	5.85220	.01460	-.02400	.00160	.00450
14.654	16.765	.60000	8.43190	10.34180	-5.18990	.00000	5.84220	.01970	-.02470	.00460	.00290
14.662	31.845	.59930	7.40100	10.36010	-5.19990	.00000	5.82760	.00710	-.02770	.00990	.00000
14.672	46.937	.59980	6.36530	10.36580	-5.20490	.00000	5.81740	.01960	-.01640	.00470	.00060
14.669	61.681	.59950	5.35330	10.37880	-5.21170	.00000	5.80840	.02060	-.01350	.00360	.00030
	GRADIENT	.00002	-.06804	.00172	.00024	.00000	-.00090	-.00314	-.00067	.00110	-.00030

CA20 747/1 01 SI CARRIER DATA (AGN113) (01 DEC 75)

REFERENCE DATA

SREF = 5500.0000 SQ.FT. XMRP = 1339.9000 IN.XC
LREF = 327.7800 IN. YMRP = .0000 IN.YC
BREF = 2348.0400 IN. ZMRP = 190.8000 IN.ZC
SCALE = .0300

PARAMETRIC DATA

ALPHAC =	8.000	BETAC =	.000
ELV-IB =	.000	ELV-OB =	3.000
ELEVON =	5.000	MACH =	.600
BETAO =	-5.000	PHI =	.000
DX =	.000	DY =	10.000

RUN NO. 846/ 0 RN/L = 3.27 GRADIENT INTERVAL = .00/ 12.00

ALPHAO	DZ	MACH	DX	DY	BETAO	PHI	ALPHAH	BETA	CY	CLN	CSL
14.663	-.234	.59920	-2.08110	10.45250	-5.22980	.00000	9.71210	.05500	-.02980	-.00640	.00630
14.664	2.831	.59940	-2.49430	10.44140	-5.22280	.00000	9.70900	.05080	-.03060	-.00190	.00570
14.673	7.169	.59980	-3.08220	10.42750	-5.21910	.00000	9.70290	.05560	-.02930	.00120	.00440
14.695	14.825	.60010	-4.12640	10.41340	-5.21700	.00000	9.69360	.04350	-.03040	.00600	.00270
14.718	29.804	.59910	-6.18250	10.41430	-5.22390	.00000	9.68120	.04930	-.02650	.00820	.00080
14.736	44.793	.60010	-8.24790	10.42500	-5.23080	.00000	9.67210	.05230	-.01840	.00500	.00020
14.745	59.569	.60000	-10.29910	10.44120	-5.24020	.00000	9.66870	.05370	-.01430	.00370	.00000
	GRADIENT	.00009	-.13553	-.00320	.00085	.00000	-.00141	.00111	.00030	.00071	-.00030

CA20 747/1 01 SI CARRIER DATA (AGN114) (01 DEC 75)

REFERENCE DATA

SREF = 5500.0000 SQ.FT. XMRP = 1339.9000 IN.XC
LREF = 327.7800 IN. YMRP = .0000 IN.YC
BREF = 2348.0400 IN. ZMRP = 190.8000 IN.ZC
SCALE = .0300

PARAMETRIC DATA

ALPHAC =	8.000	BETAC =	.000
ELV-IB =	.000	ELV-OB =	3.000
ELEVON =	5.000	MACH =	.600
BETAO =	-5.000	PHI =	.000
DX =	10.000	DY =	10.000

RUN NO. 827/ 0 RN/L = 3.23 GRADIENT INTERVAL = .00/ 12.00

ALPHAO	DZ	MACH	DX	DY	BETAO	PHI	ALPHAH	BETA	CY	CLN	CSL
10.123	-2.709	.59950	9.42810	10.35950	-5.22610	.00000	9.67390	.08450	-.01670	-.00450	.00040
10.130	.522	.59900	8.99410	10.33760	-5.22180	.00000	9.67420	.09690	-.01830	-.00130	.00030
10.153	4.882	.59920	8.39770	10.32390	-5.21740	.00000	9.67530	.09450	-.01910	.00120	.00010
10.189	12.431	.60030	7.35470	10.32290	-5.21670	.00000	9.67190	.07600	-.02000	.00450	-.00030
10.262	27.432	.59980	5.29070	10.32470	-5.22390	.00000	9.66660	.08520	-.01380	.00280	-.00020
10.293	42.263	.60050	3.24330	10.33450	-5.23260	.00000	9.66240	.09340	-.01160	.00250	-.00040
	GRADIENT	.00005	-.13678	-.00314	.00101	.00000	.00025	-.00055	-.00018	.00057	-.00005

CA20 747/1 01 SI CARRIER DATA (AGN114) (01 DEC 75)

REFERENCE DATA

SREF = 5500.0000 SQ.FT. XMRP = 1339.9000 IN.XC
LREF = 327.7800 IN. YMRP = .0000 IN.YC
BREF = 2348.0400 IN. ZMRP = 190.8000 IN.ZC
SCALE = .0300

PARAMETRIC DATA

ALPHAC = 8.000 BETAC = .000
ELV-IB = .000 ELV-OB = 3.000
ELEVON = 5.000 MACH = .600
BETAO = -5.000 PHI = .000
DX = 10.000 DY = 10.000

RUN NO. 824/ 0 RN/L = 3.23 GRADIENT INTERVAL = .00/ 12.00

ALPHAO	DZ	MACH	DX	DY	BETAO	PHI	ALPHAH	BETA	CY	CLN	CSL
14.536	-.449	.59930	7.89880	10.38610	-5.19730	.00000	9.70270	.02410	-.02190	-.00650	.00430
14.541	2.724	.59980	7.47220	10.37240	-5.19280	.00000	9.69910	.03500	-.02540	-.00150	.00350
14.551	7.181	.60020	6.86660	10.36200	-5.18910	.00000	9.69690	.02350	-.02730	.00250	.00270
14.577	14.625	.60030	5.85320	10.35510	-5.18960	.00000	9.68780	.01980	-.02840	.00650	.00160
14.616	29.549	.59900	3.80340	10.35630	-5.19630	.00000	9.67940	.01950	-.02290	.00690	.00050
14.642	44.653	.60080	1.72210	10.36940	-5.20590	.00000	9.67220	.02160	-.01700	.00470	.00010
14.647	59.369	.59980	-.31530	10.37680	-5.21140	.00000	9.66720	.02260	-.01380	.00370	-.00010
	GRADIENT	-.00013	-.13868	-.00233	.00083	.00000	-.00049	-.00258	-.00043	.00090	-.00018

CA20 747/1 01 SI CARRIER DATA (AGN115) (01 DEC 75)

REFERENCE DATA

SREF = 5500.0000 SQ.FT. XMRP = 1339.9000 IN.XC
LREF = 327.7800 IN. YMRP = .0000 IN.YC
BREF = 2348.0400 IN. ZMRP = 190.8000 IN.ZC
SCALE = .0300

PARAMETRIC DATA

ALPHAC = 4.000 BETAC = 5.000
ELV-IB = .000 ELV-OB = 3.000
ELEVON = 5.000 MACH = .600
BETAO = -5.000 PHI = .000
DX = 10.000 DY = .000

RUN NO. 832/ 0 RN/L = 3.26 GRADIENT INTERVAL = .00/ 12.00

ALPHAO	DZ	MACH	DX	DY	BETAO	PHI	ALPHAH	BETA	CY	CLN	CSL
10.326	-1.459	.59910	10.80660	-1.58800	-5.24760	.00000	5.82090	5.05090	-.13150	.02930	-.02030
10.318	1.577	.59950	10.60980	-1.60360	-5.24580	.00000	5.82130	5.04970	-.12690	.03050	-.02050
10.308	6.160	.60020	10.30360	-1.62150	-5.24000	.00000	5.81960	5.05130	-.11900	.02880	-.01990
10.316	13.701	.60050	9.79660	-1.63320	-5.23490	.00000	5.81300	5.04780	-.10710	.02420	-.01840
10.331	28.714	.60090	8.77550	-1.63810	-5.23590	.00000	5.80800	5.05230	-.09770	.01940	-.01630
10.344	43.808	.60030	7.74110	-1.64140	-5.23430	.00000	5.80240	5.04990	-.10300	.02200	-.01580
	GRADIENT	.00015	-.06682	-.00391	.00127	.00000	-.00037	.00035	.00172	-.00037	.00013

ORIGINAL PAGE IS
OF POOR QUALITY

CA20 747/1 01 S1 CARRIER DATA (AGN115) (01 DEC 75)

REFERENCE DATA

SREF =	5500.0000 SQ.FT.	XMRP =	1339.9000 IN.XC
LREF =	327.7800 IN.	YMRP =	.0000 IN.YC
BREF =	2348.0400 IN.	ZMRP =	190.8000 IN.ZC
SCALE =	.0300		

PARAMETRIC DATA

ALPHAC =	4.000	BETAC =	5.000
ELV-IB =	.000	ELV-OB =	3.000
ELEVON =	5.000	MACH =	.600
BETAO =	-5.000	PHI =	.000
DX =	10.000	DY =	.000

RUN NO. 833/ 0 RN/L = 3.28 GRADIENT INTERVAL = .00/ 12.00

ALPHAO	DZ	MACH	DX	DY	BETAO	PHI	ALPHAW	BETA	CY	CLN	CSL
14.703	.481	.59990	9.50420	-1.51150	-5.21160	.00000	5.83950	5.03250	-.13350	.03210	-.02170
14.674	3.583	.59940	9.30230	-1.49580	-5.21110	.00000	5.84040	5.03840	-.13040	.03400	-.02190
14.669	7.765	.60000	9.02180	-1.51040	-5.21030	.00000	5.84090	5.04940	-.12010	.03050	-.02120
14.666	15.725	.60050	8.48640	-1.51760	-5.20820	.00000	5.83410	5.04680	-.10380	.02300	-.01950
14.665	30.510	.59960	7.48080	-1.52620	-5.20760	.00000	5.82210	5.06330	-.09040	.01580	-.01640
14.670	45.572	.59900	6.45060	-1.52710	-5.20570	.00000	5.81350	5.04380	-.09980	.02030	-.01580
14.674	60.497	.59960	5.42680	-1.53350	-5.20860	.00000	5.80710	5.05660	-.10590	.02320	-.01570
	GRADIENT	.00002	-.06628	-.00005	.00018	.00000	.00019	.00234	.00187	-.00025	.00007

CA20 747/1 01 S1 CARRIER DATA (AGN116) (01 DEC 75)

REFERENCE DATA

SREF =	5500.0000 SQ.FT.	XMRP =	1339.9000 IN.XC
LREF =	327.7800 IN.	YMRP =	.0000 IN.YC
BREF =	2348.0400 IN.	ZMRP =	190.8000 IN.ZC
SCALE =	.0300		

PARAMETRIC DATA

ALPHAC =	8.000	BETAC =	5.000
ELV-IB =	.000	ELV-OB =	3.000
ELEVON =	5.000	MACH =	.600
BETAO =	-5.000	PHI =	.000
DX =	10.000	DY =	.000

RUN NO. 839/ 0 RN/L = 3.26 GRADIENT INTERVAL = .00/ 12.00

ALPHAO	DZ	MACH	DX	DY	BETAO	PHI	ALPHAW	BETA	CY	CLN	CSL
10.294	-2.738	.59960	9.31160	-1.55500	-5.28470	.00000	9.65420	5.05110	-.12810	.02370	-.01490
10.306	.352	.60000	8.90260	-1.59040	-5.27000	.00000	9.65590	5.04940	-.12150	.02530	-.01520
10.320	3.098	.59990	8.53200	-1.61720	-5.25970	.00000	9.65370	5.05760	-.11630	.02480	-.01520
10.367	12.333	.60060	7.27900	-1.64760	-5.24150	.00000	9.65120	5.04550	-.10290	.02110	-.01420
10.428	27.414	.59940	5.21140	-1.66970	-5.23730	.00000	9.64660	5.06340	-.09690	.01840	-.01280
10.473	42.599	.60060	3.11550	-1.66980	-5.23650	.00000	9.64210	5.05310	-.10280	.02130	-.01240
	GRADIENT	-.00004	-.13496	-.00976	.00375	.00000	-.00080	.00299	.00189	-.00018	.00000

CA20 747/1 01 S1 CARRIER DATA (AGN116) (01 DEC 75)

REFERENCE DATA

SREF =	5500.0000 SQ.FT.	XMRP =	1339.9000 IN.XC		
LREF =	327.7800 IN.	YMRP =	.0000 IN.YC		
BREF =	2348.0400 IN.	ZMRP =	190.8000 IN.ZC		
SCALE =	.0300				

PARAMETRIC DATA

ALPHAC =	8.000	BETAC =	5.000
ELV-IB =	.000	ELV-OB =	3.000
ELEVON =	5.000	MACH =	.600
BETAO =	-5.000	PHI =	.000
DX =	10.000	DY =	.000

RUN NO. 838/ 0 RN/L = 3.26 GRADIENT INTERVAL = .00/ 12.00

ALPHAO	DZ	MACH	DX	DY	BETAO	PHI	ALPHAH	BETA	CY	CLN	CSL
14.538	-1.194	.59960	7.85930	-1.44850	-5.24490	.00000	9.67820	5.04490	-.13500	.02980	-.01690
14.540	1.941	.59950	7.54570	-1.48380	-5.23400	.00000	9.67800	5.04450	-.12710	.03010	-.01690
14.553	6.274	.59940	6.96660	-1.51170	-5.22180	.00000	9.67420	5.04780	-.11450	.02850	-.01620
14.577	13.736	.59950	5.95710	-1.55280	-5.21120	.00000	9.67180	5.06930	-.09880	.02000	-.01510
14.613	28.832	.59960	3.90000	-1.56200	-5.20860	.00000	9.66040	5.05950	-.08840	.01400	-.01280
14.640	43.865	.60040	1.83390	-1.57120	-5.20720	.00000	9.65590	5.06190	-.09930	.01990	-.01260
14.651	58.746	.60080	-.21820	-1.57450	-5.20980	.00000	9.64970	5.05760	-.10430	.02220	-.01230
	GRADIENT	-.00002	-.13365	-.00644	.00282	.00000	-.00088	.00076	.00291	-.00093	.00018

CA20 747/1 01 S1 CARRIER DATA (AGN117) (01 DEC 75)

REFERENCE DATA

SREF =	5500.0000 SQ.FT.	XMRP =	1339.9000 IN.XC		
LREF =	327.7800 IN.	YMRP =	.0000 IN.YC		
BREF =	2348.0400 IN.	ZMRP =	190.8000 IN.ZC		
SCALE =	.0300				

PARAMETRIC DATA

ALPHAC =	4.000	BETAC =	5.000
ELV-IB =	.000	ELV-OB =	3.000
ELEVON =	5.000	MACH =	.600
BETAO =	-5.000	PHI =	.000
DX =	.000	DY =	10.000

RUN NO. 845/ 0 RN/L = 3.29 GRADIENT INTERVAL = .00/ 12.00

ALPHAO	DZ	MACH	DX	DY	BETAO	PHI	ALPHAH	BETA	CY	CLN	CSL
10.498	-.906	.60040	.78870	9.22240	-5.21280	.00000	5.84530	5.04420	-.12950	.01980	-.01050
10.467	2.237	.59980	.57730	9.23320	-5.22240	.00000	5.84150	5.04890	-.12790	.02300	-.01180
10.441	6.513	.59920	.28940	9.22990	-5.23010	.00000	5.84000	5.05350	-.12760	.02640	-.01300
10.439	14.233	.60090	-.23340	9.23800	-5.23900	.00000	5.82980	5.03800	-.12150	.02630	-.01370
10.446	29.130	.59990	-1.25300	9.24510	-5.24980	.00000	5.81990	5.03760	-.11760	.02670	-.01450
10.455	44.219	.59980	-2.29460	9.25700	-5.25780	.00000	5.81540	5.03750	-.11530	.02690	-.01480
	GRADIENT	-.00014	-.05732	-.00077	-.00180	.00000	-.00035	.00108	.00007	.00080	-.00028

CA20 747/1 01 S1 CARRIER DATA (AGN118) (01 DEC 75)

REFERENCE DATA

SREF =	5500.0000 SQ.FT.	XMRP =	1339.9000 IN.XC		
LREF =	327.7800 IN.	YMRP =	.0000 IN.YC		
BREF =	2348.0400 IN.	ZMRP =	190.8000 IN.ZC		
SCALE =	.0300				

PARAMETRIC DATA

ALPHAC =	4.000	BETAC =	5.000
ELV-IB =	.000	ELV-OB =	3.000
ELEVON =	5.000	MACH =	.600
BETAO =	-5.000	PHI =	.000
DX =	10.000	DY =	10.000

RUN NO. 817/ 0 RN/L = 3.28 GRADIENT INTERVAL = .00/ 12.00

ALPHAO	DZ	MACH	DX	DY	BETAO	PHI	ALPHAW	BETA	CY	CLN	CSL
10.387	-1.428	.60050	10.80850	8.27130	-5.19700	.00000	5.82810	5.09010	-.12600	.01990	-.01220
10.368	1.603	.59990	10.60430	8.27890	-5.20120	.00000	5.83120	5.07890	-.12630	.02350	-.01320
10.354	6.192	.59960	10.29750	8.27540	-5.20600	.00000	5.82650	5.09060	-.12750	.02760	-.01410
10.352	13.627	.60060	9.79330	8.28270	-5.21310	.00000	5.82320	5.08370	-.12110	.02660	-.01450
10.368	28.854	.60000	8.75340	8.29080	-5.22320	.00000	5.81190	5.08340	-.11750	.02690	-.01500
10.375	43.802	.59950	7.72900	8.29670	-5.22860	.00000	5.80650	5.08390	-.11480	.02640	-.01510
	GRADIENT	-.00007	-.06685	-.00076	-.00105	.00000	-.00102	.00255	-.00026	.00089	-.00020

RUN NO. 822/ 0 RN/L = 3.25 GRADIENT INTERVAL = .00/ 12.00

ALPHAO	DZ	MACH	DX	DY	BETAO	PHI	ALPHAW	BETA	CY	CLN	CSL
14.717	1.874	.59970	9.42000	8.37420	-5.17810	.00000	5.85110	5.08930	-.13040	.02020	-.01120
14.688	4.769	.59960	9.22800	8.37710	-5.17940	.00000	5.85190	5.09400	-.12960	.02360	-.01200
14.674	9.382	.59990	8.91570	8.38120	-5.18320	.00000	5.84940	5.09720	-.13200	.02850	-.01270
14.665	16.975	.59990	8.40160	8.38660	-5.18790	.00000	5.83980	5.08990	-.12580	.02800	-.01350
14.668	31.950	.59900	7.37290	8.39530	-5.19670	.00000	5.83260	5.09040	-.11990	.02760	-.01420
14.673	46.749	.60020	6.36880	8.40610	-5.20180	.00000	5.81470	5.08240	-.11830	.02790	-.01470
14.668	61.783	.60020	5.33720	8.41540	-5.20920	.00000	5.80610	5.09090	-.11580	.02710	-.01480
	GRADIENT	.00003	-.06721	.00093	-.00069	.00000	-.00026	.00102	-.00024	.00110	-.00020

CA20 747/1 01 SI CARRIER DATA (AGN119) (01 DEC 75)

REFERENCE DATA

SREF =	5500.0000 SQ.FT.	XMRP =	1339.9000 IN.XC		
LREF =	327.7800 IN.	YMRP =	.0000 IN.YC		
BREF =	2348.0400 IN.	ZMRP =	190.8000 IN.ZC		
SCALE =	.0300				

PARAMETRIC DATA

ALPHAC =	8.000	BETAC =	5.000
ELV-IB =	.000	ELV-OB =	3.000
ELEVON =	5.000	MACH =	.600
BETAO =	-5.000	PHI =	.000
DX =	10.000	DY =	10.000

RUN NO. 828/ 0 RN/L = 3.24 GRADIENT INTERVAL = .00/ 12.00

ALPHAO	DZ	MACH	DX	DY	BETAO	PHI	ALPHAW	BETA	CY	CLN	CSL
10.232	-3.158	.59960	9.45520	8.21890	-5.17890	.00000	9.67640	5.11250	-.12310	.01570	-.00840
10.221	-.170	.59930	9.04460	8.24760	-5.19470	.00000	9.67420	5.10090	-.12290	.02010	-.00970
10.228	4.274	.60060	8.43850	8.25130	-5.20440	.00000	9.67370	5.10550	-.12220	.02330	-.01040
10.086	8.076	.60080	8.00330	8.24320	-5.21030	.00000	9.67500	5.10510	-.11830	.02360	-.01090
10.098	10.921	.60030	7.61260	8.24420	-5.21170	.00000	9.67450	5.09750	-.11630	.02350	-.01090
10.159	26.257	.59990	5.50150	8.24330	-5.22100	.00000	9.66680	5.09620	-.11340	.02490	-.01150
10.305	41.630	.59980	3.31110	8.25650	-5.22860	.00000	9.65440	5.09690	-.11070	.02420	-.01160
	GRADIENT	-.00004	-.12370	-.00113	-.00112	.00000	.00013	-.00114	.00090	.00003	-.00008

RUN NO. 825/ 0 RN/L = 3.22 GRADIENT INTERVAL = .00/ 12.00

ALPHAO	DZ	MACH	DX	DY	BETAO	PHI	ALPHAW	BETA	CY	CLN	CSL
14.586	-.647	.59910	7.90360	8.38630	-5.17870	.00000	9.69920	5.10990	-.13060	.01840	-.00910
14.574	2.288	.59900	7.50930	8.39730	-5.18080	.00000	9.69640	5.09010	-.13130	.02290	-.00980
14.572	6.895	.60040	6.88610	8.37630	-5.18510	.00000	9.69580	5.10230	-.13030	.02640	-.01010
14.589	14.523	.59960	5.84870	8.36390	-5.18580	.00000	9.69090	5.10280	-.12250	.02570	-.01050
14.622	29.445	.59990	3.80460	8.35910	-5.19440	.00000	9.69180	5.09570	-.11580	.02520	-.01090
14.641	44.416	.59990	1.74040	8.36180	-5.20120	.00000	9.67480	5.10310	-.11410	.02560	-.01120
14.651	59.222	.60020	-.31430	8.37110	-5.20880	.00000	9.66940	5.10360	-.11220	.02510	-.01130
	GRADIENT	.00030	-.13524	-.00239	-.00093	.00000	-.00013	.00265	.00022	.00076	-.00007

ORIGINAL PAGE IS
OF POOR QUALITY

CA20 747/1 01 S1 CARRIER DATA (AGN120) (01 DEC 75)

REFERENCE DATA

SREF =	5500.0000 SQ.FT.	XMRP =	1339.9000 IN.XC		
LREF =	327.7800 IN.	YMRP =	.0000 IN.YC		
BREF =	2348.0400 IN.	ZMRP =	190.8000 IN.ZC		
SCALE =	.0300				

PARAMETRIC DATA

ALPHAC =	4.000	BETAC =	-5.000
ELV-IB =	.000	ELV-OB =	.000
ELEVON =	5.000	MACH =	.600
BETAO =	-5.000	PHI =	.000
DX =	.000	DY =	10.000

RUN NO. 765/ 0 RN/L = 3.28 GRADIENT INTERVAL = .00/ 12.00

ALPHAO	DZ	MACH	DX	DY	BETAO	PHI	ALPHAH	BETA	CY	CLN	CSL
10.515	-1.996	.60090	.84350	11.45910	-5.24180	.00000	5.87130	-4.98110	.08040	-.02070	.01940
10.489	1.101	.59950	.64030	11.44630	-5.23360	.00000	5.86780	-4.98020	.08210	-.02180	.01920
10.487	5.844	.60040	.31530	11.45310	-5.23550	.00000	5.86370	-4.98810	.08310	-.02150	.01950
10.491	13.003	.59970	-.17740	11.46190	-5.23990	.00000	5.85710	-4.98220	.08140	-.01950	.01710
10.505	28.256	.60020	-1.23080	11.48620	-5.25290	.00000	5.84900	-4.99070	.08330	-.01850	.01560
10.512	43.053	.60090	-2.24980	11.50370	-5.26170	.00000	5.83960	-4.99000	.08700	-.01940	.01460
10.515	46.935	.59980	-2.51800	11.50600	-5.26380	.00000	5.83580	-4.98180	.08810	-.02000	.01470
	GRADIENT	.00019	-.06851	.00143	-.00040	.00000	-.00086	-.00167	.00021	.00006	-.00015

RUN NO. 768/ 0 RN/L = 3.24 GRADIENT INTERVAL = .00/ 12.00

ALPHAO	DZ	MACH	DX	DY	BETAO	PHI	ALPHAH	BETA	CY	CLN	CSL
14.817	.070	.60020	-.31490	11.36860	-5.21580	.00000	5.90170	-4.98100	.06830	-.02110	.02410
14.790	3.179	.60040	-.52360	11.37120	-5.20880	.00000	5.89430	-4.97990	.07290	-.02210	.02350
14.781	7.513	.60080	-.82800	11.38430	-5.21010	.00000	5.89240	-4.98870	.07340	-.02090	.02260
14.780	9.056	.60090	-.93650	11.38410	-5.21080	.00000	5.89280	-4.98120	.07350	-.02060	.02240
14.776	15.044	.59940	-1.35410	11.39230	-5.21500	.00000	5.86410	-4.98340	.07200	-.01830	.02030
14.778	30.013	.59960	-2.39160	11.42080	-5.22690	.00000	5.86850	-4.99850	.06470	-.01010	.01580
14.777	44.971	.60010	-3.42780	11.43380	-5.23760	.00000	5.85800	-4.98540	.07680	-.01500	.01500
14.777	60.036	.60070	-4.47510	11.45160	-5.24820	.00000	5.85010	-4.98230	.08650	-.01940	.01480
	GRADIENT	.00008	-.06931	.00197	.00045	.00000	-.00094	-.00045	.00052	.00009	-.00019

CA20 747/1 01 S1 CARRIER DATA (AGN121) (01 DEC 75)

REFERENCE DATA

SREF = 5500.0000 SQ.FT. XMRP = 1339.9000 IN.XC
LREF = 327.7800 IN. YMRP = .0000 IN.YC
BREF = 2348.0400 IN. ZMRP = 190.8000 IN.ZC
SCALE = .0300

PARAMETRIC DATA

ALPHAC = 8.000 BETAC = -5.000
ELV-IB = .000 ELV-OB = .000
ELEVON = 5.000 MACH = .600
BETAO = -5.000 PHI = .000
DX = .000 DY = 10.000

RUN NO. 766/ 0 RN/L = 3.25 GRADIENT INTERVAL = .00/ 12.00

ALPHAO	DZ	MACH	DX	DY	BETAO	PHI	ALPHAW	BETA	CY	CLN	CSL
10.296	-3.648	.60030	-.59030	11.55550	-5.26430	.00000	9.75040	-4.98270	.07150	-.01640	.01430
10.312	-.567	.60080	-.99740	11.51870	-5.24420	.00000	9.74600	-4.98880	.07410	-.01820	.01510
10.352	4.042	.60030	-1.63380	11.50050	-5.23340	.00000	9.74400	-4.98900	.07580	-.01810	.01550
10.398	11.503	.60030	-2.66550	11.49930	-5.23310	.00000	9.73990	-4.99020	.07640	-.01680	.01530
10.447	26.756	.59940	-4.78130	11.52080	-5.24770	.00000	9.73480	-4.98150	.08160	-.01790	.01520
10.474	41.500	.60020	-6.83220	11.53820	-5.25820	.00000	9.72930	-4.97300	.08460	-.01860	.01500
10.480	46.724	.59970	-7.56360	11.54730	-5.26270	.00000	9.72760	-4.98040	.08600	-.01910	.01500
	GRADIENT	.00000	-.13828	-.00016	.00004	.00000	-.00055	-.00016	.00008	.00017	-.00003

RUN NO. 767/ 0 RN/L = 3.24 GRADIENT INTERVAL = .00/ 12.00

ALPHAO	DZ	MACH	DX	DY	BETAO	PHI	ALPHAW	BETA	CY	CLN	CSL
14.680	-1.558	.60050	-1.92420	11.43940	-5.22370	.00000	9.78050	-4.97870	.06440	-.02120	.02070
14.680	1.597	.60010	-2.35280	11.42690	-5.20980	.00000	9.77830	-4.99750	.06580	-.02010	.02040
14.688	5.926	.59990	-2.94660	11.41730	-5.20470	.00000	9.77290	-4.98780	.06930	-.01970	.01930
14.707	13.492	.60040	-3.98700	11.41840	-5.20750	.00000	9.75940	-4.98580	.06340	-.01350	.01780
14.735	28.283	.59950	-6.03700	11.44460	-5.22150	.00000	9.74920	-4.98790	.06650	-.01110	.01570
14.751	43.438	.59960	-8.14790	11.46360	-5.23100	.00000	9.74110	-4.98370	.07750	-.01560	.01530
14.755	58.184	.60040	-10.20510	11.48640	-5.24360	.00000	9.73190	-4.98890	.08360	-.01820	.01520
	GRADIENT	-.00005	-.13716	-.00222	.00118	.00000	-.00125	-.00007	.00081	.00009	-.00025

CA20 747/1 01 S1 CARRIER DATA (AGN122) (01 DEC 75)

REFERENCE DATA

SREF = 5500.0000 SQ.FT. XMRP = 1339.9000 IN.XC
LREF = 327.7800 IN. YMRP = .0000 IN.YC
BREF = 2348.0400 IN. ZMRP = 190.8000 IN.ZC
SCALE = .0300

PARAMETRIC DATA

ALPHAC = 4.000 BETAC = .000
ELV-IB = .000 ELV-OB = .000
ELEVON = 5.000 MACH = .600
BETAO = -5.000 PHI = .000
DX = .000 DY = 10.000

RUN NO. 761/ 0 RN/L = 3.32 GRADIENT INTERVAL = .00/ 12.00

ALPHAO	DZ	MACH	DX	DY	BETAO	PHI	ALPHAW	BETA	CY	CLN	CSL
10.533	-1.760	.60020	.83720	10.39810	-5.23790	.00000	5.87650	-.00910	-.01750	-.00620	.00540
10.518	1.242	.60000	.63340	10.40180	-5.23580	.00000	5.87280	-.01120	-.01710	-.00390	.00440
10.511	5.718	.60020	.32880	10.40050	-5.23670	.00000	5.86530	-.01460	-.01840	-.00030	.00300
10.517	13.048	.59950	-.17620	10.40330	-5.24020	.00000	5.85710	-.01870	-.02190	.00420	.00140
10.529	28.455	.60000	-1.23960	10.41620	-5.25120	.00000	5.84810	-.01200	-.01870	.00520	.00010
10.535	43.071	.60080	-2.24820	10.43250	-5.26010	.00000	5.84030	-.01840	-.01390	.00380	-.00030
10.533	47.085	.60070	-2.52230	10.43510	-5.26270	.00000	5.83630	-.01030	-.01300	.00340	-.00040
	GRADIENT	.00004	-.06805	-.00029	-.00020	.00000	-.00168	-.00076	-.00029	.00080	-.00031

RUN NO. 764/ 0 RN/L = 3.26 GRADIENT INTERVAL = .00/ 12.00

ALPHAO	DZ	MACH	DX	DY	BETAO	PHI	ALPHAW	BETA	CY	CLN	CSL
14.817	.178	.60040	-.29330	10.38910	-5.21580	.00000	5.90850	-.00220	-.02980	-.00560	.00940
14.797	3.067	.60070	-.49760	10.40960	-5.21220	.00000	5.90420	-.01100	-.02620	-.00450	.00830
14.787	7.581	.59930	-.81630	10.41730	-5.21290	.00000	5.89670	-.01520	-.02770	.00010	.00690
14.780	15.133	.59990	-1.34110	10.42580	-5.21590	.00000	5.88060	-.01750	-.02550	.00270	.00430
14.773	29.995	.59930	-2.37300	10.44100	-5.22670	.00000	5.86560	-.01800	-.03280	.01170	.00040
14.775	45.089	.60000	-3.41890	10.45180	-5.23340	.00000	5.85390	-.01260	-.01900	.00580	.00040
14.771	60.069	.60020	-4.45690	10.47380	-5.24560	.00000	5.84420	-.01110	-.01460	.00420	.00000
	GRADIENT	-.00016	-.07063	.00362	.00034	.00000	-.00160	-.00168	.00023	.00079	-.00034

CA20 747/1 01 S1 CARRIER DATA (AGN123) (01 DEC 75)

REFERENCE DATA

SREF =	5500.0000 SQ.FT.	XMRP =	1339.9000 IN.XC		
LREF =	327.7800 IN.	YMRP =	.0000 IN.YC		
BREF =	2348.0400 IN.	ZMRP =	190.8000 IN.ZC		
SCALE =	.0300				

PARAMETRIC DATA

ALPHAC =	8.000	BETAC =	.000
ELV-IB =	.000	ELV-OB =	.000
ELEVON =	5.000	MACH =	.600
BETAO =	-5.000	PHI =	.000
DX =	.000	DY =	10.000

RUN NO. 762/ 0 RN/L = 3.28 GRADIENT INTERVAL = .00/ 12.00

ALPHAO	DZ	MACH	DX	DY	BETAO	PHI	ALPHAW	BETA	CY	CLN	CSL
10.341	-3.606	.60010	-.58610	10.45990	-5.25020	.00000	9.74490	-.00690	-.01900	-.00590	-.00068
10.346	-.403	.59950	-1.02000	10.44290	-5.24670	.00000	9.74600	-.01040	-.02130	-.00220	-.00060
10.375	5.542	.60010	-1.83100	10.41910	-5.23990	.00000	9.74280	-.01460	-.02280	.00230	-.00129
10.411	11.472	.60010	-2.65140	10.41120	-5.23870	.00000	9.73990	-.01770	-.02460	.00560	-.00190
10.469	26.651	.59920	-4.75740	10.41420	-5.24700	.00000	9.73260	-.00880	-.01700	.00430	-.00228
10.496	41.561	.59930	-6.83220	10.42860	-5.25710	.00000	9.72730	-.00810	-.01380	.00360	-.00240
10.503	46.845	.60020	-7.56930	10.43080	-5.25900	.00000	9.72580	-.00790	-.01330	.00340	-.00230
	GRADIENT	.00000	-.13835	-.00133	.00020	.00000	-.00049	-.00052	-.00030	.00056	-.00012

RUN NO. 763/ 0 RN/L = 3.26 GRADIENT INTERVAL = .00/ 12.00

ALPHAO	DZ	MACH	DX	DY	BETAO	PHI	ALPHAW	BETA	CY	CLN	CSL
14.689	-1.516	.60080	-1.91500	10.45900	-5.22780	.00000	9.77730	-.00670	-.03070	-.00660	.00558
14.691	2.914	.60020	-2.51930	10.44440	-5.21870	.00000	9.77300	-.01230	-.03170	-.00060	.00429
14.699	7.487	.59980	-3.14680	10.42920	-5.21400	.00000	9.76670	-.00730	-.03040	.00230	.00308
14.711	13.631	.59930	-3.99010	10.41880	-5.21290	.00000	9.75730	-.01900	-.03240	.00660	.00178
14.742	28.443	.59990	-6.03760	10.42940	-5.22190	.00000	9.74450	-.02910	-.02870	.00930	-.00050
14.754	43.346	.60010	-8.11400	10.44480	-5.22970	.00000	9.73780	-.01780	-.01910	.00550	-.00110
14.753	58.323	.60020	-10.20620	10.46770	-5.24130	.00000	9.72950	-.00890	-.01560	.00430	-.00170
	GRADIENT	-.00009	-.13722	-.00332	.00103	.00000	-.00139	.00109	.00028	.00063	-.00026

ORIGINAL PAGE IS
OF POOR QUALITY

CA20 747/1 01 SI CARRIER DATA (AGN124) (01 DEC 75)

REFERENCE DATA

SREF =	5500.0000 SQ.FT.	XMRP =	1339.9000 IN.XC		
LREF =	327.7800 IN.	YMRP =	.0000 IN.YC		
BREF =	2348.0400 IN.	ZMRP =	190.8000 IN.ZC		
SCALE =	.0300				

PARAMETRIC DATA

ALPHAC =	4.000	BETAC =	5.000
ELV-IB =	.000	ELV-OB =	.000
ELEVON =	5.000	MACH =	.600
BETAO =	-5.000	PHI =	.000
DX =	.000	DY =	10.000

RUN NO. 769/ 0 RN/L = 3.24 GRADIENT INTERVAL = .00/ 12.00

ALPHAO	DZ	MACH	DX	DY	BETAO	PHI	ALPHAW	BETA	CY	CLN	CSL
10.561	-1.968	.60050	.84330	9.22610	-5.20960	.00000	5.87540	5.00580	-.12880	.01980	-.01078
10.533	1.261	.60040	.62320	9.23700	-5.21850	.00000	5.87370	5.00280	-.12770	.02290	-.01190
10.511	5.843	.60050	.31090	9.24170	-5.22710	.00000	5.87190	4.98430	-.12660	.02610	-.01310
10.506	13.217	.60020	-.19490	9.24420	-5.23460	.00000	5.86400	4.98420	-.12140	.02630	-.01380
10.514	28.279	.59950	-1.23590	9.25270	-5.24690	.00000	5.85360	4.99140	-.11730	.02680	-.01460
10.514	42.986	.59930	-2.25500	9.26120	-5.25480	.00000	5.84920	4.99310	-.11520	.02680	-.01510
10.518	46.942	.59980	-2.52760	9.26360	-5.25640	.00000	5.84540	4.99920	-.11450	.02660	-.01510
	GRADIENT	.00002	-.05816	.00103	-.00188	.00000	-.00039	-.00404	.00024	.00070	-.00026

RUN NO. 772/ 0 RN/L = 3.23 GRADIENT INTERVAL = .00/ 12.00

ALPHAO	DZ	MACH	DX	DY	BETAO	PHI	ALPHAW	BETA	CY	CLN	CSL
14.954	.809	.60000	-.36940	9.30510	-5.19510	.00000	5.90150	4.99800	-.13740	.01950	-.00750
14.915	4.128	.59920	-.59930	9.32970	-5.20000	.00000	5.89460	4.99270	-.13780	.02510	-.00930
14.888	10.992	.60080	-1.07290	9.34180	-5.20770	.00000	5.88800	4.99680	-.13470	.02900	-.01130
14.877	18.691	.60050	-1.60570	9.35210	-5.21430	.00000	5.87640	4.99090	-.12570	.02720	-.01240
14.871	33.530	.60040	-2.63000	9.36710	-5.22520	.00000	5.85860	4.98910	-.12310	.02920	-.01400
14.867	48.582	.60010	-3.67260	9.37470	-5.23120	.00000	5.84820	4.98940	-.11990	.02890	-.01480
14.860	63.797	.59940	-4.73190	9.39310	-5.24340	.00000	5.84160	4.99840	-.11610	.02750	-.01490
	GRADIENT	.00010	-.06907	.00333	-.00122	.00000	-.00127	-.00001	.00029	.00088	-.00036

CA20 747/1 01 SI CARRIER DATA (AGN125) (01 DEC 75)

REFERENCE DATA

SREF =	5500.0000 SQ.FT.	XMRP =	1339.9000 IN.XC		
LREF =	327.7800 IN.	YMRP =	.0000 IN.YC		
BREF =	2348.0400 IN.	ZMRP =	190.8000 IN.ZC		
SCALE =	.0300				

PARAMETRIC DATA

ALPHAC =	0.000	BETAC =	5.000
ELV-IB =	.000	ELV-OB =	.000
ELEVON =	5.000	MACH =	.600
BETAO =	-5.000	PHI =	.000
DX =	.000	DY =	10.000

RUN NO. 770/ 0 RN/L = 3.23 GRADIENT INTERVAL = .00/ 12.00

ALPHAO	DZ	MACH	DX	DY	BETAO	PHI	ALPHAW	BETA	CY	CLN	CSL
10.389	-3.483	.59990	-.59100	9.18540	-5.19210	.00000	9.73870	5.00480	-.12670	.01550	-.00910
10.364	-.364	.60040	-1.01940	9.20850	-5.21240	.00000	9.73710	5.00040	-.12550	.02000	-.00960
10.376	4.046	.59980	-1.62970	9.20920	-5.22250	.00000	9.73610	5.00530	-.12360	.02300	-.01040
10.412	11.707	.59980	-2.68950	9.21350	-5.23110	.00000	9.73290	4.98950	-.11930	.02430	-.01090
10.454	26.499	.59960	-4.73520	9.21380	-5.24260	.00000	9.72830	4.99510	-.11570	.02550	-.01160
10.479	41.497	.59910	-6.81820	9.22210	-5.25140	.00000	9.72080	4.99590	-.11180	.02480	-.01170
10.486	46.758	.59950	-7.55090	9.22410	-5.25460	.00000	9.71940	5.00350	-.11150	.02490	-.01190
	GRADIENT	.00000	-.13820	.00056	-.00112	.00000	-.00042	-.00219	.00056	.00017	-.00007

RUN NO. 771/ 0 RN/L = 3.23 GRADIENT INTERVAL = .00/ 12.00

ALPHAO	DZ	MACH	DX	DY	BETAO	PHI	ALPHAW	BETA	CY	CLN	CSL
14.823	-.894	.59960	-2.03280	9.33230	-5.19580	.00000	9.76760	5.01150	-.13530	.01600	-.00800
14.797	1.955	.60050	-2.41590	9.34470	-5.20380	.00000	9.76340	4.99810	-.13600	.02180	-.00970
14.791	6.399	.59990	-3.02280	9.33420	-5.20750	.00000	9.75890	4.99440	-.13420	.02580	-.01060
14.798	14.059	.60070	-4.07020	9.31890	-5.21020	.00000	9.74920	5.00170	-.12670	.02630	-.01140
14.819	28.947	.59990	-6.12930	9.31700	-5.21810	.00000	9.74410	4.99360	-.11990	.02680	-.01090
14.842	43.761	.60020	-8.18550	9.32610	-5.22580	.00000	9.73320	5.00170	-.11640	.02660	-.01120
14.847	59.029	.59990	-10.31650	9.34040	-5.23500	.00000	9.72670	5.00260	-.11330	.02570	-.01140
	GRADIENT	-.00014	-.13657	-.00236	-.00083	.00000	-.00101	-.00083	.00041	.00090	-.00020

CA20 747/1 02 S1 CARRIER DATA (AGN126) (01 DEC 75)

REFERENCE DATA

SREF = 5500.0000 SQ.FT. XMRP = 1339.9000 IN.XC
LREF = 327.7800 IN. YMRP = .0000 IN.YC
BREF = 2348.0400 IN. ZMRP = 190.8000 IN.ZC
SCALE = .0300

PARAMETRIC DATA

ALPHAC = 4.000 BETAC = -5.000
ELV-IB = .000 ELV-OB = 3.000
ELEVON = 5.000 MACH = .600
BETAO = .000 PHI = .000
DX = .000 DY = .000

RUN NO. 656/ 0 RN/L = 3.29 GRADIENT INTERVAL = -1.00/ 4.00

ALPHAO	DZ	MACH	DX	DY	BETAO	PHI	ALPHAH	BETA	CY	CLN	CSL
10.466	-1.096	.60040	10.78960	1.93190	.02640	.00000	5.87110	-4.99100	.10100	-.01750	.01590
10.459	2.127	.59920	10.56940	1.94420	.01790	.00000	5.87110	-4.97980	.10010	-.02110	.01640
10.459	6.620	.60000	10.26250	1.96080	.01060	.00000	5.86390	-4.98600	.09850	-.02260	.01660
10.464	14.115	.59980	9.74740	1.97410	.00250	.00000	5.85590	-4.97810	.09520	-.02260	.01640
10.475	29.115	.59940	8.71410	1.99380	-.00580	.00000	5.84530	-4.98080	.08810	-.01960	.01520
10.481	44.160	.59950	7.67070	2.00190	-.00610	.00000	5.84030	-4.98800	.08890	-.02010	.01480
10.485	48.200	.59920	7.39520	2.00180	-.00610	.00000	5.83410	-4.98750	.08980	-.02070	.01470
	GRADIENT	.00000	.00000	.00000	.00000	.00000	.00000	.00000	.00000	.00000	.00000

CA20 747/1 02 S1 CARRIER DATA (AGN127) (01 DEC 75)

REFERENCE DATA

SREF = 5500.0000 SQ.FT. XMRP = 1339.9000 IN.XC
LREF = 327.7800 IN. YMRP = .0000 IN.YC
BREF = 2348.0400 IN. ZMRP = 190.8000 IN.ZC
SCALE = .0300

PARAMETRIC DATA

ALPHAC = 4.000 BETAC = -5.000
ELV-IB = .000 ELV-OB = 3.000
ELEVON = 5.000 MACH = .600
BETAO = .000 PHI = .000
DX = 10.000 DY = .000

RUN NO. 657/ 0 RN/L = 3.34 GRADIENT INTERVAL = -1.00/ 4.00

ALPHAO	DZ	MACH	DX	DY	BETAO	PHI	ALPHAH	BETA	CY	CLN	CSL
10.433	-1.292	.59920	10.78030	1.92340	.02690	.00000	5.86290	-4.96760	.09990	-.01770	.01590
10.431	1.807	.59920	10.57160	1.93720	.01910	.00000	5.86170	-4.96380	.10160	-.02180	.01630
10.433	6.229	.60000	10.27180	1.94970	.01210	.00000	5.85780	-4.96200	.10090	-.02350	.01650
10.444	14.070	.60000	9.73470	1.96260	.00440	.00000	5.85180	-4.95390	.09830	-.02380	.01650
10.465	28.827	.59930	8.71920	1.97980	-.00320	.00000	5.84330	-4.95700	.09020	-.02020	.01540
10.477	43.949	.59940	7.67520	1.99260	-.00450	.00000	5.83720	-4.97220	.09070	-.02060	.01490
10.478	48.212	.59960	7.38180	1.99180	-.00550	.00000	5.83600	-4.96410	.09120	-.02080	.01490
	GRADIENT	.00000	.00000	.00000	.00000	.00000	.00000	.00000	.00000	.00000	.00000

CA20 747/1 02 S1 CARRIER DATA (AGN128) (01 DEC 75)

REFERENCE DATA

SREF = 5500.0000 SQ.FT. XMRP = 1339.9000 IN.XC
LREF = 327.7800 IN. YMRP = .0000 IN.YC
BREF = 2348.0400 IN. ZMRP = 190.8000 IN.ZC
SCALE = .0300

PARAMETRIC DATA

ALPHAC = 4.000 BETAC = -5.000
ELV-IB = .000 ELV-OB = 3.000
ELEVON = 5.000 MACH = .600
BETAO = .000 PHI = .000
DX = 20.000 DY = .000

RUN NO. 669/ 0 RN/L = 3.32 GRADIENT INTERVAL = -1.00/ 4.00

ALPHAO	DZ	MACH	DX	DY	BETAO	PHI	ALPHAW	BETA	CY	CLN	CSL
10.338	-1.706	.60020	20.78390	2.80120	.02290	.00000	5.84610	-4.97720	.09780	-.01680	.01490
10.333	1.490	.59930	20.57030	2.80850	.01620	.00000	5.84520	-4.96530	.10120	-.02140	.01590
10.348	5.895	.59930	20.26620	2.82240	.00870	.00000	5.84260	-4.96280	.10220	-.02400	.01610
10.360	13.450	.59940	19.75050	2.84000	.00250	.00000	5.83790	-4.97010	.09970	-.02430	.01640
10.383	28.424	.60060	18.72420	2.84590	-.00400	.00000	5.83120	-4.95760	.09160	-.02090	.01540
10.396	43.434	.59980	17.69220	2.86070	-.00470	.00000	5.82390	-4.97340	.09070	-.02050	.01480
10.401	48.251	.60010	17.35740	2.86070	-.00700	.00000	5.82450	-4.96530	.09150	-.02090	.01480
	GRADIENT	.00000	.00000	.00000	.00000	.00000	.00000	.00000	.00000	.00000	.00000

CA20 747/1 02 S1 CARRIER DATA (AGN129) (01 DEC 75)

REFERENCE DATA

SREF = 5500.0000 SQ.FT. XMRP = 1339.9000 IN.XC
LREF = 327.7800 IN. YMRP = .0000 IN.YC
BREF = 2348.0400 IN. ZMRP = 190.8000 IN.ZC
SCALE = .0300

PARAMETRIC DATA

ALPHAC = 4.000 BETAC = .000
ELV-IB = .000 ELV-OB = 3.000
ELEVON = 5.000 MACH = .600
BETAO = .000 PHI = .000
DX = .000 DY = .000

RUN NO. 652/ 0 RN/L = 3.31 GRADIENT INTERVAL = -1.00/ 4.00

ALPHAO	DZ	MACH	DX	DY	BETAO	PHI	ALPHAW	BETA	CY	CLN	CSL
10.500	-.437	.60030	.77380	-.01920	.00560	.00000	5.87480	.04740	-.00840	-.00040	.00040
10.491	2.659	.59970	.56060	-.01970	.00480	.00000	5.87310	.05460	-.00840	.00020	.00030
10.491	7.176	.60030	.25130	-.01380	.00350	.00000	5.86650	.03860	-.00860	.00080	.00020
10.496	14.694	.59940	-.26210	-.01610	.00270	.00000	5.85330	.05350	-.00930	.00150	.00000
10.508	26.858	.59930	-1.10100	-.00610	-.00180	.00000	5.84700	.04480	-.01120	.00260	-.00020
10.510	29.527	.59940	-1.28250	-.00180	-.00280	.00000	5.84330	.03710	-.01100	.00260	-.00040
10.521	44.750	.59910	-2.33460	-.00040	-.00350	.00000	5.83550	.04500	-.01060	.00250	-.00030
10.524	48.090	.60070	-2.56460	.00190	-.00470	.00000	5.83420	.04510	-.01010	.00230	-.00040
	GRADIENT	-.00019	-.06987	-.00016	-.00026	.00000	-.00055	.00233	.00000	.00019	-.00003

CA20 747/1 02 SI CARRIER DATA (AGN129) (01 DEC 75)

REFERENCE DATA

SREF = 5500.0000 SQ.FT. XMRP = 1339.9000 IN.XC
LREF = 327.7800 IN. YMRP = .0000 IN.YC
BREF = 2348.0400 IN. ZMRP = 190.8000 IN.ZC
SCALE = .0300

PARAMETRIC DATA

ALPHAC =	4.000	BETAC =	.000
ELV-IB =	.000	ELV-OB =	3.000
ELEVON =	5.000	MACH =	.600
BETAO =	.000	PHI =	.000
DX =	.000	DY =	.000

RUN NO. 653/ 0 RN/L = 3.29 GRADIENT INTERVAL = -1.00/ 4.00

ALPHAO	DZ	MACH	DX	DY	BETAO	PHI	ALPHAW	BETA	CY	CLN	CSL
14.760	1.601	.60030	-.37590	-.00820	-.00010	.00000	5.98450	.03130	-.00780	-.00030	.00048
14.750	4.801	.60000	-.60190	-.00730	-.00160	.00000	5.89740	.04580	-.00950	.00090	.00020
14.743	9.200	.59960	-.90970	-.00670	-.00130	.00000	5.89170	.04590	-.00920	.00100	.00020
14.738	16.514	.59900	-1.41430	-.00350	-.00310	.00000	5.87580	.05400	-.00940	.00080	.00010
14.739	31.538	.59910	-2.45150	.01100	-.00700	.00000	5.85960	.03740	-.01020	.00220	-.00020
14.741	46.575	.59980	-3.49040	.01400	-.00920	.00000	5.84790	.04480	-.01080	.00260	-.00030
14.736	61.537	.59920	-4.52810	.02380	-.01480	.00000	5.84020	.04460	-.01150	.00280	-.00030
	GRADIENT	.00000	.00000	.00000	.00000	.00000	.00000	.00000	.00000	.00000	.00000

CA20 747/1 02 SI CARRIER DATA (AGN130) (01 DEC 75)

REFERENCE DATA

SREF = 5500.0000 SQ.FT. XMRP = 1339.9000 IN.XC
LREF = 327.7800 IN. YMRP = .0000 IN.YC
BREF = 2348.0400 IN. ZMRP = 190.8000 IN.ZC
SCALE = .0300

PARAMETRIC DATA

ALPHAC =	4.000	BETAC =	.000
ELV-IB =	.000	ELV-OB =	3.000
ELEVON =	5.000	MACH =	.600
BETAO =	.000	PHI =	.000
DX =	10.000	DY =	.000

RUN NO. 661/ 0 RN/L = 3.30 GRADIENT INTERVAL = -1.00/ 4.00

ALPHAO	DZ	MACH	DX	DY	BETAO	PHI	ALPHAW	BETA	CY	CLN	CSL
10.416	-1.295	.59950	10.81230	-.00590	.00640	.00000	5.86600	.00120	-.00710	-.00070	.00050
10.413	1.696	.59980	10.60770	-.00370	.00510	.00000	5.86550	.00080	-.00720	-.00020	.00040
10.418	6.294	.59950	10.29140	-.00080	.00360	.00000	5.86130	.00010	-.00800	.00070	.00030
10.427	13.796	.59900	9.77720	-.00180	.00220	.00000	5.85460	.00730	-.00840	.00130	.00010
10.446	28.832	.59940	8.74400	.00980	-.00260	.00000	5.84380	-.00150	-.01080	.00250	-.00020
10.459	43.886	.59950	7.71030	.00770	-.00200	.00000	5.83270	.00640	-.01040	.00240	-.00030
10.460	48.115	.59900	7.41160	.01090	-.00390	.00000	5.83590	.00630	-.01050	.00250	-.00030
	GRADIENT	.00000	.00000	.00000	.00000	.00000	.00000	.00000	.00000	.00000	.00000

CA20 747/1 02 SI CARRIER DATA (AGN130) (01 DEC 75)

REFERENCE DATA

SREF = 5500.0000 SQ.FT. XMRP = 1339.9000 IN.XC
LREF = 327.7800 IN. YMRP = .0000 IN.YC
BREF = 2348.0400 IN. ZMRP = 190.8000 IN.ZC
SCALE = .0300

PARAMETRIC DATA

ALPHAC = 4.000 BETAC = .000
ELV-IB = .000 ELV-OB = 3.000
ELEVON = 5.000 MACH = .600
BETAO = .000 PHI = .000
DX = 10.000 DY = .000

RUN NO. 659/ 0 RN/L = 3.31 GRADIENT INTERVAL = -1.00/ 4.00

ALPHAO	DZ	MACH	DX	DY	BETAO	PHI	ALPHAW	BETA	CY	CLN	CSL
14.654	1.473	.59920	9.49420	.00240	-.00220	.00000	5.89650	-.01400	-.00470	-.00140	.00058
14.652	4.559	.59970	9.28000	-.00770	-.00200	.00000	5.89380	.00780	-.00710	.00010	.00030
14.654	9.090	.60080	8.97090	-.00540	-.00190	.00000	5.88430	-.00040	-.00800	.00090	.00010
14.654	16.527	.59930	8.45720	-.00110	-.00280	.00000	5.87540	-.00060	-.00830	.00130	.00010
14.662	31.535	.59920	7.42330	.01230	-.00780	.00000	5.86060	.00650	-.00930	.00210	-.00020
14.669	46.582	.60060	6.38510	.01520	-.00730	.00000	5.85040	-.00160	-.01020	.00250	-.00030
14.666	61.500	.59930	5.35300	.02020	-.01170	.00000	5.84130	.00630	-.01010	.00250	-.00030
	GRADIENT	.00000	.00000	.00000	.00000	.00000	.00000	.00000	.00000	.00000	.00000

CA20 747/1 02 SI CARRIER DATA (AGN131) (01 DEC 75)

REFERENCE DATA

SREF = 5500.0000 SQ.FT. XMRP = 1339.9000 IN.XC
LREF = 327.7800 IN. YMRP = .0000 IN.YC
BREF = 2348.0400 IN. ZMRP = 190.8000 IN.ZC
SCALE = .0300

PARAMETRIC DATA

ALPHAC = 4.000 BETAC = .000
ELV-IB = .000 ELV-OB = 3.000
ELEVON = 5.000 MACH = .600
BETAO = .000 PHI = .000
DX = 20.000 DY = .000

RUN NO. 665/ 0 RN/L = 3.29 GRADIENT INTERVAL = -1.00/ 4.00

ALPHAO	DZ	MACH	DX	DY	BETAO	PHI	ALPHAW	BETA	CY	CLN	CSL
10.344	-1.157	.60020	20.75990	-.01360	.01070	.00000	5.85580	.00810	-.00810	.00000	.00030
10.344	1.504	.60090	20.57800	-.01080	.00820	.00000	5.85790	.00760	-.00840	.00060	.00020
10.359	6.352	.60080	20.24040	-.01160	.00820	.00000	5.85700	.00670	-.00970	00160	.00000
10.371	13.612	.60090	19.74450	-.00940	.00660	.00000	5.84970	.00620	-.01020	.00220	-.00020
10.391	28.736	.59970	18.70630	-.00410	.00100	.00000	5.83920	.01320	-.01170	.00310	-.00050
10.408	43.809	.59970	17.66210	.00120	.00220	.00000	5.83580	.00580	-.01090	.00280	-.00050
10.408	48.295	.59950	17.34990	.00520	.00030	.00000	5.83690	.00580	-.01060	.00270	-.00050
	GRADIENT	.00000	.00000	.00000	.00000	.00000	.00000	.00000	.00000	.00000	.00000

182

CA20 747/1 02 S1 CARRIER DATA (AGN131) (01 DEC 75)

REFERENCE DATA

SREF = 5500.0000 SQ.FT. XMRP = 1339.9000 IN.XC
LREF = 327.7800 IN. YMRP = .0000 IN.YC
BREF = 2348.0400 IN. ZMRP = 190.8000 IN.ZC
SCALE = .0300

PARAMETRIC DATA

ALPHAC = 4.000 BETAC = .006
ELV-IB = .000 ELV-OB = 3.000
ELEVON = 5.000 MACH = .600
BETAO = .000 PHI = .000
DX = 20.000 DY = .000

RUN NO. 666/ 0 RN/L = 3.30 GRADIENT INTERVAL = -1.00/ 4.00

ALPHAO	DZ	MACH	DX	DY	BETAO	PHI	ALPHAW	BETA	CY	CLN	CSL
14.563	1.265	.60070	19.36720	-.00550	.00370	.00000	5.98270	-.00740	-.00690	-.00050	.00030
14.581	3.972	.59970	19.17960	-.01280	.00290	.00000	5.98100	.00760	-.00760	.00020	.00020
14.566	8.805	.60090	18.85080	-.01350	.00120	.00000	5.97500	.00680	-.00870	.00120	.00010
14.572	16.457	.60070	18.32510	-.01960	.00040	.00000	5.96880	.01380	-.00980	.00210	-.00010
14.587	31.737	.59980	17.27880	-.00450	-.00270	.00000	5.95150	.00560	-.01080	.00270	-.00040
14.590	46.430	.60030	16.26130	.00240	-.00380	.00000	5.94570	.01340	-.01080	.00280	-.00040
14.592	61.104	.60010	15.24460	.01090	-.00780	.00000	5.94000	.01330	-.01110	.00290	-.00050
	GRADIENT	-.00037	-.05931	-.00270	-.00030	.00000	-.00063	.00554	-.00026	.00026	-.00004

CA20 747/1 02 S1 CARRIER DATA (AGN132) (01 DEC 75)

REFERENCE DATA

SREF = 5500.0000 SQ.FT. XMRP = 1339.9000 IN.XC
LREF = 327.7800 IN. YMRP = .0000 IN.YC
BREF = 2348.0400 IN. ZMRP = 190.8000 IN.ZC
SCALE = .0300

PARAMETRIC DATA

ALPHAC = 8.000 BETAC = .006
ELV-IB = .000 ELV-OB = 3.000
ELEVON = 5.000 MACH = .600
BETAO = .000 PHI = .000
DX = .000 DY = .000

RUN NO. 655/ 0 RN/L = 3.29 GRADIENT INTERVAL = -1.00/ 4.00

ALPHAO	DZ	MACH	DX	DY	BETAO	PHI	ALPHAW	BETA	CY	CLN	CSL
10.325	-3.370	.60020	-.58580	-.01840	.00440	.00000	9.73250	.05010	-.01090	-.00060	-.00010
10.339	-.284	.59980	-1.00620	-.02020	.00540	.00000	9.73490	.04910	-.01080	.00040	-.00040
10.358	4.265	.59930	-1.62680	-.01390	.00340	.00000	9.73230	.04020	-.01220	.00160	-.00050
10.393	11.674	.59950	-2.64370	-.01290	.00270	.00000	9.72790	.03930	-.01270	.00260	-.00070
10.467	26.974	.60060	-4.76500	-.00550	-.00210	.00000	9.72060	.04650	-.01300	.00330	-.00100
10.499	41.940	.60090	-6.84130	-.00280	-.00150	.00000	9.71560	.03910	-.01230	.00310	-.00110
10.504	47.907	.59980	-7.67290	.00000	-.00430	.00000	9.71420	.04670	-.01240	.00320	-.00110
	GRADIENT	.00000	.00000	.00000	.00000	.00000	.00000	.00000	.00000	.00000	.00000

ORIGINAL PAGE IS OF POOR QUALITY

CA20 747/1 02 S1 CARRIER DATA (AGN132) (01 DEC 75)

REFERENCE DATA

SREF = 5500.0000 SQ.FT. XMRP = 1339.9000 IN.XC
LREF = 327.7800 IN. YMRP = .0000 IN.YC
BREF = 2348.0400 IN. ZMRP = 190.8000 IN.ZC
SCALE = .0300

PARAMETRIC DATA

ALPHAC = 8.000 BETAC = .000
ELV-IB = .000 ELV-OB = 3.000
ELEVON = 5.000 MACH = .600
BETAO = .000 PHI = .000
DX = .000 DY = .000

RUN NO. 654/ 0 RN/L = 3.27 GRADIENT INTERVAL = -1.00/ 4.00

ALPHAO	DZ	MACH	DX	DY	BETAO	PHI	ALPHAW	BETA	CY	CLN	CSL
14.639	-1.095	.59930	-1.94790	-.01490	.00090	.00000	9.77180	.04100	-.01140	-.00010	.00020
14.640	1.805	.59900	-2.34740	-.01540	.00040	.00000	9.77590	.04040	-.01170	.00070	.00000
14.651	6.322	.59930	-2.96170	-.01730	-.00080	.00000	9.76190	.04750	-.01210	.00150	.00000
14.669	13.867	.59920	-4.00010	-.01860	-.00120	.00000	9.75180	.03900	-.01300	.00250	-.00030
14.700	28.918	.59940	-6.07580	-.01170	-.00600	.00000	9.73820	.05370	-.01370	.00350	-.00080
14.717	43.759	.60060	-8.13400	.00140	-.00650	.00000	9.72610	.04610	-.01380	.00350	-.00100
14.720	58.717	.59920	-10.22410	.01690	-.01250	.00000	9.72190	.03880	-.01270	.00320	-.00110
	GRADIENT	.00000	.00000	.00000	.00000	.00000	.00000	.00000	.00000	.00000	.00000

CA20 747/1 02 S1 CARRIER DATA (AGN133) (01 DEC 75)

REFERENCE DATA

SREF = 5500.0000 SQ.FT. XMRP = 1339.9000 IN.XC
LREF = 327.7800 IN. YMRP = .0000 IN.YC
BREF = 2348.0400 IN. ZMRP = 190.8000 IN.ZC
SCALE = .0300

PARAMETRIC DATA

ALPHAC = 8.000 BETAC = .000
ELV-IB = .000 ELV-OB = 3.000
ELEVON = 5.000 MACH = .600
BETAO = .000 PHI = .000
DX = 10.000 DY = .000

RUN NO. 658/ 0 RN/L = 3.32 GRADIENT INTERVAL = -1.00/ 4.00

ALPHAO	DZ	MACH	DX	DY	BETAO	PHI	ALPHAW	BETA	CY	CLN	CSL
10.250	-3.341	.59930	9.46660	-.00230	.00660	.00000	9.73350	-.00380	-.00790	-.00100	.00070
10.261	-.279	.60070	9.04960	-.00670	.00710	.00000	9.73400	.00310	-.00880	.00000	.00050
10.285	4.305	.60080	8.41940	-.00380	.00540	.00000	9.73010	.00210	-.00950	.00100	.00040
10.320	11.768	.60090	7.39060	-.00170	.00420	.00000	9.72910	.00100	-.01120	.00230	.00030
10.383	26.778	.59960	5.31340	.00370	-.00080	.00000	9.72150	.00810	-.01170	.00300	.00020
10.431	41.918	.60030	3.20170	.01180	-.00050	.00000	9.71970	-.00690	-.01070	.00270	.00030
10.441	48.647	.60060	2.28430	.01190	-.00240	.00000	9.71860	.00070	-.01100	.00280	.00030
	GRADIENT	.00000	.00000	.00000	.00000	.00000	.00000	.00000	.00000	.00000	.00000

CA20 747/1 02 S1 CARRIER DATA (AGN133) (01 DEC 75)

REFERENCE DATA

SREF = 5500.0000 SQ.FT. XMRP = 1339.9000 IN.XC
LREF = 327.7800 IN. YMRP = .0000 IN.YC
BREF = 2348.0400 IN. ZMRP = 190.8000 IN.ZC
SCALE = .0300

PARAMETRIC DATA

ALPHAC = 8.000 BETAC = .000
ELV-IB = .000 ELV-OB = 3.000
ELEVON = 5.000 MACH = .600
BETAO = .000 PHI = .000
DX = 10.000 DY = .000

RUN NO. 660/ 0 RN/L = 3.29 GRADIENT INTERVAL = -1.00/ 4.00

ALPHAO	DZ	MACH	DX	DY	BETAO	PHI	ALPHAW	BETA	CY	CLN	CSL
14.520	-1.391	.60010	8.03730	.00340	.00250	.00000	9.76000	-.00500	-.00980	-.00010	-.00018
14.524	1.080	.59980	7.69910	.00410	.00150	.00000	9.75850	-.00550	-.01000	.00050	-.00010
14.540	6.153	.59910	7.00390	-.00180	.00050	.00000	9.75340	.00920	-.01060	.00140	-.00020
14.567	13.465	.59920	6.00060	-.00680	-.00040	.00000	9.74660	.01620	-.01170	.00220	-.00030
14.611	28.593	.59930	3.91600	.00730	-.00720	.00000	9.73550	-.00030	-.01300	.00350	-.00080
14.634	43.596	.59940	1.83370	.00150	-.00600	.00000	9.72810	.00760	-.01290	.00340	-.00100
14.648	58.440	.60020	-.23670	.01520	-.01150	.00000	9.72500	.00040	-.01180	.00300	-.00120
	GRADIENT	.00000	.00000	.00000	.00000	.00000	.00000	.00000	.00000	.00000	.00000

CA20 747/1 02 S1 CARRIER DATA (AGN134) (01 DEC 75)

REFERENCE DATA

SREF = 5500.0000 SQ.FT. XMRP = 1339.9000 IN.XC
LREF = 327.7800 IN. YMRP = .0000 IN.YC
BREF = 2348.0400 IN. ZMRP = 190.8000 IN.ZC
SCALE = .0300

PARAMETRIC DATA

ALPHAC = 8.000 BETAC = .000
ELV-IB = .000 ELV-OB = 3.000
ELEVON = 5.000 MACH = .600
BETAO = .000 PHI = .000
DX = 20.000 DY = .000

RUN NO. 668/ 0 RN/L = 3.28 GRADIENT INTERVAL = -1.00/ 4.00

ALPHAO	DZ	MACH	DX	DY	BETAO	PHI	ALPHAW	BETA	CY	CLN	CSL
10.184	-3.785	.59970	19.58200	-.01190	.01250	.00000	9.73010	.01060	-.00990	.00000	-.00010
10.194	.797	.60000	18.95340	-.01600	.01120	.00000	9.73130	.01700	-.01110	.00140	-.00030
10.227	8.220	.59910	17.92710	-.00760	.00800	.00000	9.72960	.00810	-.01290	.00270	-.00050
10.297	23.195	.60060	15.84870	-.00440	.00240	.00000	9.72530	.01510	-.01370	.00370	-.00080
10.347	38.211	.60080	13.75840	-.00420	.00070	.00000	9.72080	.02340	-.01240	.00300	.00020
10.366	49.399	.60060	12.19640	.00940	-.00190	.00000	9.72110	.00810	-.01200	.00300	.00040
	GRADIENT	.00000	.00000	.00000	.00000	.00000	.00000	.00000	.00000	.00000	.00000

CA20 747/1 02 S1 CARRIER DATA (AGN134) (01 DEC 75)

REFERENCE DATA

SREF = 5500.0000 SQ.FT. XMRP = 1339.9000 IN.XC
LREF = 327.7800 IN. YMRP = .0000 IN.YC
BREF = 2348.0400 IN. ZMRP = 190.8000 IN.ZC
SCALE = .0300

PARAMETRIC DATA

ALPHAC = 8.000 BETAC = .000
ELV-IB = .000 ELV-OB = 3.000
ELEVON = 5.000 MACH = .600
BETAO = .000 PHI = .000
DX = 20.000 DY = .000

RUN NO. 667/ 0 RN/L = 3.29 GRADIENT INTERVAL = -1.00/ 4.00

ALPHAO	DZ	MACH	DX	DY	BETAO	PHI	ALPHAW	BETA	CY	CLN	CSL
14.434	-1.978	.60080	18.06030	-.00450	.00860	.00000	9.75680	.00220	-.01020	.00030	.00000
14.439	1.123	.59910	17.63650	-.00300	.00720	.00000	9.75390	.00130	-.01120	.00120	-.00030
14.456	5.657	.60090	17.01440	-.00600	.00540	.00000	9.75090	.00810	-.01260	.00240	-.00040
14.482	13.159	.59930	15.98070	-.00680	.00360	.00000	9.74550	.00740	-.01370	.00320	-.00060
14.529	28.036	.59980	13.92490	-.00740	-.00290	.00000	9.73940	.01440	-.01480	.00410	-.00100
14.557	42.826	.60040	11.87180	-.00890	-.00280	.00000	9.73310	.01490	-.01350	.00360	-.00110
14.572	57.824	.60030	9.78330	.00220	-.00830	.00000	9.72650	.00760	-.01280	.00340	-.00110
	GRADIENT	.00000	.00000	.00000	.00000	.00000	.00000	.00000	.00000	.00000	.00000

CA20 747/1 02 S1 CARRIER DATA (AGN135) (01 DEC 75)

REFERENCE DATA

SREF = 5500.0000 SQ.FT. XMRP = 1339.9000 IN.XC
LREF = 327.7800 IN. YMRP = .0000 IN.YC
BREF = 2348.0400 IN. ZMRP = 190.8000 IN.ZC
SCALE = .0300

PARAMETRIC DATA

ALPHAC = 4.000 BETAC = -5.000
ELV-IB = .000 ELV-OB = 3.000
ELEVON = 5.000 MACH = .600
BETAO = .000 PHI = .000
DX = .000 DY = 10.000

RUN NO. 728/ 0 RN/L = 3.27 GRADIENT INTERVAL = -1.00/ 4.00

ALPHAO	DZ	MACH	DX	DY	BETAO	PHI	ALPHAW	BETA	CY	CLN	CSL
10.520	-1.686	.59940	.87430	11.02640	.03050	.00000	5.82670	-4.95860	.08500	-.02700	.02420
10.517	1.116	.60050	.68300	11.02080	.03090	.00000	5.82390	-4.95160	.08490	-.02610	.02360
10.515	5.425	.60030	.39060	11.02730	.02690	.00000	5.81750	-4.96100	.09310	-.02420	.02240
10.523	13.266	.60010	-.14640	11.04010	.01690	.00000	5.81350	-4.94970	.07710	-.01970	.02010
10.531	28.048	.59930	-1.15190	11.06910	.00140	.00000	5.80280	-4.96350	.05990	-.01310	.01640
10.541	43.286	.60080	-2.18960	11.08330	-.00620	.00000	5.79360	-4.96030	.07880	-.01650	.01540
	GRADIENT	.00000	.00000	.00000	.00000	.00000	.00000	.00000	.00000	.00000	.00000

PRECEDING PAGE BLANK NOT FILMED

CA20 747/1 02 S1 CARRIER DATA (AGN136) (01 DEC 75)

REFERENCE DATA

SREF =	5500.0000 SQ.FT.	XMRP =	1339.9000 IN.XC		
LREF =	327.7800 IN.	YMRP =	.0000 IN.YC		
BREF =	2348.0400 IN.	ZMRP =	190.8000 IN.ZC		
SCALE =	.0300				

PARAMETRIC DATA

ALPHAC =	4.000	BETAC =	-5.000
ELV-IB =	.000	ELV-OB =	3.000
ELEVON =	5.000	MACH =	.608
BETAO =	.000	PHI =	.000
DX =	10.000	DY =	10.000

RUN NO. 732/ 0 RN/L = 3.26 GRADIENT INTERVAL = -1.00/ 4.00

ALPHAO	DZ	MACH	DX	DY	BETAO	PHI	ALPHAW	BETA	CY	CLN	CSL
10.431	-2.314	.59980	10.86780	11.92090	.02560	.00000	5.85030	-5.00450	.09110	-.02830	.02260
10.429	1.200	.60050	10.62870	11.91570	.02550	.00000	5.84850	-4.99710	.09170	-.02790	.02230
10.436	5.569	.60040	10.32740	11.92110	.02320	.00000	5.84590	-5.00650	.08930	-.02600	.02170
10.442	12.949	.60060	9.82710	11.92880	.01650	.00000	5.83690	-5.00300	.08230	-.02130	.01980
10.461	28.270	.60060	8.77300	11.95600	.00030	.00000	5.83260	-5.00920	.07370	-.01440	.01620
10.477	43.283	.60010	7.73500	11.98800	-.00600	.00000	5.82690	-5.00680	.08030	-.01720	.01540
10.478	47.066	.59970	7.47070	11.97270	-.00720	.00000	5.82790	-5.01380	.08240	-.01800	.01530
	GRADIENT	.00000	.00000	.00000	.00000	.00000	.00000	.00000	.00000	.00000	.00000

CA20 747/1 02 S1 CARRIER DATA (AGN137) (01 DEC 75)

REFERENCE DATA

SREF =	5500.0000 SQ.FT.	XMRP =	1339.9000 IN.XC		
LREF =	327.7800 IN.	YMRP =	.0000 IN.YC		
BREF =	2348.0400 IN.	ZMRP =	190.8000 IN.ZC		
SCALE =	.0300				

PARAMETRIC DATA

ALPHAC =	4.000	BETAC =	.000
ELV-IB =	.000	ELV-OB =	3.000
ELEVON =	5.000	MACH =	.600
BETAO =	.000	PHI =	.000
DX =	.000	DY =	10.000

RUN NO. 727/ 0 RN/L = 3.35 GRADIENT INTERVAL = -1.00/ 4.00

ALPHAO	DZ	MACH	DX	DY	BETAO	PHI	ALPHAW	BETA	CY	CLN	CSL
10.539	-1.720	.59990	.88540	9.98370	.01890	.00000	5.83340	.03160	-.02020	-.00790	.00970
10.532	1.145	.59910	.68770	9.97640	.02070	.00000	5.83250	.02160	-.01870	-.00550	.00810
10.533	5.590	.60050	.38650	9.97520	.01990	.00000	5.82510	.01060	-.02000	-.00200	.00640
10.535	13.225	.60040	-.13250	9.98060	.01510	.00000	5.81720	-.00130	-.02310	.00250	.00430
10.542	28.323	.60040	-1.16330	9.99290	.00450	.00000	5.80900	.00080	-.02810	.00860	.00130
10.549	43.196	.60050	-2.17880	10.00810	-.00350	.00000	5.79920	-.00580	-.02280	.00730	.00040
	GRADIENT	.00000	.00000	.00000	.00000	.00000	.00000	.00000	.00000	.00000	.00000

MATERIAL FURNISHED TO BE ENTIRELY SATISFACTORY FOR ALL REPRODUCTION PURPOSES

CA20 747/1 02 SI CARRIER DATA (AGN138) (01 DEC 75)

REFERENCE DATA

SREF = 5500.0000 SQ.FT. XMRP = 1339.9000 IN.XC
LREF = 327.7800 IN. YMRP = .0000 IN.YC
BREF = 2348.0400 IN. ZMRP = 190.8000 IN.ZC
SCALE = .0300

PARAMETRIC DATA

ALPHAC = 4.000 BETAC = .000
ELV-IB = .000 ELV-OB = 3.000
ELEVON = 5.000 MACH = .600
BETAO = .000 PHI = .000
DX = 10.000 DY = 10.000

RUN NO. 731/ 0 RN/L = 3.29 GRADIENT INTERVAL = -1.00/ 4.00

ALPHAO	DZ	MACH	DX	DY	BETAO	PHI	ALPHAH	BETA	CY	CLN	CSL
10.438	-1.817	.60030	10.85750	9.96490	.01980	.00000	5.85620	.06980	-.01500	-.00780	.00796
10.439	1.309	.60060	10.63520	9.95920	.02020	.00000	5.85440	.06800	-.01400	-.00570	.00668
10.441	5.640	.60020	10.33640	9.95380	.01960	.00000	5.85330	.07270	-.01640	-.00250	.00520
10.446	13.088	.60080	9.83100	9.96040	.01540	.00000	5.84330	.06110	-.02050	.00170	.00370
10.464	28.151	.60020	8.79230	9.95980	.00380	.00000	5.83680	.07070	-.02630	.00790	.00110
10.475	43.272	.59990	7.75180	9.98720	-.00320	.00000	5.82780	.05640	-.02180	.00670	.00020
10.474	47.051	.59910	7.49000	9.99650	-.00500	.00000	5.82660	.05460	-.02050	.00810	.00010
	GRADIENT	.00000	.00000	.00000	.00000	.00000	.00000	.00000	.00000	.00000	.00000

CA20 747/1 02 SI CARRIER DATA (AGN139) (01 DEC 75)

REFERENCE DATA

SREF = 5500.0000 SQ.FT. XMRP = 1339.9000 IN.XC
LREF = 327.7800 IN. YMRP = .0000 IN.YC
BREF = 2348.0400 IN. ZMRP = 190.8000 IN.ZC
SCALE = .0300

PARAMETRIC DATA

ALPHAC = 4.000 BETAC = 5.000
ELV-IB = .000 ELV-OB = 3.000
ELEVON = 5.000 MACH = .600
BETAO = .000 PHI = .000
DX = .000 DY = 10.000

RUN NO. 729/ 0 RN/L = 3.25 GRADIENT INTERVAL = -1.00/ 4.00

ALPHAO	DZ	MACH	DX	DY	BETAO	PHI	ALPHAH	BETA	CY	CLN	CSL
10.550	-1.816	.60090	.88480	8.78140	.04000	.00000	5.83180	5.12510	-.11570	.00740	-.00490
10.536	1.291	.59920	.67080	8.78380	.03380	.00000	5.82790	5.11980	-.11720	.01290	-.00690
10.535	5.717	.60090	.37070	8.78850	.02850	.00000	5.82240	5.10560	-.12230	.01980	-.00900
10.534	13.051	.59980	-.13060	8.79650	.02100	.00000	5.81730	5.09230	-.12660	.02580	-.01120
10.539	28.194	.59940	-1.16040	8.80860	.00820	.00000	5.80400	5.09540	-.12860	.03060	-.01360
10.541	43.343	.60000	-2.19520	8.81680	.00080	.00000	5.79690	5.10330	-.12510	.03040	-.01450
	GRADIENT	.00000	.00000	.00000	.00000	.00000	.00000	.00000	.00000	.00000	.00000

CA20 747/1 02 S1 CARRIER DATA (AGN140) (01 DEC 75)

REFERENCE DATA

SREF = 5500.0000 SQ.FT. XMRP = 1339.9000 IN.XC
LREF = 327.7000 IN. YMRP = .0000 IN.YC
BREF = 2340.0400 IN. ZMRP = 190.0000 IN.ZC
SCALE = .0300

PARAMETRIC DATA

ALPHAC =	4.000	BETAC =	5.000
ELV-IB =	.000	ELV-OB =	3.000
ELEVON =	5.000	MACH =	.600
BETAO =	.000	PHI =	.000
DX =	10.000	DY =	10.000

RUN NO. 733/ 0 RN/L = 3.26 GRADIENT INTERVAL = -1.00/ 4.00

ALPHAO	DZ	MACH	DX	DY	BETAO	PHI	ALPHAW	BETA	CY	CLN	CSL
10.480	-1.821	.60040	10.83520	7.94920	.03540	.00000	5.85460	5.01710	-.10790	.00740	-.00670
10.481	1.631	.60080	10.62320	7.94600	.03110	.00000	5.85280	5.01310	-.10890	.01160	-.00800
10.480	5.640	.60050	10.32500	7.95330	.02550	.00000	5.84960	4.99880	-.11560	.01860	-.00980
10.481	13.091	.60000	9.01010	7.95720	.01940	.00000	5.84150	4.99280	-.12220	.02500	-.01150
10.480	23.314	.60080	8.77030	7.95920	.00680	.00000	5.83440	4.99560	-.12610	.03020	-.01380
10.478	43.187	.60050	7.74450	7.97620	.00060	.00000	5.82840	4.99600	-.12270	.02970	-.01460
10.479	47.015	.60040	7.47410	7.97680	-.00120	.00000	5.83180	4.99630	-.12140	.02940	-.01460
	GRADIENT	.00000	.00000	.00000	.00000	.00000	.00000	.00000	.00000	.00000	.00000

CA20 747/1 01 S1 CARRIER DATA (AGN141) (01 DEC 75)

REFERENCE DATA

SREF = 5500.0000 SQ.FT. XMRP = 1339.9000 IN.XC
LREF = 327.7000 IN. YMRP = .0000 IN.YC
BREF = 2340.0400 IN. ZMRP = 190.0000 IN.ZC
SCALE = .0300

PARAMETRIC DATA

ALPHAC =	4.000	BETAC =	.000
ELV-IB =	10.000	ELV-OB =	13.000
ELEVON =	5.000	MACH =	.600
BETAO =	.000	PHI =	.000
DX =	.000	DY =	.000

RUN NO. 707/ 0 RN/L = 3.25 GRADIENT INTERVAL = .00/ 12.00

ALPHAO	DZ	MACH	DX	DY	BETAO	PHI	ALPHAW	BETA	CY	CLN	CSL
10.523	-1.884	.60080	.87920	-.01420	.01180	.00000	5.83190	.00050	-.00970	.00060	.00000
10.504	.978	.59910	.68440	-.01200	.01100	.00000	5.83240	.00020	-.00980	.00090	-.00020
10.501	5.523	.59930	.37680	-.01360	.01060	.00000	5.82540	.00740	-.01010	.00150	-.00030
10.504	13.055	.59950	-.13550	-.00840	.00810	.00000	5.81690	-.00060	-.01020	.00190	-.00030
10.516	28.002	.59950	-1.15670	-.00310	.00260	.00000	5.80490	.00670	-.01080	.00240	-.00060
10.523	42.970	.59980	-2.18400	.00060	.00280	.00000	5.79720	-.00120	-.01090	.00260	-.00070
	GRADIENT	.00004	-.06768	-.00035	-.00009	.00000	-.00154	.00158	-.00007	.00013	-.00002

CA20 747/1 01 SI CARRIER DATA (AGN141) (01 DEC 75)

REFERENCE DATA

SREF = 5500.0000 SQ.FT. XMRP = 1339.9000 IN.XC
LREF = 327.7800 IN. YMRP = .0000 IN.YC
BREF = 2348.0400 IN. ZMRP = 190.8000 IN.ZC
SCALE = .0300

PARAMETRIC DATA

ALPHAC = 4.000 BETAC = .000
ELV-IB = 10.000 ELV-OB = 13.000
ELEVON = 5.000 MACH = .600
BETAO = .000 PHI = .000
DX = .000 DY = .000

RUN NO. 708/ 0 RN/L = 3.19 GRADIENT INTERVAL = .00/ 12.00

ALPHAO	DZ	MACH	DX	DY	BETAO	PHI	ALPHAW	BETA	CY	CLN	CSL
14.811	.024	.60020	-.26990	-.01340	.00790	.00000	5.86260	-.00700	-.00850	-.00020	.00040
14.784	3.045	.59940	-.47840	-.01140	.00760	.00000	5.85980	-.00050	-.01020	.00110	.00000
14.771	7.498	.59900	-.78610	-.01170	.00750	.00000	5.85370	-.00070	-.01060	.00160	-.00020
14.765	14.984	.60030	-1.29790	-.00650	.00470	.00000	5.83950	-.00790	-.00930	.00120	-.00020
14.762	29.993	.59970	-2.32360	.00060	.00060	.00000	5.81920	-.00140	-.01140	.00270	-.00070
14.773	45.117	.60060	-3.36230	.00450	-.00040	.00000	5.80590	-.00140	-.01150	.00270	-.00070
	GRADIENT	-.00016	-.06907	.00021	-.00005	.00000	-.00120	.00078	-.00027	.00023	-.00008

CA20 747/1 01 SI CARRIER DATA (AGN142) (01 DEC 75)

REFERENCE DATA

SREF = 5500.0000 SQ.FT. XMRP = 1339.9000 IN.XC
LREF = 327.7800 IN. YMRP = .0000 IN.YC
BREF = 2348.0400 IN. ZMRP = 190.8000 IN.ZC
SCALE = .0300

PARAMETRIC DATA

ALPHAC = 4.000 BETAC = .000
ELV-IB = -10.000 ELV-OB = -7.000
ELEVON = 5.000 MACH = .600
BETAO = .000 PHI = .000
DX = .000 DY = .000

RUN NO. 709/ 0 RN/L = 3.26 GRADIENT INTERVAL = .00/ 12.00

ALPHAO	DZ	MACH	DX	DY	BETAO	PHI	ALPHAW	BETA	CY	CLN	CSL
10.510	-2.321	.59970	.91020	-.01830	.01330	.00000	5.87430	-.00070	-.01160	.00130	-.00010
10.492	.765	.59940	.70150	-.01330	.01170	.00000	5.87190	-.00110	-.01140	.00180	-.00020
10.488	5.227	.60050	.40050	-.01330	.01100	.00000	5.86680	-.00130	-.01180	.00240	-.00040
10.491	12.822	.60020	-.11430	-.01030	.00980	.00000	5.85660	-.00190	-.01180	.00280	-.00050
10.501	27.760	.60030	-1.13010	-.00340	.00300	.00000	5.84560	.00540	-.01260	.00330	-.00020
10.504	42.754	.59920	-2.15880	-.00220	.00320	.00000	5.84080	.00530	-.01240	.00340	-.00030
	GRADIENT	.00025	-.06746	.00000	-.00016	.00000	-.00114	-.00011	-.00009	.00013	-.00004

RUN NO. 710/ 0 RN/L = 3.22 GRADIENT INTERVAL = .00/ 12.00

ALPHAO	DZ	MACH	DX	DY	BETAO	PHI	ALPHAW	BETA	CY	CLN	CSL
14.880	.715	.59990	-.33240	-.01950	.00830	.00000	5.90190	-.00850	-.01080	.00090	.00020
14.855	3.826	.60000	-.54650	-.01550	.00790	.00000	5.89770	-.00950	-.01200	.00200	.00000
14.843	8.214	.59990	-.84750	-.01270	.00700	.00000	5.89190	-.00240	-.01310	.00280	-.00030
14.833	15.830	.59920	-1.36850	-.00680	.00540	.00300	5.87920	-.00950	-.01170	.00240	-.00030
14.832	30.666	.59990	-2.37840	.00030	.00040	.00000	5.86080	.00500	-.01310	.00360	-.00060
14.845	45.837	.60070	-3.41720	.00350	.00010	.00000	5.84980	-.00250	-.01280	.00350	-.00080
	GRADIENT	-.00000	-.06869	.00089	-.00018	.00000	-.00133	.00087	-.00030	.00025	-.00007

CA20 747/1 01 S1 CARRIER DATA (AGN143) (01 DEC 75)

REFERENCE DATA

SREF =	5500.0000 SQ.FT.	XMRP =	1339.9000 IN.XC		
LREF =	327.7800 IN.	YMRP =	.0000 IN.YC		
BREF =	2348.0400 IN.	ZMRP =	190.8000 IN.ZC		
SCALE =	.0300				

PARAMETRIC DATA

ALPHAC =	4.000	BETAC =	.000
RUD-U =	15.000	RUD-L =	15.000
ELEVON =	5.000	AILRON =	.000
BETAO =	.000	PHI =	.000
DX =	.000	DY =	.000

RUN NO. 711/ 0 RN/L = 3.26 GRADIENT INTERVAL = .00/ 12.00

ALPHAO	DZ	MACH	DX	DY	BETAO	PHI	ALPHAH	BETA	CY	CLN	CSL
10.504	-2.028	.60040	.90180	-.00790	.00910	.00000	5.83170	.02080	.02850	-.02180	.00210
10.485	.931	.60010	.70250	-.00660	.00820	.00000	5.83280	.02910	.03110	-.02240	.00210
10.480	5.560	.59930	.38950	-.00470	.00730	.00000	5.82470	.02230	.03380	-.02340	.00210
10.486	12.957	.60060	-.11140	-.00170	.00580	.00000	5.81620	.02310	.03550	-.02410	.00200
10.495	27.883	.59980	-1.12660	-.00090	.00160	.00000	5.80430	.03860	.03630	-.02420	.00170
10.513	42.996	.60040	-2.16480	.00170	.00120	.00000	5.79700	.03140	.03740	-.02470	.00180
	GRADIENT	-.00017	-.06762	.00041	-.00019	.00000	-.00175	-.00147	.00058	-.00022	.00000

RUN NO. 712/ 0 RN/L = 3.23 GRADIENT INTERVAL = .00/ 12.00

ALPHAO	DZ	MACH	DX	DY	BETAO	PHI	ALPHAH	BETA	CY	CLN	CSL
14.850	.267	.59970	-.28590	-.00380	.00380	.00000	5.86580	.01490	.03380	-.02430	.00290
14.835	3.331	.60060	-.49550	-.00180	.00300	.00000	5.86000	.02250	.03420	-.02400	.00270
14.823	7.773	.59990	-.80040	-.00110	.00300	.00000	5.85040	.02240	.03410	-.02380	.00260
14.816	15.438	.60080	-1.32290	.00080	.00180	.00000	5.83870	.02460	.03870	-.02600	.00260
14.812	30.319	.60000	-2.33750	.00670	-.00120	.00000	5.82090	.02360	.03710	-.02470	.00200
14.814	45.332	.60030	-3.36420	.00880	-.00280	.00000	5.80920	.03150	.03740	-.02480	.00200
	GRADIENT	.00001	-.06850	.00034	-.00010	.00000	-.00206	.00093	.00004	.00007	-.00004

CA20 747/1 02 SI CARRIER DATA (AGN144) (01 DEC 75)

REFERENCE DATA

SREF = 5500.0000 SQ.FT. XMRP = 1339.9000 IN.XC
LREF = 327.7800 IN. YMRP = .0000 IN.YC
BREF = 2348.0400 IN. ZMRP = 190.8000 IN.ZC
SCALE = .0300

PARAMETRIC DATA

ALPHAC =	4.000	BETAC =	.000
RUD-U =	15.000	RUD-L =	15.000
ELEVON =	5.000	AILRON =	.000
BETAO =	.000	PHI =	.000
DX =	.000	DY =	.000

RUN NO. 725/ 0 RN/L = 3.35 GRADIENT INTERVAL = -1.00/ 4.00

ALPHAO	DZ	MACH	DX	DY	BETAO	PHI	ALPHAH	BETA	CY	CLN	CSL
10.493	-2.198	.59920	.86940	-.02120	.00900	.00000	5.83560	.04360	.02750	-.02110	.00200
10.490	.873	.60080	.65950	-.01790	.00720	.00000	5.83230	.04430	.03020	-.02170	.00190
10.498	5.397	.60040	.34600	-.01580	.00630	.00000	5.82620	.04540	.03320	-.02290	.00200
10.503	12.983	.60040	-.17060	-.01280	.00430	.00000	5.82090	.04640	.03560	-.02400	.00200
10.527	28.053	.60080	-1.20520	-.00340	-.00140	.00000	5.81010	.05480	.03740	-.02460	.00180
10.533	42.969	.59970	-2.22510	-.00150	-.00120	.00000	5.80140	.05530	.03890	-.02530	.00190
	GRADIENT	.00000	.00000	.00000	.00000	.00000	.00000	.00000	.00000	.00000	.00000

CA20 747/1 01 SI CARRIER DATA (AGN145) (01 DEC 75)

REFERENCE DATA

SREF = 5500.0000 SQ.FT. XMRP = 1339.9000 IN.XC
LREF = 327.7800 IN. YMRP = .0000 IN.YC
BREF = 2348.0400 IN. ZMRP = 190.8000 IN.ZC
SCALE = .0300

PARAMETRIC DATA

ALPHAC =	4.000	BETAC =	.000
ELV-IB =	.000	ELV-OB =	3.000
ELEVON =	.000	MACH =	.600
BETAO =	.000	PHI =	.000
DX =	.000	DY =	.000

RUN NO. 719/ 0 RN/L = 3.37 GRADIENT INTERVAL = .00/ 12.00

ALPHAO	DZ	MACH	DX	DY	BETAO	PHI	ALPHAH	BETA	CY	CLN	CSL
10.508	-2.315	.59950	.86160	-.02240	.01230	.00000	5.83900	.01600	-.00910	.00050	.00020
10.485	.910	.60010	.64410	-.01560	.01010	.00000	5.83720	.00780	-.00890	.00090	.00010
10.479	5.273	.60050	.34780	-.01470	.00900	.00000	5.83290	.00740	-.00950	.00140	-.00010
10.493	12.814	.59990	-.17030	-.01270	.00720	.00000	5.82510	.00680	-.01010	.00220	-.00030
10.514	27.985	.59990	-1.20940	-.00700	.00240	.00000	5.81500	.01410	-.01070	.00270	-.00060
10.516	42.855	.60060	-2.22930	-.00590	.00230	.00000	5.81080	.01410	-.01050	.00260	-.00070
	GRADIENT	.00009	-.06790	.00021	-.00025	.00000	-.00099	-.00011	-.00014	.00011	-.00005

RUN NO. 720/ 0 RN/L = 3.36 GRADIENT INTERVAL = .00/ 12.00

ALPHAO	DZ	MACH	DX	DY	BETAO	PHI	ALPHAH	BETA	CY	CLN	CSL
14.834	.261	.59990	-.35440	-.01240	.00660	.00000	5.87110	.00780	-.00910	.00050	.00020
14.809	3.316	.60070	-.56180	-.01030	.00610	.00000	5.86790	.00710	-.00990	.00130	.00000
14.796	7.681	.60050	-.86160	-.00870	.00450	.00000	5.85940	.01500	-.00940	.00130	-.00010
14.787	15.322	.60020	-1.38380	-.00440	.00320	.00000	5.84680	.00720	-.00940	.00150	-.00020
14.785	30.199	.60020	-2.40060	.00200	.00030	.00000	5.83010	.01380	-.01100	.00280	-.00060
14.785	45.162	.59980	-3.43280	.00150	-.00110	.00000	5.82200	.01400	-.01050	.00260	-.00050
	GRADIENT	.00009	-.06838	.00049	-.00028	.00000	-.00160	.00103	-.00003	.00010	-.00004

CA20 747/1 01 S1 CARRIER DATA (AGNI48) (01 DEC 75)

REFERENCE DATA

SREF =	5500.0000 SQ.FT.	XMRP =	1339.9000 IN.XC		
LREF =	327.7800 IN.	YMRP =	.0000 IN.YC		
BREF =	2348.0400 IN.	ZMRP =	190.8000 IN.ZC		
SCALE =	.0300				

PARAMETRIC DATA

ALPHAC =	4.000	BETAC =	.000
ELV-IB =	.000	ELV-OB =	3.000
ELEVON =	10.000	MACH =	.600
BETAO =	.000	PHI =	.000
DX =	.000	DY =	.000

RUN NO. 714/ 0 RN/L = 3.32 GRADIENT INTERVAL = .00/ 12.00

ALPHAO	DZ	MACH	DX	DY	BETAO	PHI	ALPHAH	BETA	CY	CLN	CSL
10.553	-1.753	.60000	.91190	-.01320	.01160	.00000	5.84170	.00730	-.01060	.00100	-.00028
10.538	1.319	.59950	.70500	-.01080	.01060	.00000	5.84200	-.00080	-.01070	.00140	-.00038
10.533	5.976	.59920	.39120	-.00710	.00880	.00000	5.83500	-.00140	-.01130	.00220	-.00058
10.546	13.370	.59940	-.11340	-.00420	.00710	.00000	5.82500	-.00930	-.01130	.00250	-.00060
10.559	28.434	.59990	-1.13730	-.00290	.00230	.00000	5.81090	.01370	-.01110	.00270	-.00090
10.566	43.399	.60040	-2.16030	.00340	.00160	.00000	5.80210	-.00170	-.01090	.00270	-.00090
	GRADIENT	-.00006	-.06738	.00079	-.00039	.00000	-.00150	-.00013	-.00013	.00017	-.00004

RUN NO. 715/ 0 RN/L = 3.26 GRADIENT INTERVAL = .00/ 12.00

ALPHAO	DZ	MACH	DX	DY	BETAO	PHI	ALPHAH	BETA	CY	CLN	CSL
14.836	.243	.60050	-.21980	.00160	.00640	.00000	5.87510	-.00800	-.00900	.00020	.00028
14.814	3.412	.59960	-.43820	.00680	.00600	.00000	5.87140	-.00830	-.00930	.00070	-.00018
14.803	7.911	.60000	-.74500	.00770	.00520	.00000	5.86270	.00650	-.01060	.00150	-.00020
14.796	15.416	.60060	-1.25670	.01250	.00400	.00000	5.84880	-.00140	-.01090	.00210	-.00050
14.790	30.262	.60080	-2.27070	.01570	-.00090	.00000	5.82830	-.00970	-.01170	.00290	-.00070
14.791	45.331	.59950	-3.30390	.01700	-.00250	.00000	5.81480	-.00190	-.01130	.00290	-.00060
	GRADIENT	-.00005	-.06847	.00076	-.00016	.00000	-.00164	.00198	-.00021	.00017	-.00005

ORIGINAL PAGE IS
OF POOR QUALITY

CA20 747/1 01 S1 CARRIER DATA (AGN147) (01 DEC 75)

REFERENCE DATA

SREF = 5500.0000 SQ.FT. XMRP = 1339.9000 IN.XC
LREF = 327.7800 IN. YMRP = .0000 IN.YC
BREF = 2348.0400 IN. ZMRP = 190.8000 IN.ZC
SCALE = .0300

PARAMETRIC DATA

ALPHAC = 4.000 BETAC = .000
ELV-IB = .000 ELV-OB = 3.000
ELEVON = 10.000 MACH = .300
BETAO = .000 PHI = .000
DX = .000 DY = .000

RUN NO. 717/ 0 RN/L = 1.89 GRADIENT INTERVAL = .00/ 12.00

ALPHAO	DZ	MACH	DX	DY	BETAO	PHI	ALPHAH	BETA	CY	CLN	CSL
10.141	-2.619	.29950	.81180	.00220	.00360	.00000	5.83780	-.01830	-.01370	.00100	.00008
10.136	.296	.29970	.61310	.00380	.00280	.00000	5.83750	-.01850	-.01420	.00150	-.00010
10.135	4.872	.30050	.30110	.00390	.00280	.00000	5.83370	-.01870	-.01460	.00250	-.00040
10.138	12.202	.29950	-.20310	.00500	.00180	.00000	5.82540	-.01890	-.01470	.00320	-.00050
10.139	26.995	.29920	-1.21700	.00550	.00010	.00000	5.81450	-.01120	-.01520	.00350	-.00070
10.142	42.221	.30030	-2.26320	.00710	-.00030	.00000	5.80700	-.01130	-.01560	.00370	-.00090
	GRADIENT	.00017	-.06820	.00002	-.00004	.00000	-.00083	-.00004	-.00009	.00022	-.00007

CA20 747/1 01 S1 CARRIER DATA (AGN148) (01 DEC 75)

REFERENCE DATA

SREF = 5500.0000 SQ.FT. XMRP = 1339.9000 IN.XC
LREF = 327.7800 IN. YMRP = .0000 IN.YC
BREF = 2348.0400 IN. ZMRP = 190.8000 IN.ZC
SCALE = .0300

PARAMETRIC DATA

ALPHAC = 4.000 BETAC = .000
ELV-IB = .000 ELV-OB = 3.000
ELEVON = 10.000 MACH = .700
BETAO = .000 PHI = .000
DX = .000 DY = .000

RUN NO. 716/ 0 RN/L = 3.54 GRADIENT INTERVAL = .00/ 12.00

ALPHAO	DZ	MACH	DX	DY	BETAO	PHI	ALPHAH	BETA	CY	CLN	CSL
10.694	-1.671	.69950	1.00630	-.00650	.00800	.00000	5.84060	.00160	-.00790	.00020	.00028
10.676	1.362	.69940	.80310	-.00020	.00550	.00000	5.84050	-.00650	-.00760	.00060	-.00019
10.669	5.761	.69990	.50890	.00080	.00430	.00000	5.83300	.00040	-.00820	.00130	-.00020
10.672	13.248	.69970	.00210	.00210	.00320	.00000	5.82130	-.00760	-.00840	.00170	-.00040
10.678	28.136	.69950	-1.01140	.00480	-.00020	.00000	5.80840	-.01510	-.00760	.00170	-.00050
10.687	43.386	.70020	-2.04590	.00670	-.00150	.00000	5.79430	-.00790	-.00870	.00210	-.00050
	GRADIENT	.00011	-.06688	.00023	-.00027	.00000	-.00170	.00157	-.00014	.00016	-.00002

CA20 747/1 01 SI CARRIER DATA (AGN149) (01 DEC 75)

REFERENCE DATA

SREF =	5500.0000 SQ.FT.	XMRP =	1339.9000 IN.XC		
LREF =	327.7800 IN.	YMRP =	.0000 IN.YC		
BREF =	2348.0400 IN.	ZMRP =	180.8000 IN.ZC		
SCALE =	.0300				

PARAMETRIC DATA

ALPHAC =	4.000	BETAC =	.000
RUD-U =	.000	RUD-L =	.000
ELEVON =	5.000	AILRON =	-18.000
BETAO =	.000	PHI =	.000
DX =	.000	DY =	.000

RUN NO. 722/ 0 RN/L = 3.33 GRADIENT INTERVAL = .00/ 12.00

ALPHAO	DZ	MACH	DX	DY	BETAO	PHI	ALPHAH	BETA	CY	CLN	CSL
10.503	-2.010	.59960	.69090	.25100	-.08650	.00000	5.85820	.01850	-.01760	-.00220	.00490
10.487	1.016	.60000	.68580	.25740	-.09050	.00000	5.85620	.01730	-.01800	-.00090	.00410
10.482	5.470	.60000	.38360	.26120	-.09370	.00000	5.85130	.01560	-.02000	.00090	.00340
10.481	12.919	.59940	-.12140	.26800	-.09810	.00000	5.84070	.00120	-.03020	.00820	.00160
10.494	28.155	.59980	-1.16420	.27880	-.10760	.00000	5.82880	.01190	-.03440	.01330	-.00080
10.501	42.900	.60060	-2.17720	.28710	-.11030	.00000	5.82100	.00890	-.02250	.00820	-.00090
	GRADIENT	.00000	-.06809	.00085	-.00072	.00000	-.00110	-.00038	-.00045	.00040	-.00016

RUN NO. 723/ 0 RN/L = 3.28 GRADIENT INTERVAL = .00/ 12.00

ALPHAO	DZ	MACH	DX	DY	BETAO	PHI	ALPHAH	BETA	CY	CLN	CSL
14.792	.127	.60030	-.27480	.24900	-.09720	.00000	5.88580	.01450	-.00930	-.00670	.00460
14.780	2.855	.59940	-.46850	.25950	-.09840	.00000	5.88230	.01270	-.01220	-.00470	.00460
14.769	7.573	.59960	-.79580	.26120	-.10000	.00000	5.87690	.02520	-.01660	-.00140	.00390
14.755	15.007	.60020	-1.29790	.26930	-.10590	.00000	5.86080	.01260	-.02380	.00410	.00310
14.753	30.023	.60080	-2.32950	.28280	-.11230	.00000	5.84740	.00450	-.03500	.01290	.00020
14.748	45.056	.60010	-3.35330	.28550	-.11380	.00000	5.83310	.00650	-.02810	.01080	-.00080
	GRADIENT	-.00008	-.06991	.00150	-.00037	.00000	-.00119	.00157	-.00098	.00071	-.00010

CA20 01 S2 S3 ORBITER DATA (BGN001) (20 JAN 75)

REFERENCE DATA

SREF = 2690.0000 SQ.FT. XMRP = 1109.0000 IN.XO
LREF = 474.8100 IN. YMRP = .0000 IN.YO
BREF = 936.6800 IN. ZMRP = 375.0000 IN.ZO
SCALE = .0300

PARAMETRIC DATA

ELEVON = 5.000 AILRON = .000
BETAO = -5.000 PHI = .000

RUN NO. 576/ 0 RN/L = 1.91 GRADIENT INTERVAL = .00/ 12.00

MACH	ALPHAO	BETAO	PHI	Q(PSF)	CL	CD	CLM	CY	CLN	CSL
.289	4.081	-5.07970	.00000	125.22060	.25280	.03770	-.02030	.06460	.01620	-.00640
.289	6.115	-5.06650	.00000	125.22070	.34710	.04850	-.01550	.06700	.01570	-.00470
.289	8.152	-5.04550	.00000	125.07500	.44490	.06240	-.01240	.06650	.01570	-.00260
.289	10.203	-5.01810	.00000	125.36630	.54460	.08170	-.00820	.06470	.01590	.00020
.289	12.243	-4.98370	.00000	125.07460	.64230	.10590	-.00360	.06370	.01520	.00320
.300	14.294	-4.94400	.00000	125.80350	.74160	.13930	.00230	.06180	.01540	.00440
.300	16.335	-4.89880	.00000	125.94970	.84420	.18080	.00890	.06080	.01550	.00540
.289	17.236	-4.87480	.00000	125.07500	.89140	.20240	.01030	.05970	.01480	.00660
	GRADIENT	.01009	.00000	.01436	.04770	.00715	.00192	-.00001	-.00004	.00107

RUN NO. 577/ 0 RN/L = 2.81 GRADIENT INTERVAL = .00/ 12.00

MACH	ALPHAO	BETAO	PHI	Q(PSF)	CL	CD	CLM	CY	CLN	CSL
.481	4.165	-5.21290	.00000	293.67830	.26470	.03910	-.02370	.07060	.01620	-.00660
.480	6.247	-5.19580	.00000	293.13970	.36030	.05060	-.01640	.07140	.01540	-.00470
.480	8.336	-5.17300	.00000	292.86970	.46480	.06490	-.01490	.07130	.01490	-.00230
.480	10.417	-5.14310	.00000	292.46310	.57160	.08670	-.01170	.06890	.01530	.00100
.480	12.496	-5.10610	.00000	292.59760	.67380	.11680	-.00400	.06800	.01440	.00370
.479	14.585	-5.06340	.00000	292.05640	.77650	.15580	.00530	.06530	.01490	.00510
.481	16.675	-5.01210	.00000	293.54200	.88120	.22000	.00930	.06820	.01300	.00060
.479	17.643	-4.98530	.00000	292.19150	.92420	.25130	.01040	.06590	.01370	.00070
	GRADIENT	.01117	.00000	-.18827	.04933	.00756	.00180	-.00025	-.00015	.00121

CA20 01 S2 S3 ORBITER DATA (BGN002) (20 JAN 75)

REFERENCE DATA

SREF = 2690.0000 SQ.FT. XMRP = 1109.0000 IN.XO
LREF = 474.8100 IN. YMRP = .0000 IN.YO
BREF = 936.6800 IN. ZMRP = 375.0000 IN.ZO
SCALE = .0300

PARAMETRIC DATA

ELEVON = 5.000 AILRON = .000
BETAO = .000 PHI = .000

RUN NO. 575/ 0 RN/L = 1.89 GRADIENT INTERVAL = .00/ 12.00

MACH	ALPHAO	BETAO	PHI	Q(PSF)	CL	CD	CLN	CY	CLN	CSL
.299	4.060	-.00670	.00000	125.51340	.24410	.04170	-.01730	.00580	.00090	-.00260
.300	6.109	-.00680	.00000	125.85090	.34020	.05060	-.01350	.00540	.00120	-.00250
.300	8.127	-.00670	.00000	125.80530	.43750	.06330	-.01090	.00590	.00100	-.00290
.299	10.162	-.00640	.00000	125.36760	.53730	.08160	-.00790	.00580	.00110	-.00300
.301	12.188	-.00620	.00000	126.38780	.63400	.10580	-.00010	.00500	.00150	-.00270
.299	14.240	-.00540	.00000	125.22150	.73610	.13850	.00620	.00450	.00130	-.00240
.299	16.274	-.00470	.00000	125.51330	.84260	.17990	.00930	.00290	.00170	-.00160
.300	17.062	-.00450	.00000	125.65910	.88460	.19910	.01070	.00270	.00170	-.00160
	GRADIENT	.00005	.00000	-.02650	.04806	.00651	.00152	.00002	.00002	-.00007

CA20 01 S2 S3 ORBITER DATA (BGN003) (20 JAN 75)

REFERENCE DATA

SREF = 2690.0000 SQ.FT. XMRP = 1109.0000 IN.XO
LREF = 474.8100 IN. YMRP = .0000 IN.YO
BREF = 936.6800 IN. ZMRP = 375.0000 IN.ZO
SCALE = .0300

PARAMETRIC DATA

ELEVON = 5.000 AILRON = .000
BETAO = .000 PHI = .000

RUN NO. 572/ 0 RN/L = 3.28 GRADIENT INTERVAL = .00/ 12.00

MACH	ALPHAO	BETAO	PHI	Q(PSF)	CL	CD	CLN	CY	CLN	CSL
.601	-.009	.00220	.00000	421.01010	.08710	.03000	-.04020	.00090	-.00080	-.00120
.599	4.257	.00380	.00000	419.65190	.27800	.04710	-.01320	-.00140	.00020	-.00140
.600	6.613	.00410	.00000	421.01800	.39460	.06890	-.01180	-.00160	.00030	-.00150
.599	8.242	.00340	.00000	419.77250	.32570	.05210	-.01050	-.00140	.00030	-.00160
.600	6.343	.00370	.00000	420.39910	.38280	.05920	-.00950	-.00170	.00050	-.00170
.601	8.514	.00340	.00000	421.14230	.49370	.07800	-.00260	-.00180	.00060	-.00170
.599	10.610	.00360	.00000	419.62380	.59710	.10260	.00900	-.00240	.00090	-.00100
	GRADIENT	-.00005	.00000	-.02312	.05050	.00864	.00327	-.00014	.00010	.00005

ORIGINAL PAGE IS
OF POOR QUALITY

CA20 01 S2 S3 ORBITER DATA (BGN004) (20 JAN 75)

REFERENCE DATA

SREF = 2690.0000 SQ.FT. XMRP = 1109.0000 IN.XO
LREF = 474.8100 IN. YMRP = .0000 IN.YO
BREF = 936.6800 IN. ZMRP = 375.0000 IN.ZO
SCALE = .0300

PARAMETRIC DATA

ELEVON = 5.000 AILRON = .000
BETAO = .000 PHI = .000

RUN NO. 574/ 0 RN/L = 3.26 GRADIENT INTERVAL = .00/ 12.00

MACH	ALPHAO	BETAO	PHI	Q(PSF)	CL	CD	CLM	CY	CLN	CSL
.601	4.223	-.01610	.00000	421.09510	.27050	.04500	-.01810	.00380	.00090	-.00230
.601	8.337	-.01570	.00000	421.46490	.36930	.05820	-.01050	.00360	.00100	-.00250
.601	8.463	-.01510	.00000	421.47120	.47790	.07660	-.00450	.00400	.00080	-.00270
.601	10.562	-.01560	.00000	421.34220	.58320	.10080	.00570	.00360	.00110	-.00190
.599	12.700	-.01540	.00000	419.72320	.69680	.13880	.01410	.00220	.00190	-.00200
.601	14.797	-.01520	.00000	421.09510	.78020	.16130	.01770	.00510	.00060	-.00280
.600	16.872	-.01560	.00000	420.59770	.87110	.15570	.01350	.00530	.00050	-.00220
.599	17.711	-.01940	.00000	419.72470	.91550	.14950	.00700	.00630	.00080	-.00240
	GRADIENT	.00010	.00000	.03544	.04951	.00879	.00368	-.00001	.00002	.00005

CA20 02 S2 S3 ORBITER DATA (BGN005) (20 JAN 75)

REFERENCE DATA

SREF = 2690.0000 SQ.FT. XMRP = 1109.0000 IN.XO
LREF = 474.8100 IN. YMRP = .0000 IN.YO
BREF = 936.6800 IN. ZMRP = 375.0000 IN.ZO
SCALE = .0300

PARAMETRIC DATA

ELEVON = 5.000 AILRON = .000
BETAO = -5.000 PHI = .000

RUN NO. 578/ 0 RN/L = 2.87 GRADIENT INTERVAL = .00/ 12.00

MACH	ALPHAO	BETAO	PHI	Q(PSF)	CL	CD	CLM	CY	CLN	CSL
.479	4.174	-5.19730	.00000	291.63840	.25370	.07110	-.00780	.07410	.01080	-.00429
.480	6.255	-5.18090	.00000	292.44810	.34870	.08220	-.00220	.07360	.01040	-.00210
.480	8.348	-5.15870	.00000	292.71250	.44710	.09770	.00400	.07380	.00990	.00020
.480	10.422	-5.12870	.00000	292.71830	.54850	.11900	.01010	.07250	.00940	.00310
.479	12.509	-5.09190	.00000	292.04200	.65370	.14690	.01620	.07120	.00880	.00570
.480	14.604	-5.05140	.00000	292.99720	.76430	.18420	.02210	.06910	.00930	.00680
.479	16.697	-5.00170	.00000	292.17780	.86650	.24720	.02380	.07410	.00730	.00120
.479	17.586	-4.97870	.00000	292.17720	.90650	.27560	.02560	.07190	.00810	.00130
	GRADIENT	.01094	.00000	.16856	.04717	.00764	.00289	-.00022	-.00023	.00116

CA20 02 S2 S3 ORBITER DATA (BGN008) (20 JAN 75)

REFERENCE DATA

SREF = 2690.0000 SQ.FT. XMRP = 1109.0000 IN.XO
LREF = 474.8100 IN. YMRP = .0000 IN.YO
BREF = 936.6800 IN. ZMRP = 375.0000 IN.ZO
SCALE = .0300

PARAMETRIC DATA

ELEVON = 5.000 AILRON = .000
BETAO = .000 PHI = .000

RUN NO. 580/ 0 RN/L = 2.85 GRADIENT INTERVAL = .00/ 12.00

MACH	ALPHAO	BETAO	PHI	Q(PSF)	CL	CD	CLM	CY	CLN	CSL
.480	4.158	-.00970	.00000	292.58320	.25400	.07260	-.00820	.00310	.00090	-.00240
.480	6.223	-.00840	.00000	293.12360	.34920	.08150	-.00270	.00200	.00090	-.00230
.481	8.306	-.00890	.00000	293.52750	.45010	.09550	.00190	.00290	.00100	-.00270
.480	10.404	-.00670	.00000	292.31290	.55460	.11610	.00790	.00180	.00110	-.00230
.480	12.487	-.00660	.00000	293.12230	.65530	.14370	.01700	.00110	.00150	-.00200
.480	14.551	-.00580	.00000	292.98850	.76250	.18150	.02380	.00060	.00160	-.00190
.479	16.629	-.00540	.00000	291.63900	.87070	.24400	.02500	.00630	-.00050	-.00530
.480	17.347	-.00440	.00000	292.44870	.89940	.26990	.02660	.00430	.00030	-.00510
	GRADIENT	.00041	.00000	-.02021	.04816	.00694	.00254	-.00017	.00005	-.00000

RUN NO. 579/ 0 RN/L = 3.36 GRADIENT INTERVAL = .00/ 12.00

MACH	ALPHAO	BETAO	PHI	Q(PSF)	CL	CD	CLM	CY	CLN	CSL
.599	4.252	-.01100	.00000	418.77280	.26500	.07390	-.00840	.00250	.00070	-.00240
.599	6.355	-.01060	.00000	418.77130	.36540	.08410	-.00360	.00230	.00080	-.00220
.599	8.455	-.00860	.00000	418.77130	.47430	.10020	.00020	.00130	.00110	-.00230
.600	10.572	-.00830	.00000	419.27010	.58270	.12350	.00760	.00090	.00130	-.00180
.600	12.711	-.00930	.00000	419.64220	.69710	.16080	.01430	-.00050	.00230	-.00180
.600	14.811	-.00640	.00000	419.51870	.78260	.21870	.02040	.00140	.00100	-.00260
.600	16.885	-.00770	.00000	419.88940	.87160	.24520	.01720	.00130	.00120	-.00180
.599	17.522	-.00820	.00000	419.01690	.90110	.24450	.01310	.00140	.00120	-.00150
	GRADIENT	.00048	.00000	.07094	.05042	.00783	.00246	-.00028	.00010	.00008

ORIGINAL PAGE IS
OF POOR QUALITY

CA20 01 SI ORBITER DATA (BGN007) (20 JAN 75)

REFERENCE DATA

SREF = 2690.0000 SQ.FT. XMRP = 1109.0000 IN.XO
LREF = 474.8100 IN. YMRP = .0000 IN.YO
BREF = 936.6800 IN. ZMRP = 375.0000 IN.ZO
SCALE = .0300

PARAMETRIC DATA

ELEVON = 5.000 AILRON = .000
BETAO = -5.000 PHI = .000

RUN NO. 603/ 0 RN/L = 2.00 GRADIENT INTERVAL = .00/ 12.00

MACH	ALPHAO	BETAO	PHI	Q(PSF)	CL	CD	CLM	CY	CLN	CSL
.300	4.045	-5.06290	.00000	126.54920	.26110	.03430	-.03460	.04690	.01530	-.00670
.299	6.083	-5.07100	.00000	125.95630	.35200	.04440	-.02980	.04720	.01570	-.00540
.299	8.123	-5.07300	.00000	126.11250	.44320	.05940	-.02170	.04700	.01600	-.00350
.300	10.174	-5.06880	.00000	126.54970	.54410	.07750	-.02010	.04580	.01650	-.00040
.300	12.220	-5.05770	.00000	126.54950	.64100	.10120	-.01360	.04460	.01650	.00260
.299	14.238	-5.04120	.00000	126.25780	.73690	.13260	-.00390	.04400	.01690	.00380
.300	16.301	-5.01820	.00000	126.54970	.84220	.17280	.00140	.04230	.01750	.00580
.301	18.356	-4.98840	.00000	127.42390	.94870	.22170	.00660	.03970	.01750	.00920
.299	20.373	-4.95300	.00000	126.11200	1.04900	.27880	.01190	.03590	.01890	.01200
	GRADIENT	-.00096	.00000	.00738	.04603	.00703	.00253	-.00017	.00019	.00102

RUN NO. 604/ 0 RN/L = 3.41 GRADIENT INTERVAL = .00/ 12.00

MACH	ALPHAO	BETAO	PHI	Q(PSF)	CL	CD	CLM	CY	CLN	CSL
.600	4.178	-5.24280	.00000	423.48400	.25830	.04020	-.02660	.05110	.01510	-.00720
.600	6.295	-5.25310	.00000	423.61630	.37150	.04930	-.03010	.05150	.01550	-.00540
.601	8.427	-5.25380	.00000	424.11040	.48160	.06640	-.02640	.05040	.01580	-.00230
.600	10.623	-5.24760	.00000	423.24160	.59980	.09100	-.02470	.04910	.01610	.00150
.601	12.689	-5.23570	.00000	423.98610	.70980	.12390	-.01780	.04770	.01640	.00360
.601	14.810	-5.22000	.00000	423.86490	.80220	.17810	-.01440	.05200	.01620	-.00250
.599	15.845	-5.21260	.00000	422.24470	.84910	.20750	-.01410	.05260	.01700	-.00330
.601	16.884	-5.20230	.00000	423.66340	.89530	.24090	-.01510	.05200	.01780	-.00320
.601	19.013	-5.17300	.00000	424.10410	.98040	.31420	-.01750	.05140	.01800	-.00040
.600	21.153	-5.14920	.00000	422.98760	1.09090	.39000	-.01400	.05630	.01890	-.00190
	GRADIENT	-.00069	.00000	-.01190	.05286	.00791	.00044	-.00033	.00015	.00136

CA20 01 SI ORBITER DATA (BGN008) (20 JAN 75)

REFERENCE DATA

SREF = 2690.0000 SQ.FT. XMRP = 1109.0000 IN.XO
LREF = 474.8100 IN. YMRP = .0000 IN.YO
BREF = 936.6800 IN. ZMRP = 375.0000 IN.ZO
SCALE = .0300

PARAMETRIC DATA

ELEVON = .000 AILRON = .000
BETAO = .000 PHI = .000

RUN NO. 614/ 0 RN/L = 3.26 GRADIENT INTERVAL = .00/ 12.00

MACH	ALPHAO	BETAO	PHI	Q(PSF)	CL	CD	CLM	CY	CLN	CSL
.601	4.204	.01530	.00000	423.96270	.13420	.04000	.03630	-.00130	-.00180	-.00080
.600	6.291	.01390	.00000	423.59130	.23920	.04500	.03980	-.00190	-.00120	-.00110
.600	8.408	.01220	.00000	423.46700	.34880	.05680	.04330	-.00210	-.00070	-.00130
.600	10.522	.00900	.00000	422.84840	.46170	.07420	.04750	-.00190	-.00020	-.00140
.599	12.651	.00610	.00000	422.59380	.57590	.10280	.05270	-.00270	.00080	-.00150
.599	14.756	.00570	.00000	422.34520	.67690	.15240	.05200	.00060	-.00090	-.00210
.599	16.848	.00370	.00000	422.47770	.77920	.21230	.04890	.00190	-.00100	-.00250
.600	18.960	.00240	.00000	423.71730	.89390	.28730	.03840	.00040	-.00020	-.00130
.600	21.090	.00300	.00000	423.72040	1.02240	.37000	.03150	-.00140	.00050	-.00060
	GRADIENT	-.00098	.00000	-.16454	.05183	.00543	.00176	-.00009	.00025	-.00009

CA20 01 SI ORBITER DATA (BGN009) (20 JAN 75)

REFERENCE DATA

SREF = 2690.0000 SQ.FT. XMRP = 1109.0000 IN.XO
LREF = 474.8100 IN. YMRP = .0000 IN.YO
BREF = 936.6800 IN. ZMRP = 375.0000 IN.ZO
SCALE = .0300

PARAMETRIC DATA

ELEVON = 5.000 AILRON = -10.000
BETAO = .000 PHI = .000

RUN NO. 613/ 0 RN/L = 3.26 GRADIENT INTERVAL = .00/ 12.00

MACH	ALPHAO	BETAO	PHI	Q(PSF)	CL	CD	CLM	CY	CLN	CSL
.601	4.208	-.08060	.00000	423.85550	.24540	.05150	-.01500	.04200	-.00560	-.04560
.600	6.333	-.08740	.00000	423.11090	.34860	.06130	-.01010	.04280	-.00300	-.04690
.601	8.429	-.09510	.00000	424.10410	.45760	.07730	-.00690	.04500	-.00100	-.04810
.599	10.544	-.10620	.00000	422.61220	.57770	.10050	-.00690	.04630	.00250	-.05030
.601	12.646	-.11390	.00000	423.86020	.69510	.13380	-.00440	.04530	.00630	-.05030
.600	14.760	-.10790	.00000	423.35970	.78120	.18670	.00120	.04610	.00500	-.04930
.600	16.873	-.10470	.00000	423.35810	.86690	.24890	.00430	.04910	.00350	-.03950
.601	18.987	-.11590	.00000	423.85230	.98760	.32840	-.00560	.05480	.00460	-.04110
.600	21.110	-.11510	.00000	423.61470	1.10280	.41020	-.00810	.05500	.00520	-.03860
	GRADIENT	-.00400	.00000	-.13007	.05240	.00772	.00130	.00072	.00125	-.00073

CA20 01 S1 ORBITER DATA (GGN010) (20 JAN 75)

REFERENCE DATA

SREF = 2690.0000 SQ.FT. XMRP = 1109.0000 IN.XO
LREF = 474.8100 IN. YMRP = .0000 IN.YO
BREF = 936.6800 IN. ZMRP = 375.0000 IN.ZO
SCALE = .0300

PARAMETRIC DATA

ELEVON = 5.000 AILRON = .000
BETAO = .000 PHI = .000

RUN NO. 615/ 0 RN/L = 1.92 GRADIENT INTERVAL = .00/ 12.00

MACH	ALPHAO	BETAO	PHI	Q(PSF)	CL	CD	CLM	CY	CLN	CSL
.299	4.061	.00330	.00000	126.24970	.23020	.04280	-.01470	-.00060	-.00140	-.00150
.299	6.090	.00410	.00000	125.95810	.32830	.04990	-.01150	-.00180	-.00120	-.00170
.299	8.121	.00330	.00000	126.10420	.42510	.06130	-.00880	-.00150	-.00080	-.00200
.299	10.153	.00210	.00000	126.24990	.52070	.07890	-.00420	-.00120	-.00020	-.00240
.299	12.193	.00140	.00000	126.24980	.61580	.10180	.00390	-.00100	.00030	-.00250
.300	14.219	.00060	.00000	126.68710	.71460	.13220	.01120	-.00020	.00030	-.00230
.300	16.263	-.00030	.00000	126.54150	.82210	.17310	.01470	.00020	.00060	-.00190
.300	18.293	-.00030	.00000	126.54150	.93330	.22250	.01520	-.00040	.00110	-.00190
.300	20.317	-.00160	.00000	126.97880	1.03530	.28040	.01930	.00000	.00150	-.00140
	GRADIENT	-.00022	.00000	.00724	.04768	.00589	.00168	-.00007	.00020	-.00015

RUN NO. 616/ 0 RN/L = 3.25 GRADIENT INTERVAL = .00/ 12.00

MACH	ALPHAO	BETAO	PHI	Q(PSF)	CL	CD	CLM	CY	CLN	CSL
.600	4.211	.01350	.00000	423.58030	.23620	.04970	-.00830	-.00070	-.00180	-.00140
.599	6.315	.01230	.00000	422.46280	.34020	.05870	-.00430	-.00130	-.00120	-.00160
.600	8.424	.01050	.00000	423.58350	.45120	.07350	-.00280	-.00150	-.00070	-.00190
.601	10.546	.00810	.00000	424.08230	.56030	.09490	.00370	-.00140	-.00030	-.00190
.600	12.674	.00470	.00000	423.58510	.67890	.12850	.00760	-.00190	.00060	-.00170
.599	14.748	.00310	.00000	422.09200	.76650	.18150	.00920	.00270	-.00100	-.00380
.601	16.858	.00120	.00000	424.08230	.86920	.24560	.00550	.00320	-.00110	-.00300
.600	18.972	.00120	.00000	422.83640	.98620	.32470	-.00640	.00120	-.00030	-.00190
.601	21.105	.00240	.00000	423.83530	1.11120	.41020	-.01190	-.00010	.00000	-.00110
	GRADIENT	-.00085	.00000	.12460	.05131	.00713	.00178	-.00011	.00024	-.00009

C.4

ORIGINAL PAGE IS
OF POOR QUALITY

CA20 01 SI ORBITER DATA (BGN011) (20 JAN 75)

REFERENCE DATA

SREF = 2690.0000 SQ.FT. XMRP = 1109.0000 IN.XO
LREF = 474.8100 IN. YMRP = .0000 IN.YO
BREF = 936.6800 IN. ZMRP = 375.0000 IN.ZO
SCALE = .0300

PARAMETRIC DATA

ELEVON = 10.000 AILRON = .000
BETAO = .000 PHI = .000

RUN NO. 612/ 0 RN/L = 3.27 GRADIENT INTERVAL = .00/ 12.00

MACH	ALPHAO	BETAO	PHI	Q(PSF)	CL	CD	CLM	CY	CLN	CSL
.600	4.238	.01350	.00000	423.49350	.34000	.06520	-.05370	-.00080	-.00170	-.00130
.599	6.342	.01400	.00000	422.74630	.44300	.07760	-.04990	-.00170	-.00130	-.00150
.600	8.451	.01210	.00000	422.87430	.55180	.09650	-.04680	-.00150	-.00100	-.00150
.599	10.597	.00890	.00000	422.75080	.66670	.12380	-.04220	-.00150	-.00040	-.00170
.601	12.718	.00580	.00000	424.11830	.78760	.16310	-.03940	-.00130	.00010	-.00170
.599	14.781	.00460	.00000	422.62720	.86610	.21730	-.03350	.00090	-.00080	-.00200
.601	16.872	.00200	.00000	424.24260	.95390	.28460	-.03770	.00250	-.00090	-.00260
.599	18.996	.00230	.00000	422.37710	1.07740	.36780	-.05010	.00140	-.00050	-.00190
.600	21.148	.00390	.00000	423.62100	1.19740	.45620	-.05470	-.00040	-.00030	-.00060
	GRADIENT	-.00074	.00000	-.09890	.05140	.00920	.00178	-.00009	.00020	-.00008

CA20 01 SI ORBITER DATA (BGN012) (20 JAN 75)

REFERENCE DATA

SREF = 2690.0000 SQ.FT. XMRP = 1109.0000 IN.XO
LREF = 474.8100 IN. YMRP = .0000 IN.YO
BREF = 936.6800 IN. ZMRP = 375.0000 IN.ZO
SCALE = .0300

PARAMETRIC DATA

ELEVON = 5.000 AILRON = .000
ALPHAO = 10.000 BETAO = -5.000
PHI = .000

RUN NO. 605/ 0 RN/L = 3.33 GRADIENT INTERVAL = .00/ 12.00

MACH	DZ	ALPHAO	BETAO	PHI	Q(PSF)	CL	CD	CLM	CY	CLN	CSL
.600	1.169	10.54150	-5.25180	.00000	423.24940	.59940	.09110	-.02510	.05020	.01610	.00150
.600	5.634	10.54060	-5.25340	.00000	423.61630	.59740	.09090	-.02500	.05060	.01620	.00150
.600	10.389	10.53980	-5.25530	.00000	423.49190	.59660	.09100	-.02500	.05110	.01620	.00140
.600	25.346	10.53200	-5.26390	.00000	423.37230	.59360	.09120	-.02780	.05300	.01670	.00140
.601	40.230	10.52230	-5.26660	.00000	424.24100	.58880	.09120	-.02860	.05380	.01670	.00070
.601	47.384	10.52120	-5.27080	.00000	423.86810	.58580	.09130	-.02890	.05460	.01710	.00040
	GRADIENT	-.00023	-.00038	.00000	.02573	-.00030	-.00001	.00001	.00010	.00001	-.00002

CA20 01 SI ORBITER DATA (BGN013) (20 JAN 75)

REFERENCE DATA

SREF = 2690.0000 SQ.FT. XMRP = 1109.0000 IN.XO
LREF = 474.8100 IN. YMRP = .0000 IN.YO
BREF = 936.6800 IN. ZMRP = 375.0000 IN.ZO
SCALE = .0300

PARAMETRIC DATA

ELEVON = 5.000 AILRON = .000
ALPHAO = 14.000 BETAO = -5.000
PHI = .000

RUN NO. 606/ 0 RN/L = 3.30 GRADIENT INTERVAL = .00/ 12.00

MACH	DZ	ALPHAO	BETAO	PHI	Q(PSF)	CL	CD	CLM	CY	CLN	CSL
.600	25.012	14.78300	-5.23890	.00000	423.38010	.80130	.17870	-.01770	.05700	.01690	-.00300
.599	29.470	14.77880	-5.23720	.00000	422.50390	.79950	.17780	-.01820	.05690	.01670	-.00290
.599	37.617	14.77480	-5.23790	.00000	422.38030	.79720	.17730	-.01910	.05710	.01670	-.00290
.600	49.099	14.77730	-5.24060	.00000	423.00110	.79360	.17660	-.01930	.05750	.01690	-.00300
.599	64.081	14.77120	-5.24720	.00000	422.63050	.78840	.17510	-.01820	.05890	.01730	-.00280
.600	71.262	14.77250	-5.24830	.00000	423.50760	.78490	.17460	-.01790	.05930	.01720	-.00260
	GRADIENT	.00000	.00000	.00000	.00000	.00000	.00000	.00000	.00000	.00000	.00000

CA20 01 SI ORBITER DATA (BGN014) (20 JAN 75)

REFERENCE DATA

SREF = 2690.0000 SQ.FT. XMRP = 1109.0000 IN.XO
LREF = 474.8100 IN. YMRP = .0000 IN.YO
BREF = 936.6800 IN. ZMRP = 375.0000 IN.ZO
SCALE = .0300

PARAMETRIC DATA

ELEVON = 5.000 AILRON = .000
ALPHAO = 7.500 PHI = -90.000

RUN NO. 617/ 0 RN/L = 3.29 GRADIENT INTERVAL = -5.00/ 5.00

MACH	BETAO	ALPHAO	PHI	Q(PSF)	CL	CD	CLM	CY	CLN	CSL
.601	-15.806	7.57180	-90.00000	423.56140	.43820	.05530	-.02870	.15950	.04660	-.00620
.600	-10.549	7.58110	-90.00000	422.94290	.44860	.05970	-.02310	.10270	.03380	-.00210
.600	-7.913	7.58580	-90.00000	423.43870	.45350	.06070	-.02180	.07850	.02540	-.00130
.601	-5.281	7.58490	-90.00000	423.93590	.46750	.05950	-.02920	.05250	.01790	-.00110
.601	-2.654	7.59120	-90.00000	423.56460	.46660	.05790	-.02520	.02670	.01010	-.00080
.600	-.011	7.60700	-90.00000	423.18690	.44190	.06560	-.00420	.00190	.00170	.00020
.601	2.618	7.59750	-90.00000	423.56140	.46000	.05960	-.02110	-.02190	-.00730	.00040
	GRADIENT	.00120	-.0 00	-.00072	-.00126	.00032	.00078	-.00922	-.00330	.00023

CA20 02 SI ORBITER DATA (BGN015) (20 JAN 75)

REFERENCE DATA

SREF = 2690.0000 SQ.FT. XMRP = 1109.0000 IN.XO
LREF = 474.8100 IN. YMRP = .0000 IN.YO
BREF = 936.6800 IN. ZMRP = 375.0000 IN.ZO
SCALE = .0300

PARAMETRIC DATA

ELEVON = 5.000 AILRON = .000
BETAO = -5.000 PHI = .000

RUN NO. 607/ 0 RN/L = 3.38 GRADIENT INTERVAL = .00/ 12.00

MACH	ALPHAO	BETAO	PHI	Q(PSF)	CL	CD	CLM	CY	CLN	CSL
.599	4.229	-5.23650	.00000	422.23130	.24660	.07020	-.00980	.05650	.01100	-.00510
.599	6.328	-5.24470	.00000	422.36080	.34710	.08070	-.00550	.05760	.01070	-.00340
.600	8.482	-5.24320	.00000	422.73450	.45510	.09700	.00000	.05730	.01020	-.00070
.600	10.601	-5.23780	.00000	422.73450	.56370	.11940	.00590	.05720	.00980	.00260
.600	12.705	-5.22610	.00000	423.60520	.67530	.15130	.01220	.05570	.01000	.00480
.601	14.833	-5.21540	.00000	423.85230	.76530	.20540	.01770	.08280	.00930	-.00250
.600	16.936	-5.19680	.00000	423.36130	.85250	.26840	.02120	.06380	.01040	-.00350
.599	19.038	-5.16980	.00000	422.23730	.95060	.34140	.02110	.06550	.00970	-.00060
.601	21.209	-5.14720	.00000	423.99450	1.04530	.41770	.02640	.06980	.01100	-.00260
	GRADIENT	-.00011	.00000	.08854	.04981	.00771	.00247	.00008	-.00019	.00121

CA20 02 SI ORBITER DATA (BGN016) (20 JAN 75)

REFERENCE DATA

SREF = 2690.0000 SQ.FT. XMRP = 1109.0000 IN.XO
LREF = 474.8100 IN. YMRP = .0000 IN.YO
BREF = 936.6800 IN. ZMRP = 375.0000 IN.ZO
SCALE = .0300

PARAMETRIC DATA

ELEVON = .000 AILRON = .000
BETAO = .000 PHI = .000

RUN NO. 609/ 0 RN/L = 3.28 GRADIENT INTERVAL = .00/ 12.00

MACH	ALPHAO	BETAO	PHI	Q(PSF)	CL	CD	CLM	CY	CLN	CSL
.599	4.212	.01340	.00000	422.91030	.14700	.05730	.03440	-.00330	-.00040	-.00090
.600	6.318	.01210	.00000	423.53260	.24930	.06350	.03940	-.00320	-.00020	-.00120
.600	8.418	.01090	.00000	423.16340	.35660	.07490	.04280	-.00310	.00000	-.00150
.600	10.540	.00790	.00000	423.65870	.46680	.09420	.04900	-.00270	.00040	-.00160
.600	12.677	.00480	.00000	423.53410	.57810	.12480	.05690	-.00360	.00150	-.00160
.601	14.777	.00390	.00000	424.28360	.67170	.17630	.06110	.00000	-.00010	-.00210
.600	16.898	.00140	.00000	423.91370	.76870	.23760	.06310	.00040	.00040	-.00290
.600	18.990	-.00220	.00000	423.90740	.86980	.31130	.05900	-.00010	.00140	-.00270
.600	21.120	-.00970	.00000	424.16240	.97540	.39010	.05980	.00200	.00270	-.00510
	GRADIENT	-.00084	.00000	.08907	.05059	.00579	.00224	.00009	.00012	-.00011

CA20 02 SI ORBITER DATA (BGN017) (20 JAN 75)

REFERENCE DATA

SREF = 2690.0000 SQ.FT. XMRP = 1109.0000 IN.XO
LREF = 474.8100 IN. YMRP = .0000 IN.YO
BREF = 936.6800 IN. ZMRP = 375.0000 IN.ZO
SCALE = .0300

PARAMETRIC DATA

ELEVON = 5.000 AILRON = -10.000
BETAO = .000 PHI = .000

RUN NO. 610/ 0 RN/L = 3.28 GRADIENT INTERVAL = .00/ 12.00

MACH	ALPHAO	BETAO	PHI	Q(PSF)	CL	CD	CLM	CY	CLN	CSL
.600	4.228	-.06650	.00000	423.26900	.24060	.07890	-.00800	.02950	-.00140	-.04450
.600	6.329	-.07240	.00000	423.64300	.34030	.08830	-.00320	.03070	.00070	-.04550
.600	8.429	-.08040	.00000	423.76890	.44810	.10360	-.00010	.03260	.00290	-.04610
.600	10.561	-.09230	.00000	423.69640	.56450	.12830	.00220	.03510	.00580	-.04830
.600	12.669	-.09850	.00000	423.77200	.67460	.16250	.01040	.03480	.00890	-.04820
.600	14.791	-.09710	.00000	423.52640	.75850	.21740	.01720	.03580	.00840	-.04150
.600	16.883	-.09230	.00000	423.64770	.84020	.28060	.02110	.03390	.00920	-.03760
.601	18.999	-.10270	.00000	424.39060	.94750	.35910	.01630	.03590	.01200	-.03880
.601	21.118	-.10760	.00000	424.39370	1.04560	.43720	.01980	.03600	.01460	-.03850
	GRADIENT	-.00405	.00000	.09511	.05117	.00775	.00168	.00089	.00113	-.00057

CA20 02 SI ORBITER DATA (BGN018) (20 JAN 75)

REFERENCE DATA

SREF = 2690.0000 SQ.FT. XMRP = 1109.0000 IN.XO
LREF = 474.8100 IN. YMRP = .0000 IN.YO
BREF = 936.6800 IN. ZMRP = 375.0000 IN.ZO
SCALE = .0300

PARAMETRIC DATA

ELEVON = 5.000 AILRON = .000
BETAO = .000 PHI = .000

RUN NO. 608/ 0 RN/L = 3.28 GRADIENT INTERVAL = .00/ 12.00

MACH	ALPHAO	BETAO	PHI	Q(PSF)	CL	CD	CLM	CY	CLN	CSL
.600	4.223	.01150	.00000	423.91840	.24750	.06850	-.00890	-.00320	-.00010	-.00160
.600	6.348	.01050	.00000	424.15770	.34980	.07800	-.00470	-.00300	.00000	-.00190
.599	8.436	.01020	.00000	422.91660	.45750	.09320	-.00120	-.00330	.00040	-.00200
.600	10.556	.00700	.00000	424.16400	.56430	.11560	.00600	-.00280	.00060	-.00170
.600	12.678	.00430	.00000	423.41980	.67850	.15110	.01270	-.00340	.00150	-.00190
.600	14.781	.00260	.00000	423.54630	.75970	.20660	.01900	.00060	.00010	-.00330
.601	16.897	.00050	.00000	424.78870	.84970	.26860	.02420	-.00040	.00090	-.00270
.600	19.006	-.00550	.00000	424.16560	.95400	.34920	.01760	.00090	.00220	-.00440
.600	21.118	-.01370	.00000	424.04430	1.05640	.42890	.01890	.00350	.00330	-.00700
	GRADIENT	-.00065	.00000	-.02337	.05018	.00742	.00229	.00004	.00012	-.00002

CA20 02 S1 ORBITER DATA (BGN019) (30 JUL 75)

REFERENCE DATA

SREF = 2690.0000 SQ.FT. XMRP = 1109.0000 IN.XO
LREF = 474.8100 IN. YMRP = .0000 IN.YO
BREF = 936.6800 IN. ZMRP = 375.0000 IN.ZO
SCALE = .0300

PARAMETRIC DATA

ELEVON = 10.000 AILRON = .000
BETAO = .000 PHI = .000

RUN NO. 611/ 0 RN/L = 3.26 GRADIENT INTERVAL = .00/ 12.00

MACH	ALPHAO	BETAO	PHI	Q(PSF)	CL	CD	CLM	CY	CLN	CSL
.599	4.246	.01150	.00000	422.50070	.35030	.08480	-.05440	-.00280	-.00030	-.00160
.599	6.328	.00920	.00000	422.50220	.44940	.09760	-.05030	-.00250	.00000	-.00180
.599	8.470	.00770	.00000	422.62420	.55820	.11710	-.04620	-.00230	.00020	-.00180
.600	10.583	.00630	.00000	423.62250	.67180	.14490	-.04250	-.00250	.00080	-.00180
.600	12.694	.00340	.00000	422.99940	.78650	.18580	-.03650	-.00250	.00120	-.00170
.599	14.800	-.00080	.00000	422.50220	.85720	.24400	-.02630	.00090	.00020	-.00230
.600	16.894	-.00140	.00000	423.25240	.93680	.31210	-.02170	.00110	.00030	-.00220
.601	19.022	-.00230	.00000	423.99560	1.05390	.39850	-.02990	.00010	.00100	-.00170
.601	21.151	.00050	.00000	424.24730	1.16450	.48570	-.02960	-.00140	.00090	-.00040
	GRADIENT	-.00081	.00000	.16506	.05075	.00945	.00188	.00005	.00014	-.00003

CA20 03 S2 ORBITER DATA (BGN020) (20 JAN 75)

REFERENCE DATA

SREF = 2690.0000 SQ.FT. XMRP = 1109.0000 IN.XO
LREF = 474.8100 IN. YMRP = .0000 IN.YO
BREF = 936.6800 IN. ZMRP = 375.0000 IN.ZO
SCALE = .0300

PARAMETRIC DATA

ELEVON = 5.000 AILRON = .000
BETAO = -5.000 PHI = .000
RUDDER = .000

RUN NO. 597/ 0 RN/L = 1.92 GRADIENT INTERVAL = .00/ 12.00

MACH	ALPHAO	BETAO	PHI	Q(PSF)	CL	CD	CLM	CY	CLN	CSL
.301	.013	-5.10740	.00000	127.12640	.07990	.02980	-.03550	.12150	-.00550	.00690
.300	4.093	-5.09790	.00000	126.10590	.26630	.04070	-.02080	.12130	-.00530	.00910
.300	6.198	-5.08310	.00000	126.10580	.36210	.05170	-.01550	.12050	-.00510	.00920
.299	8.186	-5.06230	.00000	125.81440	.45860	.06580	-.01330	.11850	-.00470	.01040
.300	10.206	-5.03460	.00000	126.10550	.55650	.08530	-.00970	.11560	-.00470	.01260
.299	12.246	-4.99980	.00000	125.96010	.65460	.11050	-.00610	.11370	-.00550	.01450
.299	14.299	-4.95950	.00000	125.66950	.75410	.14360	.00270	.11230	-.00570	.01480
.301	15.394	-4.93560	.00000	126.83460	.81010	.16480	.00460	.11040	-.00600	.01560
.299	16.289	-4.91390	.00000	125.66830	.85760	.18430	.00530	.10940	-.00590	.01590
.301	17.247	-4.89080	.00000	127.12620	.90620	.20590	.00760	.10720	-.00590	.01680
	GRADIENT	.00699	.00000	-.10638	.04669	.00532	.00251	-.00055	.00009	.00051

CA20 03 S2 ORBITER DATA (BGN020) (20 JAN 75)

REFERENCE DATA

SREF = 2690.0000 SQ.FT. XMRP = 1109.0000 IN.XO
LREF = 474.8100 IN. YMRP = .0000 IN.YO
BREF = 936.6800 IN. ZMRP = 375.0000 IN.ZO
SCALE = .0300

PARAMETRIC DATA

ELEVON = 5.000 AILRON = .000
BETAO = -5.000 PHI = .000
RUDDER = .000

RUN NO. 595/ 0 RN/L = 3.30 GRADIENT INTERVAL = .00/ 12.00

MACH	ALPHAO	BETAO	PHI	Q(PSF)	CL	CD	CLM	CY	CLN	CSL
.599	.035	-5.38780	.00000	421.64720	.09310	.03010	-.04150	.13650	-.00820	.00820
.600	4.232	-5.37140	.00000	422.76460	.28860	.04240	-.02750	.13280	-.00810	.01050
.601	8.365	-5.35520	.00000	423.13920	.39730	.05530	-.02250	.13100	-.00790	.01130
.600	8.467	-5.32590	.00000	422.52070	.50640	.07300	-.02040	.12750	-.00790	.01320
.600	10.623	-5.28760	.00000	421.89280	.62350	.09930	-.01940	.12220	-.00770	.01590
.600	12.737	-5.24920	.00000	422.14590	.73820	.13630	-.01470	.12120	-.00860	.01630
.599	14.875	-5.20470	.00000	421.52060	.83010	.19470	-.01390	.12530	-.01000	.00890
.599	16.957	-5.14840	.00000	421.27050	.91790	.26110	-.01830	.12010	-.00940	.00990
.599	17.897	-5.12170	.00000	421.51910	.95820	.29380	-.02180	.11930	-.00940	.00860
	GRADIENT	.00921	.00000	.03117	.05004	.00636	.00212	-.00129	.00005	.00069

CA20 03 S2 ORBITER DATA (BGN021) (20 JAN 75)

REFERENCE DATA

SREF = 2690.0000 SQ.FT. XMRP = 1109.0000 IN.XO
LREF = 474.8100 IN. YMRP = .0000 IN.YO
BREF = 936.6800 IN. ZMRP = 375.0000 IN.ZO
SCALE = .0300

PARAMETRIC DATA

ELEVON = 5.000 AILRON = .000
BETAO = .000 PHI = .000
RUDDER = .000

RUN NO. 592/ 0 RN/L = 1.93 GRADIENT INTERVAL = .00/ 12.00

MACH	ALPHAO	BETAO	PHI	Q(PSF)	CL	CD	CLM	CY	CLN	CSL
.300	6.127	-.00720	.00000	126.25070	.34830	.05380	-.00770	.00940	-.00060	-.00160
.299	8.218	-.00770	.00000	125.95930	.45260	.06760	-.00810	.00970	-.00050	-.00230
.300	10.249	-.00840	.00000	126.54240	.55310	.08670	-.00550	.01020	-.00030	-.00260
.300	12.161	-.00820	.00000	126.66810	.64240	.10970	.00180	.00960	.00000	-.00210
.301	13.240	-.00860	.00000	126.97970	.69340	.12550	.00540	.00970	.00030	-.00220
.300	14.288	-.00840	.00000	126.39560	.74750	.14350	.00740	.00900	.00040	-.00180
.300	15.234	-.00890	.00000	126.25050	.79670	.16190	.00930	.00940	.00060	-.00190
.300	16.234	-.00850	.00000	126.54220	.84800	.18220	.00930	.00840	.00090	-.00150
.299	17.171	-.00790	.00000	125.81300	.90250	.20480	.00990	.00740	.00110	-.00130
	GRADIENT	-.00029	.00000	.05972	.04968	.00797	.00053	.00019	.00012	-.00024

ORIGINAL PAGE IS
OF POOR QUALITY

CA20 03 S2 ORBITER DATA (BGN021) (20 JAN 75)

REFERENCE DATA

SREF = 2690.0000 SQ.FT. XMRP = 1109.0000 IN.XO
LREF = 474.8100 IN. YMRP = .0000 IN.YO
BREF = 936.6800 IN. ZMRP = 375.0000 IN.ZO
SCALE = .0300

PARAMETRIC DATA

ELEVON = 5.000 AILRON = .000
BETAO = .000 PHI = .000
RUDDER = .000

RUN NO. 593/ 0 RN/L = 2.95 GRADIENT INTERVAL = .00/ 12.00

MACH	ALPHAO	BETAO	PHI	Q(PSF)	CL	CD	CLM	CY	CLN	CSL
.500	.021	-.01690	.00000	315.51970	.07070	.03440	-.02810	.00930	-.00120	-.00120
.500	6.288	-.01650	.00000	315.38310	.37020	.05570	-.01040	.00870	-.00080	-.00160
.501	8.345	-.01950	.00000	315.78540	.47750	.07080	-.01140	.00970	-.00050	-.00200
.500	10.377	-.01860	.00000	315.51740	.58250	.09180	-.00770	.00890	-.00020	-.00190
.499	11.441	-.01910	.00000	314.18100	.63330	.10480	-.00410	.00920	-.00030	-.00160
.501	12.561	-.01960	.00000	316.16530	.68980	.12110	-.00010	.00920	-.00020	-.00140
.499	13.630	-.01780	.00000	314.71710	.74690	.13960	.00290	.00810	.00010	-.00150
.500	14.666	-.02050	.00000	315.51020	.80300	.16110	.00380	.00900	.00020	-.00130
.499	15.681	-.01850	.00000	314.71570	.85740	.19350	.00120	.01430	-.00230	-.00410
.499	16.641	-.01970	.00000	314.31610	.90110	.22590	-.00130	.01530	-.00190	-.00610
.500	17.602	-.01940	.00000	314.98370	.94380	.25810	-.00230	.01320	-.00100	-.00510
	GRADIENT	-.00021	.00000	-.06291	.04940	.00594	.00198	-.00001	.00009	-.00005

RUN NO. 594/ 0 RN/L = 3.30 GRADIENT INTERVAL = .00/ 12.00

MACH	ALPHAO	BETAO	PHI	Q(PSF)	CL	CD	CLM	CY	CLN	CSL
.599	.046	-.02060	.00000	421.64420	.07640	.03560	-.02880	.00950	-.00160	-.00080
.600	6.384	-.02280	.00000	422.64030	.38840	.05880	-.01320	.00890	-.00080	-.00170
.601	8.515	-.02350	.00000	422.89210	.50410	.07610	-.01390	.00880	-.00060	-.00140
.600	10.508	-.02330	.00000	422.38840	.60930	.09880	-.00950	.00800	-.00020	-.00080
.600	11.633	-.02300	.00000	422.51690	.66920	.11600	-.00620	.00700	.00040	-.00110
.600	12.738	-.02410	.00000	422.39160	.73140	.13820	-.00440	.00690	.00060	-.00070
.600	13.755	-.02420	.00000	422.26880	.78970	.16630	-.00340	.01030	-.00060	-.00240
.601	14.842	-.02510	.00000	422.89060	.81470	.19560	-.00380	.01100	-.00080	-.00330
.601	15.883	-.02360	.00000	422.88580	.86450	.22710	-.00640	.01060	-.00070	-.00340
.601	16.938	-.02130	.00000	423.13920	.91440	.26200	-.01000	.00960	-.00080	-.00240
.599	17.825	-.02410	.00000	421.64570	.96130	.29410	-.01510	.01010	-.00030	-.00300
	GRADIENT	-.00023	.00000	.07526	.05115	.00661	.00185	-.00018	.00016	-.00001

CA20 03 S2 ORBITER DATA (BGN022) (20 JAN 75)

REFERENCE DATA

SREF = 2690.0000 SQ.FT. XMRP = 1109.0000 IN.XO
LREF = 474.8100 IN. YMRP = .0000 IN.YO
BREF = 936.6800 IN. ZMRP = 375.0000 IN.ZO
SCALE = .0300

PARAMETRIC DATA

ELEVON = 5.000 AILRON = .000
BETAO = .000 PHI = .000
RUDDER = .000

RUN NO. 591/ 0 RN/L = 3.38 GRADIENT INTERVAL = .00/ 12.00

MACH	ALPHAO	BETAO	PHI	Q(PSF)	CL	CD	CLM	CY	CLN	CSL
.600	.035	-.02340	.00000	422.76780	.07490	.03540	-.02880	.01040	-.00170	-.00100
.600	6.359	-.02490	.00000	422.52070	.38560	.05830	-.01410	.00980	-.00090	-.00140
.599	8.489	-.02600	.00000	421.40150	.50180	.07570	-.01480	.00970	-.00060	-.00150
.599	10.617	-.02650	.00000	421.52360	.61190	.09980	-.00910	.00900	-.00010	-.00090
.600	12.671	-.02540	.00000	422.64500	.72540	.13590	-.00360	.00750	.00050	-.00090
.601	13.745	-.02620	.00000	423.14080	.76840	.16530	-.00370	.01060	-.00060	-.00250
.600	14.812	-.02600	.00000	422.27350	.81360	.19420	-.00380	.01110	-.00070	-.00290
.599	15.797	-.02660	.00000	421.27050	.86060	.22380	-.00570	.01180	-.00080	-.00340
.599	16.912	-.02280	.00000	421.52360	.91200	.26030	-.00990	.01000	-.00060	-.00260
.601	17.858	-.02570	.00000	422.89210	.96330	.29550	-.01510	.01060	-.00030	-.00300
	GRADIENT	-.00030	.00000	-.13026	.05068	.00571	.00178	-.00012	.00015	-.00001

CA20 03 S2 ORBITER DATA (BGN023) (20 JAN 75)

REFERENCE DATA

SREF = 2690.0000 SQ.FT. XMRP = 1109.0000 IN.XO
LREF = 474.8100 IN. YMRP = .0000 IN.YO
BREF = 936.6800 IN. ZMRP = 375.0000 IN.ZO
SCALE = .0300

PARAMETRIC DATA

ELEVON = 5.000 AILRON = .000
BETAO = .000 PHI = .000
RUDDER = 15.000

RUN NO. 589/ 0 RN/L = 3.33 GRADIENT INTERVAL = .00/ 12.00

MACH	ALPHAO	BETAO	PHI	Q(PSF)	CL	CD	CLM	CY	CLN	CSL
.600	6.417	-.04880	.00000	422.24990	.37920	.06760	-.00480	.04490	-.01630	.00380
.600	8.452	-.04960	.00000	421.62770	.48770	.08390	-.00460	.04570	-.01660	.00330
.599	10.659	-.04630	.00000	421.12590	.60130	.10780	.00310	.04320	-.01610	.00350
.599	12.653	-.04920	.00000	421.37910	.71070	.14170	.00600	.04250	-.01520	.00280
.599	14.754	-.04620	.00000	421.50120	.80160	.19870	.00560	.04520	-.01680	.00040
.600	15.887	-.04710	.00000	421.74970	.85500	.23240	.00260	.04570	-.01670	-.00040
.599	16.873	-.04400	.00000	421.25550	.90090	.26480	-.00230	.04470	-.01690	.00010
	GRADIENT	.00060	.00000	-.26447	.05235	.00950	.00189	-.00041	.00005	-.00007

CA20 05 S2 ORBITER DATA (BGN024) (20 JAN 75)

REFERENCE DATA

SREF = 2690.0000 SQ.FT. XMRP = 1109.0000 IN.XO
LREF = 474.8100 IN. YMRP = .0000 IN.YO
BREF = 936.6800 IN. ZMRP = 375.0000 IN.ZO
SCALE = .0300

PARAMETRIC DATA

ELEVON = 5.000 AILRON = .000
BETAO = -5.000 PHI = .000
RUDDER = .000

RUN NO. 598/ 0 RN/L = 3.35 GRADIENT INTERVAL = .00/ 12.00

MACH	ALPHAO	BETAO	PHI	Q(PSF)	CL	CD	CLM	CY	CLN	CSL
.599	.034	-5.36100	.00000	421.92130	.07650	.06360	-.02340	.12770	-.00790	.00690
.601	4.328	-5.34450	.00000	423.28870	.27510	.07480	-.01160	.12520	-.00850	.00890
.599	6.452	-5.32540	.00000	421.54760	.38130	.08690	-.00720	.12320	-.00820	.00950
.599	8.512	-5.29620	.00000	421.67120	.48430	.10350	-.00230	.12000	-.00850	.01140
.599	10.627	-5.26330	.00000	421.91980	.59590	.12750	.00280	.11800	-.00930	.01420
.600	12.720	-5.22590	.00000	422.29190	.70840	.16320	.00760	.11550	-.00940	.01500
.599	14.896	-5.18230	.00000	421.79470	.79780	.22240	.01190	.12060	-.01090	.00710
.600	16.949	-5.13410	.00000	422.17140	.87820	.28890	.01470	.11730	-.01050	.00800
.600	17.793	-5.11050	.00000	422.66860	.92080	.31830	.01330	.11800	-.01090	.00670
	GRADIENT	.00913	.00000	-.04649	.04896	.00589	.00245	-.00094	-.00011	.00065

CA20 05 S2 ORBITER DATA (BGN025) (20 JAN 75)

REFERENCE DATA

SREF = 2690.0000 SQ.FT. XMRP = 1109.0000 IN.XO
LREF = 474.8100 IN. YMRP = .0000 IN.YO
BREF = 936.6800 IN. ZMRP = 375.0000 IN.ZO
SCALE = .0300

PARAMETRIC DATA

ELEVON = 5.000 AILRON = .000
BETAO = .000 PHI = .000
RUDDER = .000

RUN NO. 581/ 0 RN/L = 3.34 GRADIENT INTERVAL = .00/ 12.00

MACH	ALPHAO	BETAO	PHI	Q(PSF)	CL	CD	CLM	CY	CLN	CSL
.601	6.364	-.01500	.00000	421.06330	.36970	.07910	-.00320	.00510	.00008	-.00190
.600	8.475	-.01370	.00000	420.44320	.47830	.09570	.00050	.00440	.00020	-.00160
.600	10.577	-.01380	.00000	420.69030	.58460	.11920	.00720	.00390	.00050	-.00140
.599	12.691	-.01510	.00000	419.69190	.69980	.15630	.01380	.00250	.00150	-.00120
.599	14.815	-.01400	.00000	419.81990	.78520	.21530	.02010	.00490	.00040	-.00220
.600	16.906	-.01090	.00000	420.81630	.87470	.28450	.02050	.00350	.00040	-.00130
.600	17.617	-.01060	.00000	420.94060	.91420	.31190	.01850	.00340	.00040	-.00110
	GRADIENT	.00029	.00000	-.08870	.05101	.00952	.00247	-.00028	.00012	.00012

CA20 05 S2 ORBITER DATA (OCN026) (20 JAN 75)

REFERENCE DATA

SREF = 2690.0000 SQ.FT. XMRP = 1109.0000 IN.XO
LREF = 474.8100 IN. YMRP = .0000 IN.YO
BREF = 936.6800 IN. ZMRP = 375.0000 IN.ZO
SCALE = .0300

PARAMETRIC DATA

ELEVON = 5.000 AILRON = .000
BETAO = .000 PHI = .000
RUDDER = 15.000

RUN NO. 588/ 0 RN/L = 3.33 GRADIENT INTERVAL = .00/ 12.00

MACH	ALPHAO	BETAO	PHI	Q(PSF)	CL	CD	CLM	CY	CLN	CSL
.600	6.363	-.04610	.00000	422.10830	.36600	.09790	.00330	.04170	-.01510	.00510
.600	8.467	-.04770	.00000	421.98550	.47360	.11370	.00640	.04240	-.01540	.00460
.600	10.604	-.04370	.00000	421.98390	.58140	.13670	.01360	.04040	-.01520	.00470
.600	12.707	-.04320	.00000	421.73170	.69400	.17320	.01940	.03860	-.01440	.00410
.600	14.811	-.04360	.00000	421.48310	.77410	.23120	.02600	.04250	-.01600	.00150
.600	15.867	-.04410	.00000	422.22950	.82060	.26340	.02750	.04230	-.01580	.00110
.600	16.913	-.04100	.00000	422.35540	.86510	.29910	.02740	.04080	-.01580	.00190
	GRADIENT	.00057	.00000	-.02925	.05079	.00915	.00243	-.00031	-.00002	-.00009

CA20 06 S2 ORBITER DATA (BGN027) (20 JAN 75)

REFERENCE DATA

SREF = 2690.0000 SQ.FT. XMRP = 1109.0000 IN.XO
LREF = 474.8100 IN. YMRP = .0000 IN.YO
BREF = 936.6800 IN. ZMRP = 375.0000 IN.ZO
SCALE = .0300

PARAMETRIC DATA

ELEVON = 5.000 AILRON = .000
BETAO = .000 PHI = .000
RUDDER = .000

RUN NO. 562/ 0 RN/L = 3.31 GRADIENT INTERVAL = .00/ 12.00

MACH	ALPHAO	BETAO	PHI	Q(PSF)	CL	CD	CLM	CY	CLN	CSL
.601	6.360	-.01310	.00000	421.32300	.35840	.09250	.00200	.00460	-.00010	-.00200
.600	8.465	-.01180	.00000	420.33210	.46420	.10830	.00710	.00380	.00030	-.00210
.600	10.581	-.01050	.00000	420.32910	.57110	.13100	.01450	.00260	.00070	-.00150
.599	12.695	-.01090	.00000	419.70230	.68270	.16670	.02230	.00080	.00180	-.00120
.601	14.807	-.01040	.00000	421.19870	.76210	.22370	.03110	.00380	.00030	-.00210
.600	16.905	-.00910	.00000	420.07800	.84720	.28980	.03720	.00270	.00060	-.00140
.599	17.799	-.00630	.00000	419.82740	.88970	.32300	.03630	.00150	.00070	-.00100
	GRADIENT	.00062	.00000	-.23531	.05040	.00912	.00296	-.00047	.00019	.00012

ORIGINAL PAGE IS
OF POOR QUALITY

CA20 07 S2 ORBITER DATA (BGN028) (20 JAN 75)

REFERENCE DATA

SREF = 2690.0000 SQ.FT. XMRP = 1109.0000 IN.XO
LREF = 474.8100 IN. YMRP = .0000 IN.YO
BREF = 936.6800 IN. ZMRP = 375.0000 IN.ZO
SCALE = .0300

PARAMETRIC DATA

ELEVON = 5.000 AILRON = .000
BETAO = .000 PHI = .000
RUDDER = .000

RUN NO. 583/ 0 RN/L = 3.30 GRADIENT INTERVAL = .00/ 12.00

MACH	ALPHAO	BETAO	PHI	Q(PSF)	CL	CD	CLM	CY	CLN	CSL
.601	6.339	-.01310	.00000	421.70700	.35580	.09150	.00080	.00410	.00020	-.00180
.600	8.464	-.01150	.00000	420.71390	.46210	.10720	.00610	.00320	.00050	-.00190
.601	10.590	-.01060	.00000	421.57950	.57050	.12980	.01380	.00240	.00080	-.00130
.600	12.706	-.01040	.00000	421.07910	.68220	.16570	.02190	.00020	.00200	-.00110
.600	14.793	-.00940	.00000	420.21160	.76080	.22130	.03040	.00300	.00060	-.00220
.601	16.912	-.00500	.00000	421.45210	.84510	.28950	.03540	.00120	.00070	-.00130
.599	17.798	-.00540	.00000	419.83790	.88800	.32140	.03530	.00080	.00080	-.00080
	GRADIENT	.00059	.00000	-.02993	.05050	.00901	.00306	-.00040	.00014	.00012

CA20 08 S2 ORBITER DATA (BGN029) (20 JAN 75)

REFERENCE DATA

SREF = 2690.0000 SQ.FT. XMRP = 1109.0000 IN.XO
LREF = 474.8100 IN. YMRP = .0000 IN.YO
BREF = 936.6800 IN. ZMRP = 375.0000 IN.ZO
SCALE = .0300

PARAMETRIC DATA

ELEVON = 5.000 AILRON = .000
BETAO = .000 PHI = .000
RUDDER = .000

RUN NO. 584/ 0 RN/L = 3.30 GRADIENT INTERVAL = .00/ 12.00

MACH	ALPHAO	BETAO	PHI	Q(PSF)	CL	CD	CLM	CY	CLN	CSL
.600	6.321	-.00160	.00000	421.22070	.30140	.09910	.01970	.00070	.00020	-.00230
.600	8.437	-.00190	.00000	421.08850	.40440	.11260	.02490	.00080	.00020	-.00240
.600	10.548	-.00160	.00000	421.21600	.50980	.13220	.03300	-.00010	.00070	-.00170
.600	12.674	-.00020	.00000	420.72330	.61610	.16290	.04310	-.00260	.00180	-.00160
.601	14.794	-.00070	.00000	421.71960	.68800	.21380	.05530	.00100	.00010	-.00220
.599	15.422	-.00040	.00000	420.10150	.71210	.22870	.05900	.00040	.00040	-.00190
	GRADIENT	-.00000	.00000	-.00114	.04931	.00783	.00315	-.00019	.00012	.00014

DATE 01 DEC 75 TABULATED SOURCE DATA - CA20

CA20 08 S2 ORBITER DATA (BGN030) (20 JAN 75)

REFERENCE DATA

SREF = 2690.0000 SQ.FT. XMRP = 1109.0000 IN.XO
LREF = 474.8100 IN. YMRP = .0000 IN.YO
BREF = 936.6800 IN. ZMRP = 375.0000 IN.ZO
SCALE = .0300

PARAMETRIC DATA

ELEVON = 5.000 AILRON = .000
BETAO = .000 PHI = .000
RUDDER = .000

RUN NO. 585/ 0 RN/L = 3.33 GRADIENT INTERVAL = .00/ 12.00

MACH	ALPHAO	BETAO	PHI	Q(PSF)	CL	CD	CLM	CY	CLN	CSL
.599	6.334	-.01710	.00000	420.05510	.30910	.09730	.01770	.00600	.00000	-.00240
.601	8.442	-.01990	.00000	421.91930	.40900	.11080	.02380	.00620	.00040	-.00230
.601	10.560	-.01680	.00000	421.54310	.51310	.13080	.03270	.00510	.00050	-.00170
.600	12.684	-.02050	.00000	420.42290	.61740	.15930	.04280	.00500	.00130	-.00200
.601	14.780	-.02090	.00000	421.79180	.68910	.21110	.05420	.00800	.00000	-.00260
.600	16.868	-.01380	.00000	421.42350	.76270	.26580	.06380	.00760	.00000	-.00270
.599	17.295	-.01830	.00000	420.43040	.79330	.22970	.06390	.00720	.00000	-.00240
	GRADIENT	.00007	.00000	.35164	.04827	.00793	.00355	-.00021	.00012	.00017

CA20 08 S2 ORBITER DATA (BGN031) (20 JAN 75)

REFERENCE DATA

SREF = 2690.0000 SQ.FT. XMRP = 1109.0000 IN.XO
LREF = 474.8100 IN. YMRP = .0000 IN.YO
BREF = 936.6800 IN. ZMRP = 375.0000 IN.ZO
SCALE = .0300

PARAMETRIC DATA

ELEVON = 5.000 AILRON = .000
BETAO = .000 PHI = .000
RUDDER = .000

RUN NO. 586/ 0 RN/L = 3.29 GRADIENT INTERVAL = .00/ 12.00

MACH	ALPHAO	BETAO	PHI	Q(PSF)	CL	CD	CLM	CY	CLN	CSL
.601	6.325	-.02070	.00000	421.68170	.32010	-.02300	.01490	.00690	.00010	-.00230
.600	8.434	-.01920	.00000	421.55890	.41790	.03900	.02240	.00560	.00060	-.00230
.600	10.558	-.01910	.00000	420.68650	.52510	.06460	.03010	.00580	.00050	-.00180
.600	12.663	-.02000	.00000	421.30540	.62700	.11810	.04150	.00450	.00150	-.00210
.600	14.780	-.02290	.00000	421.55570	.70460	.15270	.05250	.00890	-.00010	-.00300
.600	16.870	-.02310	.00000	421.18420	.79290	.16340	.06130	.00920	.00000	-.00290
.599	17.301	-.02200	.00000	420.43340	.81070	.17050	.06310	.00850	-.00010	-.00230
	GRADIENT	.00038	.00000	-.23528	.04843	.02068	.00359	-.00026	.00009	.00012

CA20 09 S2 ORBITER DATA (BGN032) (20 JAN 75)

REFERENCE DATA

SREF = 2690.0000 SQ.FT. XMRP = 1109.0000 IN.XO
LREF = 474.8100 IN. YMRP = .0000 IN.YO
BREF = 936.6800 IN. ZMRP = 375.0000 IN.ZO
SCALE = .0300

PARAMETRIC DATA

ELEVON = 5.000 AILRON = .000
BETAO = .000 PHI = .000
RUDDER = .000

RUN NO. 587/ 0 RN/L = 3.31 GRADIENT INTERVAL = .00/ 12.00

MACH	ALPHAO	BETAO	PHI	Q(PSF)	CL	CD	CLM	CY	CLN	CSL
.599	-16.828	.03110	.00000	420.33980	-.74310	.27770	-.06580	-.00870	-.00070	.00050
.600	-14.701	.02560	.00000	421.22130	-.63550	.22680	-.05500	-.00650	-.00070	.00120
.601	-12.593	.02050	.00000	422.46230	-.54740	.18530	-.04290	-.00510	-.00070	.00080
.601	-10.497	.01800	.00000	422.21680	-.45410	.15010	-.03450	-.00370	-.00110	-.00020
.599	-8.391	.01580	.00000	420.71800	-.35640	.12100	-.02710	-.00350	-.00100	-.00110
.600	-6.286	.01380	.00000	421.46910	-.25770	.10030	-.02090	-.00440	-.00020	-.00180
.601	.017	.00460	.00000	422.33540	.02660	.08200	-.00040	-.00290	.00080	-.00180
.600	6.346	-.02180	.00000	421.21230	.30300	.09760	.02150	.00540	.00080	-.00220
.600	8.446	-.02400	.00000	421.21380	.40740	.11160	.02730	.00620	.00110	-.00200
.600	10.563	-.02640	.00000	421.58250	.51140	.13120	.03570	.00660	.00120	-.00160
.601	12.668	-.02470	.00000	422.07990	.61570	.16160	.04760	.00460	.00210	-.00150
.601	14.789	-.02740	.00000	422.32850	.68800	.21280	.05930	.00840	.00090	-.00260
.601	16.884	-.02510	.00000	422.07990	.76330	.26930	.07010	.00670	.00170	-.00290
.600	17.935	-.02380	.00000	421.71470	.80210	.30190	.07250	.00520	.00210	-.00210
	GRADIENT	-.00307	.00000	-.08908	.04574	.00434	.00345	.00097	.00004	.00001

CA20 09 S2 ORBITER DATA (BGN033) (20 JAN 75)

REFERENCE DATA

SREF = 2690.0000 SQ.FT. XMRP = 1109.0000 IN.XO
LREF = 474.8100 IN. YMRP = .0000 IN.YO
BREF = 936.6800 IN. ZMRP = 375.0000 IN.ZO
SCALE = .0300

PARAMETRIC DATA

ELEVON = 5.000 AILRON = .000
BETAO = -5.000 PHI = .000

RUN NO. 599/ 0 RN/L = 3.34 GRADIENT INTERVAL = .00/ 12.00

MACH	ALPHAO	BETAO	PHI	Q(PSF)	CL	CD	CLM	CY	CLN	CSL
.601	.053	-5.28640	.00000	423.17540	.08560	.05920	-.02460	.06540	.01260	-.00570
.599	4.278	-5.27590	.00000	421.93180	.28370	.07020	-.01380	.06710	.01200	-.00140
.600	6.376	-5.26330	.00000	422.05390	.38830	.08320	-.00920	.06820	.01170	.00040
.600	8.549	-5.23780	.00000	422.05240	.49760	.10190	-.00360	.06800	.01080	.00330
.599	10.609	-5.20930	.00000	421.80370	.60520	.12710	.00130	.06740	.01020	.00670
.600	12.776	-5.17110	.00000	422.17740	.72170	.16560	.00660	.06530	.01020	.00790
.600	14.839	-5.13300	.00000	422.42980	.80410	.22400	.01050	.06980	.00990	.00010
.599	17.052	-5.08130	.00000	421.92730	.88970	.29630	.01240	.06680	.01070	.00220
.601	17.477	-5.07190	.00000	423.17230	.91230	.31090	.01230	.06770	.01040	.00130
	GRADIENT	.00716	.00000	-.11473	.04918	.00628	.00245	.00021	-.00023	.00115

CA20 747/1 01 SI ORBITER DATA (BGN037) (20 JAN 75)

REFERENCE DATA

SREF = 2690.0000 SQ.FT. XMRP = 1109.0000 IN.XO
LREF = 474.8100 IN. YMRP = .0000 IN.YO
BREF = 936.6800 IN. ZMRP = 375.0000 IN.ZO
SCALE = .0300

PARAMETRIC DATA

ALPHAC = 4.000 BETAC = .000
ELV-IB = .000 ELV-OB = 3.000
ELEVON = 5.000 BETAO = .000
PHI = .000 DX = .000
DY = .000 DZ = 7.500

RUN NO. 851/ 0 RN/L = 3.29 GRADIENT INTERVAL = -1.00/ 4.00

MACH	ALPHAO	BETAO	PHI	Q(PSF)	CL	CD	CLM	CY	CLN	CSL
.599	6.201	.01190	.00000	421.10090	.15940	.04550	.02290	-.00150	-.00100	-.00230
.599	8.330	.01010	.00000	420.99030	.28820	.05910	.03190	-.00180	-.00030	-.00280
.601	10.305	.00780	.00000	422.72200	.41830	.07930	.04190	-.00150	-.00010	-.00260
.600	12.627	.00580	.00000	422.47330	.55190	.10930	.05140	-.00260	.00090	-.00210
.601	14.759	.00340	.00000	422.72350	.67060	.15820	.05570	-.00200	.00080	-.00130
.601	16.873	.00230	.00000	422.72670	.78380	.22070	.05490	.00030	.00040	-.00320
.600	18.983	.00230	.00000	421.60260	.90800	.29910	.04170	-.00030	.00050	-.00200
	GRADIENT	.00000	.00000	.00000	.00000	.00000	.00000	.00000	.00000	.00000

CA20 747/1 01 SI ORBITER DATA (BGN038) (03 SEP 75)

REFERENCE DATA

SREF = 2690.0000 SQ.FT. XMRP = 1109.0000 IN.XO
LREF = 474.8100 IN. YMRP = .0000 IN.YO
BREF = 936.6800 IN. ZMRP = 375.0000 IN.ZO
SCALE = .0300

PARAMETRIC DATA

ALPHAC = 4.000 ELV-IB = .000
ELV-OB = 3.000 ELEVON = 5.000
ALPHAO = 10.000 BETAO = .000
PHI = .000 DX = .000
DY = .000 DZ = 7.500

RUN NO. 850/ 0 RN/L = 3.33 GRADIENT INTERVAL = -5.00/ 5.00

MACH	BETA	ALPHAH	ALPHAO	DY	DZ	CL	CD	CLM	CY	CLN	CSL
.600	-9.976	5.80870	10.41260	2.12960	6.26980	.40870	.07860	.03890	-.01600	.00420	.00560
.600	-6.964	5.81360	10.41330	1.49020	6.26810	.41430	.07970	.03820	-.01190	.00240	.00340
.599	-4.978	5.81900	10.41450	1.05520	6.27000	.41530	.07950	.03880	-.00890	.00140	.00150
.600	-3.007	5.82670	10.41830	.64080	6.29770	.41570	.07930	.04010	-.00610	.00070	-.00020
.600	-1.992	5.82550	10.41950	.42100	6.27660	.41570	.07940	.04050	-.00460	.00050	-.00110
.600	-1.008	5.82610	10.42220	.20930	6.31260	.41520	.07940	.04090	-.00300	.00030	-.00190
.601	.007	5.82360	10.41790	-.00900	6.24410	.41730	.07310	.04010	-.00120	-.00010	-.00280
.600	1.014	5.82620	10.41990	-.22960	6.27750	.41600	.07930	.04060	-.00020	-.00020	-.00350
.600	2.013	5.82370	10.42220	-.44470	6.28800	.41490	.07960	.04140	.00140	-.00050	-.00430
.600	2.989	5.82490	10.42000	-.65700	6.27060	.41360	.07970	.04230	.00270	-.00070	-.00510
.600	4.984	5.81950	10.41820	-1.08590	6.26940	.41320	.07960	.04130	.00560	-.00130	-.00680
.601	9.990	5.81220	10.41490	-2.15500	6.26180	.40500	.07860	.04210	.01180	-.00380	-.01220
	GRADIENT	-.00008	.00034	-.21609	-.00125	-.00023	.00003	.00026	.00146	-.00026	-.00082

CA20 747/1 01 S1 ORBITER DATA (BGN038) (03 SEP 75)

REFERENCE DATA

SREF = 2690.0000 SQ.FT. XMRP = 1109.0000 IN.XO
LREF = 474.8100 IN. YMRP = .0000 IN.YO
BREF = 936.6800 IN. ZMRP = 375.0000 IN.ZO
SCALE = .0300

PARAMETRIC DATA

ALPHAC =	4.000	ELV-IB =	.000
ELV-OB =	3.000	ELEVON =	5.000
ALPHAO =	10.000	BETAO =	.000
PHI =	.000	DX =	.000
DY =	10.000	DZ =	7.500

RUN NO. 848/ 0 RN/L = 3.35 GRADIENT INTERVAL = -5.00/ 5.00

MACH	BETA	ALPHAW	ALPHAO	DY	DZ	CL	CD	CLM	CY	CLN	CSL
.599	-9.977	5.80370	10.40080	11.96970	6.35930	.41740	.07970	.03430	-.01370	.00050	-.00068
.599	-6.964	5.81260	10.41720	11.42280	6.42840	.43050	.08020	.03090	-.00850	-.00020	-.00250
.600	-5.008	5.81530	10.42300	11.04220	6.43340	.43060	.08050	.03370	-.00570	-.00050	-.00370
.599	-3.000	5.81870	10.42860	10.63430	6.45000	.43190	.08020	.03540	-.00300	-.00100	-.00500
.600	-2.007	5.81990	10.42910	10.42340	6.44280	.43350	.08000	.03550	-.00220	-.00120	-.00570
.599	-1.006	5.82050	10.43390	10.20700	6.42870	.43120	.08000	.03870	-.00150	-.00130	-.00640
.600	.025	5.82110	10.43310	9.99250	6.43900	.43150	.07940	.03910	-.00050	-.00160	-.00710
.600	1.019	5.82140	10.43540	9.76020	6.45990	.43040	.07910	.04090	.00000	-.00170	-.00780
.600	2.013	5.82190	10.43740	9.53270	6.43400	.42900	.07910	.04310	.00010	-.00180	-.00840
.599	2.991	5.82180	10.43940	9.30670	6.43310	.42870	.07900	.04460	.00050	-.00210	-.00920
.599	5.113	5.82040	10.44710	8.80200	6.44050	.42510	.07920	.04950	.00030	-.00270	-.01100
.600	9.990	5.81320	10.47550	7.59500	6.46930	.41840	.08050	.06290	-.00210	-.00440	-.01630
	GRADIENT	.00051	.00180	-.22151	-.00131	-.00069	-.00023	.00160	.00059	-.00017	-.00069

CA20 747/0 01 S1 AT38 AT39 ORBITER DATA (BGN040) (20 JAN 75)

REFERENCE DATA

SREF = 2690.0000 SQ.FT. XMRP = 1109.0000 IN.XO
LREF = 474.8100 IN. YMRP = .0000 IN.YO
BREF = 936.6800 IN. ZMRP = 375.0000 IN.ZO
SCALE = .0300

PARAMETRIC DATA

ALPHAC =	.000	BETAC =	.000
ELV-IB =	.000	ELV-OB =	3.000
ELEVON =	5.000	MACH =	.600
BETAO =	.000	PHI =	.000
DX =	.000	DY =	.000

RUN NO. 619/ 0 RN/L = 3.37 GRADIENT INTERVAL = -1.00/ 4.00

ALPHAO	DZ	MACH	DX	DY	BETAO	PHI	ALPHAW	BETA	CL	CD	CLM
8.543	1.907	.59950	3.60120	-.03230	.01640	.00000	1.94510	.05340	.37970	.06770	.04330
8.536	4.848	.60050	3.59700	-.02820	.01400	.00000	1.94340	.05390	.37990	.06620	.03580
8.531	9.288	.59950	3.59490	-.02610	.01230	.00000	1.94340	.05390	.38310	.06690	.02870
8.529	17.091	.59980	3.59790	-.02240	.00940	.00000	1.92880	.06010	.39120	.06870	.02160
8.525	31.807	.59930	3.60900	-.01480	.00500	.00000	1.91450	.05980	.40350	.07140	.01290
8.523	36.614	.60000	3.61500	-.01210	.00510	.00000	1.91010	.05200	.40620	.07230	.01120
	GRADIENT	.00000	.00000	.00000	.00000	.00000	.00000	.00000	.00000	.00000	.00000

CA20 747/0 01 S1 AT38 AT39 ORBITER DATA (BGN041) (20 JAN 75)

REFERENCE DATA

SREF = 2690.0000 SQ.FT. XMRP = 1109.0000 IN.XO
LREF = 474.8100 IN. YMRP = .0000 IN.YO
BREF = 936.6800 IN. ZMRP = 375.0000 IN.ZO
SCALE = .0300

PARAMETRIC DATA

ALPHAC = 4.000 BETAC = .000
ELV-IB = .000 ELV-OB = 3.000
ELEVON = 5.000 MACH = .600
BETAO = .000 PHI = .000
DX = .000 DY = .000

RUN NO. 621/ 0 RN/L = 3.27 GRADIENT INTERVAL = -1.00/ 4.00

ALPHAO	DZ	MACH	DX	DY	BETAO	PHI	ALPHAH	BETA	CL	CD	CLM
12.656	.965	.59940	-.06780	-.01860	.00680	.00000	5.83310	.06160	.54270	.07170	.05760
12.650	4.780	.59960	-.33520	-.01570	.00350	.00000	5.82950	.06890	.54090	.07090	.05520
12.648	8.551	.59960	-.59320	-.01060	.00330	.00000	5.82270	.04540	.54940	.07270	.04930
12.651	15.655	.60020	-1.07500	-.00980	.00120	.00000	5.81040	.05270	.56790	.07610	.04040
12.672	30.855	.60070	-2.11910	-.00380	-.00410	.00000	5.79490	.06010	.59300	.08330	.03260
12.678	45.578	.60050	-3.13100	-.00250	-.00489	.00000	5.78510	.06010	.61260	.08720	.02530
12.678	60.229	.59990	-4.14410	.01270	-.01300	.00000	5.77850	.05240	.62150	.08930	.02090
	GRADIENT	.00000	.00000	.00000	.00000	.00000	.00000	.00000	.00000	.00000	.00000

CA20 747/0 01 S1 AT38 AT39 ORBITER DATA (BGN042) (20 JAN 75)

REFERENCE DATA

SREF = 2690.0000 SQ.FT. XMRP = 1109.0000 IN.XO
LREF = 474.8100 IN. YMRP = .0000 IN.YO
BREF = 936.6800 IN. ZMRP = 375.0000 IN.ZO
SCALE = .0300

PARAMETRIC DATA

ALPHAC = 8.000 BETAC = .000
ELV-IB = .000 ELV-OB = 3.000
ELEVON = 5.000 MACH = .600
BETAO = .000 PHI = .000
DX = .000 DY = .000

RUN NO. 620/ 0 RN/L = 3.33 GRADIENT INTERVAL = -1.00/ 4.00

ALPHAO	DZ	MACH	DX	DY	BETAO	PHI	ALPHAH	BETA	CL	CD	CLM
16.829	3.116	.59950	-2.43120	-.02120	.00530	.00000	9.76940	.03940	.66090	.13660	.08170
16.828	8.039	.59960	-2.83530	-.01980	.00420	.00000	9.76310	.05540	.66860	.14020	.07650
16.849	18.388	.60060	-4.53450	-.00890	.00070	.00000	9.74570	.06220	.71290	.15840	.06130
16.864	32.988	.60080	-6.55190	.00410	-.00220	.00000	9.73110	.06210	.75690	.17600	.04550
16.870	48.151	.59930	-8.66310	.01220	-.00550	.00000	9.72170	.05490	.78480	.18680	.03530
16.865	63.071	.59990	-10.74270	.02870	-.01480	.00000	9.71610	.06290	.80370	.19270	.02730
	GRADIENT	.00000	.00000	.00000	.00000	.00000	.00000	.00000	.00000	.00000	.00000

ORIGINAL PAGE IS
OF POOR QUALITY

CA20 747/0 01 S1 AT38 AT39 ORBITER DATA (BGN043) (20 JAN 75)

REFERENCE DATA

SREF = 2690.0000 SQ.FT. XMRP = 1109.0000 IN.XO
LREF = 474.8100 IN. YMRP = .0000 IN.YO
BREF = 936.6800 IN. ZMRP = 375.0000 IN.ZO
SCALE = .0300

PARAMETRIC DATA

ALPHAC = 4.000 BETAC = -5.000
ELV-IB = .000 ELV-OB = 3.000
ELEVON = 5.000 MACH = .600
BETAO = -5.000 PHI = .000
DX = .000 DY = .000

RUN NO. 622/ 0 RN/L = 3.34 GRADIENT INTERVAL = -1.00/ 4.00

ALPHAO	DZ	MACH	DX	DY	BETAO	PHI	ALPHAW	BETA	CL	CD	CLM
12.644	1.130	.59920	-.11230	1.40980	-5.21950	.00000	5.83690	-4.98500	.56770	.07460	.03720
12.623	4.337	.59930	-.33720	1.40240	-5.22240	.00000	5.82570	-4.97960	.56200	.07300	.02990
12.617	8.510	.59940	-.62560	1.42200	-5.22820	.00000	5.82070	-4.98110	.57430	.07530	.01810
12.618	16.134	.59970	-1.14280	1.44840	-5.23970	.00000	5.80320	-4.98220	.59220	.07950	.00990
12.630	31.004	.59900	-2.16520	1.47370	-5.24900	.00000	5.79220	-4.98470	.62070	.08660	.00020
12.635	46.251	.59950	-3.21640	1.48210	-5.25230	.00000	5.78510	-4.97510	.63910	.09120	-.00610
12.636	60.055	.59910	-4.17150	1.48950	-5.25550	.00000	5.77980	-4.98250	.64820	.09370	-.01020
	GRADIENT	.00000	.00000	.00000	.00000	.00000	.00000	.00000	.00000	.00000	.00000

CA20 747/0 02 S1 AT38 AT39 ORBITER DATA (BGN044) (20 JAN 75)

REFERENCE DATA

SREF = 2690.0000 SQ.FT. XMRP = 1109.0000 IN.XO
LREF = 474.8100 IN. YMRP = .0000 IN.YO
BREF = 936.6800 IN. ZMRP = 375.0000 IN.ZO
SCALE = .0300

PARAMETRIC DATA

ALPHAC = 4.000 BETAC = -5.000
ELV-IB = .000 ELV-OB = 3.000
ELEVON = 5.000 MACH = .600
BETAO = -5.000 PHI = .000
DX = .000 DY = .000

RUN NO. 623/ 0 RN/L = 3.33 GRADIENT INTERVAL = -1.00/ 4.00

ALPHAO	DZ	MACH	DX	DY	BETAO	PHI	ALPHAW	BETA	CL	CD	CLM
12.689	1.078	.60000	-.11690	1.45730	-5.21700	.00000	5.83930	-4.98900	.55740	.12680	.04700
12.667	4.227	.60030	-.34250	1.45710	-5.21810	.00000	5.83370	-4.99230	.54430	.12420	.04700
12.664	8.517	.60080	-.63820	1.47060	-5.22580	.00000	5.82500	-4.99420	.54990	.12630	.04340
12.671	16.093	.60020	-1.16010	1.48740	-5.23480	.00000	5.81380	-4.97680	.56430	.13070	.03858
12.690	31.112	.59970	-2.19170	1.51140	-5.24470	.00000	5.79950	-4.97500	.59160	.13800	.03020
12.697	46.160	.60010	-3.22910	1.51770	-5.24610	.00000	5.78840	-4.97470	.60870	.14280	.02440
12.700	60.200	.59940	-4.20270	1.52760	-5.24940	.00000	5.78270	-4.98230	.61720	.14520	.02080
	GRADIENT	.00000	.00000	.00000	.00000	.00000	.00000	.00000	.00000	.00000	.00000

CA20 747/1 01 S1 AT38 AT39 ORBITER DATA (BGN045) (20 JAN 75)

REFERENCE DATA

SREF =	2690.0000 SQ.FT.	XMRP =	1109.0000 IN.XO		
LREF =	474.8100 IN.	YMRP =	.0000 IN.YO		
BREF =	936.6800 IN.	ZMRP =	375.0000 IN.ZO		
SCALE =	.0300				

PARAMETRIC DATA

ALPHAC =	.000	BETAC =	.000
ELV-IB =	.000	ELV-OB =	3.000
ELEVON =	5.000	MACH =	.600
BETAO =	.000	PHI =	.000
DX =	.000	DY =	.000

RUN NO. 627/ 0 RN/L = 3.23 GRADIENT INTERVAL = -1.00/ 4.00

ALPHAO	DZ	MACH	DX	DY	BETAO	PHI	ALPHAW	BETA	CL	CD	CLM
8.542	.714	.59990	3.63520	-.02480	.01080	.00000	2.00160	.04680	.41400	.07120	.04240
8.528	3.632	.59920	3.63100	-.02090	.00950	.00000	2.00010	.05430	.40620	.06990	.03900
8.518	8.066	.59980	3.63410	-.01440	.00730	.00000	1.99340	.04570	.41040	.07050	.03040
8.507	15.605	.59930	3.63780	-.01330	.00490	.00000	1.98550	.05310	.41850	.07140	.02050
8.501	30.694	.59970	3.64610	-.00330	-.00020	.00000	1.97170	.04490	.42660	.07380	.01220
8.499	36.458	.60080	3.64900	-.00250	-.00040	.00000	1.96870	.04470	.42940	.07410	.00900
	GRADIENT	-.00024	-.00141	.00131	-.00044	.00000	-.00050	.00252	-.00262	-.00044	-.00114

CA20 747/1 01 S1 AT38 AT39 ORBITER DATA (BGN046) (20 JAN 75)

REFERENCE DATA

SREF =	2690.0000 SQ.FT.	XMRP =	1109.0000 IN.XO		
LREF =	474.8100 IN.	YMRP =	.0000 IN.YO		
BREF =	936.6800 IN.	ZMRP =	375.0000 IN.ZO		
SCALE =	.0300				

PARAMETRIC DATA

ALPHAC =	4.000	BETAC =	.000
ELV-IB =	.000	ELV-OB =	3.000
ELEVON =	5.000	MACH =	.600
BETAO =	.000	PHI =	.000
DX =	.000	DY =	.000

RUN NO. 625/ 0 RN/L = 3.33 GRADIENT INTERVAL = -1.00/ 4.00

ALPHAO	DZ	MACH	DX	DY	BETAO	PHI	ALPHAW	BETA	CL	CD	CLM
12 932	1.832	.60070	-.18360	-.02470	.00710	.00000	5.90010	.05470	.56560	.11360	.05010
12.928	4.902	.60050	-.39970	-.02410	.00510	.00000	5.89670	.06970	.56460	.11270	.05690
12.919	9.333	.59970	-.70450	-.01890	.00490	.00000	5.89180	.04620	.57640	.11400	.04760
12.922	16.287	.60010	-1.18040	-.01810	.00320	.00000	5.88020	.05340	.59180	.11720	.03950
12.928	31.736	.59970	-2.24670	-.00760	-.00230	.00000	5.86670	.04510	.61610	.12300	.03010
12.931	46.536	.60010	-3.26590	-.00890	-.00240	.00000	5.85220	.06070	.62940	.12640	.02410
12.938	61.653	.59990	-4.32120	.00250	-.00900	.00000	5.84840	.05300	.63610	.12820	.02010
	GRADIENT	.00000	.00000	.00000	.00000	.00000	.00000	.00000	.00000	.00000	.00000

CA20 747/1 01 SI AT38 AT39 ORBITER DATA (BGN047) (20 JAN 75)

REFERENCE DATA

SREF = 2690.0000 SQ.FT. XMRP = 1109.0000 IN.XO
LREF = 474.8100 IN. YMRP = .0000 IN.YO
BREF = 936.6800 IN. ZMRP = 375.0000 IN.ZO
SCALE = .0300

PARAMETRIC DATA

ALPHAC = 8.000 BETAC = .000
ELV-IB = .000 ELV-OB = 3.000
ELEVON = 5.000 MACH = .600
BETAO = .000 PHI = .000
DX = .000 DY = .000

RUN NO. 626/ 0 RN/L = 3.25 GRADIENT INTERVAL = -1.00/ 4.00

ALPHAO	DZ	MACH	DX	DY	BETAO	PHI	ALPHAH	BETA	CL	CD	CLH
16.841	.924	.60020	-2.09540	-.01670	.00380	.00000	9.78520	.04000	.67480	.17830	.07680
16.843	3.722	.60080	-2.48890	-.01030	.00240	.00000	9.78090	.03220	.67080	.17910	.08070
16.845	8.201	.60030	-3.10370	-.00870	.00200	.00000	9.77510	.04060	.68980	.18490	.07200
16.850	15.692	.59940	-4.13510	-.00210	-.00030	.00000	9.76470	.04690	.71670	.19520	.06060
16.865	30.700	.59980	-6.20900	.00960	-.00430	.00000	9.74940	.04650	.75770	.21230	.04590
16.875	45.718	.59990	-8.29310	.01440	-.00560	.00000	9.73700	.04670	.78530	.22310	.03560
16.891	61.155	.59980	-10.44360	.02570	-.01250	.00000	9.72920	.05480	.80140	.22930	.02880
16.891	67.887	.59990	-11.37640	.03360	-.01550	.00000	9.72220	.04720	.80600	.23090	.02620
16.891	75.245	.60070	-12.40620	.03680	-.01600	.00000	9.72200	.04730	.81170	.23240	.02160
	GRADIENT	.00021	-.14064	.00229	-.00050	.00000	-.00154	-.00279	-.00143	.00029	.00139

CA20 747/1 01 SI AT38 AT39 ORBITER DATA (BGN048) (20 JAN 75)

REFERENCE DATA

SREF = 2690.0000 SQ.FT. XMRP = 1109.0000 IN.XO
LREF = 474.8100 IN. YMRP = .0000 IN.YO
BREF = 936.6800 IN. ZMRP = 375.0000 IN.ZO
SCALE = .0300

PARAMETRIC DATA

ALPHAC = 4.000 BETAC = -5.000
ELV-IB = .000 ELV-OB = 3.000
ELEVON = 5.000 MACH = .600
BETAO = -5.000 PHI = .000
DX = .000 DY = .000

RUN NO. 624/ 0 RN/L = 3.34 GRADIENT INTERVAL = -1.00/ 4.00

ALPHAO	DZ	MACH	DX	DY	BETAO	PHI	ALPHAH	BETA	CL	CD	CLH
12.701	.950	.60050	-.09170	1.42280	-5.22730	.00000	5.89270	-4.97770	.59350	.10490	.03650
12.684	4.036	.60000	-.31050	1.41650	-5.23070	.00000	5.88430	-4.97960	.58820	.10320	.03030
12.674	8.306	.59970	-.60550	1.43390	-5.23560	.00000	5.88040	-4.97320	.60140	.10530	.01720
12.674	15.805	.59980	-1.11840	1.46120	-5.24530	.00000	5.86640	-4.98130	.61790	.10880	.00840
12.678	30.896	.59900	-2.16020	1.48350	-5.25590	.00000	5.85530	-4.96770	.64260	.11470	-.00190
12.680	45.974	.59940	-3.19910	1.49390	-5.25890	.00000	5.84400	-4.97330	.65630	.11830	-.00790
12.692	60.286	.60030	-4.18950	1.50010	-5.26240	.00000	5.83610	-4.97300	.66350	.12040	-.01180
	GRADIENT	.00000	.00000	.00000	.00000	.00000	.00000	.00000	.00000	.00000	.00000

CA20 747/1 01 SI ORBITER DATA (BG1049) (23 AUG 75)

REFERENCE DATA

SREF = 2690.0000 SQ.FT. XMRP = 1109.0000 IN.XO
LREF = 474.8100 IN. YMRP = .0000 IN.YO
BREF = 936.6900 IN. ZMRP = 375.0000 IN.ZO
SCALE = .0300

PARAMETRIC DATA

ALPHAC = .000 DETAC = .000
ELV-IB = .000 ELV-OB = 3.000
ELEVON = 5.000 MACH = .600
BETAO = .000 PHI = .000
DX = .000 DY = .000

RUN NO. 631/ 0 RN/L = 3.24 GRADIENT INTERVAL = -1.00/ 4.00

ALPHAO	DZ	MACH	DX	DY	BETAO	PHI	ALPHAW	BETA	CL	CD	CLM
6.312	-1.419	.59920	5.29790	-.02660	.01260	.00000	1.98210	.05430	.25940	.05730	.05920
6.292	1.466	.59920	5.30150	-.02450	.01180	.00000	1.98020	.06190	.27120	.05560	.04120
6.279	6.074	.59910	5.30320	-.01630	.00880	.00000	1.97970	.04600	.28070	.05540	.02890
6.271	13.645	.59920	5.30920	-.01460	.00610	.00000	1.97080	.05290	.29270	.05580	.01780
6.270	16.388	.59950	5.30430	-.01130	.00540	00000	1.97780	.04510	.29680	.05610	.01510
6.269	23.904	.60010	5.31460	-.00590	.00200	.00000	1.96400	.04490	.30270	.05750	.01120
	GRADIENT	.00000	.00000	.00000	.00000	.00000	.00000	.00000	.00000	.00000	.00000

RUN NO. 628/ 0 RN/L = 3.29 GRADIENT INTERVAL = -1.00/ 4.00

ALPHAO	DZ	MACH	DX	DY	BETAO	PHI	ALPHAW	BETA	CL	CD	CLM
10.637	1.272	.59950	2.52450	-.01930	.00730	.00000	2.01030	.04640	.52510	.09660	.07030
10.614	3.983	.59910	2.52480	-.01980	.00740	.00000	2.00740	.05410	.52970	.09410	.05540
10.601	6.941	.59970	2.52560	-.01370	.00630	.00000	2.00440	.03840	.53190	.09330	.04600
10.592	9.629	.59960	2.52630	-.01580	.00590	.00000	2.00010	.04560	.53360	.09320	.04030
10.583	15.194	.60070	2.52960	-.01470	.00410	.00000	1.99100	.05300	.53820	.09360	.03170
10.585	20.698	.60030	2.53050	-.01350	.00330	.00000	1.97990	.05250	.54170	.09440	.02570
10.582	26.325	.60090	2.53340	-.00670	.00030	.00000	1.97440	.04490	.54350	.09490	.02230
10.566	31.999	.59990	2.53780	-.00630	-.00040	.00000	1.97230	.05230	.54540	.09500	.01860
10.560	37.416	.59910	2.53980	-.00650	.00000	.00000	1.96870	.05230	.54590	.09510	.01650
10.561	42.935	.60070	2.54520	-.00450	-.00060	.00000	1.96310	.05230	.54780	.09560	.01410
10.566	48.056	.59910	2.53990	-.00120	-.00220	.00000	1.96090	.04440	.54580	.09600	.01370
	GRADIENT	-.00015	.00011	-.00018	.00004	.00000	-.00107	.00284	.00170	-.00092	-.00550

RUN NO. 630/ 0 RN/L = 3.25 GRADIENT INTERVAL = -1.00/ 4.00

ALPHAO	DZ	MACH	DX	DY	BETAO	PHI	ALPHAW	BETA	CL	CD	CLM
14.838	3.701	.59910	1.51970	.00250	.00170	.00000	2.03660	.03910	.77860	.19540	.05918
14.820	6.608	.59920	1.51440	.00350	.00140	.00000	2.03470	.04660	.77330	.19090	.05068
14.798	11.326	.60080	1.51090	.00280	.00070	.00000	2.02900	.05400	.76820	.18740	.04148
14.777	18.752	.59910	1.50530	.00610	-.00130	.00000	2.01470	.04590	.76230	.18530	.03230
14.759	33.074	.59940	1.50510	.01100	-.00330	.00000	1.99380	.04490	.75870	.18500	.02408
14.751	48.459	.60030	1.51130	.01550	-.00640	.00000	1.97740	.04440	.75800	.18390	.01248
14.740	63.690	.60090	1.51010	.02740	-.01460	.00000	1.97150	.04430	.75510	.18210	.01529
	GRADIENT	.00000	.00000	.00000	.00000	.00000	.00000	.00000	.00000	.00000	.00000

ORIGINAL PAGE IS
OF POOR QUALITY

CA20 747/1 01 SI ORBITER DATA (BGN050) (29 AUG 75)

REFERENCE DATA

SREF = 2690.0000 SQ.FT. XMRP = 1109.0000 IN.XO
LREF = 474.8100 IN. YMRP = .0000 IN.YO
BREF = 936.6800 IN. ZMRP = 375.0000 IN.ZO
SCALE = .0300

PARAMETRIC DATA

ALPHAC = .000 BETAC = .000
ELV-IB = .000 ELV-OB = 3.000
ELEVON = 5.000 MACH = .600
BETAO = .000 PHI = .000
DX = 10.000 DY = .000

RUN NO. 638/ 0 RN/L = 3.25 GRADIENT INTERVAL = -1.00/ 4.00

ALPHAO	DZ	MACH	DX	DY	BETAO	PHI	ALPHAW	BETA	CL	CD	CLM
6.250	.172	.60020	15.27190	-.03320	.01450	.00000	1.97000	.05470	.24800	.05180	.03638
6.243	3.541	.59960	15.27150	-.02910	.01190	.00000	1.97180	.05450	.25930	.05140	.02480
6.236	7.711	.59990	15.27720	-.02610	.01060	.00000	1.95950	.05360	.26970	.05140	.01650
6.238	15.213	.60070	15.28380	-.02330	.00880	.00000	1.96200	.05350	.28060	.05340	.01160
6.237	18.581	.59920	15.28410	-.02260	.00730	.00000	1.96290	.05310	.28590	.05370	.00890
6.238	24.078	.59920	15.28710	-.02100	.00520	.00000	1.96020	.05300	.29120	.05490	.00690
	GRADIENT	-.00018	-.00012	.00122	-.00077	.00000	.00053	-.00006	.00335	-.00012	-.00341

RUN NO. 637/ 0 RN/L = 3.24 GRADIENT INTERVAL = -1.00/ 4.00

ALPHAO	DZ	MACH	DX	DY	BETAO	PHI	ALPHAW	BETA	CL	CD	CLM
10.523	2.219	.59910	12.46630	-.02510	.00710	.00000	1.99630	.05490	.49170	.08820	.05920
10.508	5.391	.59950	12.46980	-.01920	.00660	.00000	1.99520	.04680	.50150	.08660	.04430
10.498	9.749	.60000	12.47340	-.01890	.00600	.00000	1.99040	.04620	.50910	.08700	.03400
10.491	17.197	.59960	12.47830	-.01460	.00350	.00000	1.98140	.04560	.51810	.08660	.02510
10.487	32.470	.59980	12.48740	-.01260	.00010	.00000	1.96940	.05270	.52990	.09150	.01620
10.486	39.016	.60020	12.49080	-.01300	.00080	.00000	1.96590	.05250	.53300	.09220	.01390
10.484	47.260	.59980	12.49400	-.00650	-.00130	.00000	1.96280	.04470	.53560	.09280	.01110
	GRADIENT	.00000	.00000	.00000	.00000	.00000	.00000	.00000	.00000	.00000	.00000

RUN NO. 639/ 0 RN/L = 3.23 GRADIENT INTERVAL = -1.00/ 4.00

ALPHAO	DZ	MACH	DX	DY	BETAO	PHI	ALPHAW	BETA	CL	CD	CLM
14.710	4.989	.60030	11.34780	-.00530	.00200	.00000	2.02580	.04720	.72090	.17400	.06370
14.694	8.249	.59990	11.34880	-.00530	.00170	.00000	2.02180	.04740	.73280	.17150	.05140
14.680	12.695	.60070	11.35090	-.00840	.00150	.00000	2.01540	.05400	.73490	.17180	.04200
14.671	20.170	.60000	11.35310	-.00460	-.00080	.00000	2.00340	.05480	.73950	.17400	.03310
14.656	35.008	.59900	11.36060	-.00440	-.00170	.00000	1.98500	.06070	.74620	.17610	.02290
14.656	50.142	.59990	11.36550	.00210	-.00530	.00000	1.97450	.05240	.74670	.17730	.01960
14.648	64.911	.60050	11.37090	.01860	-.01370	.00000	1.96780	.04470	.74870	.17670	.01510
	GRADIENT	.00000	.00000	.00000	.00000	.00000	.00000	.00000	.00000	.00000	.00000

CA20 747/1 01 SI ORBITER DATA (BGN051) (29 AUG 75)

REFERENCE DATA

SREF = 2690.0000 SQ.FT. XMRP = 1109.0000 IN.XO
LREF = 474.8100 IN. YMRP = .0000 IN.YO
BREF = 936.6800 IN. ZMRP = 375.0000 IN.ZO
SCALE = .0300

PARAMETRIC DATA

ALPHAC = .000 BETAC = .000
ELV-IB = .000 ELV-OB = 3.000
ELEVON = 5.000 MACH = .600
BETAO = .000 PHI = .000
DX = 20.000 DY = .000

RUN NO. 641/ 0 RN/L = 3.24 GRADIENT INTERVAL = -1.00/ 4.00

ALPHAO	DZ	MACH	DX	DY	BETAO	PHI	ALPHAW	BETA	CL	CD	CLM
6.190	8.425	.59990	25.24210	-.02560	.00940	.00000	1.96160	.05390	.26740	.04750	.00508
6.192	11.568	.59910	25.24410	-.02540	.00880	.00000	1.96010	.05370	.27220	.04830	.00400
6.193	16.022	.60000	25.25100	-.02440	.00710	.00000	1.95580	.05350	.27820	.04990	.00350
6.197	23.561	.59930	25.25360	-.02090	.00460	.00000	1.95580	.05310	.28590	.05140	.00260
	GRADIENT	.00000	.00000	.00000	.00000	.00000	.00000	.00000	.00000	.00000	.00000

RUN NO. 640/ 0 RN/L = 3.25 GRADIENT INTERVAL = -1.00/ 4.00

ALPHAO	DZ	MACH	DX	DY	BETAO	PHI	ALPHAW	BETA	CL	CD	CLM
10.406	10.347	.59940	22.40780	-.01410	.00510	.00000	1.99200	.03850	.49860	.08040	.02110
10.407	13.221	.60000	22.41020	-.02080	.00430	.00000	1.97910	.05390	.50190	.08170	.01970
10.409	17.990	.59960	22.41380	-.01610	.00310	.00000	1.97280	.04580	.50740	.08320	.01750
10.410	25.437	.59930	22.42090	-.02000	.00140	.00000	1.96540	.05280	.51490	.08500	.01470
10.413	40.457	.59960	22.43270	-.00750	.00010	.00000	1.95580	.03700	.52300	.08810	.01260
10.411	46.554	.59940	22.43050	-.01450	-.00050	.00000	1.95850	.05260	.52570	.08860	.01030
	GRADIENT	.00000	.00000	.00000	.00000	.00000	.00000	.00000	.00000	.00000	.00000

RUN NO. 639/ 0 RN/L = 3.30 GRADIENT INTERVAL = -1.00/ 4.00

ALPHAO	DZ	MACH	DX	DY	BETAO	PHI	ALPHAW	BETA	CL	CD	CLM
14.618	13.230	.59990	21.18160	-.01070	.00160	.00000	1.99990	.04660	.72380	.15900	.03230
14.617	16.279	.60030	21.18350	-.00400	.00160	.00000	1.99560	.03860	.72450	.16120	.03040
14.616	20.672	.60080	21.18810	-.00540	.00000	.00000	1.98830	.04630	.72590	.16350	.02880
14.614	28.161	.60090	21.19310	-.00210	-.00190	.00000	1.98090	.04560	.73010	.16650	.02510
14.610	43.380	.60080	21.20220	-.00190	-.00220	.00000	1.97060	.04490	.73740	.16990	.01960
14.607	58.256	.60000	21.20560	.00290	-.00690	.00000	1.96620	.04470	.74200	.17060	.01630
14.604	69.990	.60040	21.21290	.01290	-.01260	.00000	1.96040	.04450	.74040	.17100	.01590
	GRADIENT	.00000	.00000	.00000	.00000	.00000	.00000	.00000	.00000	.00000	.00000

CA20 747/1 01 S1 ORBITER DATA (BGN052) (20 JAN 75)

REFERENCE DATA

SREF = 2690.0000 SQ.FT. XMRP = 1109.0000 IN.XO
LREF = 474.8100 IN. YMRP = .0000 IN.YO
BREF = 936.6800 IN. ZMRP = 375.0000 IN.ZO
SCALE = .0300

PARAMETRIC DATA

ALPHAC =	4.000	BETAC =	.000
ELV-IB =	.000	ELV-OB =	3.000
ELEVON =	5.000	MACH =	.600
BETAO =	.000	PHI =	.000
DX =	.000	DY =	.000

RUN NO. 632/ 0 RN/L = 3.24 GRADIENT INTERVAL = -1.00/ 4.00

ALPHAO	DZ	MACH	DX	DY	BETAO	PHI	ALPHAW	BETA	CL	CD	CLM
6.161	-3.400	.60080	3.77560	-.02220	.01160	.00000	5.84160	.05500	.12530	.04510	.04370
6.159	-.517	.60060	3.57890	-.01780	.01220	.00000	5.84240	.04650	.14610	.04470	.03130
6.166	3.831	.60030	3.28090	-.01630	.01030	.00000	5.83870	.04590	.16530	.04620	.02420
6.178	11.707	.59960	2.74170	-.01420	.00790	.00000	5.83720	.05290	.19510	.04850	.01660
6.203	24.148	.59980	1.89550	-.00670	.00240	.00000	5.83190	.04470	.22960	.05270	.01250
	GRADIENT	-.00007	-.06877	.00034	-.00044	.00000	-.00085	-.00014	.00442	.00034	-.00163

RUN NO. 646/ 0 RN/L = 3.24 GRADIENT INTERVAL = -1.00/ 4.00

ALPHAO	DZ	MACH	DX	DY	BETAO	PHI	ALPHAW	BETA	CL	CD	CLM
10.487	1.956	.59980	.61590	-.01230	.00670	.00000	5.86740	.03910	.41680	.08000	.05260
10.482	6.349	.60050	.31720	-.01200	.00600	.00000	5.86210	.04610	.43350	.08080	.04050
10.480	13.746	.59930	-.18850	-.00960	.00400	.00000	5.85350	.04550	.45250	.08320	.03150
10.493	29.253	.59900	-1.25310	-.00390	-.00130	.00000	5.84130	.05260	.48260	.08810	.02260
10.497	34.861	.59980	-1.63870	-.00460	-.00050	.00000	5.83810	.05250	.49080	.08950	.01980
10.501	44.044	.60010	-2.27250	-.00250	-.00050	.00000	5.83380	.04480	.50650	.09120	.01680
	GRADIENT	.00000	.00000	.00000	.00000	.00000	.00000	.00000	.00000	.00000	.00000

RUN NO. 647/ 0 RN/L = 3.24 GRADIENT INTERVAL = -1.00/ 4.00

ALPHAO	DZ	MACH	DX	DY	BETAO	PHI	ALPHAW	BETA	CL	CD	CLM
14.823	.973	.60090	-.34980	-.00900	.00130	.00000	5.90030	.03900	.66840	.16290	.08490
14.798	3.966	.59980	-.55880	-.00710	.00180	.00000	5.89710	.03820	.67440	.16080	.06870
14.785	8.718	.60050	-.88540	-.00540	.00080	.00000	5.89000	.04570	.68210	.16170	.05660
14.777	16.065	.60050	-1.39120	-.00360	-.00020	.00000	5.87650	.05360	.69190	.16460	.04670
14.774	31.103	.60080	-2.42410	.00730	-.00380	.00000	5.85900	.04480	.71270	.17050	.03310
14.771	45.934	.59920	-3.45290	.00920	-.00550	.00000	5.84860	.05240	.72440	.17360	.02670
14.769	60.784	.59920	-4.47470	.02360	-.01350	.00000	5.83630	.04490	.73210	.17510	.02140
	GRADIENT	-.0002	-.06982	.00063	.00017	.00000	-.00107	-.00027	.00200	-.00070	-.00541

CA20 747/1 01 S1 ORBITER DATA (BGN053) (20 JAN 75)

REFERENCE DATA

SREF = 2690.0000 SQ.FT. XMRP = 1109.0000 IN.XO
LREF = 474.8100 IN. YMRP = .0000 IN.YO
BREF = 936.6800 IN. ZMRP = 375.0000 IN.ZO
SCALE = .0300

PARAMETRIC DATA

ALPHAC = 4.000 BETAC = .000
ELV-IB = .000 ELV-OB = 3.000
ELEVON = 5.000 MACH = .600
BETAO = .000 PHI = .000
DX = 10.000 DY = .000

RUN NO. 635/ 0 RN/L = 3.27 GRADIENT INTERVAL = -1.00/ 4.00

ALPHAO	DZ	MACH	DX	DY	BETAO	PHI	ALPHAW	BETA	CL	CD	CLM
6.127	-3.556	.60030	13.78940	-.02950	.01620	.00000	5.83520	.04740	.11870	.04150	.02648
6.127	-.595	.60070	13.58720	-.03250	.01490	.00000	5.83590	.06250	.13630	.04190	.01738
6.134	3.736	.60070	13.29050	-.03270	.01370	.00000	5.83540	.06170	.15720	.04290	.01080
6.151	11.277	.60010	12.77230	-.02220	.01110	.00000	5.83280	.04570	.18420	.04590	.00760
6.169	17.788	.60020	12.32180	-.01940	.00890	.00000	5.83040	.04560	.20320	.04830	.00710
	GRADIENT	-.00000	-.06850	-.00005	-.00028	.00000	-.00012	-.00018	.00483	.00023	-.00150

RUN NO. 694/ 0 RN/L = 3.23 GRADIENT INTERVAL = -1.00/ 4.00

ALPHAO	DZ	MACH	DX	DY	BETAO	PHI	ALPHAW	BETA	CL	CD	CLM
10.448	-1.201	.60020	10.79470	-.01680	.01530	.00000	5.84020	.00060	.36980	.07600	.06050
10.431	1.842	.60020	10.59270	-.01490	.01460	.00000	5.84070	-.00010	.38920	.07530	.04330
10.432	6.408	.60090	10.28290	-.00960	.01300	.00000	5.83720	-.00860	.40970	.07660	.03150
10.436	13.966	.59990	9.77130	-.01040	.01100	.00000	5.82810	-.00150	.43340	.07970	.02410
10.455	28.936	.60050	8.74770	-.00770	.00610	.00000	5.82040	.00580	.46690	.08510	.01790
10.476	43.999	.60000	7.70840	-.00180	.00500	.00000	5.81390	-.00170	.48790	.08870	.01380
10.477	48.276	.60010	7.41470	-.00160	.00420	.00000	5.81240	-.00180	.49360	.08920	.01160
	GRADIENT	.00000	.00000	.00000	.00000	.00000	.00000	.00000	.00000	.00000	.00000

RUN NO. 693/ 0 RN/L = 3.23 GRADIENT INTERVAL = -1.00/ 4.00

ALPHAO	DZ	MACH	DX	DY	BETAO	PHI	ALPHAW	BETA	CL	CD	CLM
14.751	1.086	.60030	9.51270	-.01800	.00830	.00000	5.86830	-.00710	.63000	.14510	.08420
14.731	4.167	.59960	9.30440	-.01580	.00800	.00000	5.86720	-.00830	.64550	.14440	.06460
14.724	8.638	.60010	9.00320	-.01780	.00750	.00000	5.85940	-.00090	.65980	.14710	.05240
14.722	16.335	.60040	8.47860	-.01790	.00660	.00000	5.85020	.00610	.67730	.15310	.04160
14.722	31.320	.59960	7.45320	-.00050	.00300	.00000	5.83490	-.00200	.69990	.16220	.03040
14.727	46.516	.60010	6.40990	-.00130	.00270	.00000	5.82450	.00580	.71320	.16780	.02550
14.727	61.207	.59940	5.39790	.01430	-.00580	.00000	5.81820	-.00200	.72320	.16980	.02060
	GRADIENT	.00000	.00000	.00000	.00000	.00000	.00000	.00000	.00000	.00000	.00000

CA20 747/1 01 S1 ORBITER DATA (BGN054) (20 JAN 75)

REFERENCE DATA

SREF = 2690.0000 SQ.FT. XMRP = 1109.0000 IN.XO
LREF = 474.8100 IN. YMRP = .0000 IN.YO
BREF = 936.6800 IN. ZMRP = 375.0000 IN.ZO
SCALE = .0300

PARAMETRIC DATA

ALPHAC = 4.000 BETAC = .000
ELV-IB = .000 ELV-OB = 3.000
ELEVON = 5.000 MACH = .600
BETAO = .000 PHI = .000
DX = 20.000 DY = .000

RUN NO. 642/ 0 RN/L = 3.22 GRADIENT INTERVAL = -1.00/ 4.00

ALPHAO	DZ	MACH	DX	DY	BETAO	PHI	ALPHAH	BETA	CL	CD	CLM
6.093	2.348	.59910	23.37960	-.02250	.01360	.00000	5.83400	.04650	.15220	.03890	-.00200
6.103	5.577	.59930	23.15610	-.02620	.01220	.00000	5.83120	.05400	.16370	.04040	-.00270
6.111	9.879	.59920	22.86210	-.02590	.01070	.00000	5.83040	.05370	.17790	.04210	-.00230
6.132	17.481	.59960	22.33520	-.01930	.00820	.00000	5.82870	.04560	.19790	.04520	.00020
6.145	25.860	.59980	21.75890	-.02230	.00550	.00000	5.82680	.05300	.21810	.04750	.00060
	GRADIENT	.00000	.00000	.00000	.00000	.00000	.00000	.00000	.00000	.00000	.00000

RUN NO. 677/ 0 RN/L = 3.28 GRADIENT INTERVAL = -1.00/ 4.00

ALPHAO	DZ	MACH	DX	DY	BETAO	PHI	ALPHAH	BETA	CL	CD	CLM
10.302	4.428	.59980	20.39070	.00180	.01220	.00000	5.85300	-.00890	.38930	.07130	.01900
10.309	7.499	.60020	20.18050	.00640	.01130	.00000	5.84870	-.01700	.39940	.07340	.01690
10.316	11.949	.59990	19.87580	.01160	.01040	.00000	5.84580	-.02500	.41370	.07550	.01460
10.336	19.513	.59990	19.35470	.00820	.00760	.00000	5.83900	-.01750	.43480	.07890	.01280
10.357	34.554	.60000	18.31350	.00950	.00490	.00000	5.83680	-.00990	.46390	.08400	.01130
10.367	48.107	.60030	17.37700	.01200	.00310	.00000	5.83240	-.00970	.48280	.08650	.00860
	GRADIENT	.00000	.00000	.00000	.00000	.00000	.00000	.00000	.00000	.00000	.00000

RUN NO. 676/ 0 RN/L = 3.27 GRADIENT INTERVAL = -1.00/ 4.00

ALPHAO	DZ	MACH	DX	DY	BETAO	PHI	ALPHAH	BETA	CL	CD	CLM
14.565	7.759	.59950	18.91230	-.00490	.00530	.00000	5.87200	-.00890	.63570	.13510	.04100
14.565	10.920	.60050	18.69760	-.00170	.00500	.00000	5.87010	-.01700	.64660	.13810	.03670
14.575	15.111	.59950	18.40910	-.01090	.00430	.00000	5.86550	-.00210	.65650	.14180	.03420
14.571	22.922	.60080	17.87690	.00060	.00150	.00000	5.85810	-.01770	.67330	.14810	.03010
14.590	37.645	.59910	16.86160	.00120	.00210	.00000	5.84840	-.01000	.69830	.15620	.02440
14.589	52.832	.59920	15.81080	.01610	-.00130	.00000	5.84130	-.01000	.70810	.16260	.02160
14.705	68.281	.60040	14.72650	.03240	-.00970	.00000	5.83640	-.01740	.71610	.16630	.01900
	GRADIENT	.00000	.00000	.00000	.00000	.00000	.00000	.00000	.00000	.00000	.00000

CA20 747/1 01 S1 ORBITER DATA (BGN055) (20 JAN 75)

REFERENCE DATA

SREF =	2690.0000 SQ.FT.	XMRP =	1109.0000 IN.XO		
LREF =	474.8100 IN.	YMRP =	.0000 IN.YO		
BREF =	936.6800 IN.	ZMRP =	375.0000 IN.ZO		
SCALE =	.0300				

PARAMETRIC DATA

ALPHAC =	8.000	BETAC =	.000
ELV-IB =	.000	ELV-OB =	3.000
ELEVON =	5.000	MACH =	.600
BETAO =	.000	PHI =	.000
DX =	.000	DY =	.000

RUN NO. 633/ 0 RN/L = 3.23 GRADIENT INTERVAL = -1.00/ 4.00

ALPHAO	DZ	MACH	DX	DY	BETAO	PHI	ALPHAW	BETA	CL	CD	CLH
5.939	-.987	.59920	1.93130	-.01440	.01090	.00000	9.71490	.04850	-.02760	.02360	-.00120
5.987	1.851	.59950	1.54240	-.01510	.00980	.00000	9.71670	.05580	.00450	.02770	.00920
6.027	6.647	.60070	.87960	-.01400	.00900	.00000	9.71750	.04770	.04060	.03210	.01260
6.074	14.133	.59940	-.15900	-.01320	.00770	.00000	9.71900	.05480	.08880	.03850	.01390
6.098	18.812	.60020	-.80660	-.01220	.00620	.00000	9.71600	.05470	.11420	.04170	.01400
6.122	24.109	.60050	-1.54470	-.00780	.00320	.00000	9.71780	.04700	.13850	.04490	.01460
	GRADIENT	.00011	-.13704	-.00025	-.00039	.00000	.00063	.00257	.01131	.00144	.00366

RUN NO. 645/ 0 RN/L = 3.25 GRADIENT INTERVAL = -1.00/ 4.00

ALPHAO	DZ	MACH	DX	DY	BETAO	PHI	ALPHAW	BETA	CL	CD	CLH
10.299	-2.897	.59940	-.65080	-.01520	.00760	.00000	9.73420	.05720	.21500	.05380	.06240
10.303	.285	.60020	-1.07800	-.01080	.00800	.00000	9.73240	.04110	.25070	.05700	.04810
10.323	4.651	.60030	-1.67400	-.01440	.00810	.00000	9.73030	.04770	.28620	.06080	.04020
10.355	12.183	.60030	-2.70650	-.01300	.00630	.00000	9.72660	.04680	.33280	.06750	.03480
10.431	27.416	.60060	-4.81880	-.00970	.00170	.00000	9.71950	.05430	.40460	.07850	.02680
10.459	42.296	.60050	-6.68330	-.00430	.00010	.00000	9.71470	.05450	.44530	.08520	.02240
10.464	47.714	.59970	-7.63700	-.00290	-.00120	.00000	9.71360	.05430	.45850	.08640	.01860
	GRADIENT	.00000	.00000	.00000	.00000	.00000	.00000	.00000	.00000	.00000	.00000

RUN NO. 644/ 0 RN/L = 3.28 GRADIENT INTERVAL = -1.00/ 4.00

ALPHAO	DZ	MACH	DX	DY	BETAO	PHI	ALPHAW	BETA	CL	CD	CLH
14.701	-.738	.60050	-2.01430	-.01310	.00390	.00000	9.76940	.04100	.51610	.11890	.09400
14.691	2.335	.60030	-2.43060	-.01170	.00370	.00000	9.76740	.03260	.54350	.12180	.07410
14.699	6.812	.60060	-3.04150	-.01650	.00270	.00000	9.76110	.03970	.56990	.12750	.05410
14.714	14.542	.59980	-4.10420	-.01810	.00100	.00000	9.75120	.04640	.60350	.13520	.05530
14.743	29.472	.60060	-6.16200	-.01050	-.00310	.00000	9.73740	.04580	.65450	.15070	.04390
14.754	44.335	.60010	-8.22650	-.00360	-.00260	.00000	9.72820	.05410	.68420	.16070	.03430
14.762	59.151	.60020	-10.28770	.01310	-.00990	.00000	9.72010	.04650	.70260	.16650	.02840
	GRADIENT	-.00007	-.13549	.00046	-.00007	.00000	-.00065	-.00273	.00892	.00094	-.00648

ORIGINAL PAGE IS
OF POOR QUALITY

CA20 747/1 01 S1 ORBITER DATA (BGN058) (20 JAN 75)

REFERENCE DATA

SREF = 2690.0000 SQ.FT. XMRP = 1109.0000 IN.XO
LREF = 474.8100 IN. YMRP = .0000 IN.YO
BREF = 936.6800 IN. ZMRP = 375.0000 IN.ZO
SCALE = .0300

PARAMETRIC DATA

ALPHAC = 8.000 BETAC = .000
ELV-IB = .000 ELV-OB = 3.000
ELEVON = 5.000 MACH = .600
BETAO = .000 PHI = .000
DX = 10.000 DY = .000

RUN NO. 634/ 0 RN/L = 3.30 GRADIENT INTERVAL = -1.00/ 4.00

ALPHAO	DZ	MACH	DX	DY	BETAO	PHI	ALPHAH	BETA	CL	CD	CLN
5.917	-2.155	.59920	12.18910	-.03110	.01740	.00000	9.71230	.05720	-.02850	.02140	-.02260
5.956	.903	.60070	11.76590	-.02850	.01660	.00000	9.71600	.04690	-.00120	.02490	-.01190
5.994	5.537	.59940	11.12250	-.02580	.01440	.00000	9.71450	.04800	.03200	.02860	-.00730
6.038	12.684	.60000	10.12740	-.02420	.01290	.00000	9.71670	.04760	.07390	.03460	-.00170
6.070	19.121	.59950	9.23370	-.02490	.01020	.00000	9.71600	.05510	.10670	.03890	.00170
6.098	25.727	.59950	8.31400	-.02300	.00700	.00000	9.71520	.05500	.13550	.04270	.00420
	GRADIENT	.00000	.00000	.00000	.00000	.00000	.00000	.00000	.00000	.00000	.00000

RUN NO. 691/ 0 RN/L = 3.24 GRADIENT INTERVAL = -1.00/ 4.00

ALPHAO	DZ	MACH	DX	DY	BETAO	PHI	ALPHAH	BETA	CL	CD	CLN
10.217	-2.770	.59940	9.39150	-.01990	.01790	.00000	9.73900	.01070	.19260	.05080	.04100
10.225	.202	.60050	8.98730	-.01830	.01690	.00000	9.73760	.01010	.22130	.05300	.03190
10.258	5.005	.60030	8.31960	-.01770	.01580	.00000	9.73910	.00890	.25830	.05690	.02550
10.289	12.254	.60010	7.32340	-.01180	.01310	.00000	9.73430	.00070	.30560	.06340	.02230
10.355	27.323	.59960	5.23270	-.01300	.00800	.00000	9.72900	.01580	.37920	.07440	.01940
10.401	42.555	.59930	3.10580	-.00360	.00660	.00000	9.72690	.00060	.42570	.08180	.01690
10.410	48.530	.60030	2.27610	-.00620	.00600	.00000	9.72320	.00840	.44000	.08370	.01480
	GRADIENT	.00000	.00000	.00000	.00000	.00000	.00000	.00000	.00000	.00000	.00000

RUN NO. 692/ 0 RN/L = 3.23 GRADIENT INTERVAL = -1.00/ 4.00

ALPHAO	DZ	MACH	DX	DY	BETAO	PHI	ALPHAH	BETA	CL	CD	CLN
14.599	-.266	.59960	7.86010	-.01000	.01200	.00000	9.76440	-.00560	.46930	.10830	.07520
14.597	2.610	.59960	7.47010	-.01020	.01100	.00000	9.76290	-.00620	.49630	.11100	.06150
14.613	7.478	.60000	6.80220	-.01470	.01070	.00000	9.76070	.00080	.52700	.11610	.05390
14.633	14.672	.60030	5.81800	-.02120	.00930	.00000	9.75250	.00770	.56980	.12480	.04510
14.673	29.795	.60000	3.73130	-.01120	.00310	.00000	9.74240	-.00020	.63290	.14090	.03580
14.695	44.753	.59980	1.65330	-.01330	.00280	.00000	9.73500	.00790	.67050	.15180	.03050
14.712	59.602	.60090	-.41850	-.00080	-.00380	.00000	9.72990	.00820	.68950	.15940	.02810
	GRADIENT	-.00000	-.13563	-.00007	-.00035	.00000	-.00052	-.00021	.00939	.00094	-.00476

CA20 747/1 01 S1 ORBITER DATA (BGN057) (20 JAN 75)

REFERENCE DATA

SREF =	2690.0000 SQ.FT.	XMRP =	1109.0000 IN.XO		
LREF =	474.8100 IN.	YMRP =	.0000 IN.YO		
BREF =	936.6800 IN.	ZMRP =	375.0000 IN.ZO		
SCALE =	.0300				

PARAMETRIC DATA

ALPHAC =	8.000	BETAC =	.000
ELV-IB =	.000	ELV-OB =	3.000
ELEVON =	5.000	MACH =	.600
BETAO =	.000	PHI =	.000
DX =	20.000	DY =	.000

RUN NO. 643/ 0 RN/L = 3.22 GRADIENT INTERVAL = -1.00/ 4.00

ALPHAO	DZ	MACH	DX	DY	BETAO	PHI	ALPHAH	BETA	CL	CD	CLM
5.918	-3.193	.60060	22.40390	-.02500	.01850	.00000	9.70870	.04980	-.02020	.01880	-.03318
5.942	-.094	.60060	21.97440	-.02980	.01740	.00000	9.70850	.05680	.00100	.02130	-.02770
5.973	4.408	.60010	21.34670	-.02910	.01520	.00000	9.70990	.05610	.02960	.02490	-.02290
6.011	11.874	.60030	20.31020	-.02640	.01200	.00000	9.70990	.05540	.06800	.03050	-.01510
6.079	26.802	.60020	18.22690	-.01920	.00740	.00000	9.71150	.04720	.13320	.04000	-.00400
	GRADIENT	.00000	.00000	.00000	.00000	.00000	.00000	.00000	.00000	.00000	.00000

RUN NO. 674/ 0 RN/L = 3.27 GRADIENT INTERVAL = -1.00/ 4.00

ALPHAO	DZ	MACH	DX	DY	BETAO	PHI	ALPHAH	BETA	CL	CD	CLM
10.226	-1.405	.59980	19.22120	.00080	.01770	.00000	9.73920	-.00550	.20790	.04960	.01500
10.235	1.641	.60060	18.80350	.00330	.01660	.00000	9.73750	-.01420	.23110	.05240	.01120
10.253	6.023	.60060	18.19850	.00170	.01390	.00000	9.73650	-.00710	.26130	.05600	.00940
10.290	13.703	.60070	17.13510	.00620	.01250	.00000	9.73300	-.01530	.30500	.06280	.01050
10.351	28.615	.59970	15.05830	.00700	.00660	.00000	9.73110	-.00770	.37520	.07300	.01090
10.395	43.888	.60080	12.92800	.00900	.00590	.00000	9.72550	-.00750	.41920	.08050	.01300
10.403	49.633	.59980	12.11970	.00900	.00450	.00000	9.72910	-.00730	.43190	.08260	.01250
	GRADIENT	.00000	.00000	.00000	.00000	.00000	.00000	.00000	.00000	.00000	.00000

RUN NO. 675/ 0 RN/L = 3.27 GRADIENT INTERVAL = -1.00/ 4.00

ALPHAO	DZ	MACH	DX	DY	BETAO	PHI	ALPHAH	BETA	CL	CD	CLM
14.444	1.517	.60060	17.56580	.01060	.01100	.00000	9.75870	-.02180	.46100	.10220	.04480
14.457	4.549	.59960	17.14950	.00580	.00970	.00000	9.75720	-.01490	.48450	.10570	.03860
14.478	9.043	.59980	16.53140	-.00060	.00910	.00000	9.75430	-.00770	.51260	.11070	.03530
14.497	16.873	.60010	15.45500	.00340	.00640	.00000	9.74680	-.01590	.55350	.11970	.03450
14.563	31.919	.59990	13.36970	.00580	.00150	.00000	9.73960	-.01590	.61580	.13460	.03090
14.607	46.722	.60090	11.30630	-.00570	.00080	.00000	9.73640	-.00030	.65450	.14590	.02730
14.693	62.461	.59960	9.09770	.00820	-.00670	.00000	9.73250	-.00770	.68010	.15330	.02370
	GRADIENT	.00000	.00000	.00000	.00000	.00000	.00000	.00000	.00000	.00000	.00000

CA20 747/1 01 SI ORBITER DATA (BGN058) (20 JAN 75)

REFERENCE DATA

SREF = 2690.0000 SQ.FT. XMRP = 1109.0000 IN.XO
LREF = 474.8100 IN. YMRP = .0000 IN.YO
BREF = 936.6800 IN. ZMRP = 375.0000 IN.ZO
SCALE = .0300

PARAMETRIC DATA

ALPHAC =	4.000	BETAC =	.000
ELV-IB =	.000	ELV-OB =	3.000
ELEVON =	5.000	MACH =	.600
BETAO =	.000	PHI =	.000
DX =	.000	DY =	10.000

RUN NO. 775/ 0 RN/L = 3.33 GRADIENT INTERVAL = -1.00/ 4.00

ALPHAO	DZ	MACH	DX	DY	BETAO	PHI	ALPHAH	BETA	CL	CD	CLM
10.536	-1.419	.60030	.85680	9.98100	.02160	.00000	5.83050	.01560	.42730	.08130	.05670
10.526	1.326	.60030	.67100	9.97800	.02320	.00000	5.82840	.02110	.43750	.08020	.04800
10.524	5.838	.60070	.36640	9.97700	.02290	.00000	5.81890	.00970	.44720	.08110	.04120
10.524	13.085	.59950	-.12830	9.97800	.01910	.00000	5.81440	.00650	.46220	.08270	.03380
10.536	28.495	.60020	-1.17810	9.98970	.00690	.00000	5.80330	.01060	.48620	.08730	.02720
10.542	43.191	.60090	-2.18280	10.00100	-.00020	.00000	5.79600	.01030	.50180	.09040	.02200
10.542	47.091	.60080	-2.45200	10.00520	-.00310	.00000	5.79670	.01100	.50730	.09050	.01910
	GRADIENT	.00000	.00000	.00000	.00000	.00000	.00000	.00000	.00000	.00000	.00000

RUN NO. 781/ 0 RN/L = 3.22 GRADIENT INTERVAL = -1.00/ 4.00

ALPHAO	DZ	MACH	DX	DY	BETAO	PHI	ALPHAH	BETA	CL	CD	CLM
14.865	1.432	.60080	-.35660	9.94370	.01800	.00000	5.86870	.02570	.70180	.16000	.06030
14.849	5.001	.60000	-.60690	9.94940	.02110	.00000	5.86350	.02250	.69880	.15880	.05550
14.843	8.890	.60050	-.87520	9.95610	.02080	.00000	5.85720	.00920	.69900	.16020	.05140
14.834	16.716	.60050	-1.41420	9.96810	.01550	.00000	5.84460	.01190	.70240	.16290	.04370
14.831	29.965	.60070	-2.32080	9.98930	.00570	.00000	5.82750	-.00030	.71140	.16820	.03650
14.830	31.354	.60040	-2.41560	9.98990	.00430	.00000	5.82630	.00740	.71410	.16840	.03510
14.828	46.543	.60000	-3.46170	10.00500	-.00210	.00000	5.81770	.00830	.72260	.17160	.02940
14.820	61.677	.59960	-4.50100	10.02160	-.01260	.00000	5.80820	.01030	.72800	.17370	.02260
	GRADIENT	.00000	.00000	.00000	.00000	.00000	.00000	.00000	.00000	.00000	.00000

CA20 747/1 01 S1 ORBITER DATA (BGN059) (20 JAN 75)

REFERENCE DATA

SREF = 2690.0000 SQ.FT. XMRP = 1109.0000 IN.XO
LREF = 474.8100 IN. YMRP = .0000 IN.YO
BREF = 936.6800 IN. ZMRP = 375.0000 IN.ZO
SCALE = .0300

PARAMETRIC DATA

ALPHAC =	4.000	BETAC =	.000
ELV-IB =	.000	ELV-OB =	3.000
ELEVON =	5.000	MACH =	.600
BETAO =	.000	PHI =	.000
DX =	10.000	DY =	10.000

RUN NO. 735/ 0 RN/L = 3.31 GRADIENT INTERVAL = -1.00/ 4.00

ALPHAO	DZ	MACH	DX	DY	BETAO	PHI	ALPHAW	BETA	CL	CD	CLM
10.410	-2.369	.59950	10.89070	9.99070	.02220	.00000	5.86010	.00060	.39060	.07470	.04870
10.404	1.142	.60030	10.65090	9.98750	.02500	.00000	5.86050	.00600	.40480	.07390	.03680
10.407	5.650	.60010	10.34040	9.98660	.02370	.00000	5.85670	-.00520	.41830	.07470	.03070
10.424	13.193	.60040	9.81870	9.98950	.01890	.00000	5.85130	-.00840	.43730	.07700	.02630
10.437	27.965	.60000	8.80350	9.99570	.00820	.00000	5.84270	-.00450	.46830	.08110	.02040
10.445	42.957	.59950	7.77080	10.00860	.00120	.00000	5.83450	-.01260	.48700	.08470	.01740
10.450	46.957	.60000	7.49300	10.00900	-.00140	.00000	5.83280	-.00430	.49120	.08530	.01650
	GRADIENT	.00000	.00000	.00000	.00000	.00000	.00000	.00000	.00000	.00000	.00000

RUN NO. 738/ 0 RN/L = 3.24 GRADIENT INTERVAL = -1.00/ -4.00

ALPHAO	DZ	MACH	DX	DY	BETAO	PHI	ALPHAW	BETA	CL	CD	CLM
14.679	-.128	.60020	9.59730	9.97850	.01040	.00000	5.89440	-.00270	.65290	.14310	.06360
14.671	3.023	.60010	9.38060	9.97590	.01530	.00000	5.89080	-.00540	.66060	.14220	.05340
14.668	7.553	.60000	9.06900	9.97480	.01440	.00000	5.88650	-.00590	.66990	.14340	.04710
14.673	14.858	.60060	8.56540	9.98310	.01020	.00000	5.87810	-.01910	.67910	.14840	.04410
14.673	30.066	.60000	7.51480	10.00810	.00090	.00000	5.86360	-.02340	.69900	.15720	.03430
14.682	44.947	.60060	6.48600	10.02130	-.00590	.00000	5.85260	-.02250	.71130	.16210	.02770
14.683	59.957	.60050	5.43820	10.03040	-.01380	.00000	5.85030	-.00490	.72140	.16530	.02260
	GRADIENT	-.00003	-.06876	-.00082	.00155	.00000	-.00114	-.00117	.00244	-.00029	-.00324

CA20 747/1 01 S1 ORBITER DATA (BOH060) (20 JAN 75)

REFERENCE DATA

SREF =	2690.0000 SQ.FT.	XMRP =	1109.0000 IN.XO		
LREF =	474.8100 IN.	YMRP =	.0000 IN.YO		
BREF =	936.6800 IN.	ZMRP =	375.0000 IN.ZO		
SCALE =	.0300				

PARAMETRIC DATA

ALPHAC =	8.000	BETAC =	.000
ELV-1B =	.000	ELV-DB =	3.000
ELEVON =	5.000	MACH =	.600
BETAO =	.000	PHI =	.000
DX =	.000	DY =	10.000

RUN NO. 780/ 0 RN/L = 3.24 GRADIENT INTERVAL = -1.00/ 4.00

ALPHAO	DZ	MACH	DX	DY	BETAO	PHI	ALPHAW	BETA	CL	CD	CLM
10.362	-1.757	.60010	-.78530	10.03920	.00620	.00000	9.67770	.00770	.26450	.05530	.05000
10.376	.812	.60050	-1.13020	10.01360	.01490	.00000	9.67470	.01270	.29000	.05810	.04430
10.393	5.122	.59910	-1.71630	9.99440	.02190	.00000	9.67280	.01040	.31700	.06240	.04140
10.433	12.353	.60010	-2.71010	9.97970	.02480	.00000	9.67120	.00750	.35600	.06840	.03830
10.490	27.651	.59950	-4.84220	9.98430	.01500	.00000	9.66450	.00390	.41900	.07810	.03050
10.511	42.980	.59990	-6.92130	9.99200	.00710	.00000	9.65560	.00540	.45690	.08470	.02490
10.512	46.793	.59930	-7.44810	9.99030	.00520	.00000	9.65390	.02120	.46240	.08610	.02430
	GRADIENT	.00000	.00000	.00000	.00000	.00000	.00000	.00000	.00000	.00000	.00000

RUN NO. 787/ 0 RN/L = 3.18 GRADIENT INTERVAL = -1.00/ 4.00

ALPHAO	DZ	MACH	DX	DY	BETAO	PHI	ALPHAW	BETA	CL	CD	CLM
14.755	.306	.60060	-2.12040	10.00190	.00500	.00000	9.69920	.02650	.54400	.12300	.07710
14.757	3.230	.59980	-2.51630	9.98410	.01160	.00000	9.69640	.02840	.56300	.12530	.06890
14.766	7.801	.60080	-3.13560	9.96970	.01720	.00000	9.69090	.02280	.58670	.12900	.06150
14.743	15.148	.60010	-4.13630	9.96310	.01620	.00000	9.68370	.01890	.60920	.13630	.05850
14.783	15.383	.60090	-4.17270	9.96030	.01690	.00000	9.68250	.01880	.61090	.13650	.05780
14.805	30.352	.60060	-6.21870	9.95960	.00920	.00000	9.66770	.00970	.66030	.15060	.04470
14.814	45.218	.60030	-8.27030	9.98620	.00220	.00000	9.66150	.01090	.68550	.16020	.03750
14.814	60.205	.60010	-10.34390	10.00840	-.00810	.00000	9.65530	.02060	.70110	.16630	.02920
	GRADIENT	-.00027	-.13541	-.00609	.00226	.00000	-.00096	.00065	.00650	.00079	-.00280

CA20 747/1 01 SI ORBITER DATA (BGN061) (20 JAN 75)

REFERENCE DATA

SREF =	2690.0000 SQ.FT.	XMRP =	1109.0000 IN.XO		
LREF =	474.8100 IN.	YMRP =	.0000 IN.YO		
BREF =	936.6800 IN.	ZMRP =	375.0000 IN.ZO		
SCALE =	.0300				

PARAMETRIC DATA

ALPHAC =	8.000	BETAC =	.000
ELV-IB =	.000	ELV-OB =	3.000
ELEVON =	5.000	MACH =	.600
BETAO =	.000	PHI =	.000
DX =	10.000	DY =	10.000

RUN NO. 736/ 0 RN/L = 3.27 GRADIENT INTERVAL = -1.00/ 4.00

ALPHAO	DZ	MACH	DX	DY	BETAO	PHI	ALPHAW	BETA	CL	CD	CLM
10.233	-3.822	.59980	9.54260	10.05490	.00500	.00000	9.72970	-.00620	.21050	.04790	.03470
10.250	-.443	.59940	9.08310	10.02460	.01480	.00000	9.72840	-.00130	.24640	.05180	.02730
10.273	3.946	.60060	8.47950	10.00670	.02180	.00000	9.72760	-.00370	.27580	.05570	.02540
10.305	11.425	.59960	7.44960	9.99240	.02410	.00000	9.72290	-.00650	.31980	.06130	.02400
10.370	26.395	.59930	5.36860	9.99710	.01400	.00000	9.72260	-.01060	.38620	.07120	.02300
10.405	41.249	.60010	3.30380	10.00370	.00630	.00000	9.71680	-.00950	.42810	.07810	.02120
10.417	47.343	.60010	2.45280	10.00480	.00340	.00000	9.71510	-.00120	.43980	.08050	.02080
	GRADIENT	.00027	-.13750	-.00408	.00159	.00000	-.00018	-.00055	.00670	.00089	-.00043

RUN NO. 737/ 0 RN/L = 3.24 GRADIENT INTERVAL = -1.00/ 4.00

ALPHAO	DZ	MACH	DX	DY	BETAO	PHI	ALPHAW	BETA	CL	CD	CLM
14.551	-1.912	.59950	6.11220	10.04110	.00360	.00000	9.75230	-.01040	.49610	.10750	.06260
14.559	1.350	.60000	7.66560	10.02940	.01050	.00000	9.75390	-.00860	.51800	.11130	.05600
14.571	5.795	.59930	7.05740	10.00480	.01360	.00000	9.74870	.00140	.54520	.11520	.05010
14.596	13.276	.59950	6.02790	9.99330	.01360	.00000	9.74290	-.01120	.57910	.12280	.04710
14.628	27.980	.60090	3.99750	9.99600	.00470	.00000	9.73330	-.02110	.63070	.13540	.04180
14.652	43.114	.60090	1.89710	9.99740	-.00080	.00000	9.72630	-.01210	.66960	.14690	.03420
14.658	57.869	.60010	-.16040	10.01600	-.01010	.00000	9.72200	-.00990	.69060	.15430	.02920
	GRADIENT	.00000	.00000	.00000	.00000	.00000	.00000	.00000	.00000	.00000	.00000

ORIGINAL PAGE IS
OF POOR QUALITY

CA20 747/1 01 S1 ORBITER DATA (BGN062) (20 JAN 75)

REFERENCE DATA

SREF = 2690.0000 SQ.FT. XMRP = 1109.0000 IN.XO
LREF = 474.8100 IN. YMRP = .0000 IN.YO
BREF = 936.6800 IN. ZMRP = 375.0000 IN.ZO
SCALE = .0300

PARAMETRIC DATA

ALPHAC = 4.000 BETAC = -5.000
ELV-IB = .000 ELV-OB = 3.000
ELEVON = 5.000 MACH = .600
BETAO = .000 PHI = .000
DX = .000 DY = .000

RUN NO. 649/ 0 RN/L = 3.23 GRADIENT INTERVAL = -1.00/ 4.00

ALPHAO	DZ	MACH	DX	DY	BETAO	PHI	ALPHAH	BETA	CL	CD	CLM
10.509	-1.137	.59940	.80340	1.02360	.03310	.00000	5.86240	-4.98170	.39060	.08190	.07490
10.494	1.605	.59910	.60690	1.04100	.02650	.00000	5.85990	-4.97100	.41500	.08130	.05220
10.489	6.479	.60010	.29110	1.07360	.01560	.00000	5.85550	-4.97800	.43310	.08220	.04070
10.492	14.163	.59930	-.23620	1.09950	.00560	.00000	5.85080	-4.97850	.45310	.08400	.03210
10.505	28.706	.59930	-1.23230	1.11960	-.00330	.00000	5.83810	-4.97200	.48100	.08870	.02420
10.508	37.359	.59920	-1.82790	1.12640	-.00420	.00000	5.83380	-4.98120	.49400	.09040	.01940
10.511	44.033	.59940	-2.28840	1.12900	-.00370	.00000	5.83110	-4.98950	.50100	.09150	.01730
	GRADIENT	.00000	.00000	.00000	.00000	.00000	.00000	.00000	.00000	.00000	.00000

RUN NO. 648/ 0 RN/L = 3.23 GRADIENT INTERVAL = -1.00/ 4.00

ALPHAO	DZ	MACH	DX	DY	BETAO	PHI	ALPHAH	BETA	CL	CD	CLM
14.815	1.009	.59980	-.36760	.95890	.02150	.00000	5.88900	-4.94920	.66720	.16460	.08220
14.791	4.326	.60030	-.59540	.96740	.01680	.00000	5.88950	-4.94670	.67970	.16290	.06010
14.781	8.540	.60010	-.88820	.99440	.01090	.00000	5.88650	-4.96920	.68410	.16280	.05350
14.774	15.930	.60000	-1.39450	1.01820	.00320	.00000	5.87180	-4.97950	.69280	.16530	.04500
14.772	31.119	.59970	-2.44090	1.04050	-.00590	.00000	5.85680	-4.97430	.71220	.17070	.03370
14.770	46.180	.59930	-3.47810	1.04640	-.00790	.00000	5.84340	-4.97320	.72480	.17390	.02620
14.771	61.235	.60080	-4.51880	1.06280	-.01630	.00000	5.83610	-4.98050	.73080	.17540	.02170
	GRADIENT	.00000	.00000	.00000	.00000	.00000	.00000	.00000	.00000	.00000	.00000

CA20 747/1 01 S1 ORBITER DATA (BGN063) (20 JAN 75)

REFERENCE DATA

SREF =	2690.0000 SQ.FT.	XMRP =	1109.0000 IN.XO		
LREF =	474.8100 IN.	YMRP =	.0000 IN.YO		
BREF =	936.6800 IN.	ZMRP =	375.0000 IN.ZO		
SCALE =	.0300				

PARAMETRIC DATA

ALPHAC =	4.000	BETAC =	-5.000
ELV-IB =	.000	ELV-OB =	3.000
ELEVON =	5.000	MACH =	.600
BETAO =	.000	PHI =	.000
DX =	10.000	DY =	.000

RUN NO. 687/ 0 RN/L = 3.29 GRADIENT INTERVAL = -1.00/ 4.00

ALPHAO	DZ	MACH	DX	DY	BETAO	PHI	ALPHAW	BETA	CL	CD	CLM
10.405	-1.205	.59940	10.77730	1.90140	.03370	.00000	5.86870	-4.98130	.35640	.07570	.06170
10.394	1.344	.60020	10.60790	1.91000	.02940	.00000	5.86910	-4.97040	.38200	.07590	.04100
10.395	6.229	.60060	10.27400	1.93450	.02040	.00000	5.86640	-4.96980	.40630	.07660	.02760
10.414	13.845	.60080	9.74720	1.95870	.01170	.00000	5.86110	-4.97800	.42910	.07950	.02270
10.432	28.880	.60030	8.71070	1.97770	.00290	.00000	5.85270	-4.97890	.46360	.08440	.01650
10.441	43.758	.59900	7.68350	1.98520	.00130	.00000	5.84450	-4.98020	.48450	.08790	.01320
10.445	48.107	.60080	7.38000	1.98680	.00000	.00000	5.84530	-4.97980	.48930	.08870	.01240
	GRADIENT	.00000	.00000	.00000	.00000	.00000	.00000	.00000	.00000	.00000	.00000

RUN NO. 688/ 0 RN/L = 3.26 GRADIENT INTERVAL = -1.00/ 4.00

ALPHAO	DZ	MACH	DX	DY	BETAO	PHI	ALPHAW	BETA	CL	CD	CLM
14.748	1.142	.60040	9.54500	1.81420	.02050	.00000	5.75210	-4.94670	.63200	.14930	.08260
14.723	4.240	.59970	9.34440	1.81850	.01890	.00000	5.75270	-4.95250	.65670	.14920	.05540
14.719	8.654	.59970	9.05210	1.84460	.01430	.00000	5.74690	-4.97680	.68460	.15080	.04840
14.719	16.242	.59940	8.54770	1.86060	.00800	.00000	5.73890	-4.97240	.67750	.15510	.04050
14.721	31.044	.59950	7.56580	1.88230	.00080	.00000	5.72550	-4.98170	.70230	.16230	.02990
14.728	46.344	.59940	6.54430	1.88790	-.00130	.00000	5.71610	-4.98100	.71630	.16740	.02510
14.727	60.991	.59900	5.56340	1.90280	-.00830	.00000	5.70940	-4.98780	.72530	.16970	.02040
	GRADIENT	.00000	.00000	.00000	.00000	.00000	.00000	.00000	.00000	.00000	.00000

CA20 747/1 01 S1 ORBITER DATA (BGN064) (20 JAN 75)

REFERENCE DATA

SREF = 2690.0000 SQ.FT. XMRP = 1109.0000 IN.XO
LREF = 474.8100 IN. YMRP = .0000 IN.YO
BREF = 936.6800 IN. ZMRP = 375.0000 IN.ZO
SCALE = .0300

PARAMETRIC DATA

ALPHAC =	4.000	BETAC =	-5.000
ELV-IB =	.000	ELV-OB =	3.000
ELEVON =	5.000	MACH =	.600
BETAO =	.000	PHI =	.000
DX =	20.000	DY =	.000

RUN NO. 670/ 0 RN/L = 3.30 GRADIENT INTERVAL = -1.00/ 4.00

ALPHAO	DZ	MACH	DX	DY	BETAO	PHI	ALPHAH	BETA	CL	CD	CLM
10.318	3.700	.60010	20.41600	2.83640	.02060	.00000	5.84730	-4.99440	.38470	.07330	.01850
10.322	6.553	.59970	20.22210	2.83310	.01590	.00000	5.84340	-4.98620	.38890	.07430	.01320
10.343	11.191	.60090	19.89920	2.84400	.01170	.00000	5.84120	-4.99390	.41110	.07660	.01350
10.354	18.631	.59990	19.38810	2.84640	.00640	.00000	5.83970	-4.98650	.43040	.07960	.01400
10.379	33.918	.60090	18.33430	2.85720	.00180	.00000	5.83370	-4.98860	.45990	.08460	.01350
10.388	48.230	.60020	17.34840	2.86390	-.00110	.00000	5.82690	-4.98840	.48010	.08730	.01060
	GRADIENT	.00000	.00000	.00000	.00000	.00000	.00000	.00000	.00000	.00000	.00000

RUN NO. 671/ 0 RN/L = 3.30 GRADIENT INTERVAL = -1.00/ 4.00

ALPHAO	DZ	MACH	DX	DY	BETAO	PHI	ALPHAH	BETA	CL	CD	CLM
14.501	7.815	.60010	18.90670	2.72590	.01240	.00000	5.86040	-4.98530	.63840	.13650	.03660
14.504	11.048	.60020	18.68440	2.72740	.00960	.00000	5.85980	-4.99660	.64550	.13880	.03520
14.508	15.518	.60040	18.37820	2.73100	.00590	.00000	5.85870	-4.98820	.65780	.14180	.03170
14.516	22.987	.60090	17.86830	2.73860	.00130	.00000	5.85070	-4.98950	.67200	.14770	.02930
14.524	38.017	.59990	16.83330	2.74690	.00110	.00000	5.84180	-4.98930	.69300	.15540	.02560
14.529	52.676	.60080	15.82050	2.76460	-.00420	.00000	5.83510	-4.98920	.70280	.16140	.02270
14.527	68.431	.60030	14.73000	2.77580	-.01180	.00000	5.83000	-4.98910	.71270	.16390	.01920
	GRADIENT	.00000	.00000	.00000	.00000	.00000	.00000	.00000	.00000	.00000	.00000

CA20 747/1 01 SI ORBITER DATA (BGN065) (20 JAN 75)

REFERENCE DATA

SREF = 2690.0000 SQ.FT. XMRP = 1109.0000 IN.XO
LREF = 474.8100 IN. YMRP = .0000 IN.YO
BREF = 936.6900 IN. ZMRP = 375.0000 IN.ZO
SCALE = .0300

PARAMETRIC DATA

ALPHAC = 8.000 BETAC = -5.000
ELV-IB = .000 ELV-OB = 3.000
ELEVON = 5.000 MACH = .600
BETAO = .000 PHI = .000
DX = .000 DY = .000

RUN NO. 650/ 0 RN/L = 3.23 GRADIENT INTERVAL = -1.00/ 4.00

ALPHAO	DZ	MACH	DX	DY	BETAO	PHI	ALPHAW	BETA	CL	CD	CLM
10.285	-2.880	.59910	-.68300	.97220	.09130	.00000	9.73440	-4.98470	.19420	.05090	.06240
10.303	.275	.59920	-1.10310	1.02140	.06460	.00000	9.73380	-4.98020	.24340	.05620	.04650
10.329	4.787	.59920	-1.71740	1.07390	.03930	.00000	9.73230	-4.98730	.28380	.06170	.03990
10.368	12.206	.59950	-2.73470	1.11610	.01850	.00000	9.72900	-4.97920	.33270	.06840	.03450
10.440	27.766	.59990	-4.89330	1.15250	-.00010	.00000	9.72430	-4.97340	.40460	.07940	.02810
10.469	42.705	.60000	-6.96630	1.16390	-.00170	.00000	9.71690	-4.98020	.44570	.08600	.02250
10.475	47.740	.59940	-7.66500	1.16600	-.00340	.00000	9.71310	-4.97990	.45580	.08740	.02070
	GRADIENT	.00000	.00000	.00000	.00000	.00000	.00000	.00000	.00000	.00000	.00000

RUN NO. 651/ 0 RN/L = 3.22 GRADIENT INTERVAL = -1.00/ 4.00

ALPHAO	DZ	MACH	DX	DY	BETAO	PHI	ALPHAW	BETA	CL	CD	CLM
14.666	-.982	.60030	-2.00400	.90170	.06040	.00000	9.76620	-4.94790	.49950	.11730	.09880
14.656	2.094	.60050	-2.41440	.94080	.04440	.00000	9.76530	-4.94600	.53760	.12170	.07280
14.666	6.577	.60090	-3.02330	.98050	.02720	.00000	9.75850	-4.94030	.56670	.12690	.06260
14.686	14.365	.60070	-4.09400	1.02280	.01090	.00000	9.75280	-4.98110	.60080	.13670	.05550
14.713	29.395	.60010	-6.16750	1.06310	-.00360	.00000	9.73960	-4.98140	.65360	.15090	.04350
14.725	44.077	.59950	-8.20840	1.07780	-.00530	.00000	9.73030	-4.98880	.68130	.16060	.03540
	GRADIENT	.00007	-.13343	.01271	-.00520	.00000	-.00029	.00062	.01239	.00143	-.00845

CA20 747/1 01 SI ORBITER DATA (BGH066) (20 JAN 75)

REFERENCE DATA

SREF = 2690.0000 SQ.FT. XMRP = 1109.0000 IN.XO
LREF = 474.8100 IN. YMRP = .0000 IN.YO
BREF = 936.6900 IN. ZMRP = 375.0000 IN.ZO
SCALE = .0300

PARAMETRIC DATA

ALPHAC = 8.000 BETAC = -5.000
ELV-IB = .000 ELV-OB = 3.000
ELEVON = 5.000 MACH = .600
BETAO = .000 PHI = .000
DX = 10.000 DY = .000

RUN NO. 690/ 0 RN/L = 3.24 GRADIENT INTERVAL = -1.00/ 4.00

ALPHAO	DZ	MACH	DX	DY	BETAO	PHI	ALPHAW	BETA	CL	CD	CLM
10.206	-2.705	.59930	9.36200	1.88080	.07970	.00000	9.73680	-4.99820	.18330	.04860	.03860
10.219	.329	.60060	8.95250	1.90700	.06110	.00000	9.73590	-4.97970	.22470	.05270	.02480
10.243	4.772	.60000	8.34240	1.94530	.04190	.00000	9.73540	-4.98670	.25980	.05700	.02170
10.288	12.369	.60000	7.29150	1.98070	.02420	.00000	9.73300	-4.98620	.30880	.06340	.01950
10.356	27.344	.59990	5.21050	2.01480	.00890	.00000	9.73050	-4.99540	.37910	.07450	.01940
10.397	42.540	.59940	3.09140	2.02090	.00630	.00000	9.72630	-4.98720	.42600	.08160	.01620
10.407	48.511	.60000	2.25840	2.02640	.00300	.00000	9.72420	-4.98700	.43910	.08380	.01530
	GRADIENT	.00000	.00000	.00000	.00000	.00000	.00000	.00000	.00000	.00000	.00000

RUN NO. 689/ 0 RN/L = 3.25 GRADIENT INTERVAL = -1.00/ 4.00

ALPHAO	DZ	MACH	DX	DY	BETAO	PHI	ALPHAW	BETA	CL	CD	CLM
14.592	-.448	.59960	7.86760	1.78020	.05410	.00000	9.76400	-4.95400	.46940	.10850	.07110
14.594	2.908	.60010	7.41550	1.81260	.04180	.00000	9.76290	-4.95290	.50610	.11250	.05280
14.610	7.309	.60030	6.81330	1.84130	.03010	.00000	9.75780	-4.95500	.53220	.11720	.04870
14.636	14.529	.60000	5.81930	1.88240	.01770	.00000	9.75460	-4.99580	.56970	.12540	.04570
14.677	29.855	.59980	3.70390	1.90670	.00380	.00000	9.74490	-4.98070	.63450	.14160	.03710
14.699	44.920	.59970	1.61150	1.92310	.00160	.00000	9.73540	-5.00370	.67070	.15220	.03110
14.711	59.693	.60060	-.45210	1.93410	-.00650	.00000	9.73180	-4.98710	.69300	.15920	.02590
	GRADIENT	.00015	-.13472	.00965	-.00367	.00000	-.00033	.00033	.01123	.00119	-.00545

ORIGINAL PAGE IS
OF POOR QUALITY

CA20 747/1 01 SI ORBITER DATA (BOH087) (20 JAN 78)

REFERENCE DATA

SREF = 2690.0000 SQ.FT. XHRP = 1109.0000 IN.XO
LREF = 474.8100 IN. YHRP = .0000 IN.YO
BREF = 936.6800 IN. ZHRP = 375.0000 IN.ZO
SCALE = .0300

PARAMETRIC DATA

ALPHAC = 8.000 BETAC = -5.000
ELV-IB = .000 ELV-OB = 3.000
ELEVON = 5.000 MACH = .600
BETAO = .000 PHI = .000
DX = 20.000 DY = .000

RUN NO. 673/ 0 RN/L = 3.29 GRADIENT INTERVAL = -1.00/ 4.00

ALPHAO	OZ	MACH	DX	DY	BETAO	PHI	ALPHAW	BETA	CL	CD	CLM
10.219	-1.170	.60040	19.17340	2.82560	.05290	.00000	9.73230	-4.99720	.20460	.04980	.01230
10.227	1.973	.59930	18.74300	2.83210	.03910	.00000	9.73270	-4.98830	.23790	.05270	.00270
10.253	6.418	.60050	18.12870	2.85480	.02700	.00000	9.73250	-4.99490	.26550	.05700	.00530
10.286	13.777	.59970	17.11080	2.87030	.01650	.00000	9.73000	-4.98660	.30590	.06310	.00960
10.356	28.938	.60080	14.99660	2.88840	.00590	.00000	9.72870	-4.98820	.37480	.07320	.01180
10.397	44.164	.59940	12.87230	2.89650	.00370	.00000	9.72290	-4.98800	.42030	.08060	.01270
10.406	49.620	.59970	12.11340	2.89960	.00120	.00000	9.71950	-4.98780	.43160	.08260	.01290
	GRADIENT	.00000	.00000	.00000	.00000	.00000	.00000	.00000	.00000	.00000	.00000

RUN NO. 672/ 0 RN/L = 3.28 GRADIENT INTERVAL = -1.00/ 4.00

ALPHAO	OZ	MACH	DX	DY	BETAO	PHI	ALPHAW	BETA	CL	CD	CLM
14.374	1.887	.59920	17.50970	2.70460	.03430	.00000	9.75470	-4.95350	.46800	.10370	.03650
14.386	5.002	.59960	17.08360	2.71260	.02630	.00000	9.75110	-4.94660	.48970	.10730	.03240
14.403	9.317	.60070	16.48890	2.74660	.01890	.00000	9.75120	-4.98660	.51350	.11210	.03250
14.432	16.929	.60030	15.44000	2.76710	.01050	.00000	9.74480	-4.99520	.55240	.11950	.03290
14.474	32.128	.60020	13.33650	2.77920	.00190	.00000	9.73740	-4.98090	.61390	.13380	.03100
14.499	46.955	.60020	11.26920	2.78500	-.00180	.00000	9.73650	-4.98880	.65370	.14450	.02770
14.362	60.738	.60070	9.37410	2.79800	-.00980	.00000	9.72720	-4.98790	.67750	.15000	.02460
	GRADIENT	.00000	.00000	.00000	.00000	.00000	.00000	.00000	.00000	.00000	.00000

CA20 747/1 01 S1 ORBITER DATA (BGN068) (20 JAN 75)

REFERENCE DATA

SREF =	2690.0000 SQ.FT.	XMRP =	1109.0000 IN.XO		
LREF =	474.8100 IN.	YMRP =	.0000 IN.YO		
BREF =	936.6800 IN.	ZMRP =	375.0000 IN.ZO		
SCALE =	.0300				

PARAMETRIC DATA

ALPHAC =	4.000	BETAC =	-5.000
ELV-IB =	.000	ELV-OB =	3.000
ELEVON =	5.000	MACH =	.600
BETAO =	.000	PHI =	.000
DX =	.000	DY =	10.000

RUN NO. 776/ 0 RN/L = 3.29 GRADIENT INTERVAL = -1.00/ 4.00

ALPHAO	DZ	MACH	DX	DY	BETAO	PHI	ALPHAH	BETA	CL	CD	CLM
10.526	-1.143	.60050	.82500	11.02580	.03330	.00000	5.82390	-4.98300	.43230	.08240	.05050
10.516	1.191	.59940	.66590	11.02200	.03310	.00000	5.82210	-4.98350	.43980	.08200	.04150
10.514	5.570	.59990	.36930	11.02810	.02930	.00000	5.81590	-4.98570	.44960	.08170	.03460
10.520	13.286	.59990	-.15620	11.04100	.01980	.00000	5.81020	-4.97390	.46230	.08340	.03150
10.530	28.364	.59970	-1.18290	11.06950	.00500	.00000	5.80160	-4.99410	.48540	.08760	.02630
10.538	43.310	.60020	-2.20400	11.08460	-.00370	.00000	5.79490	-4.99160	.50290	.09010	.02080
10.536	47.055	.60050	-2.45960	11.08530	-.00430	.00000	5.79340	-4.99080	.50490	.09080	.01990
	GRADIENT	.00000	.00000	.00000	.00000	.00000	.00000	.00000	.00000	.00000	.00000

RUN NO. 782/ 0 RN/L = 3.21 GRADIENT INTERVAL = -1.00/ 4.00

ALPHAO	DZ	MACH	DX	DY	BETAO	PHI	ALPHAH	BETA	CL	CD	CLM
14.852	1.732	.59980	-.39120	10.90410	.03150	.00000	5.85610	-4.98030	.70480	.16530	.05350
14.836	4.566	.59980	-.58540	10.91290	.03110	.00000	5.85110	-4.98100	.71020	.16270	.04020
14.828	8.860	.59930	-.88970	10.92830	.02600	.00000	5.84790	-4.97830	.69980	.16200	.04310
14.824	16.510	.59970	-1.41720	10.95100	.01650	.00000	5.83890	-4.98390	.69960	.16340	.04190
14.826	31.452	.59940	-2.44000	10.98190	.00210	.00000	5.82350	-4.99490	.71070	.16810	.03580
14.825	46.606	.59980	-3.48110	11.00070	-.00680	.00000	5.81640	-4.99650	.72230	.17130	.02840
14.822	61.410	.60010	-4.49630	11.01650	-.01520	.00000	5.80690	-4.99090	.72730	.17400	.02310
	GRADIENT	.00000	.00000	.00000	.00000	.00000	.00000	.00000	.00000	.00000	.00000

CA20 747/1 01 SI ORBITER DATA (BGN068) (03 SEP 75)

REFERENCE DATA

SREF = 2690.0000 SQ.FT. XMRP = 1109.0000 IN.XO
LREF = 474.8100 IN. YMRP = .0000 IN.YO
BREF = 936.6800 IN. ZMRP = 375.0000 IN.ZO
SCALE = .0300

PARAMETRIC DATA

ALPHAC =	4.000	BETAC =	-5.000
ELV-IB =	.300	ELV-OB =	3.000
ELEVON =	5.000	MACH =	.600
BETAO =	.000	PHI =	.000
DX =	10.000	DY =	10.000

RUN NO. 0/ 0 RN/L = 3.24 GRADIENT INTERVAL = .00/ 12.00

ALPHAO	DZ	MACH	DX	DY	BETAO	PHI	ALPHAH	BETA	CL	CD	CLM
10.422	-2.280	.60090	10.86020	11.92480	.02940	.00000	5.86230	-4.99080	.38250	.07560	.05270
10.405	1.098	.60050	10.63330	11.90880	.03080	.00000	5.86150	-4.99070	.41140	.07350	.02790
10.409	5.675	.60010	10.31780	11.91340	.02640	.00000	5.85890	-4.99290	.42190	.07430	.02510
10.422	13.013	.60030	9.81090	11.92200	.01880	.00000	5.85720	-4.98880	.44140	.07550	.02150
10.450	28.103	.60030	8.76710	11.94740	.00440	.00000	5.84830	-5.00120	.46850	.07980	.02010
10.460	43.255	.60080	7.71670	11.95920	-.00230	.00000	5.84490	-4.99910	.48720	.08330	.01800
10.461	46.967	.59980	7.46120	11.96490	-.00580	.00000	5.84130	-4.99850	.48990	.08430	.01800
	GRADIENT	-.00009	-.06892	.00100	-.00096	.00000	-.00057	-.00048	.00229	.00017	-.00061

RUN NO. 0/ 0 RN/L = 3.24 GRADIENT INTERVAL = .00/ 12.00

ALPHAO	DZ	MACH	DX	DY	BETAO	PHI	ALPHAH	BETA	CL	CD	CLM
14.683	.236	.60030	9.56110	11.80380	.02130	.00000	5.88610	-4.98800	.66280	.14580	.05420
14.666	3.450	.59990	9.34130	11.79350	.02210	.00000	5.88520	-4.98830	.67680	.14450	.03750
14.666	8.165	.59970	9.01260	11.80250	.01790	.00000	5.88170	-4.98550	.67760	.14540	.03710
14.674	15.415	.60030	8.51160	11.82650	.00960	.00000	5.87290	-4.99850	.68060	.14980	.03950
14.676	30.037	.59960	7.49850	11.85690	-.00230	.00000	5.85430	-5.01000	.69850	.15670	.03210
14.680	45.279	.59970	6.44230	11.87390	-.00980	.00000	5.85630	-5.00360	.71190	.16160	.02720
14.691	60.620	.60010	5.37930	11.89030	-.01810	.00000	5.84740	-4.99860	.71920	.16480	.02300
	GRADIENT	-.00007	-.06922	-.00001	-.00046	.00000	-.00057	.00034	.00174	-.00003	-.00200

ORIGINAL PAGE IS
OF POOR QUALITY

CA20 747/1 01 S1 ORBITER DATA (BGN070) (20 JAN 75)

REFERENCE DATA

SREF = 2690.0000 SQ.FT. XMRP = 1109.0000 IN.XO
LREF = 474.8100 IN. YMRP = .0000 IN.YO
BREF = 936.6800 IN. ZMRP = 375.0000 IN.ZO
SCALE = .0300

PARAMETRIC DATA

ALPHAC = 8.000 BETAC = -5.000
ELV-IB = .000 ELV-OB = 3.000
ELEVON = 5.000 MACH = .600
BETAO = .000 PHI = .000
DX = .000 DY = 10.000

RUN NO. 779/ 0 RN/L = 3.26 GRADIENT INTERVAL = -1.00/ 4.00

ALPHAO	DZ	MACH	DX	DY	BETAO	PHI	ALPHAW	BETA	CL	CD	CLM
10.342	-2.449	.60020	-.70020	11.07990	.03430	.00000	9.67310	-4.96870	.25810	.05560	.03950
10.363	.833	.60030	-1.14560	11.06330	.04050	.00000	9.67390	-4.96980	.29430	.06040	.03720
10.393	5.429	.60090	-1.77560	11.06390	.03940	.00000	9.67190	-4.97940	.31880	.06430	.03800
10.426	12.730	.60070	-2.77410	11.07080	.03250	.00000	9.66910	-4.98290	.35840	.06940	.03440
10.479	27.999	.60040	-4.87390	11.09480	.01510	.00000	9.66510	-4.98470	.41740	.07900	.03150
10.511	42.823	.60060	-6.92000	11.11030	.00500	.00000	9.65760	-4.98200	.45610	.08470	.02480
10.514	46.832	.60080	-7.47470	11.11160	.00269	.00000	9.65660	-4.97380	.46380	.08550	.02250
	GRADIENT	.00000	.00000	.00000	.00000	.00000	.00000	.00000	.00000	.00000	.00000

RUN NO. 786/ 0 RN/L = 3.19 GRADIENT INTERVAL = -1.00/ 4.00

ALPHAO	DZ	MACH	DX	DY	BETAO	PHI	ALPHAW	BETA	CL	CD	CLM
14.727	.234	.59910	-2.11200	10.95930	.03290	.00000	9.69510	-4.97390	.56970	.12530	.05580
14.734	3.279	.60060	-2.52880	10.95100	.03560	.00000	9.69350	-4.97670	.57870	.12760	.05380
14.749	7.626	.60090	-3.12530	10.95380	.03220	.00000	9.68940	-4.98000	.58890	.13080	.05500
14.763	15.024	.60020	-4.13640	10.96820	.02370	.00000	9.68090	-4.97890	.61480	.13640	.05210
14.794	30.355	.60080	-6.23900	10.99580	.00990	.00000	9.67220	-5.00080	.65920	.15080	.04540
14.799	45.083	.59910	-8.26830	11.02160	-.00320	.00000	9.66110	-4.97740	.68490	.15950	.03660
14.813	60.285	.60050	-10.37530	11.04200	-.01020	.00000	9.65630	-4.97420	.69770	.16610	.02970
	GRADIENT	.00049	-.13688	-.00273	.00089	.00000	-.00053	-.00092	.00296	.00076	-.00066

CA20 747/1 01 S1 ORBITER DATA (BGN671) (20 JAN 75)

REFERENCE DATA

SREF =	2690.0000 SQ.FT.	XMRP =	1109.0000 IN.XO
LREF =	474.8100 IN.	YMRP =	.0000 IN.YO
BREF =	936.6900 IN.	ZMRP =	375.0000 IN.ZO
SCALE =	.0300		

PARAMETRIC DATA

ALPHAC =	8.000	BETAC =	-5.000
ELV-IB =	.000	ELV-OB =	3.000
ELEVON =	5.000	MACH =	.600
BETAO =	.000	PHI =	.000
DX =	10.000	DY =	10.000

RUN NO. 740/ 0 RN/L = 3.25 GRADIENT INTERVAL = -1.00/ 4.00

ALPHAO	DZ	MACH	DX	DY	BETAO	PHI	ALPHAH	BETA	CL	CD	CLH
10.224	-3.964	.59950	9.54340	11.98930	.02010	.00000	9.72770	-4.98500	.21570	.04800	.02030
10.249	-1.071	.59930	9.14780	11.96350	.03160	.00000	9.72740	-4.99230	.24500	.05180	.01910
10.273	3.575	.59930	8.51140	11.95450	.03510	.00000	9.72430	-4.99380	.27650	.05540	.01990
10.307	11.249	.59930	7.45290	11.96080	.03020	.00000	9.72660	-5.00460	.31920	.06110	.02170
10.375	26.103	.59980	5.39230	11.98210	.01380	.00000	9.72030	-5.00760	.38210	.07070	.02460
10.407	41.260	.59940	3.28540	11.99630	.00440	.00000	9.71560	-5.00550	.42860	.07710	.02116
10.427	47.378	.59990	2.42810	11.99460	.00110	.00000	9.71350	-4.98920	.44200	.07930	.01990
	GRADIENT	.00000	.00000	.00000	.00000	.00000	.00000	.00000	.00000	.00000	.00000

RUN NO. 741/ 0 RN/L = 3.24 GRADIENT INTERVAL = -1.00/ 4.00

ALPHAO	DZ	MACH	DX	DY	BETAO	PHI	ALPHAH	BETA	CL	CD	CLH
14.548	-1.395	.59950	8.03360	11.85890	.02640	.00000	9.75250	-4.98160	.52020	.10900	.04190
14.553	1.311	.60060	7.66380	11.85090	.02930	.00000	9.75100	-4.99080	.53630	.11130	.03730
14.570	6.124	.60020	7.00200	11.85400	.02630	.00000	9.74500	-5.00250	.55740	.11570	.03750
14.599	13.813	.59960	5.93860	11.85930	.01810	.00000	9.74180	-5.00110	.58450	.12330	.04160
14.637	28.816	.60080	3.86530	11.87690	.00400	.00000	9.73430	-5.00730	.63390	.13640	.03940
14.658	43.625	.60060	1.80890	11.89170	-.00480	.00000	9.72650	-5.00060	.66860	.14720	.03550
14.668	58.608	.60060	-.28100	11.91350	-.01270	.00000	9.72080	-5.00520	.68860	.15450	.02970
	GRADIENT	.00000	.00000	.00000	.00000	.00000	.00000	.00000	.00000	.00000	.00000

CA20 747/1 01 S1 ORBITER DATA (BGN072) (20 JAN 75)

REFERENCE DATA

SREF =	2690.0000 SQ.FT.	XMRP =	1109.0000 IN.XO
LREF =	474.8100 IN.	YMRP =	.0000 IN.YO
BREF =	936.6800 IN.	ZMRP =	375.0000 IN.ZO
SCALE =	.0300		

PARAMETRIC DATA

ALPHAC =	4.000	BETAC =	5.000
ELV-IB =	.000	ELV-OB =	3.000
ELEVON =	5.000	MACH =	.600
BETAO =	.000	PHI =	.000
DX =	.000	DY =	10.000

RUN NO. 777/ 0 RN/L = 3.27 GRADIENT INTERVAL = -1.00/ 4.00

ALPHAO	DZ	MACH	DX	DY	BETAO	PHI	ALPHAW	BETA	CL	CD	CLM
10.561	-1.260	.60020	.82840	8.80620	.04300	.00000	5.82950	5.04410	.41540	.07970	.07970
10.547	1.334	.60070	.65390	8.81240	.03620	.00000	5.82790	5.04880	.42830	.07950	.06430
10.536	5.878	.60010	.34760	8.81490	.03050	.00000	5.82070	5.02710	.44460	.08050	.04980
10.536	13.042	.60030	-.13900	8.81520	.02440	.00000	5.81370	5.02260	.46030	.08350	.04150
10.541	28.032	.60030	-1.15930	8.82060	.01180	.00000	5.80310	5.03420	.48850	.08720	.02880
10.562	43.587	.59990	-2.23230	8.83030	.00450	.00000	5.79570	5.03470	.50470	.09060	.02250
10.545	47.071	.60050	-2.46160	8.83200	.00240	.00000	5.79470	5.03480	.50850	.09090	.02050
	GRADIENT	.00000	.00000	.00000	.00000	.00000	.00000	.00000	.00000	.00000	.00000

RUN NO. 783/ 0 RN/L = 3.21 GRADIENT INTERVAL = -1.00/ 4.00

ALPHAO	DZ	MACH	DX	DY	BETAO	PHI	ALPHAW	BETA	CL	CD	CLM
14.885	1.660	.60010	-.39220	8.87450	.03220	.00000	5.86770	5.00070	.68850	.15740	.08110
14.865	4.767	.59920	-.60980	8.88830	.02700	.00000	5.86470	5.01010	.69020	.15640	.07170
14.851	8.930	.59950	-.89480	8.88570	.02380	.00000	5.85730	5.01040	.69420	.15820	.06110
14.843	16.495	.59930	-1.41200	8.90170	.01680	.00000	5.84480	4.99980	.70530	.16180	.04890
14.833	31.539	.60060	-2.44310	8.92270	.00830	.00000	5.82820	4.97950	.71590	.16920	.03580
14.829	46.682	.60030	-3.48380	8.93760	-.00030	.00000	5 81730	4.98730	.72460	.17220	.02900
14.822	61.660	.59980	-4.51590	8.95050	-.00770	.00000	5.81000	4.98860	.72990	.17430	.02240
	GRADIENT	.00000	.00000	.00000	.00000	.00000	.00000	.00000	.00000	.00000	.00000

CA20 747/1 01 SI ORBITER DATA (BGN073) (30 JUL 75)

REFERENCE DATA

SREF =	2690.0000 SQ.FT.	XMRP =	1109.0000 IN.XO		
LREF =	474.8100 IN.	YMRP =	.0000 IN.YO		
BREF =	936.6800 IN.	ZMRP =	375.0000 IN.ZO		
SCALE =	.0300				

PARAMETRIC DATA

ALPHAC =	4.000	BETAC =	5.000
ELV-IB =	.000	ELV-OB =	3.000
ELEVON =	5.000	MACH =	.600
BETAO =	.000	PHI =	.000
DX =	10.000	DY =	10.000

RUN NO. 743/ 0 RN/L = 3.24 GRADIENT INTERVAL = -1.00/ 4.00

ALPHAO	DZ	MACH	DX	DY	BETAO	PHI	ALPHAH	BETA	CL	CD	CLM
10.456	-2.278	.60010	10.85340	7.94940	.03880	.00000	5.86640	5.03030	.37560	.07060	.07190
10.441	.974	.59990	10.63180	7.95910	.03240	.00000	5.86880	5.01890	.39650	.07020	.05240
10.437	5.632	.60000	10.31420	7.96140	.02670	.00000	5.86360	5.00500	.41470	.07190	.04040
10.440	12.947	.60040	9.81390	7.96130	.02090	.00000	5.85810	5.00010	.43740	.07530	.03170
10.454	28.272	.59990	8.75740	7.96870	.00920	.00000	5.84940	4.99630	.47010	.07980	.02360
10.462	43.215	.59990	7.72040	7.97210	.00210	.00000	5.84560	5.00410	.49070	.08290	.01800
10.464	46.952	.60080	7.46360	7.97530	-.00040	.00000	5.84240	5.00430	.49240	.08400	.01790
	GRADIENT	.00000	.00000	.00000	.00000	.00000	.00000	.00000	.00000	.00000	.00000

RUN NO. 746/ 0 RN/L = 3.23 GRADIENT INTERVAL = -1.00/ 4.00

ALPHAO	DZ	MACH	DX	DY	BETAO	PHI	ALPHAH	BETA	CL	CD	CLM
14.699	.081	.60070	9.55470	8.04510	.01920	.00000	5.89040	5.01680	.63610	.14110	.08300
14.686	3.399	.60090	9.33840	8.04540	.01660	.00000	5.88440	5.01860	.64430	.13900	.07080
14.677	8.089	.59980	9.01760	8.04550	.01310	.00000	5.87840	5.01900	.65940	.14140	.05800
14.677	15.482	.60080	8.51410	8.04890	.00880	.00000	5.86910	5.00690	.67930	.14620	.04650
14.674	30.336	.59920	7.49140	8.06690	.00080	.00000	5.85560	5.00270	.70340	.15540	.03330
14.676	45.437	.59990	6.44350	8.08710	-.00650	.00000	5.84830	4.99500	.71200	.16130	.02930
14.674	60.598	.59920	5.39480	8.09960	-.01450	.00000	5.83970	5.00380	.72060	.16410	.02400
	GRADIENT	.00006	-.06923	.00009	-.00078	.00000	-.00181	.00054	.00247	-.00063	-.00368

CA20 747/1 01 S1 ORBITER DATA (BGN074) (20 JAN 75)

REFERENCE DATA

SREF =	2690.0000 SQ.FT.	XMRP =	1109.0000 IN.XO		
LREF =	474.8100 IN.	YMRP =	.0000 IN.YO		
BREF =	936.6800 IN.	ZMRP =	375.0000 IN.ZO		
SCALE =	.0300				

PARAMETRIC DATA

ALPHAC =	8.000	BETAC =	5.000
ELV-IB =	.000	ELV-OB =	3.000
ELEVON =	5.000	MACH =	.600
BETAO =	.000	PHI =	.000
DX =	.000	DY =	10.000

RUN NO. 778/ 0 RN/L = 3.27 GRADIENT INTERVAL = -1.00/ 4.00

ALPHAO	DZ	MACH	DX	DY	BETAO	PHI	ALPHAW	BETA	CL	CD	CLM
10.386	-2.569	.60000	-.67920	8.78930	.04720	.00000	9.67710	5.05610	.26240	.05510	.07320
10.392	.494	.59990	-1.09610	8.79940	.03450	.00000	9.67430	5.04960	.28350	.05790	.05970
10.404	5.444	.59920	-1.77530	8.79630	.02930	.00000	9.67330	5.02910	.31770	.06270	.04900
10.446	12.879	.60080	-2.79560	8.78530	.02760	.00000	9.67050	5.02490	.36080	.06910	.04130
10.484	27.855	60070	-4.65260	8.77840	.01750	.00000	9.66630	5.03890	.42150	.07880	.03190
10.507	42.785	.60090	-6.91030	8.78230	.01070	.00000	9.65900	5.03980	.45750	.08490	.02580
10.510	46.810	.59970	-7.47130	8.78620	.00720	.00000	9.66000	5.04000	.46300	.08630	.02530
	GRADIENT	.00000	.00000	.00000	.00000	.00000	.00000	.00000	.00000	.00000	.00000

RUN NO. 785/ 0 RN/L = 3.20 GRADIENT INTERVAL = -1.00/ 4.00

ALPHAO	DZ	MACH	DX	DY	BETAO	PHI	ALPHAW	BETA	CL	CD	CLM
14.769	.421	.60000	-2.15370	8.90200	.01960	.00000	9.69950	5.01660	.53640	.12110	.09660
14.763	3.277	.60030	-2.53970	8.89780	.01780	.00000	9.69440	5.00270	.55430	.12400	.08350
14.765	7.611	.60040	-3.12710	8.88370	.01750	.00000	9.68640	4.99670	.57690	.12900	.07240
14.776	14.897	.59960	-4.11930	8.86850	.01660	.00000	9.67900	5.00080	.61040	.13650	.06080
14.801	30.085	.60030	-6.19610	8.86980	.01090	.00000	9.66900	4.98280	.66030	.15040	.04710
14.812	45.241	.60060	-8.28580	8.87710	.00540	.00000	9.66320	4.99950	.68880	.16060	.03720
14.809	60.161	.60050	-10.35530	8.90350	-.00530	.00000	9.65980	4.99330	.70080	.16670	.03030
	GRADIENT	.00011	-.13515	-.00147	-.00063	.00000	-.00179	-.00487	.00627	.00102	-.00459

CA20 747/1 01 S1 ORBITER DATA (BGN075) (20 JAN 75)

REFERENCE DATA

SREF = 2690.0000 SQ.FT. XMRP = 1109.0000 IN.XO
LREF = 474.8100 IN. YMRP = .0000 IN.YO
BREF = 936.6800 IN. ZMRP = 375.0000 IN.ZO
SCALE = .0300

PARAMETRIC DATA

ALPHAC =	8.000	BETAC =	5.000
ELV-IB =	.000	ELV-OB =	3.000
ELEVON =	5.000	MACH =	.600
BETAO =	.000	PHI =	.000
DX =	10.000	DY =	10.000

RUN NO. 744/ 0 RN/L = 3.24 GRADIENT INTERVAL = -1.00/ 4.00

ALPHAO	DZ	MACH	DX	DY	BETAO	PHI	ALPHAH	BETA	CL	CD	CLM
10.291	-4.295	.59990	9.60240	7.92050	.05400	.00000	9.71810	5.02020	.22200	.04570	.05210
10.284	-1.016	.60000	9.14600	7.93820	.03580	.00000	9.72130	5.02130	.24170	.04850	.04440
10.295	3.234	.60090	8.56250	7.93260	.03000	.00000	9.71870	5.02420	.26940	.05260	.03700
10.325	10.653	.60020	7.54070	7.92720	.02580	.00000	9.71900	5.01130	.31670	.05930	.03050
10.391	26.076	.59950	5.40030	7.92620	.01500	.00000	9.71380	5.00840	.38570	.07050	.02700
10.421	40.921	.60020	3.33920	7.93180	.00830	.00000	9.70970	5.00110	.43020	.07690	.02230
10.429	47.381	.59990	2.44250	7.93360	.00400	.00000	9.70550	5.00900	.44380	.07900	.02040
	GRADIENT	.00000	.00000	.00000	.00000	.00000	.00000	.00000	.00000	.00000	.00000

RUN NO. 745/ 0 RN/L = 3.23 GRADIENT INTERVAL = -1.00/ 4.00

ALPHAO	DZ	MACH	DX	DY	BETAO	PHI	ALPHAH	BETA	CL	CD	CLM
14.583	-1.882	.60010	8.09210	8.06760	.01710	.00000	9.74580	5.02630	.48080	.10530	.09170
14.579	1.393	.59950	7.64570	8.06130	.01580	.00000	9.74410	5.01250	.50650	.10770	.07460
14.585	5.736	.60040	7.05370	8.04400	.01390	.00000	9.74010	5.01420	.53650	.11330	.06230
14.601	12.961	.60040	6.06200	8.03060	.01140	.00000	9.73450	5.00960	.57210	.12100	.05460
14.629	28.063	.59950	3.97810	8.02230	.00320	.00000	9.72720	5.00640	.63210	.13530	.04280
14.652	42.937	.60070	1.91620	8.02770	-.00220	.00000	9.71930	4.99930	.66700	.14640	.03720
14.659	57.817	.59950	-.15670	8.04120	-.00950	.00000	9.71390	5.00110	.68980	.15300	.02990
	GRADIENT	.00000	.00000	.00000	.00000	.00000	.00000	.00000	.00000	.00000	.00000

CA20 747/1 01 S1 ORBITER DATA (BGN076) (20 JAN 75)

REFERENCE DATA

SREF = 2690.0000 SQ.FT. XMRP = 1109.0000 IN.XO
LREF = 474.8100 IN. YMRP = .0000 IN.YO
BREF = 936.6800 IN. ZMRP = 375.0000 IN.ZO
SCALE = .0300

PARAMETRIC DATA

ALPHAC =	4.000	BETAC =	-5.000
ELV-IB =	.000	ELV-OB =	3.000
ELEVON =	5.000	MACH =	.600
BETAO =	.000	PHI =	7.500
DX =	.000	DY =	.000

RUN NO. 700/ 0 RN/L = 3.24 GRADIENT INTERVAL = -1.00/ 4.00

ALPHAO	DZ	MACH	DX	DY	BETAO	PHI	ALPHAH	BETA	CL	CD	CLM
10.498	-1.277	.59980	.83250	1.15460	.36450	7.50000	5.83850	-5.05480	.40040	.08020	.06130
10.489	2.021	.60000	.61190	1.18340	.35490	7.50000	5.83680	-5.04370	.41970	.08020	.04600
10.492	6.318	.60080	.32120	1.21560	.34580	7.50000	5.83320	-5.04780	.43340	.08140	.03980
10.500	13.726	.60020	-.18460	1.24350	.33660	7.50000	5.82810	-5.04000	.45430	.08390	.03200
10.510	28.693	.60070	-1.20160	1.27850	.32710	7.50000	5.81510	-5.04710	.48470	.08850	.02270
10.516	43.777	.60040	-2.23760	1.28820	.32620	7.50000	5.80850	-5.04020	.50090	.09150	.01790
10.513	47.275	.59920	-2.47710	1.29290	.32410	7.50000	5.80680	-5.04010	.50510	.09180	.01600
	GRADIENT	.00000	.00000	.00000	.00000	.00000	.00000	.00000	.00000	.00000	.00000

RUN NO. 699/ 0 RN/L = 3.25 GRADIENT INTERVAL = -1.00/ 4.00

ALPHAO	DZ	MACH	DX	DY	BETAO	PHI	ALPHAH	BETA	CL	CD	CLM
14.757	1.908	.59900	-.38000	1.14030	.90370	7.50000	5.86610	-5.05330	.67440	.15910	.06550
14.746	4.533	.59970	-.55960	1.15770	.89700	7.50000	5.86300	-5.04270	.67730	.15900	.05960
14.741	9.089	.59940	-.87360	1.17880	.89010	7.50000	5.85990	-5.04130	.68300	.16030	.05170
14.736	16.707	.59880	-1.39390	1.20160	.88280	7.50000	5.84940	-5.04330	.69330	.16430	.04260
14.734	31.718	.60020	-2.41740	1.22950	.87480	7.50000	5.83020	-5.04070	.71290	.17020	.03030
14.739	46.644	.59920	-3.44230	1.23390	.87190	7.50000	5.81970	-5.04800	.72560	.17180	.02690
14.739	61.610	.60030	-4.47430	1.24610	.86560	7.50000	5.81480	-5.03960	.73270	.17350	.02210
	GRADIENT	.00000	.00000	.00000	.00000	.00000	.00000	.00000	.00000	.00000	.00000

CA20 747/1 01 SI ORBITER DATA (BGN077) (20 JAN 75)

REFERENCE DATA

SREF =	2690.0000 SQ.FT.	XMRP =	1109.0000 IN.XO
LREF =	474.8100 IN.	YMRP =	.0000 IN.YO
BREF =	936.6800 IN.	ZMRP =	375.0000 IN.ZO
SCALE =	.0300		

PARAMETRIC DATA

ALPHAC =	4.000	BETAC =	-5.000
ELV-IB =	.000	ELV-OB =	3.000
ELEVON =	5.000	MACH =	.600
BETAO =	.000	PHI =	7.500
DX =	10.000	DY =	.000

RUN NO. 679/ 0 RN/L = 3.29 GRADIENT INTERVAL = -1.00/ 4.00

ALPHAO	DZ	MACH	DX	DY	BETAO	PHI	ALPHAW	BETA	CL	CD	CLM
10.372	-2.105	.59970	10.86710	2.01610	.34580	7.50000	5.85010	-5.00500	.34070	.07440	.06830
10.367	1.060	.59990	10.65570	2.02110	.34160	7.50000	5.84920	-4.98530	.37610	.07540	.04260
10.367	5.691	.60070	10.34240	2.05170	.33240	7.50000	5.84990	-4.98100	.39820	.07680	.03290
10.369	13.253	.60030	9.82060	2.08120	.32670	7.50000	5.84450	-4.98760	.42570	.07950	.02480
10.411	28.269	.60010	8.78850	2.11400	.31800	7.50000	5.83790	-4.98730	.46410	.08450	.01660
10.422	43.330	.59990	7.75290	2.12730	.31760	7.50000	5.82940	-4.98850	.48400	.08860	.01500
10.423	48.502	.59940	7.39550	2.13120	.31640	7.50000	5.82760	-4.98840	.49020	.08900	.01270
	GRADIENT	.00000	.00000	.00000	.00000	.00000	.00000	.00000	.00000	.00000	.00000

RUN NO. 680/ 0 RN/L = 3.28 GRADIENT INTERVAL = -1.00/ 4.00

ALPHAO	DZ	MACH	DX	DY	BETAO	PHI	ALPHAW	BETA	CL	CD	CLM
14.694	.874	.60040	9.54560	1.96400	.89390	7.50000	5.87640	-4.96580	.62610	.14510	.07800
14.667	4.232	.60010	9.31860	1.98550	.88800	7.50000	5.87720	-4.96930	.64510	.14580	.05810
14.662	8.405	.60050	9.03360	2.01180	.88290	7.50000	5.87440	-4.99210	.65550	.14750	.04960
14.663	16.057	.60090	8.51080	2.03990	.87710	7.50000	5.86600	-4.99860	.67230	.15280	.04090
14.668	30.959	.59980	7.48720	2.05970	.87070	7.50000	5.85230	-4.98160	.69770	.16040	.03130
14.672	45.936	.59930	6.45690	2.06910	.86860	7.50000	5.84070	-4.98100	.71410	.16510	.02530
14.683	61.178	.59910	5.39730	2.08060	.86400	7.50000	5.83590	-4.98820	.72210	.16990	.02200
	GRADIENT	.00000	.00000	.00000	.00000	.00000	.00000	.00000	.00000	.00000	.00000

CA20 747/1 01 51 ORBITER DATA (BGN078) (20 JAN 75)

REFERENCE DATA

SREF =	2690.0000 SQ.FT.	XMRP =	1109.0000 IN.XO		
LREF =	474.8100 IN.	YMRP =	.0000 IN.YO		
BREF =	936.6800 IN.	ZMRP =	375.0000 IN.ZO		
SCALE =	.0300				

PARAMETRIC DATA

ALPHAC =	8.000	BETAC =	-5.000
ELV-IB =	.000	ELV-OB =	3.000
ELEVON =	5.000	MACH =	.600
BETAO =	.000	PHI =	7.500
DX =	.000	DY =	.000

RUN NO. 701/ 0 RN/L = 3.22 GRADIENT INTERVAL = -1.00/ 4.00

ALPHAO	DZ	MACH	DX	DY	BETAO	PHI	ALPHAW	BETA	CL	CD	CLM
10.301	-1.522	.59970	-.83310	1.08330	.39300	7.50000	9.69190	-5.04570	.23760	05310	.04380
10.323	1.720	.59990	-1.27100	1.13320	.37340	7.50000	9.69140	-5.04160	.26780	.05780	.04050
10.358	6.033	.60060	-1.86180	1.18510	.35640	7.50000	9.69140	-5.04760	.30060	.06280	.03800
10.398	15.288	.59980	-3.12410	1.24460	.33730	7.50000	9.68470	-5.03900	.35620	.07130	.03280
10.452	28.550	.60080	-4.95350	1.29230	.32740	7.50000	9.68130	-5.04800	.41340	.07990	.02620
10.485	43.635	.59990	-7.04370	1.31350	.32720	7.50000	9.67630	-5.04730	.45320	.08590	.02010
10.490	47.136	.60050	-7.52840	1.31640	.32660	7.50000	9.67520	-5.03940	.46020	.08720	.01920
	GRADIENT	.00000	.00000	.00000	.00000	.00000	.00000	.00000	.00000	.00000	.00000

RUN NO. 698/ 0 RN/L = 3.31 GRADIENT INTERVAL = -1.00/ 4.00

ALPHAO	DZ	MACH	DX	DY	BETAO	PHI	ALPHAW	BETA	CL	CD	CLM
14.639	1.551	.60080	-2.26150	1.07140	.92630	7.50000	9.67920	-5.05090	.53810	.11820	.06890
14.646	4.440	.59940	-2.65160	1.10830	.91390	7.50000	9.67710	-5.04860	.55670	.12180	.06300
14.662	9.007	.60060	-3.26780	1.14300	.90190	7.50000	9.67380	-5.02670	.58280	.12830	.05680
14.679	16.752	.60000	-4.31660	1.19170	.88790	7.50000	9.66390	-5.05080	.62020	.13800	.04780
14.701	31.559	.60040	-6.33690	1.23600	.87700	7.50000	9.64870	-5.03090	.66360	.15240	.03750
14.713	46.466	.60000	-8.39590	1.26140	.87320	7.50000	9.64450	-5.04770	.68660	.16140	.03190
14.722	61.470	.60040	-10.46660	1.28150	.86640	7.50000	9.63820	-5.04710	.70260	.16640	.02620
	GRADIENT	.00000	.00000	.00000	.00000	.00000	.00000	.00000	.00000	.00000	.00000

CA20 747/1 01 S1 ORBITER DATA (BGN079) (20 JAN 75)

REFERENCE DATA

SREF =	2690.0000 SQ.FT.	XMRP =	1109.0000 IN.XO		
LREF =	474.8100 IN.	YMRP =	.0000 IN.YO		
BREF =	935.6800 IN.	ZMRP =	375.0000 IN.ZO		
SCALE =	.0300				

PARAMETRIC DATA

ALPHAC =	8.000	BETAC =	-5.000
ELV-IB =	.000	ELV-OB =	3.000
ELEVON =	5.000	MACH =	.600
BETAO =	.000	PHI =	7.500
DX =	10.000	DY =	.000

RUN NO. 682/ 0 RN/L = 3.27 GRADIENT INTERVAL = -1.00/ 4.00

ALPHAO	DZ	MACH	DX	DY	BETAO	PHI	ALPHAW	BETA	CL	CD	CLM
10.182	-3.146	.59980	9.44330	1.93780	.37820	7.50000	9.72010	-4.99620	.17010	.04720	.04080
10.201	-.191	.60050	9.04330	1.97280	.36380	7.50000	9.72230	-4.99230	.21510	.05130	.02650
10.223	4.382	.60020	8.42140	2.02160	.34460	7.50000	9.72000	-4.98760	.25350	.05610	.02310
10.263	11.935	.60030	7.38160	2.06800	.32870	7.50000	9.71950	-4.97890	.30140	.06350	.02320
10.337	26.849	.59930	5.31280	2.12680	.31790	7.50000	9.71460	-4.99590	.37680	.07440	.01980
10.377	42.008	.60020	3.20820	2.14560	.31730	7.50000	9.70990	-4.98020	.42650	.08150	.01690
10.398	48.909	.60000	2.23740	2.15750	.31550	7.50000	9.71490	-4.98770	.43860	.08420	.01630
	GRADIENT	.00000	.00000	.00000	.00000	.00000	.00000	.00000	.00000	.00000	.00000

RUN NO. 681/ 0 RN/L = 3.27 GRADIENT INTERVAL = -1.00/ 4.00

ALPHAO	DZ	MACH	DX	DY	BETAO	PHI	ALPHAW	BETA	CL	CD	CLM
14.540	-.899	.60080	7.97090	1.87070	.91980	7.50000	9.74650	-4.97150	.44890	.10530	.07720
14.539	1.681	.60070	7.62670	1.90420	.90820	7.50000	9.74960	-4.96080	.48470	.10890	.05960
14.550	6.191	.59980	7.01630	1.94450	.89580	7.50000	9.74300	-4.94870	.52070	.11400	.05010
14.577	13.668	.60030	5.95450	2.00570	.88320	7.50000	9.73710	-4.98970	.56530	.12280	.04350
14.626	28.859	.60080	3.90510	2.06670	.86940	7.50000	9.72640	-4.99530	.63110	.13930	.03700
14.654	43.807	.60030	1.83050	2.08630	.86880	7.50000	9.72090	-4.99830	.67060	.14990	.03040
14.668	58.633	.59980	-.23580	2.09830	.86650	7.50000	9.71490	-4.98000	.69040	.15700	.02800
	GRADIENT	-.00004	-.13342	.01299	-.00450	.00000	.00120	.00415	.01388	.00140	-.00682

ORIGINAL PAGE IS
OF POOR QUALITY

CA20 747/1 01 S1 ORBITER DATA (BGN080) (20 JAN 75)

REFERENCE DATA

SREF = 2690.0000 SQ.FT. XMRP = 1109.0000 IN.XO
LREF = 474.8100 IN. YMRP = .0000 IN.YO
BREF = 936.6800 IN. ZMRP = 375.0000 IN.ZO
SCALE = .0300

PARAMETRIC DATA

ALPHAC = 4.000 BETAC = -5.000
ELV-IB = .000 ELV-OB = 3.000
ELEVON = 5.000 MACH = .600
BETAO = .000 PHI = 7.500
DX = .000 DY = 10.000

RUN NO. 791/ 0 RN/L = 3.34 GRADIENT INTERVAL = -1.00/ 4.00

ALPHAO	DZ	MACH	DX	DY	BETAO	PHI	ALPHAW	BETA	CL	CD	CLM
10.543	.273	.59960	.69350	11.14360	.36720	7.50000	5.84270	-4.98690	.41120	.08040	.04690
10.537	3.154	.59930	.49810	11.15020	.36560	7.50000	5.84120	-4.97890	.42310	.07960	.03750
10.543	7.602	.60010	.19640	11.16160	.36070	7.50000	5.83540	-4.97360	.43350	.08070	.03440
10.546	14.948	.59920	-.30580	11.18100	.35240	7.50000	5.83280	-4.98370	.44960	.08250	.02990
10.563	30.456	.60020	-1.36340	11.21710	.33670	7.50000	5.82120	-4.98510	.47610	.08730	.02580
10.569	45.266	.59930	-2.38270	11.23800	.33050	7.50000	5.81720	-4.99950	.49730	.08970	.01850
10.573	47.765	.60090	-2.55600	11.24380	.32880	7.50000	5.81590	-4.99680	.49760	.09010	.01830
	GRADIENT	-.00010	-.06781	.00229	-.00056	.00000	-.00052	.00243	.00413	-.00028	-.00326

RUN NO. 792/ 0 RN/L = 3.33 GRADIENT INTERVAL = -1.00/ 4.00

ALPHAO	DZ	MACH	DX	DY	BETAO	PHI	ALPHAW	BETA	CL	CD	CLM
14.693	2.086	.60000	-.37990	11.08210	.90280	7.50000	5.87000	-4.98910	.70480	.15460	.03610
14.684	4.708	.60010	-.56200	11.09160	.90090	7.50000	5.87020	-4.99190	.70630	.15440	.03010
14.678	9.002	.60060	-.86020	11.10680	.89490	7.50000	5.86130	-4.96840	.70290	.15510	.02870
14.683	16.383	.60070	-1.37540	11.13310	.89490	7.50000	5.85650	-4.99530	.69690	.15790	.03330
14.691	31.443	.59920	-2.41210	11.16780	.87000	7.50000	5.83990	-4.99270	.70530	.16370	.03310
14.694	46.562	.59940	-3.45170	11.18970	.86380	7.50000	5.82940	-4.99250	.71750	.16730	.02700
14.693	61.369	.59950	-4.47690	11.20770	.85570	7.50000	5.82430	-4.98120	.72290	.17010	.02450
	GRADIENT	.00000	.00000	.00000	.00000	.00000	.00000	.00000	.00000	.00000	.00000

CA20 747/1 01 S1 ORBITER DATA (BGN081) (20 JAN 75)

REFERENCE DATA

SREF =	2690.0000 SQ.FT.	XMRP =	1109.0000 IN.XO		
LREF =	474.8100 IN.	YMRP =	.0000 IN.YO		
BREF =	936.6800 IN.	ZMRP =	375.0000 IN.ZO		
SCALE =	.0300				

PARAMETRIC DATA

ALPHAC =	4.000	BETAC =	-5.000
ELV-IB =	.000	ELV-OB =	3.000
ELEVON =	5.000	MACH =	.600
BETAO =	.000	PHI =	7.500
DX =	10.000	DY =	10.000

RUN NO. 752/ 0 RN/L = 3.25 GRADIENT INTERVAL = -1.00/ 4.00

ALPHAO	DZ	MACH	DX	DY	BETAO	PHI	ALPHAH	BETA	CL	CD	CLM
10.346	-1.602	.60090	10.84680	11.99480	.37630	7.50000	5.85440	-4.97960	.39050	.07300	.03100
10.345	1.402	.60060	10.63530	12.00080	.37550	7.50000	5.85520	-4.98010	.40340	.07340	.02430
10.354	5.906	.60020	10.33290	12.01730	.37080	7.50000	5.85220	-4.98920	.41520	.07450	.02380
10.391	13.318	.60050	9.81780	12.03110	.36559	7.50000	5.84870	-4.98360	.43260	.07740	.02370
10.403	28.645	.60020	8.76420	12.06720	.35160	7.50000	5.84180	-4.99350	.46720	.08180	.01960
10.412	43.525	.59940	7.73690	12.08630	.34460	7.50000	5.83600	-4.99070	.48680	.08520	.01710
10.415	47.221	.60020	7.48460	12.08790	.34240	7.50000	5.83250	-4.98240	.49130	.08590	.01590
	GRADIENT	.00000	.00000	.00000	.00000	.00000	.00000	.00000	.00000	.00000	.00000

RUN NO. 755/ 0 RN/L = 3.25 GRADIENT INTERVAL = -1.00/ 4.00

ALPHAO	DZ	MACH	DX	DY	BETAO	PHI	ALPHAH	BETA	CL	CD	CLM
14.608	-.240	.60090	9.64110	11.90700	.92390	7.50000	5.87640	-4.97970	.66840	.14120	.04030
14.598	2.722	.60030	9.43840	11.92140	.92500	7.50000	5.87630	-4.98890	.67880	.14060	.02930
14.593	7.480	.60030	9.11160	11.93390	.92030	7.50000	5.87390	-4.98370	.68730	.14220	.02330
14.598	14.602	.60090	8.62320	11.95990	.91230	7.50000	5.86660	-4.99540	.69590	.14670	.02110
14.613	29.697	.60000	7.57480	12.00060	.89630	7.50000	5.85700	-5.00190	.69780	.15720	.02970
14.617	44.725	.59950	6.53910	12.02150	.88840	7.50000	5.84550	-4.99410	.71210	.16240	.02490
14.621	59.760	.60020	5.50180	12.03780	.88140	7.50000	5.83640	-4.99030	.72250	.16630	.02120
	GRADIENT	-.00020	-.06844	.00486	.00037	.00000	-.00003	-.00311	.00351	-.00020	-.00371

CA20 747/1 01 SI ORBITER DATA (BGN082) (20 JAN 75)

REFERENCE DATA

SREF = 2690.0000 SQ.FT. XMRP = 1109.0000 IN.XO
LREF = 474.8100 IN. YMRP = .0000 IN.YO
BREF = 936.6800 IN. ZMRP = 375.0000 IN.ZO
SCALE = .0300

PARAMETRIC DATA

ALPHAC =	8.000	BETAC =	-5.000
ELV-IB =	.000	ELV-OB =	3.000
ELEVON =	5.000	MACH =	.600
BETAO =	.000	PHI =	7.500
DX =	.000	DY =	10.000

RUN NO. 798/ 0 RN/L = 3.28 GRADIENT INTERVAL = -1.00/ 4.00

ALPHAO	DZ	MACH	DX	DY	BETAO	PHI	ALPHAH	BETA	CL	CD	CLM
10.341	-.270	.60070	-1.00870	11.14970	.35700	7.50000	9.65950	-4.98570	.24910	.05540	.03800
10.486	.652	.59920	-1.21140	11.14280	.37710	7.50000	9.65970	-4.99610	.25090	.05510	.03560
10.365	3.053	.59990	-1.45750	11.15070	.36160	7.50000	9.65670	-4.97910	.27780	.05880	.03520
10.389	7.538	.59980	-2.06810	11.16310	.36060	7.50000	9.65760	-4.98830	.30720	.06290	.03380
10.427	14.849	.60020	-3.06390	11.18630	.35350	7.50000	9.65440	-4.99010	.34740	.06900	.03300
10.498	30.104	.59970	-5.16390	11.23050	.34070	7.50000	9.64830	-4.98980	.40790	.07910	.03000
10.519	44.754	.60050	-7.17850	11.25610	.33340	7.50000	9.64570	-4.98770	.44810	.08480	.02430
10.519	47.323	.60030	-7.52920	11.25990	.33110	7.50000	9.64270	-4.98730	.45300	.08560	.02320
	GRADIENT	-.00013	-.12851	.00090	-.00019	-.00000	-.00092	.00217	.00915	.00113	-.00071

RUN NO. 797/ 0 RN/L = 3.29 GRADIENT INTERVAL = -1.00/ 4.00

ALPHAO	DZ	MACH	DX	DY	BETAO	PHI	ALPHAH	BETA	CL	CD	CLM
14.589	1.523	.59940	-2.24660	11.09770	.90490	7.50000	9.69240	-4.98790	.57030	.11810	.04120
14.599	4.729	.60080	-2.68170	11.10310	.90410	7.50000	9.68750	-4.98930	.58270	.12050	.03840
14.608	8.739	.60080	-3.22950	11.10210	.90100	7.50000	9.68610	-4.97690	.59830	.12540	.03560
14.637	16.314	.59990	-4.26990	11.12770	.89130	7.50000	9.67900	-4.99560	.61440	.13390	.04270
14.668	31.043	.59930	-6.28400	11.17200	.87570	7.50000	9.66570	-4.99090	.65860	.14670	.03790
14.687	46.253	.60030	-8.38190	11.20280	.86730	7.50000	9.65840	-4.99970	.69160	.15670	.03450
14.695	61.364	.60050	-10.46720	11.22980	.85990	7.50000	9.64990	-4.98740	.69780	.16320	.02870
	GRADIENT	.00000	.00000	.00000	.00000	.00000	.00000	.00000	.00000	.00000	.00000

CA20 747/1 01 SI ORBITER DATA (BGH083) [20 JAN 75]

REFERENCE DATA

SREF = 2690.0000 SQ.FT. XMRP = 1109.0000 IN.XO
LREF = 474.8100 IN. YMRP = .0000 IN.YO
BREF = 936.6900 IN. ZMRP = 375.0000 IN.ZO
SCALE = .0300

PARAMETRIC DATA

ALPHAC = 8.000 BETAC = -5.000
ELV-IB = .000 ELV-OB = 3.000
ELEVON = 5.000 MACH = .600
BETAO = .000 PHI = 7.500
DX = 10.000 DY = 10.000

RUN NO. 753/ 0 RN/L = 3.25 GRADIENT INTERVAL = -1.00/ 4.00

ALPHAO	DZ	MACH	DX	DY	BETAO	PHI	ALPHAH	BETA	CL	CD	CLM
10.157	-4.055	.59920	9.58440	12.02470	.35460	7.50000	9.72220	-4.97930	.20540	.04730	.01360
10.183	-1.077	.59910	9.17960	12.01420	.36780	7.50000	9.72250	-4.98720	.23800	.05050	.01290
10.217	3.434	.59910	8.65730	12.01330	.37270	7.50000	9.72190	-4.99040	.26470	.05530	.01850
10.253	10.894	.59950	7.53340	12.03390	.36920	7.50000	9.72090	-4.99020	.31200	.06110	.01930
10.325	26.227	.60000	5.40650	12.07790	.35530	7.50000	9.71850	-4.99130	.38240	.07160	.02130
10.369	40.888	.59980	3.35780	12.10570	.34890	7.50000	9.71180	-4.99700	.42650	.07860	.02060
10.390	47.654	.59990	2.42180	12.11250	.34450	7.50000	9.71230	-4.99090	.44240	.08060	.01830
	GRADIENT	.00000	.00000	.00000	.00000	.00000	.00000	.00000	.00000	.00000	.00000

RUN NO. 754/ 0 RN/L = 3.25 GRADIENT INTERVAL = -1.00/ 4.00

ALPHAO	DZ	MACH	DX	DY	BETAO	PHI	ALPHAH	BETA	CL	CD	CLM
14.464	-1.083	.59930	8.03380	11.93300	.92370	7.50000	9.74720	-4.98020	.52190	.10540	.02850
14.477	1.953	.59970	7.63200	11.94050	.92590	7.50000	9.74680	-4.99710	.53970	.10760	.02500
14.493	6.138	.59980	7.04460	11.94340	.92410	7.50000	9.74430	-4.98480	.56290	.11160	.02320
14.525	13.721	.60080	6.00510	11.95290	.91650	7.50000	9.73740	-4.98940	.59750	.12010	.02500
14.575	28.934	.60020	3.90070	12.00290	.89970	7.50000	9.72870	-4.99460	.64130	.13600	.03170
14.596	44.022	.59940	1.80220	12.03180	.89130	7.50000	9.72270	-4.99150	.67250	.14740	.03030
14.609	58.528	.60060	-.22260	12.06010	.88300	7.50000	9.71910	-4.98690	.68790	.15650	.02940
	GRADIENT	.00000	.00000	.00000	.00000	.00000	.00000	.00000	.00000	.00000	.00000

CA20 747/1 01 S1 ORBITER DATA (BGN084) (20 JAN 75)

REFERENCE DATA

SREF = 2690.0000 SQ.FT. XMRP = 1109.0000 IN.XO
LREF = 474.8100 IN. YMRP = .0000 IN.YO
BREF = 936.6800 IN. ZMRP = 375.0000 IN.ZO
SCALE = .0300

PARAMETRIC DATA

ALPHAC =	4.000	BETAC =	.000
ELV-IB =	.000	ELV-OB =	3.000
ELEVON =	5.000	MACH =	.600
BETAO =	.000	PHI =	7.500
DX =	.000	DY =	.000

RUN NO. 705/ 0 RN/L = 3.19 GRADIENT INTERVAL = -1.00/ 4.00

ALPHAO	DZ	MACH	DX	DY	BETAO	PHI	ALPHAW	BETA	CL	CD	CLM
10.477	-.781	.59990	.78190	.11400	.33540	7.50000	5.94610	-.00740	.40610	.07940	.05800
10.470	1.431	.60020	.62800	.11610	.33470	7.50000	5.94350	-.00560	.41730	.07940	.04770
10.466	6.105	.59930	.30370	.12250	.33340	7.50000	5.93540	-.00330	.43140	.08050	.03890
10.472	13.569	.60000	-.21640	.13300	.33140	7.50000	5.92780	-.00960	.45170	.08320	.03070
10.485	28.308	.59960	-1.25130	.14890	.32590	7.50000	5.91880	-.00190	.47910	.08800	.02380
10.489	43.532	.59950	-2.31820	.15620	.32600	7.50000	5.90860	-.00070	.50010	.09080	.01610
10.498	47.201	.59940	-2.59010	.15820	.32490	7.50000	5.90960	-.00060	.50280	.09150	.01510
	GRADIENT	.00014	-.06913	.00095	-.00032	.00000	-.00110	.00081	.00506	.00000	-.00466

RUN NO. 704/ 0 RN/L = 3.19 GRADIENT INTERVAL = -1.00/ 4.00

ALPHAO	DZ	MACH	DX	DY	BETAO	PHI	ALPHAW	BETA	CL	CD	CLM
15.435	6.448	.59970	-.69570	.16150	.97600	7.50000	5.86270	-.00920	.68020	.16350	.05550
15.428	9.304	.59980	-.89700	.16320	.97380	7.50000	5.85980	-.01440	.67520	.16310	.05550
15.423	12.875	.59960	-1.14210	.16420	.97360	7.50000	5.85340	-.01150	.67880	.16430	.04960
15.412	20.640	.59920	-1.67000	.17050	.96990	7.50000	5.83730	-.00340	.68840	.16820	.04110
15.415	36.108	.60000	-2.72220	.18780	.96590	7.50000	5.81930	-.00920	.70810	.17420	.02830
15.414	50.653	.59970	-3.71920	.19180	.96360	7.50000	5.80820	-.00090	.71540	.17810	.02490
14.600	60.670	.60080	-4.54030	.20570	.84990	7.50000	5.91280	.00730	.72260	.17150	.02150
15.413	65.386	.59960	-4.73040	.20630	.95590	7.50000	5.80070	-.00040	.72080	.17980	.02190
	GRADIENT	.00000	.00000	.00000	.00000	.00000	.00000	.00000	.00000	.00000	.00000

CA20 747/1 01 SI ORBITER DATA (BGN085) (20 JAN 75)

REFERENCE DATA

SREF =	2690.0000 SQ.FT.	XMRP =	1109.0000 IN.XO		
LREF =	474.8100 IN.	YMRP =	.0000 IN.YO		
BREF =	936.6800 IN.	ZMRP =	375.0000 IN.ZO		
SCALE =	.0300				

PARAMETRIC DATA

ALPHAC =	4.000	BETAC =	.000
ELV-IB =	.000	ELV-OB =	3.000
ELEVON =	5.000	MACH =	.600
BETAO =	.000	PHI =	7.500
DX =	10.000	DY =	.000

RUN NO. 686/ 0 RN/L = 3.25 GRADIENT INTERVAL = -1.00/ 4.00

ALPHAO	DZ	MACH	DX	DY	BETAO	PHI	ALPHAH	BETA	CL	CD	CLM
10.398	-1.550	.59990	10.83680	.08910	.32620	7.50000	5.88960	.00820	.36390	.07520	.05060
10.383	1.373	.59990	10.83990	.09070	.32610	7.50000	5.88980	.00850	.38250	.07480	.04380
10.381	5.899	.59950	10.33220	.09770	.32520	7.50000	5.86370	.01110	.40210	.07590	.03230
10.388	13.274	.59930	9.82720	.10370	.32480	7.50000	5.85710	.01310	.42610	.07890	.02440
10.407	28.273	.59950	8.79640	.11890	.31960	7.50000	5.84670	.02070	.46210	.08480	.01750
10.420	43.578	.60000	7.73890	.13010	.31990	7.50000	5.83970	.01420	.48360	.08850	.01410
10.422	48.458	.59940	7.40080	.13490	.31810	7.50000	5.83800	.01410	.48920	.08920	.01260
	GRADIENT	.00000	.00000	.00000	.00000	.00000	.00000	.00000	.00000	.00000	.00000

RUN NO. 685/ 0 RN/L = 3.26 GRADIENT INTERVAL = -1.00/ 4.00

ALPHAO	DZ	MACH	DX	DY	BETAO	PHI	ALPHAH	BETA	CL	CD	CLM
14.697	1.100	.59940	9.54250	.13260	.87920	7.50000	5.89750	-.00300	.63590	.14200	.07620
14.684	4.360	.60060	9.32210	.13590	.87860	7.50000	5.89530	-.00170	.65180	.14230	.05750
14.678	8.649	.60060	9.02890	.13720	.87880	7.50000	5.89960	.01030	.66410	.14510	.04770
14.673	16.184	.59930	8.51060	.15310	.87710	7.50000	5.87810	.00470	.67970	.15120	.03700
14.676	31.896	.60050	7.48510	.17240	.87330	7.50000	5.86330	.00570	.70300	.16000	.02670
14.684	46.169	.60080	6.44000	.16710	.87350	7.50000	5.85290	.01390	.71160	.16660	.02520
14.686	61.197	.59990	5.39690	.18170	.86570	7.50000	5.84650	.01430	.72160	.16930	.02140
	GRADIENT	.00000	.00000	.00000	.00000	.00000	.00000	.00000	.00000	.00000	.00000

CA20 747/1 01 S1 ORBITER DATA (DGN098) (20 JAN 75)

REFERENCE DATA

SREF = 2690.0000 SQ.FT. XMRP = 1109.0000 IN.XO
LREF = 474.8100 IN. YMRP = .0000 IN.YO
BREF = 936.6800 IN. ZMRP = 375.0000 IN.ZO
SCALE = .0300

PARAMETRIC DATA

ALPHAC = 8.000 BETAC = .000
ELV-IB = .000 ELV-OB = 3.000
ELEVON = 5.000 MACH = .600
BETAO = .000 PHI = 7.500
DX = .000 DY = .000

RUN NO. 702/ 0 RN/L = 3.21 GRADIENT INTERVAL = -1.00/ 4.00

ALPHAO	DZ	MACH	DX	DY	BETAO	PHI	ALPHAW	BETA	CL	CD	CLM
10.331	-1.338	.59930	-.84120	.06700	.33000	7.50000	9.69480	-.00030	.24900	.05540	.04940
10.340	1.740	.60000	-1.25560	.07150	.33130	7.50000	9.69390	-.00040	.27690	.05960	.04220
10.363	6.289	.60070	-1.87580	.08170	.33280	7.50000	9.69910	-.00010	.30760	.06370	.03730
10.396	13.806	.60030	-2.90490	.09630	.33230	7.50000	9.69730	.00010	.35200	.07010	.03210
10.462	28.633	.60060	-4.95180	.12610	.32950	7.50000	9.69090	.00860	.41470	.08000	.02590
10.485	43.486	.60040	-7.00390	.14140	.33000	7.50000	9.67620	.00150	.45410	.08580	.01930
10.489	47.086	.59950	-7.50170	.14340	.32810	7.50000	9.67300	.00920	.45770	.08740	.02020
	GRADIENT	.00000	.00000	.00000	.00000	.00000	.00000	.00000	.00000	.00000	.00000

RUN NO. 703/ 0 RN/L = 3.20 GRADIENT INTERVAL = -1.00/ 4.00

ALPHAO	DZ	MACH	DX	DY	BETAO	PHI	ALPHAW	BETA	CL	CD	CLM
14.513	1.005	.60000	-2.17580	.11060	.86690	7.50000	9.72400	-.01250	.54160	.11720	.06430
14.522	4.003	.59990	-2.58520	.11270	.86730	7.50000	9.71980	-.00330	.55600	.12040	.05050
14.535	8.390	.60090	-3.18350	.12190	.86560	7.50000	9.71600	-.00140	.57610	.12610	.05720
14.550	15.842	.59970	-4.20120	.13390	.86250	7.50000	9.70760	-.00040	.61130	.13530	.04870
15.384	35.410	.59990	-6.93850	.15790	.96430	7.50000	9.69510	.00020	.65610	.15560	.03830
15.397	50.740	.60030	-9.05870	.17100	.96420	7.50000	9.68670	.00140	.68040	.16570	.03270
15.398	65.244	.60010	-11.07430	.19330	.95530	7.50000	9.68350	.00140	.69690	.17070	.02620
	GRADIENT	.00000	.00000	.00000	.00000	.00000	.00000	.00000	.00000	.00000	.00000

CA20 747/1 01 SI ORBITER DATA (BGN087) (20 JAN 75)

REFERENCE DATA

SREF = 2690.0000 SQ.FT. XMRP = 1109.0000 IN.XO
LREF = 474.0100 IN. YMRP = .0000 IN.YO
BREF = 936.6800 IN. ZMRP = 375.0000 IN.ZO
SCALE = .0300

PARAMETRIC DATA

ALPHAC = 8.000 BETAC = .000
ELV-IB = .000 ELV-OB = 3.000
ELEVON = 5.000 MACH = .600
BETAO = .000 PHI = 7.500
DX = 10.000 DY = .000

RUN NO. 683/ 0 RN/L = 3.27 GRADIENT INTERVAL = -1.00/ 4.00

ALPHAO	DZ	MACH	DX	DY	BETAO	PHI	ALPHAW	BETA	CL	CD	CLM
10.202	-2.846	.60070	9.42630	.05380	.30970	7.50000	9.72550	.00720	.19200	.05060	.04170
10.212	.552	.60020	8.96280	.05120	.31500	7.50000	9.72650	.01490	.22710	.05320	.02990
10.232	4.877	.60020	8.36990	.05670	.31740	7.50000	9.72560	.01510	.25840	.05720	.02640
10.267	12.472	.59990	7.32440	.07370	.31830	7.50000	9.72090	.00760	.30420	.06480	.02460
10.343	27.592	.59930	5.22440	.09540	.31840	7.50000	9.71640	.02330	.37900	.07460	.01920
10.377	42.546	.60030	3.14850	.11600	.31820	7.50000	9.71420	.01650	.42500	.08170	.01730
10.387	48.934	.60050	2.25910	.12250	.31670	7.50000	9.71250	.01650	.43840	.08400	.01640
	GRADIENT	.00000	.00000	.00000	.00000	.00000	.00000	.00000	.00000	.00000	.00000

RUN NO. 684/ 0 RN/L = 3.26 GRADIENT INTERVAL = -1.00/ 4.00

ALPHAO	DZ	MACH	DX	DY	BETAO	PHI	ALPHAW	BETA	CL	CD	CLM
14.557	-1.221	.59970	8.03810	.07550	.87510	7.50000	9.75080	.00290	.45750	.10720	.08140
14.553	1.801	.59960	7.63010	.08390	.87580	7.50000	9.75280	.00360	.49410	.10900	.05720
14.564	6.393	.59920	7.00370	.08780	.87610	7.50000	9.74630	.01280	.52370	.11420	.05000
14.590	13.965	.59980	5.93410	.10350	.87480	7.50000	9.74190	.01410	.56850	.12260	.04240
14.632	28.717	.60040	3.93720	.13370	.87070	7.50000	9.73190	.01500	.63250	.13850	.03440
14.655	43.772	.59920	1.84850	.14770	.87100	7.50000	9.72470	.01620	.66870	.14970	.03180
14.654	48.457	.59900	1.19850	.14670	.86940	7.50000	9.72120	.02410	.67440	.15159	.03120
14.666	53.011	.59990	.56350	.15680	.86900	7.50000	9.72150	.01640	.68370	.15460	.03000
	GRADIENT	.00000	.00000	.00000	.00000	.00000	.00000	.00000	.00000	.00000	.00000

CA20 747/1 01 S1 ORBITER DATA (BGN088) (20 JAN 75)

REFERENCE DATA

SREF = 2690.0000 SQ.FT. XMRP = 1109.0000 IN.XO
LREF = 474.8100 IN. YMRP = .0000 IN.YO
BREF = 936.6800 IN. ZMRP = 375.0000 IN.ZO
SCALE = .0300

PARAMETRIC DATA

ALPHAC = 4.000 BETAC = .000
ELV-1B = .000 ELV-0B = 3.000
ELEVON = 5.000 MACH = .600
BETAO = .000 PHI = 7.500
DX = .000 DY = 10.000

RUN NO. 790/ 0 RN/L = 3.35 GRADIENT INTERVAL = -1.00/ 4.00

ALPHAO	DZ	MACH	DX	DY	BETAO	PHI	ALPHAW	BETA	CL	CD	CLM
10.555	.254	.60080	.71130	10.12070	.35260	7.50000	5.84990	.00050	.41270	.07860	.05210
10.549	3.398	.59950	.49520	10.11910	.35390	7.50000	5.84950	-.00680	.42220	.07920	.04480
10.551	7.733	.60010	.20180	10.11940	.35340	7.50000	5.84070	.00080	.43200	.08060	.04020
10.556	15.401	.60060	-.31960	10.12750	.35020	7.50000	5.83350	-.00960	.45380	.08210	.03080
10.567	30.165	.60090	-1.32890	10.14530	.33860	7.50000	5.82300	.00410	.47820	.08700	.02520
10.572	45.459	.59920	-2.38060	10.15660	.33400	7.50000	5.81600	.00450	.49650	.08980	.01930
10.573	47.767	.59990	-2.54180	10.16140	.33220	7.50000	5.81730	-.00320	.49880	.09030	.01830
	GRADIENT	-.00041	-.06873	-.00051	.00041	.00000	-.00013	-.00232	.00302	.00019	-.00232

RUN NO. 793/ 0 RN/L = 3.32 GRADIENT INTERVAL = -1.00/ 4.00

ALPHAO	DZ	MACH	DX	DY	BETAO	PHI	ALPHAW	BETA	CL	CD	CLM
14.705	1.985	.60080	-.34990	10.14030	.88850	7.50000	5.86510	-.00700	.70540	.15020	.04180
14.705	4.790	.59970	-.54980	10.14100	.88850	7.50000	5.86030	-.00760	.69450	.15160	.04620
14.694	8.916	.59960	-.83550	10.14240	.88720	7.50000	5.85670	-.00950	.69540	.15260	.04210
14.697	16.371	.59920	-1.34730	10.15560	.88140	7.50000	5.84520	-.00660	.70050	.15680	.03690
14.692	31.267	.60010	-2.36750	10.18500	.87110	7.50000	5.82820	-.01420	.71090	.16350	.03120
14.697	46.547	.59960	-3.41780	10.19680	.86680	7.50000	5.81760	-.01260	.71950	.16780	.02700
14.696	61.277	.59940	-4.42800	10.21090	.85990	7.50000	5.80770	-.00330	.72440	.17040	.02370
	GRADIENT	.00000	.00000	.00000	.00000	.00000	.00000	.00000	.00000	.00000	.00000

CA20 747/1 01 S1 ORBITER DATA (BGN089) (20 JAN 75)

REFERENCE DATA

SREF =	2690.0000 SQ.FT.	XMRP =	1109.0000	IN.XO	
LREF =	474.8100 IN.	YMRP =	.0000	IN.YO	
BREF =	936.6900 IN.	ZMRP =	375.0000	IN.ZO	
SCALE =	.0300				

PARAMETRIC DATA

ALPHAC =	4.000	BETAC =	.000
ELV-IB =	.000	ELV-OB =	3.000
ELEVON =	5.000	MACH =	.600
BETAO =	.000	PHI =	7.500
DX =	10.000	DY =	10.000

RUN NO. 748/ 0 RN/L = 3.31 GRADIENT INTERVAL = -1.00/ 4.00

ALPHAO	DZ	MACH	DX	DY	BETAO	PHI	ALPHAW	BETA	CL	CD	CLM
10.378	-1.632	.60020	10.65360	10.09140	.36670	7.50000	5.85980	.00020	.38770	.07280	.04050
10.387	1.664	.60010	10.62560	10.08940	.36940	7.50000	5.85350	.00820	.40120	.07280	.03280
10.394	6.264	.60010	10.30850	10.09400	.37000	7.50000	5.85260	.00070	.41490	.07420	.02890
10.402	13.375	.60060	9.82330	10.10030	.36640	7.50000	5.84730	-.00140	.43500	.07730	.02480
10.423	28.632	.60090	8.77710	10.11670	.35660	7.50000	5.83630	.00390	.46660	.08230	.02070
10.434	43.693	.60070	7.73850	10.12850	.34900	7.50000	5.82970	.01160	.48550	.08610	.01800
10.431	47.364	.60030	7.48270	10.13340	.34760	7.50000	5.83090	.01190	.49070	.08640	.01550
	GRADIENT	.00000	.00000	.00000	.00000	.00000	.00000	.00000	.00000	.00000	.00000

RUN NO. 751/ 0 RN/L = 3.25 GRADIENT INTERVAL = -1.00/ 4.00

ALPHAO	DZ	MACH	DX	DY	BETAO	PHI	ALPHAW	BETA	CL	CD	CLM
14.603	-.240	.59960	9.65580	10.10520	.91100	7.50000	5.88620	.00130	.66850	.13590	.04510
14.595	2.648	.59970	9.45510	10.10780	.91230	7.50000	5.88670	.00110	.67280	.13580	.03820
14.596	7.191	.59940	9.14070	10.11050	.91150	7.50000	5.88310	-.00120	.67700	.13840	.03660
14.595	14.612	.59970	8.63500	10.12720	.90760	7.50000	5.87400	-.01480	.69790	.14320	.02620
14.603	29.755	.59940	7.59700	10.15000	.89650	7.50000	5.85730	.00120	.70220	.15580	.02950
14.611	44.626	.59900	6.55800	10.17050	.89130	7.50000	5.84810	-.00560	.71400	.16070	.02680
14.611	59.694	.59990	5.51570	10.18640	.89330	7.50000	5.83980	-.00370	.71850	.16430	.02360
	GRADIENT	.00003	-.06948	.00090	.00045	-.00000	.00017	-.00007	.00149	-.00003	-.00239

CA20 747/1 01 S1 ORBITER DATA (BGN090) (20 JAN 75)

REFERENCE DATA

SREF =	2690.0000 SQ.FT.	XMRP =	1109.0000 IN.XO		
LREF =	474.8100 IN.	YMRP =	.0000 IN.YO		
BREF =	936.6800 IN.	ZMRP =	375.0000 IN.ZO		
SCALE =	.0300				

PARAMETRIC DATA

ALPHAC =	8.000	BETAC =	.000
ELV-IB =	.000	ELV-OB =	3.000
ELEVON =	5.000	MACH =	.600
BETAO =	.000	PHI =	7.500
DX =	.000	DY =	10.000

RUN NO. 799/ 0 RN/L = 3.28 GRADIENT INTERVAL = -1.00/ 4.00

ALPHAO	DZ	MACH	DX	DY	BETAO	PHI	ALPHAW	BETA	CL	CD	CLM
10.357	-.035	.60030	-1.02460	10.11350	.32780	7.50000	9.66040	.01350	.25050	.05480	.04490
10.375	3.161	.59960	-1.45630	10.10060	.33860	7.50000	9.65910	.00480	.27780	.05820	.04120
10.396	7.497	.60020	-2.04560	10.09530	.34380	7.50000	9.65930	.00230	.30840	.06210	.03620
10.435	14.798	.60070	-3.04220	10.09790	.34630	7.50000	9.65560	.00100	.34730	.06870	.03590
10.494	29.812	.59910	-5.10530	10.11650	.34030	7.50000	9.64940	.01370	.40930	.07840	.03010
10.518	45.359	.59950	-7.24650	10.13900	.33420	7.50000	9.64690	.00730	.45190	.08420	.02200
10.522	47.338	.60020	-7.51750	10.14290	.33230	7.50000	9.64400	.00760	.45260	.08560	.02380
	GRADIENT	-.00022	-.13509	-.00404	.00338	.00000	-.00041	-.00272	.00854	.00106	-.00116

RUN NO. 796/ 0 RN/L = 3.29 GRADIENT INTERVAL = -1.00/ 4.00

ALPHAO	DZ	MACH	DX	DY	BETAO	PHI	ALPHAW	BETA	CL	CD	CLM
14.594	1.481	.59950	-2.22770	10.14370	.87480	7.50000	9.69560	-.00300	.56400	.11550	.04760
14.602	4.549	.59900	-2.64420	10.13000	.88110	7.50000	9.69070	-.00590	.57930	.11950	.04290
14.617	8.657	.59930	-3.20750	10.11860	.88520	7.50000	9.68790	-.00250	.59120	.12470	.04340
14.642	16.518	.59980	-4.27940	10.12340	.88400	7.50000	9.67930	.00160	.62060	.13300	.04080
14.671	31.266	.59980	-6.30190	10.14970	.87470	7.50000	9.66690	-.00270	.65710	.14660	.03960
14.687	46.167	.60010	-8.35180	10.17100	.86860	7.50000	9.65650	-.00210	.68230	.15610	.03440
14.696	61.030	.60020	-10.40650	10.19280	.86220	7.50000	9.65050	.00750	.69640	.16310	.03020
	GRADIENT	.00000	.00000	.00000	.00000	.00000	.00000	.00000	.00000	.00000	.00000

ORIGINAL PAGE IS
OF POOR QUALITY

CA20 747/1 01 S1 ORBITER DATA (BGN091) (20 JAN 75)

REFERENCE DATA

SREF =	2690.0000 SQ.FT.	XMRP =	1109.0000 IN.XO
LREF =	474.8100 IN.	YMRP =	.0000 IN.YO
BREF =	936.6800 IN.	ZMRP =	375.0000 IN.ZO
SCALE =	.0300		

PARAMETRIC DATA

ALPHAC =	8.000	BETAC =	.000
ELV-IB =	.000	ELV-OB =	3.000
ELEVON =	5.000	MACH =	.600
BETAO =	.000	PHI =	7.500
DX =	10.000	DY =	10.000

RUN NO. 749/ 0 RN/L = 3.28 GRADIENT INTERVAL = -1.00/ 4.00

ALPHAO	DZ	MACH	DX	DY	BETAO	PHI	ALPHAW	BETA	CL	CD	CLM
10.211	-2.473	.60010	9.37070	10.09480	.34320	7.50000	9.73370	.00410	.22140	.04820	.02460
10.231	.684	.59940	8.93780	10.08320	.35240	7.50000	9.73220	.00470	.24480	.05200	.02480
10.254	5.170	.59950	8.32140	10.07530	.36020	7.50000	9.73090	.00260	.27830	.05590	.02200
10.284	12.734	.59930	7.28040	10.07600	.36200	7.50000	9.72830	.00110	.32160	.06230	.02180
10.350	27.679	.59950	5.20360	10.09700	.35550	7.50000	9.72610	.00560	.38690	.07250	.02250
10.390	42.827	.59970	3.09470	10.11470	.35150	7.50000	9.71980	.00660	.43030	.07930	.02010
10.396	47.827	.60050	2.39640	10.12240	.34830	7.50000	9.72100	.00690	.44080	.08140	.01930
	GRADIENT	.00000	.00000	.00000	.00000	.00000	.00000	.00000	.00000	.00000	.00000

RUN NO. 750/ 0 RN/L = 3.26 GRADIENT INTERVAL = -1.00/ 4.00

ALPHAO	DZ	MACH	DX	DY	BETAO	PHI	ALPHAW	BETA	CL	CD	CLM
14.469	-1.845	.59970	8.15120	10.11780	.89550	7.50000	9.75910	.00240	.51460	.10040	.03450
14.469	1.617	.59960	7.67690	10.10740	.90290	7.50000	9.75970	.00250	.53650	.10380	.02920
14.487	6.361	.60050	7.02750	10.09550	.90700	7.50000	9.75520	.01360	.56450	.11010	.02600
14.517	13.973	.60060	5.97980	10.09910	.90650	7.50000	9.74700	.00160	.59640	.11930	.02730
14.559	28.740	.60010	3.93560	10.12300	.89680	7.50000	9.73940	.00370	.64610	.13470	.02710
14.582	41.006	.59970	2.22730	10.13620	.89270	7.50000	9.73390	-.00330	.66580	.14490	.03140
14.586	42.477	.60050	2.02840	10.13900	.89110	7.50000	9.72820	-.00310	.66810	.14620	.03140
14.596	58.866	.59920	-.26060	10.16340	.88240	7.50000	9.72500	-.00120	.69180	.15460	.02620
	GRADIENT	.00000	.00000	.00000	.00000	.00000	.00000	.00000	.00000	.00000	.00000

CA20 747/1 01 S1 ORBITER DATA (BGN092) (20 JAN 75)

REFERENCE DATA

SREF = 2690.0000 SQ.FT. XMRP = 1109.0000 IN.XO
LREF = 474.8100 IN. YMRP = .0000 IN.YO
BREF = 936.6800 IN. ZMRP = 375.0000 IN.ZO
SCALE = .0300

PARAMETRIC DATA

ALPHAC =	4.000	BETAC =	5.000
ELV-IB =	.000	ELV-OB =	3.000
ELEVON =	5.000	MACH =	.600
BETAO =	.000	PHI =	7.500
DX =	.000	DY =	10.000

RUN NO. 789/ 0 RN/L = 3.37 GRADIENT INTERVAL = -1.00/ 4.00

ALPHAO	DZ	MACH	DX	DY	BETAO	PHI	ALPHAW	BETA	CL	CD	CLM
10.577	-.150	.59980	.72100	8.96510	.36680	7.50000	5.64990	4.98850	.39940	.07900	.07220
10.565	3.389	.60030	.48160	8.98960	.36070	7.50000	5.84670	4.98640	.41540	.07920	.05650
10.564	7.766	.60060	.18390	8.97340	.35770	7.50000	5.83930	4.98560	.42890	.08070	.04700
10.561	15.573	.59950	-.34810	8.97980	.35300	7.50000	5.83440	4.96720	.45190	.08260	.03540
10.569	30.037	.59900	-1.33700	8.99030	.34320	7.50000	5.82300	4.97980	.47720	.08670	.02660
10.574	45.241	.60010	-2.37860	9.00170	.33720	7.50000	5.81630	4.98170	.49770	.09000	.01900
10.574	47.768	.59970	-2.55590	9.00290	.33650	7.50000	5.81790	4.98180	.50000	.08980	.01840
	GRADIENT	.00014	-.06764	.00127	-.00172	-.00000	-.00090	-.00059	.00452	.00006	-.00444

RUN NO. 794/ 0 RN/L = 3.31 GRADIENT INTERVAL = -1.00/ 4.00

ALPHAO	DZ	MACH	DX	DY	BETAO	PHI	ALPHAW	BETA	CL	CD	CLM
14.741	1.968	.59930	-.37430	9.07530	.89280	7.50000	5.86070	5.00420	.67700	.15130	.07640
14.723	4.532	.59980	-.55020	9.07210	.89060	7.50000	5.85950	5.00880	.68310	.15020	.06410
14.712	8.966	.60060	-.85330	9.07150	.88960	7.50000	5.85570	5.01510	.69200	.15180	.05060
14.701	16.604	.59970	-1.37350	9.08220	.88480	7.50000	5.84130	5.00370	.70440	.15580	.03860
14.695	31.346	.60060	-2.38170	9.10610	.87490	7.50000	5.82510	5.00290	.71560	.16360	.03030
14.699	46.695	.59970	-3.43760	9.11960	.86940	7.50000	5.81480	4.99540	.72100	.16770	.02730
14.698	61.405	.60010	-4.45100	9.13090	.86330	7.50000	5.80750	5.00490	.72380	.17110	.02310
	GRADIENT	.00000	.00000	.00000	.00000	.00000	.00000	.00000	.00000	.00000	.00000

CA20 747/1 01 S1 ORBITER DATA (BGN093) (20 JAN 75)

REFERENCE DATA

SREF =	2690.0000 SQ.FT.	XMRP =	1109.0000 IN.XO		
LREF =	474.8100 IN.	YMRP =	.0000 IN.YO		
BREF =	938.6800 IN.	ZMRP =	375.0000 IN.ZO		
SCALE =	.0300				

PARAMETRIC DATA

ALPHAC =	4.000	BETAC =	5.000
ELV-IB =	.000	ELV-OB =	3.000
ELEVON =	5.000	MACH =	.600
BETAO =	.000	PHI =	7.500
DX =	10.000	DY =	10.000

RUN NO. 756/ 0 RN/L = 3.27 GRADIENT INTERVAL = -1.00/ 4.00

ALPHAO	DZ	MACH	DX	DY	BETAO	PHI	ALPHAW	BETA	CL	CD	CLM
10.407	-1.572	.60030	10.83100	8.07640	.37780	7.50000	5.85840	4.98230	.37420	.07200	.06350
10.397	1.296	.60000	10.63690	8.07760	.37490	7.50000	5.85760	4.98060	.39180	.07220	.04890
10.396	5.872	.60080	10.32570	8.08270	.37180	7.50000	5.85460	4.97180	.41210	.07340	.03720
10.403	13.650	.60030	9.79170	8.08480	.36790	7.50000	5.85130	4.96920	.43630	.07710	.02900
10.415	28.531	.59970	8.76850	8.09390	.35840	7.50000	5.84310	4.97310	.46680	.08240	.02290
10.423	43.642	.60020	7.72630	8.10690	.35200	7.50000	5.83760	4.97480	.48900	.08530	.01720
10.426	47.246	.60080	7.47400	8.11120	.34990	7.50000	5.83890	4.97490	.49150	.08650	.01750
	GRADIENT	.00000	.00000	.00000	.00000	.00000	.00000	.00000	.00000	.00000	.00000

RUN NO. 759/ 0 RN/L = 3.24 GRADIENT INTERVAL = -1.00/ 4.00

ALPHAO	DZ	MACH	DX	DY	BETAO	PHI	ALPHAW	BETA	CL	CD	CLM
14.648	-.347	.60040	9.63370	8.18350	.91470	7.50000	5.88520	4.98300	.62450	.13890	.09120
14.628	2.762	.60080	8.42610	8.18750	.91280	7.50000	5.87930	4.97890	.64170	.13820	.06950
14.615	7.144	.59940	9.12810	8.18710	.91230	7.50000	5.87670	4.97800	.66430	.13930	.05000
14.606	14.929	.59920	8.60060	8.19200	.90870	7.50000	5.86460	4.97460	.69040	.14410	.03260
14.610	29.445	.59910	7.60310	8.22120	.90000	7.50000	5.85130	4.96530	.71060	.15490	.02370
14.615	44.674	.59940	6.55210	8.23570	.89450	7.50000	5.83930	4.96520	.71660	.16200	.02310
14.618	59.607	.59920	5.51130	8.25220	.88490	7.50000	5.83790	4.97470	.72160	.16610	.02250
	GRADIENT	.00013	-.06677	.00129	-.00061	.00000	-.00190	-.00132	.00553	-.00023	-.00698

CA20 747/1 01 S1 ORBITER DATA (BGN094) (20 JAN 75)

REFERENCE DATA

SREF = 2690.0000 SQ.FT. XMRP = 1109.0000 IN.XO
LREF = 474.8100 IN. YMRP = .0000 IN.YO
BREF = 936.6800 IN. ZMRP = 375.0000 IN.ZO
SCALE = .0300

PARAMETRIC DATA

ALPHAC =	8.000	BETAC =	5.000
ELV-IB =	.000	ELV-OB =	3.000
ELEVON =	5.000	MACH =	.600
BETAO =	.000	PHI =	7.500
DX =	.000	DY =	10.000

RUN NO. 600/ 0 RN/L = 3.28 GRADIENT INTERVAL = -1.00/ 4.00

ALPHAO	DZ	MACH	DX	DY	BETAO	PHI	ALPHAW	BETA	CL	CD	CLM
10.383	-.121	.59930	-1.02330	8.91870	.34720	7.50000	9.65660	4.99450	.25460	.05510	.05930
10.394	3.280	.59930	-1.48700	8.91930	.34690	7.50000	9.65730	4.99140	.28020	.05860	.05080
10.408	7.350	.60060	-2.03700	8.91600	.34470	7.50000	9.65340	5.00470	.30750	.06280	.04500
10.448	15.415	.59950	-3.14280	8.91490	.34670	7.50000	9.65240	4.99410	.35390	.06940	.03780
10.505	30.092	.60000	-5.16010	8.92880	.34150	7.50000	9.64660	5.00160	.41170	.07910	.03180
10.523	45.305	.59990	-7.25270	8.94660	.33640	7.50000	9.64150	4.99740	.45060	.08490	.02410
10.526	47.357	.60070	-7.53260	8.94780	.33480	7.50000	9.63940	4.99510	.45470	.08560	.02320
	GRADIENT	.00000	-.13632	.00018	-.00038	.00000	.00021	-.00091	.00753	.00103	-.00250

RUN NO. 795/ 0 RN/L = 3.30 GRADIENT INTERVAL = -1.00/ 4.00

ALPHAO	DZ	MACH	DX	DY	BETAO	PHI	ALPHAW	BETA	CL	CD	CLM
14.609	1.223	.59980	-2.21010	9.06050	.87620	7.50000	9.69330	4.97390	.55100	.11530	.06860
14.604	4.295	.60010	-2.62530	9.04320	.87780	7.50000	9.68930	4.98640	.57130	.11920	.05570
14.610	9.099	.60030	-3.27870	9.02810	.88110	7.50000	9.68390	4.99180	.59480	.12490	.04600
14.633	16.424	.59980	-4.27940	9.03250	.88090	7.50000	9.67580	4.98360	.62310	.13240	.04250
14.673	31.163	.60010	-6.30030	9.04260	.87580	7.50000	9.66440	4.99120	.66070	.14710	.03870
14.686	46.448	.59990	-8.40360	9.06230	.87040	7.50000	9.65340	4.97790	.68660	.15650	.03310
14.699	61.101	.60050	-10.43360	9.08130	.86590	7.50000	9.64950	4.98600	.69830	.16360	.02970
	GRADIENT	.00000	.00000	.00000	.00000	.00000	.00000	.00000	.00000	.00000	.00000

CA20 747/1 01 S1 ORBITER DATA (BGN095) (20 JAN 75)

REFERENCE DATA

SREF =	2690.0000 SQ.FT.	XMRP =	1169.0000 IN.XO		
LREF =	474.8100 IN.	YMRP =	.0000 IN.YO		
BREF =	936.6800 IN.	ZMRP =	375.0000 IN.ZO		
SCALE =	.0300				

PARAMETRIC DATA

ALPHAC =	8.000	BETAC =	5.000
ELV-IB =	.000	ELV-OB =	3.000
ELEVON =	5.000	MACH =	.600
BETAO =	.000	PHI =	7.500
DX =	10.000	DY =	10.000

RUN NO. 757/ 0 RN/L = 3.26 GRADIENT INTERVAL = -1.00/ 4.00

ALPHAO	DZ	MACH	DX	DY	BETAO	PHI	ALPHAW	BETA	CL	CD	CLM
10.229	-2.945	.60060	9.43320	8.02160	.36630	7.50000	9.72940	4.99930	.22160	.04810	.04490
10.238	.916	.59990	8.90030	8.02590	.36290	7.50000	9.72690	4.97780	.24940	.05100	.03450
10.254	5.217	.59920	8.30880	8.02100	.36370	7.50000	9.72940	4.98330	.28080	.05520	.02850
10.286	12.241	.60010	7.33910	8.02610	.36490	7.50000	9.72730	4.98470	.32140	.06180	.02580
10.362	27.582	.60020	5.20990	8.03700	.35920	7.50000	9.72460	4.97830	.39040	.07260	.02300
10.383	42.621	.59970	3.12000	8.05510	.35360	7.50000	9.71610	4.97170	.43300	.07930	.02040
10.385	47.697	.59990	2.41280	8.05700	.35090	7.50000	9.71670	4.97960	.44480	.08100	.01870
	GRADIENT	.00000	.00000	.00000	.00000	.00000	.00000	.00000	.00000	.00000	.00000

RUN NO. 758/ 0 RN/L = 3.26 GRADIENT INTERVAL = -1.00/ 4.00

ALPHAO	DZ	MACH	DX	DY	BETAO	PHI	ALPHAW	BETA	CL	CD	CLM
14.510	-1.170	.60020	8.03630	8.17130	.90250	7.50000	9.75370	4.98380	.49190	.10230	.07320
14.504	1.917	.60050	7.62130	8.16420	.90580	7.50000	9.75550	4.97220	.53370	.10380	.04600
14.507	6.286	.59960	7.02320	8.15640	.90740	7.50000	9.75180	4.96980	.56320	.10950	.03520
14.530	13.848	.60020	5.98650	8.14470	.90720	7.50000	9.74450	4.98360	.60320	.11940	.02780
14.567	29.243	.60030	3.66020	8.15720	.90150	7.50000	9.73420	4.97640	.65540	.13490	.02300
14.594	43.847	.60080	1.82560	8.17000	.89540	7.50000	9.73000	4.97790	.67820	.14670	.02650
14.605	58.656	.60070	-.24170	8.19240	.88780	7.50000	9.72470	4.97150	.69180	.15530	.02710
	GRADIENT	.00000	.00000	.00000	.00000	.00000	.00000	.00000	.00000	.00000	.00000

CA20 747/1 01 S1 ORBITER DATA (BGN096) (20 JAN 75)

REFERENCE DATA

SREF = 2690.0000 SQ.FT. XMRP = 1109.0000 IN.XO
LREF = 474.8100 IN. YMRP = .0000 IN.YO
BREF = 936.6800 IN. ZMRP = 375.0000 IN.ZO
SCALE = .0300

PARAMETRIC DATA

ALPHAC =	4.000	BETAC =	-5.000
ELV-IB =	.000	ELV-OB =	3.000
ELEVON =	5.000	MACH =	.600
BETAO =	-5.000	PHI =	7.500
DX =	.000	DY =	10.000

RUN NO. 804/ 0 RN/L = 3.28 GRADIENT INTERVAL = -1.00/ 4.00

ALPHAO	DZ	MACH	DX	DY	BETAO	PHI	ALPHAW	BETA	CL	CD	CLM
10.581	.639	.59990	.65310	11.60330	-4.90570	7.50000	5.85380	-4.99080	.48590	.08200	.02210
10.577	3.578	.59970	.45410	11.60440	-4.90260	7.50000	5.84720	-4.98280	.49690	.08170	.01310
10.576	7.854	.60050	.16150	11.61590	-4.90650	7.50000	5.84590	-4.97530	.50710	.08210	.00800
10.583	15.309	.60030	-.34730	11.63520	-4.91210	7.50000	5.83640	-4.98310	.52460	.08370	.00260
10.601	30.620	.60070	-1.40130	11.66910	-4.92520	7.50000	5.82710	-4.97290	.55160	.08780	-.00350
10.617	45.347	.60010	-2.42020	11.69410	-4.92890	7.50000	5.81980	-4.97990	.56910	.09080	-.00920
10.614	47.836	.59960	-2.59130	11.69650	-4.93060	7.50000	5.81890	-4.97190	.57060	.09130	-.00970
	GRADIENT	-.00007	-.06770	.00037	.00105	.00000	-.00225	.00269	.00374	-.00010	-.00306

RUN NO. 805/ 0 RN/L = 3.29 GRADIENT INTERVAL = -1.00/ 4.00

ALPHAO	DZ	MACH	DX	DY	BETAO	PHI	ALPHAW	BETA	CL	CD	CLM
14.802	1.971	.60070	-.39910	11.58740	-4.33990	7.50000	5.87880	-4.99520	.73930	.16990	.03900
14.786	4.974	.60090	-.60690	11.58650	-4.33680	7.50000	5.87760	-4.98020	.74250	.16860	.02960
14.775	9.438	.59980	-.91750	11.59210	-4.33820	7.50000	5.87070	-4.97870	.74520	.16920	.02330
14.774	16.557	.60050	-1.40750	11.61020	-4.34400	7.50000	5.86150	-4.99720	.75180	.16990	.01820
14.779	31.753	.60030	-2.45270	11.64460	-4.35890	7.50000	5.84370	-4.99040	.76970	.17480	.00980
14.774	47.052	.60020	-3.50320	11.66200	-4.36560	7.50000	5.82950	-4.99910	.78210	.17850	.00320
14.772	61.438	.59970	-4.49830	11.67880	-4.37510	7.50000	5.82190	-4.97970	.78800	.18010	-.00210
	GRADIENT	.00000	.00000	.00000	.00000	.00000	.00000	.00000	.00000	.00000	.00000

CA20 747/1 01 S1 ORBITER DATA (BGN097) (20 JAN 75)

REFERENCE DATA

SREF = 2690.0000 SQ.FT. XMRP = 1109.0000 IN.XO
LREF = 474.8100 IN. YMRP = .0000 IN.YO
BREF = 936.6800 IN. ZMRP = 375.0000 IN.ZO
SCALE = .0300

PARAMETRIC DATA

ALPHAC =	8.000	BETAC =	-5.000
ELV-IB =	.000	ELV-OB =	3.000
ELEVON =	5.000	MACH =	.600
BETAO =	-5.000	PHI =	7.500
DX =	.000	DY =	10.000

RUN NO. 811/ 0 RN/L = 3.26 GRADIENT INTERVAL = -1.00/ 4.00

ALPHAO	DZ	MACH	DX	DY	BETAO	PHI	ALPHAW	BETA	CL	CD	CLM
10.393	-.093	.59910	-1.05190	11.61180	-4.92370	7.50000	9.67230	-4.99240	.32540	.05780	.01580
10.413	2.882	.60020	-1.45190	11.60080	-4.91330	7.50000	9.67070	-4.97430	.35170	.06050	.01260
10.438	7.530	.59990	-2.00240	11.60720	-4.90870	7.50000	9.66620	-4.97440	.38390	.06470	.00960
10.483	15.189	.60080	-3.13490	11.63100	-4.91100	7.50000	9.66350	-4.97360	.42560	.07070	.00710
10.527	29.943	.59960	-5.16010	11.67380	-4.92360	7.50000	9.65380	-4.97220	.48400	.07940	.00140
10.564	45.352	.60010	-7.29310	11.70260	-4.92950	7.50000	9.65000	-4.97110	.52220	.08530	-.00430
10.586	47.556	.59980	-7.60080	11.70560	-4.93000	7.50000	9.65160	-4.98630	.52620	.08580	-.00500
	GRADIENT	.00037	-.13446	-.00370	.00350	.00000	-.00054	.00272	.00694	.00094	-.00108

RUN NO. 810/ 0 RN/L = 3.26 GRADIENT INTERVAL = -1.00/ 4.00

ALPHAO	DZ	MACH	DX	DY	BETAO	PHI	ALPHAW	BETA	CL	CD	CLM
14.680	.829	.60040	-2.17220	11.58110	-4.34470	7.50000	9.70740	-4.97590	.60870	.12830	.04680
14.694	3.926	.59980	-2.59130	11.58530	-4.33890	7.50000	9.69930	-4.98360	.62560	.13190	.04080
14.700	7.951	.60050	-3.13940	11.59450	-4.33550	7.50000	9.69450	-4.98390	.64340	.13600	.03630
14.711	15.864	.59950	-4.22030	11.60190	-4.33950	7.50000	9.68490	-4.97770	.67360	.14480	.03000
14.732	30.777	.59960	-6.27550	11.65440	-4.35420	7.50000	9.67290	-4.97590	.70870	.15890	.02030
14.745	45.232	.60020	-8.26290	11.67750	-4.36110	7.50000	9.66090	-4.98040	.73930	.16690	.01170
14.748	60.426	.59990	-10.26960	11.69300	-4.37020	7.50000	9.59040	-4.96340	.75690	.17190	.00380
	GRADIENT	-.00026	-.13531	.00136	.00187	-.00000	-.00262	-.00249	.00546	.00116	-.00194

CA20 747/1 01 SI ORBITER DATA (BGN098) (20 JAN 75)

REFERENCE DATA

SREF =	2690.0000 SQ.FT.	XMRP =	1109.0000 IN.XO		
LREF =	474.8100 IN.	YMRP =	.0000 IN.YO		
BREF =	936.6800 IN.	ZMRP =	375.0000 IN.ZO		
SCALE =	.0300				

PARAMETRIC DATA

ALPHAC =	4.000	BETAC =	.000
ELV-IB =	.000	ELV-OB =	3.000
ELEVON =	5.000	MACH =	.600
BETAO =	-5.000	PHI =	7.500
DX =	.000	DY =	10.000

RUN NO. 803/ 0 RN/L = 3.29 GRADIENT INTERVAL = -1.00/ 4.00

ALPHAO	DZ	MACH	DX	DY	BETAO	PHI	ALPHAH	BETA	CL	CD	CLM
10.589	.754	.59940	.66640	10.56860	-4.90970	7.50000	5.84440	-.00200	.49380	.07850	.02190
10.581	3.682	.59900	.46860	10.56500	-4.90860	7.50000	5.84070	.00000	.50220	.07870	.01450
10.585	7.812	.60050	.18690	10.57170	-4.91050	7.50000	5.83450	.00530	.51250	.08040	.00860
10.587	15.159	.60020	-.31050	10.58790	-4.91080	7.50000	5.82350	.00350	.52770	.08240	.00320
10.599	28.483	.60030	-1.22300	10.59810	-4.92080	7.50000	5.81450	-.00380	.55110	.08720	-.00270
10.609	45.607	.60050	-2.39880	10.61570	-4.92840	7.50000	5.80530	.00550	.56990	.09120	-.00890
10.609	47.846	.60020	-2.55520	10.61480	-4.92850	7.50000	5.80650	.00660	.57250	.09140	-.00970
	GRADIENT	-.00014	-.06755	-.00123	.00038	.00000	-.00126	.00068	.00287	.00007	-.00253

RUN NO. 806/ 0 RN/L = 3.28 GRADIENT INTERVAL = -1.00/ 4.00

ALPHAO	DZ	MACH	DX	DY	BETAO	PHI	ALPHAH	BETA	CL	CD	CLM
14.807	2.070	.60080	-.39660	10.63100	-4.34420	7.50000	5.86990	.00990	.75220	.16680	.03710
14.795	5.158	.60030	-.60460	10.62780	-4.34220	7.50000	5.88820	.01080	.75100	.16560	.03020
14.785	9.244	.59960	-.88860	10.62780	-4.34200	7.50000	5.88130	.00310	.75270	.16640	.02430
14.782	17.214	.60030	-1.43520	10.62940	-4.34560	7.50000	5.86420	.01620	.75930	.16970	.01770
14.782	31.661	.59940	-2.42680	10.65410	-4.35590	7.50000	5.84360	.01300	.77300	.17500	.00980
14.778	47.097	.60050	-3.49310	10.66870	-4.36210	7.50000	5.83380	.01160	.78420	.17890	.00290
14.777	61.842	.60050	-4.52010	10.68370	-4.37040	7.50000	5.83040	.02120	.78960	.18090	-.00270
	GRADIENT	.00000	.00000	.00000	.00000	.00000	.00000	.00000	.00000	.00000	.00000

CA20 747/1 01 SI ORBITER DATA (BGN099) (20 JAN 75)

REFERENCE DATA

SREF =	2690.0000 SQ.FT.	XMRP =	1109.0000 IN.XO		
LREF =	474.8100 IN.	YMRP =	.0000 IN.YO		
BREF =	936.6800 IN.	ZMRP =	375.0000 IN.ZO		
SCALE =	.0300				

PARAMETRIC DATA

ALPHAC =	8.000	BETAC =	.000
ELV-IB =	.000	ELV-OB =	3.000
ELEVON =	5.000	MACH =	.600
BETAO =	-5.000	PHI =	7.500
DX =	.000	DY =	10.000

RUN NO. 812/ 0 RN/L = 3.26 GRADIENT INTERVAL = -1.00/ 4.00

ALPHAO	DZ	MACH	DX	DY	BETAO	PHI	ALPHAW	BETA	CL	CD	CLM
10.406	-.598	.60000	-.96780	10.55670	-4.93340	7.50000	9.67260	-.00310	.32760	.05430	.02200
10.423	3.005	.60030	-1.45270	10.54650	-4.92570	7.50000	9.66800	-.00510	.35800	.05900	.01470
10.446	7.573	.60010	-2.07700	10.53970	-4.91900	7.50000	9.66960	-.00850	.38720	.06340	.01130
10.488	15.463	.60050	-3.15600	10.53870	-4.91500	7.50000	9.66200	-.00260	.42890	.06970	.00800
10.541	30.172	.59930	-5.18260	10.56410	-4.91980	7.50000	9.65470	.00010	.48420	.07860	.00240
10.563	44.995	.59930	-7.22310	10.59760	-4.92660	7.50000	9.64680	.00120	.52130	.08480	-.00370
10.567	47.483	.60010	-7.43590	10.59970	-4.92750	7.50000	9.64790	.00120	.52750	.08550	-.00490
	GRADIENT	.00008	-.13458	-.00283	.00214	.00000	-.00128	-.00083	.00844	.00130	-.00203

RUN NO. 809/ 0 RN/L = 3.27 GRADIENT INTERVAL = -1.00/ 4.00

ALPHAO	DZ	MACH	DX	DY	BETAO	PHI	ALPHAW	BETA	CL	CD	CLM
14.690	.680	.60010	-2.20570	10.62000	-4.36030	7.50000	9.78690	.00160	.60770	.12520	.05210
14.694	3.883	.59920	-2.61840	10.61290	-4.35390	7.50000	9.78560	-.00800	.62560	.12930	.04370
14.701	8.089	.59980	-3.18440	10.60340	-4.34950	7.50000	9.77680	.00430	.64510	.13480	.03800
14.719	15.576	.60050	-4.22500	10.60120	-4.34600	7.50000	9.76790	-.00550	.67590	.14370	.03080
14.734	30.598	.59970	-6.31890	10.63630	-4.35490	7.50000	9.75500	-.00450	.70950	.15820	.02080
14.751	45.433	.60000	-8.38220	10.65290	-4.36030	7.50000	9.74330	-.00010	.74030	.16650	.01200
14.752	60.072	.59990	-10.42840	10.66490	-4.36690	7.50000	9.73740	.00180	.75800	.17160	.00450
	GRADIENT	-.00030	-.13742	-.00236	.00213	.00000	-.00043	-.00320	.00596	.00137	-.00280

CA20 747/1 01 SI ORBITER DATA (BGN100) (20 JAN 75)

REFERENCE DATA

SREF = 2690.0000 SQ.FT. XMRP = 1109.0000 IN.XO
LREF = 474.8100 IN. YMRP = .0000 IN.YO
BREF = 936.6800 IN. ZMRP = 375.0000 IN.ZO
SCALE = .0300

PARAMETRIC DATA

ALPHAC =	4.000	BETAC =	5.000
ELV-IB =	.000	ELV-OB =	3.000
ELEVON =	5.000	MACH =	.600
BETAO =	-5.000	PHI =	7.500
DX =	.000	DY =	10.000

RUN NO. 802/ 0 RN/L = 3.31 GRADIENT INTERVAL = -1.00/ 4.00

ALPHAO	DZ	MACH	DX	DY	BETAO	PHI	ALPHAW	BETA	CL	CD	CLM
10.632	.542	.60000	.66220	9.42040	-4.89370	7.50000	5.84060	4.96470	.47180	.07670	.05760
10.612	3.385	.60040	.47030	9.42520	-4.89960	7.50000	5.83720	4.97190	.48770	.07730	.03800
10.597	7.664	.60000	.18040	9.43110	-4.90530	7.50000	5.83210	4.98920	.50640	.08030	.01930
10.597	15.623	.60080	-.35820	9.44230	-4.91010	7.50000	5.82130	4.96770	.52800	.08420	.00700
10.604	30.599	.59980	-1.38180	9.45100	-4.91870	7.50000	5.81040	4.98430	.55310	.08810	-.00180
10.607	45.321	.60010	-2.38970	9.46750	-4.92620	7.50000	5.80330	4.97660	.56940	.09130	-.00790
10.608	47.816	.59960	-2.56310	9.47050	-4.92700	7.50000	5.80230	4.98460	.57070	.09210	-.00880
	GRADIENT	.00014	-.06749	.00169	-.00207	-.00000	-.00120	.00253	.00556	.00021	-.00689

RUN NO. 807/ 0 RN/L = 3.28 GRADIENT INTERVAL = -1.00/ 4.00

ALPHAO	DZ	MACH	DX	DY	BETAO	PHI	ALPHAW	BETA	CL	CD	CLM
14.862	2.028	.59920	-.39040	9.55980	-4.33510	7.50000	5.85930	4.97110	.73660	.16510	.07560
14.831	4.948	.60030	-.58900	9.55940	-4.33560	7.50000	5.85320	4.97710	.74280	.16390	.05540
14.807	9.169	.60040	-.87690	9.56420	-4.33950	7.50000	5.84700	4.98400	.75160	.16620	.03760
14.793	16.781	.59910	-1.40070	9.56640	-4.34260	7.50000	5.83710	4.98590	.76120	.17000	.02280
14.783	31.685	.59990	-2.41640	9.57980	-4.35320	7.50000	5.81770	4.99680	.77540	.17540	.01120
14.782	46.800	.60030	-3.45430	9.59590	-4.35650	7.50000	5.80680	4.99200	.78510	.17910	.00340
14.777	61.869	.60060	-4.49120	9.60740	-4.35720	7.50000	5.80130	4.99120	.79000	.18090	-.00280
	GRADIENT	.00000	.00000	.00000	.00000	.00000	.00000	.00000	.00000	.00000	.00000

ORIGINAL PAGE IS
OF POOR QUALITY

CA20 747/1 01 S1 ORBITER DATA (BGN101) (20 JAN 75)

REFERENCE DATA

SREF =	2690.0000 SQ.FT.	XMRP =	1109.0000 IN.XO		
LREF =	474.8100 IN.	YMRP =	.0000 IN.YO		
BREF =	936.6800 IN.	ZMRP =	375.0000 IN.ZO		
SCALE =	.0300				

PARAMETRIC DATA

ALPHAC =	8.000	BETAC =	5.000
ELV-IB =	.000	ELV-OB =	3.000
ELEVON =	5.000	MACH =	.600
BETAO =	-5.000	PHI =	7.500
DX =	.000	DY =	10.000

RUN NO. 813/ 0 RN/L = 3.25 GRADIENT INTERVAL = -1.00/ 4.00

ALPHAO	DZ	MACH	DX	DY	BETAO	PHI	ALPHAW	BETA	CL	CD	CLM
10.452	-.442	.59950	-1.00350	9.33640	-4.90170	7.50000	9.67500	5.00340	.32080	.05260	.05220
10.446	3.090	.59940	-1.48320	9.34360	-4.90830	7.50000	9.67640	4.99520	.35400	.05800	.03110
10.457	7.446	.59950	-2.07650	9.33990	-4.90990	7.50000	9.67680	5.00300	.38550	.06280	.02020
10.492	15.406	.60030	-3.16620	9.35320	-4.91170	7.50000	9.67040	4.98840	.42980	.07010	.01170
10.544	30.322	.59990	-5.21950	9.36460	-4.91660	7.50000	9.66170	5.00330	.48780	.07910	.00340
10.555	44.966	.60030	-7.24190	9.38730	-4.92340	7.50000	9.65900	4.99650	.52340	.08500	-.00290
10.568	47.470	.59940	-7.59050	9.39030	-4.92370	7.50000	9.65730	4.99660	.52740	.08570	-.00420
	GRADIENT	-.00003	-.13580	.00204	-.00187	-.00000	.00040	-.00232	.00940	.00153	-.00597

RUN NO. 808/ 0 RN/L = 3.28 GRADIENT INTERVAL = -1.00/ 4.00

ALPHAO	DZ	MACH	DX	DY	BETAO	PHI	ALPHAW	BETA	CL	CD	CLM
14.737	1.500	.59960	-2.26980	9.52040	-4.34530	7.50000	9.70840	4.96760	.60630	.12620	.07850
14.727	4.732	.59970	-2.70730	9.51530	-4.34640	7.50000	9.70310	4.97450	.62770	.13020	.05960
14.725	9.125	.60070	-3.30300	9.50860	-4.34710	7.50000	9.69750	4.99770	.65190	.13690	.04570
14.735	16.820	.59920	-4.35290	9.50260	-4.34540	7.50000	9.68820	4.98480	.68470	.14570	.03360
14.755	31.671	.60060	-6.39490	9.52470	-4.35200	7.50000	9.67960	4.98700	.72430	.15950	.02160
14.761	46.564	.60030	-8.45280	9.53750	-4.35700	7.50000	9.67160	4.99740	.74870	.16720	.01190
14.756	61.712	.60010	-10.55320	9.56010	-4.36580	7.50000	9.66500	4.98810	.76280	.17330	.00390
	GRADIENT	.00000	.00000	.00000	.00000	.00000	.00000	.00000	.00000	.00000	.00000

CA20 747/1 01 S1 ORBITER DATA (BGN102) (20 JAN 75)

REFERENCE DATA

SREF = 2690.0000 SQ.FT. XMRP = 1109.0000 IN.XO
LREF = 474.8100 IN. YMRP = .0000 IN.YO
BREF = 936.6800 IN. ZMRP = 375.0000 IN.ZO
SCALE = .0300

PARAMETRIC DATA

ALPHAC = 4.000 BETAC = -5.000
ELV-IB = .000 ELV-OB = 3.000
ELEVON = 5.000 MACH = .600
BETAO = -5.000 PHI = 7.500
DX = .000 DY = 10.000

RUN NO. 815/ 0 RN/L = 3.26 GRADIENT INTERVAL = -1.00/ 4.00

ALPHAO	DZ	MACH	DX	DY	BETAO	PHI	ALPHAW	BETA	CL	CD	CLM
14.790	1.983	.60070	-.39550	11.56920	-4.33750	7.50000	5.87520	-4.98760	.74080	.16940	.03770
14.773	4.801	.60000	-.59210	11.57770	-4.33630	7.50000	5.87430	-4.98050	.74320	.16850	.02920
14.771	9.259	.59970	-.88880	11.57700	-4.33780	7.50000	5.86980	-4.96350	.75060	.16670	.02430
14.770	16.962	.60030	-1.42840	11.59840	-4.34500	7.50000	5.86010	-4.97990	.75880	.16840	.01870
14.773	31.562	.60000	-2.43150	11.62830	-4.35920	7.50000	5.84300	-4.97290	.77630	.17310	.01070
14.769	46.760	.60020	-3.47550	11.64520	-4.36560	7.50000	5.82880	-4.97390	.78700	.17630	.00400
14.768	61.866	.60010	-4.51840	11.66000	-4.37310	7.50000	5.82040	-4.97220	.79400	.17870	-.00180
	GRADIENT	.00000	.00000	.00000	.00000	.00000	.00000	.00000	.00000	.00000	.00000

CA20 747/1 01 S1 ORBITER DATA (BGN103) (20 JAN 75)

REFERENCE DATA

SREF = 2690.0000 SQ.FT. XMRP = 1109.0000 IN.XO
LREF = 474.8100 IN. YMRP = .0000 IN.YO
BREF = 936.6800 IN. ZMRP = 375.0000 IN.ZO
SCALE = .0300

PARAMETRIC DATA

ALPHAC = 4.000 BETAC = .000
ELV-IB = .000 ELV-OB = 3.000
ELEVON = 5.000 MACH = .600
BETAO = -5.000 PHI = 7.500
DX = .000 DY = 10.000

RUN NO. 814/ 0 RN/L = 3.24 GRADIENT INTERVAL = -1.00/ 4.00

ALPHAO	DZ	MACH	DX	DY	BETAO	PHI	ALPHAW	BETA	CL	CD	CLM
14.793	2.161	.60000	-.39170	10.63030	-4.34420	7.50000	5.88550	-.01290	.75120	.16650	.03610
14.782	5.231	.59970	-.60470	10.62790	-4.34280	7.50000	5.87880	-.01210	.75110	.16570	.02920
14.771	9.123	.59920	-.87590	10.62870	-4.34290	7.50000	5.87490	-.02000	.75250	.16640	.02380
14.766	16.756	.59950	-1.40020	10.62590	-4.34500	7.50000	5.86050	-.01430	.75880	.16900	.01740
14.769	31.625	.60020	-2.41880	10.65530	-4.35690	7.50000	5.83930	-.02550	.77390	.17490	.00950
14.767	46.769	.60020	-3.46380	10.66050	-4.36120	7.50000	5.82970	-.01910	.78390	.17760	.00270
14.766	61.571	.59980	-4.49070	10.67110	-4.36830	7.50000	5.82390	-.00940	.78950	.17950	-.00320
	GRADIENT	.00000	.00000	.00000	.00000	.00000	.00000	.00000	.00000	.00000	.00000

CA20 747/1 01 S1 ORBITER DATA (BOH104) (20 JAN 75)

REFERENCE DATA

SREF =	2690.0000 SQ.FT.	XMRP =	1109.0000 IN.XO		
LREF =	474.8100 IN.	YMRP =	.0000 IN.YO		
BREF =	936.6800 IN.	ZMRP =	375.0000 IN.ZO		
SCALE =	.0300				

PARAMETRIC DATA

ALPHAC =	4.000	BETAC =	-5.000
ELV-IB =	.000	ELV-OB =	3.000
ELEVON =	5.000	MACH =	.600
BETAO =	-5.000	PHI =	.000
DX =	10.000	DY =	.000

RUN NO. 830/ 0 RN/L = 3.29 GRADIENT INTERVAL = -1.00/ 4.00

ALPHAO	DZ	MACH	DX	DY	BETAO	PHI	ALPHAW	BETA	CL	CD	CLM
10.325	-1.343	.60050	10.81020	2.27280	-5.21650	.00000	5.82520	-4.95370	.35140	.06170	.05120
10.312	1.825	.60080	10.60190	2.28000	-5.21910	.00000	5.82640	-4.94080	.39040	.06350	.02090
10.306	6.300	.60070	10.30090	2.29610	-5.22500	.00000	5.82270	-4.94040	.41810	.06570	.00300
10.313	13.660	.60000	9.78720	2.31560	-5.23200	.00000	5.81650	-4.94080	.44500	.06930	-.00630
10.331	28.680	.60030	8.77630	2.34420	-5.24080	.00000	5.80760	-4.95590	.47970	.07520	-.01310
10.341	43.681	.60040	7.73970	2.34160	-5.24020	.00000	5.79800	-4.93970	.50080	.07910	-.01670
	GRADIENT	.00000	.00000	.00000	.00000	.00000	.00000	.00000	.00000	.00000	.00000

RUN NO. 835/ 0 RN/L = 3.27 GRADIENT INTERVAL = -1.00/ 4.00

ALPHAO	DZ	MACH	DX	DY	BETAO	PHI	ALPHAW	BETA	CL	CD	CLM
14.692	1.273	.60040	9.48210	2.19680	-5.18550	.00000	5.85310	-4.95420	.63630	.13170	.06510
14.668	4.371	.60000	9.25780	2.20440	-5.19130	.00000	5.84860	-4.94840	.66030	.13390	.03820
14.657	8.918	.60010	8.95000	2.21850	-5.19620	.00000	5.84580	-4.94910	.67900	.13780	.02100
14.654	16.303	.59960	8.44290	2.24340	-5.20370	.00000	5.83620	-4.94140	.69000	.14440	.01190
14.657	31.560	.59910	7.39910	2.26540	-5.21060	.00000	5.82260	-4.94510	.71090	.15350	.00270
14.663	46.389	.59940	6.38570	2.27270	-5.21250	.00000	5.81290	-4.94850	.72860	.15880	-.00320
14.672	61.453	.59910	5.36270	2.25720	-5.21370	.00000	5.80460	-4.94790	.75000	.15940	-.00650
	GRADIENT	.00000	.00000	.00000	.00000	.00000	.00000	.00000	.00000	.00000	.00000

DATE 01 DEC 75 TABULATED SOURCE DATA - CA20

CA20 747/1 01 S1 ORBITER DATA (BGN105) (20 JAN 75)

REFERENCE DATA

SREF =	2690.0000 SQ.FT.	XMRP =	1109.0000 IN.XO
LREF =	474.8100 IN.	YMRP =	.0000 IN.YO
BREF =	936.6800 IN.	ZMRP =	375.0000 IN.ZO
SCALE =	.0300		

PARAMETRIC DATA

ALPHAC =	8.000	BETAC =	-5.000
ELV-IB =	.000	ELV-OB =	3.000
ELEVON =	5.000	MACH =	.600
BETAO =	-5.000	PHI =	.000
DX =	10.000	DY =	.000

RUN NO. 841/ 0 RN/L = 3.26 GRADIENT INTERVAL = -1.00/ 4.00

ALPHAO	DZ	MACH	DX	DY	BETAO	PHI	ALPHAW	BETA	CL	CD	CLM
10.296	-3.049	.60000	9.37130	2.28520	-5.19050	.00000	9.65170	-5.00970	.19470	.03820	.02390
10.307	-.020	.60070	8.97290	2.29580	-5.19890	.00000	9.65150	-5.00360	.25120	.04590	.00260
10.328	4.578	.59940	8.34450	2.32580	-5.21110	.00000	9.65270	-5.00320	.29140	.05020	-.00600
10.359	12.650	.59930	7.32250	2.35920	-5.22350	.00000	9.65220	-5.01160	.33750	.05650	-.00950
10.437	27.168	.59920	5.23740	2.39020	-5.23710	.00000	9.64590	-5.00940	.40850	.06730	-.01160
10.469	41.992	.60070	3.20170	2.39690	-5.24060	.00000	9.63680	-4.99400	.45240	.07440	-.01370
	GRADIENT	.00000	.00000	.00000	.00000	.00000	.00000	.00000	.00000	.00000	.00000

RUN NO. 836/ 0 RN/L = 3.31 GRADIENT INTERVAL = -1.00/ 4.00

ALPHAO	DZ	MACH	DX	DY	BETAO	PHI	ALPHAW	BETA	CL	CD	CLM
14.545	-.709	.60080	7.91490	2.17100	-5.16670	.00000	9.69170	-4.94920	.46480	.09620	.06340
14.535	2.486	.60040	7.49070	2.19280	-5.17480	.00000	9.68270	-4.94640	.51220	.10420	.03270
14.550	7.114	.60040	6.86490	2.22060	-5.18440	.00000	9.67370	-4.94690	.54550	.10950	.02270
14.571	14.418	.60010	5.87150	2.24480	-5.19520	.00000	9.66760	-4.94090	.59720	.11830	.01580
14.610	29.342	.59920	3.82840	2.27660	-5.20660	.00000	9.66010	-4.94920	.64790	.13260	.00870
14.638	44.463	.60030	1.75100	2.28750	-5.21020	.00000	9.65230	-4.94820	.69750	.14320	.00250
14.650	59.174	.60010	-.27950	2.28950	-5.21320	.00000	9.64650	-4.94020	.71050	.14920	-.00200
	GRADIENT	-.00013	-.13280	.00682	-.00254	.00000	.00031	.00098	.01484	.00250	-.00961

CA20 747/1 01 S1 ORBITER DATA (BGN106) (20 JAN 75)

REFERENCE DATA

SREF = 2690.0000 SQ.FT. XMRP = 1109.0000 IN.XO
LREF = 474.8100 IN. YMRP = .0000 IN.YO
BREF = 936.6800 IN. ZMRP = 375.0000 IN.ZO
SCALE = .0300

PARAMETRIC DATA

ALPHAC = 4.000 BETAC = -5.000
ELV-IB = .000 ELV-OB = 3.000
ELEVON = 5.000 MACH = .600
BETAO = -5.000 PHI = .000
DX = .000 DY = 10.000

RUN NO. 844/ 0 RN/L = 3.30 GRADIENT INTERVAL = -1.00/ 4.00

ALPHAO	DZ	MACH	DX	DY	BETAO	PHI	ALPHAW	BETA	CL	CD	CLM
10.440	-.766	.59920	.77820	11.46600	-5.24580	.00000	5.84320	-4.97280	.41880	.07140	.03980
10.421	2.266	.59970	.58010	11.45390	-5.23960	.00000	5.84170	-4.96410	.44840	.07410	.01250
10.417	6.604	.59950	.28450	11.45320	-5.23900	.00000	5.83810	-4.95640	.46060	.07440	.00400
10.423	14.060	.59930	-.22360	11.46500	-5.24390	.00000	5.82880	-4.96580	.47770	.07610	-.00150
10.442	29.201	.60090	-1.26380	11.49370	-5.25780	.00000	5.82110	-4.98170	.50350	.08000	-.00690
10.451	44.256	.59990	-2.29630	11.50700	-5.26440	.00000	5.81170	-4.98130	.52170	.08310	-.01150
	GRADIENT	.00016	-.06534	-.00399	.00204	.00000	-.00049	.00287	.00976	.00089	-.00900

CA20 747/1 01 S1 ORBITER DATA (BGN107) (20 JAN 75)

REFERENCE DATA

SREF = 2690.0000 SQ.FT. XMRP = 1109.0000 IN.XO
LREF = 474.8100 IN. YMRP = .0000 IN.YO
BREF = 936.6800 IN. ZMRP = 375.0000 IN.ZO
SCALE = .0300

PARAMETRIC DATA

ALPHAC = 4.000 BETAC = -5.000
ELV-IB = .000 ELV-OB = 3.000
ELEVON = 5.000 MACH = .600
BETAO = -5.000 PHI = .000
DX = 10.000 DY = 10.000

RUN NO. 819/ 0 RN/L = 3.26 GRADIENT INTERVAL = -1.00/ 4.00

ALPHAO	DZ	MACH	DX	DY	BETAO	PHI	ALPHAW	BETA	CL	CD	CLM
10.347	-1.294	.60000	10.79930	12.27000	-5.22040	.00000	5.82480	-4.94250	.38030	.06760	.03408
10.332	1.624	.59960	10.60860	12.25380	-5.21300	.00000	5.82770	-4.94090	.41290	.06980	.00860
10.329	6.160	.59980	10.30320	12.25660	-5.21390	.00000	5.82490	-4.94060	.43280	.07030	-.00220
10.340	13.665	.59960	9.79210	12.26900	-5.21780	.00000	5.81970	-4.94960	.45440	.07220	-.00660
10.361	28.609	.60000	8.77050	12.29260	-5.22970	.00000	5.81120	-4.95700	.48560	.07660	-.00990
10.373	43.844	.59970	7.72830	12.30200	-5.23610	.00000	5.80290	-4.94920	.50730	.08010	-.01340
	GRADIENT	.00000	.00000	.00000	.00000	.00000	.00000	.00000	.00000	.00000	.00000

CA20 747/1 01 SI ORBITER DATA (BGN107) (28 JAN 75)

REFERENCE DATA

SREF =	2690.0000 SQ.FT.	XMRP =	1109.0000 IN.XO		
LREF =	474.8100 IN.	YMRP =	.0000 IN.YO		
BREF =	936.6800 IN.	ZMRP =	375.0000 IN.ZO		
SCALE =	.0300				

PARAMETRIC DATA

ALPHAC =	4.000	BETAC =	-5.000
ELV-IB =	.000	ELV-OB =	3.000
ELEVON =	5.000	MACH =	.600
BETAO =	-5.000	PHI =	.000
DX =	10.000	DY =	10.000

RUN NO. 820/ 0 RN/L = 3.25 GRADIENT INTERVAL = -1.00/ 4.00

ALPHAO	DZ	MACH	DX	DY	BETAO	PHI	ALPHAH	BETA	CL	CD	CLH
14.674	2.198	.59990	9.40160	12.14780	-5.18880	.00000	5.84790	-4.94690	.64770	.13890	.04810
14.656	5.136	.59950	9.20660	12.15380	-5.18230	.00000	5.84880	-4.94700	.66950	.13980	.02580
14.650	9.779	.59920	8.89000	12.15850	-5.18330	.00000	5.84540	-4.94080	.68120	.14010	.01680
14.655	17.264	.60090	8.38210	12.17450	-5.18990	.00000	5.83750	-4.94980	.69690	.14360	.01150
14.666	32.135	.60020	7.36720	12.19480	-5.20170	.00000	5.82280	-4.94830	.72050	.15040	.00480
14.669	47.232	.59990	6.32980	12.21060	-5.20820	.00000	5.81630	-4.95250	.73700	.15510	-.00010
14.671	62.086	.60090	5.31850	12.22610	-5.21690	.00000	5.80290	-4.94930	.74580	.15810	-.00510
	GRADIENT	.00000	.00000	.00000	.00000	.00000	.00000	.00000	.00000	.00000	.00000

CA20 747/1 01 SI ORBITER DATA (BGN108) (03 SEP 75)

REFERENCE DATA

SREF =	2690.0000 SQ.FT.	XMRP =	1109.0000 IN.XO		
LREF =	474.8100 IN.	YMRP =	.0000 IN.YO		
BREF =	936.6800 IN.	ZMRP =	375.0000 IN.ZO		
SCALE =	.0300				

PARAMETRIC DATA

ALPHAC =	8.000	BETAC =	-5.000
ELV-IB =	.000	ELV-OB =	3.000
ELEVON =	5.000	MACH =	.600
BETAO =	-5.000	PHI =	.000
DX =	10.000	DY =	10.000

RUN NO. 0/ 0 RN/L = 3.24 GRADIENT INTERVAL = .00/ 12.00

ALPHAO	DZ	MACH	DX	DY	BETAO	PHI	ALPHAH	BETA	CL	CD	CLH
10.102	-2.746	.60020	9.41230	12.35040	-5.23470	.00000	9.67100	-4.96040	.21100	.04120	.00650
10.121	.382	.60070	8.99580	12.32340	-5.21950	.00000	9.67210	-4.96600	.25940	.04700	-.00750
10.146	4.894	.60050	8.38130	12.31250	-5.21220	.00000	9.67360	-4.96550	.29350	.05110	-.00990
10.184	12.419	.59910	7.35250	12.30890	-5.21150	.00000	9.66850	-4.95820	.33780	.05670	-.00900
10.257	27.611	.59910	5.25330	12.33560	-5.22430	.00000	9.66320	-4.97280	.40430	.06650	-.00840
10.295	42.408	.60060	3.20660	12.34990	-5.23390	.00000	9.66060	-4.96480	.44780	.07330	-.00990
	GRADIENT	-.00004	-.13620	-.00242	.00162	.00000	.00033	.00011	.00778	.00091	-.00053

ORIGINAL PAGE IS OF POOR QUALITY

CA20 747/1 01 SI ORBITER DATA (BGN108) (03 SEP 75)

REFERENCE DATA

SREF = 2690.0000 SQ.FT. XMRP = 1109.0000 IN.XO
LREF = 474.8100 IN. YMRP = .0000 IN.YO
BREF = 936.6900 IN. ZMRP = 375.0000 IN.ZO
SCALE = .0300

PARAMETRIC DATA

ALPHAC = 8.000 BETAC = -5.000
ELV-IB = .000 ELV-OB = 3.000
ELEVON = 5.000 MACH = .600
BETAO = -5.000 PHI = .000
DX = 10.000 DY = 10.000

RUN NO. 0/ 0 RN/L = 3.24 GRADIENT INTERVAL = .00/ 12.00

ALPHAO	DZ	MACH	DX	DY	BETAO	PHI	ALPHAW	BETA	CL	CD	CLM
14.529	-.426	.59900	7.87850	12.21900	-5.19280	.00000	9.70100	-4.94840	.50320	.10570	.04030
14.532	2.587	.60000	7.47560	12.21350	-5.18440	.00000	9.69960	-4.94880	.53410	.11020	.02560
14.546	7.236	.59950	6.84400	12.20290	-5.18130	.00000	9.69590	-4.94130	.56240	.11440	.01980
14.574	14.804	.59940	5.81040	12.20650	-5.18370	.00000	9.68990	-4.94590	.59920	.12200	.01700
14.612	29.618	.60010	3.77810	12.23240	-5.19730	.00000	9.68030	-4.95430	.65410	.13500	.01260
14.638	44.620	.59980	1.70940	12.24440	-5.20570	.00000	9.67240	-4.94390	.69240	.14460	.00700
14.647	59.279	.60050	-.31800	12.25590	-5.21300	.00000	9.66660	-4.94210	.71710	.15130	.00040
	GRADIENT	-.00011	-.13586	-.00228	.00067	.00000	-.00080	.00161	.00609	.00090	-.00125

CA20 747/1 01 SI ORBITER DATA (BGN109) (20 JAN 75)

REFERENCE DATA

SREF = 2690.0000 SQ.FT. XMRP = 1109.0000 IN.XO
LREF = 474.8100 IN. YMRP = .0000 IN.YO
BREF = 936.6900 IN. ZMRP = 375.0000 IN.ZO
SCALE = .0300

PARAMETRIC DATA

ALPHAC = 4.000 BETAC = .000
ELV-IB = .000 ELV-OB = 3.000
ELEVON = 5.000 MACH = .600
BETAO = -5.000 PHI = .000
DX = 10.000 DY = .000

RUN NO. 831/ 0 RN/L = 3.27 GRADIENT INTERVAL = -1.00/ 4.00

ALPHAO	DZ	MACH	DX	DY	BETAO	PHI	ALPHAW	BETA	CL	CD	CLM
10.322	-1.388	.59950	10.83060	.35760	-5.24010	.00000	5.82770	.01750	.37600	.06250	.03700
10.306	1.603	.59900	10.83220	.35120	-5.23660	.00000	5.82730	.01740	.40060	.06340	.01450
10.302	6.139	.59980	10.32610	.35200	-5.23390	.00009	5.82560	.01920	.42370	.06550	-.00010
10.313	13.778	.60010	9.80690	.35410	-5.23360	.00000	5.81650	.02270	.44800	.06920	-.00760
10.332	28.819	.60010	8.78170	.36250	-5.23820	.00000	5.80830	.02410	.48220	.07540	-.01410
10.343	43.741	.59970	7.76010	.35160	-5.23650	.00000	5.80220	.02420	.50250	.07920	-.01700
	GRADIENT	.00000	.00000	.00000	.00000	.00000	.00000	.00000	.00000	.00000	.00000

CA20 747/1 01 SI ORBITER DATA (BGN109) (20 JAN 75)

REFERENCE DATA

SREF = 2690.0000 SQ.FT. XMRP = 1109.0000 IN.XO
LREF = 474.8100 IN. YMRP = .0000 IN.YO
BREF = 936.6800 IN. ZMRP = 375.0000 IN.ZO
SCALE = .0300

PARAMETRIC DATA

ALPHAC = 4.000 BETAC = .000
ELV-IB = .000 ELV-OB = 3.000
ELEVON = 5.000 MACH = .600
BETAO = -5.000 PHI = .000
DX = 10.000 DY = .000

RUN NO. 834/ 0 RN/L = 3.28 GRADIENT INTERVAL = -1.00/ 4.00

ALPHAO	DZ	MACH	DX	DY	BETAO	PHI	ALPHAH	BETA	CL	CD	CLM
14.694	.928	.60020	9.50130	.34230	-5.20480	.00000	5.85520	.04520	.64310	.13200	.06260
14.676	3.997	.60080	9.29690	.34420	-5.20390	.00000	5.85320	.04700	.66120	.13240	.04200
14.658	8.486	.60030	8.99580	.35120	-5.20340	.00000	5.84700	.04140	.68210	.13660	.02170
14.660	16.091	.60010	8.47870	.35490	-5.20500	.00000	5.83780	.05340	.70160	.14300	.01080
14.656	31.106	.59990	7.44890	.37940	-5.20880	.00000	5.82070	.05560	.71280	.15330	.00200
14.662	46.023	.60010	6.42710	.37940	-5.20940	.00000	5.81320	.05490	.72970	.15890	-.00340
14.673	60.943	.59930	5.41320	.35910	-5.21050	.00000	5.80510	.06210	.75110	.15940	-.00660
	GRADIENT	.00020	-.06659	.00062	.00029	.00000	-.00065	.00059	.00590	.00013	-.00671

CA20 747/1 01 SI ORBITER DATA (BGN110) (20 JAN 75)

REFERENCE DATA

SREF = 2690.0000 SQ.FT. XMRP = 1109.0000 IN.XO
LREF = 474.8100 IN. YMRP = .0000 IN.YO
BREF = 936.6800 IN. ZMRP = 375.0000 IN.ZO
SCALE = .0300

PARAMETRIC DATA

ALPHAC = 8.000 BETAC = .000
ELV-IB = .000 ELV-OB = 3.000
ELEVON = 5.000 MACH = .600
BETAO = -5.000 PHI = .000
DX = 10.000 DY = .000

RUN NO. 840/ 0 RN/L = 3.28 GRADIENT INTERVAL = -1.00/ 4.00

ALPHAO	DZ	MACH	DX	DY	BETAO	PHI	ALPHAH	BETA	CL	CD	CLM
10.304	-3.802	.60080	9.37460	.38610	-5.26550	.00000	9.65720	.05380	.21700	.04130	.01600
10.306	-.075	.59930	8.99600	.36130	-5.24980	.00000	9.65830	.05400	.25750	.04560	-.00110
10.328	4.516	.59980	8.36210	.34360	-5.23970	.00000	9.65590	.06260	.29260	.04950	-.00690
10.360	12.075	.59940	7.33520	.33740	-5.23350	.00000	9.64850	.06410	.33820	.05590	-.00910
10.425	26.946	.60020	5.29150	.34910	-5.23860	.00000	9.64510	.06470	.40750	.06690	-.01120
10.467	42.070	.59950	3.20180	.35070	-5.23790	.00000	9.64320	.06490	.45240	.07440	-.01320
	GRADIENT	.00000	.00000	.00000	.00000	.00000	.00000	.00000	.00000	.00000	.00000

CA20 747/1 01 S1 ORBITER DATA (BGN110) (20 JAN 75)

REFERENCE DATA

SREF =	2690.0000 SQ.FT.	XMRP =	1109.0000 IN.XO		
LREF =	474.8100 IN.	YMRP =	.0000 IN.YO		
BREF =	936.6800 IN.	ZMRP =	375.0000 IN.ZO		
SCALE =	.0300				

PARAMETRIC DATA

ALPHAC =	8.000	BETAC =	.000
ELV-IB =	.000	ELV-OB =	3.000
ELEVON =	5.000	MACH =	.600
BETAO =	-5.000	PHI =	.000
DX =	10.000	DY =	.000

RUN NO. 837/ 0 RN/L = 3.29 GRADIENT INTERVAL = -1.00/ 4.00

ALPHAO	DZ	MACH	DX	DY	BETAO	PHI	ALPHAW	BETA	CL	CD	CLM
14.301	-2.383	.59980	8.18810	.38570	-5.22010	.00000	9.68140	.00420	.48200	.09710	.05070
14.539	-1.012	.60010	7.96770	.38570	-5.21720	.00000	9.68610	.00410	.48130	.09650	.05090
14.492	1.816	.60010	7.59820	.37440	-5.21070	.00000	9.68190	.00420	.51440	.10300	.03250
14.537	2.114	.60080	7.55200	.37380	-5.21060	.00000	9.68180	.00420	.51440	.10320	.03230
14.547	6.572	.60090	6.95140	.36650	-5.20600	.00000	9.67480	.01540	.54650	.10900	.02160
14.576	14.073	.59990	5.93050	.36460	-5.20440	.00000	9.67030	.01810	.58850	.11810	.01540
14.612	28.194	.60010	3.86470	.37730	-5.20900	.00000	9.66010	.01160	.64850	.13280	.00900
14.641	44.237	.60050	1.79770	.37490	-5.20970	.00000	9.65280	.01810	.68780	.14320	.00290
14.651	58.932	.59980	-.22740	.37670	-5.21130	.00000	9.64550	.01740	.71070	.14930	-.00150
	GRADIENT	.00235	-.15493	-.00201	.00033	.00000	-.00033	.00000	.00000	.00067	-.00067

CA20 747/1 01 S1 ORBITER DATA (BGN111) (20 JAN 75)

REFERENCE DATA

SREF =	2690.0000 SQ.FT.	XMRP =	1109.0000 IN.XO		
LREF =	474.8100 IN.	YMRP =	.0000 IN.YO		
BREF =	936.6800 IN.	ZMRP =	375.0000 IN.ZO		
SCALE =	.0300				

PARAMETRIC DATA

ALPHAC =	4.000	BETAC =	.000
ELV-IB =	.000	ELV-OB =	3.000
ELEVON =	5.000	MACH =	.600
BETAO =	-5.000	PHI =	.000
DX =	.000	DY =	10.000

RUN NO. 843/ 0 RN/L = 3.33 GRADIENT INTERVAL = -1.00/ 4.00

ALPHAO	DZ	MACH	DX	DY	BETAO	PHI	ALPHAW	BETA	CL	CD	CLM
10.446	-.843	.60040	.60510	10.38400	-5.24130	.00000	5.84880	.06030	.43660	.06920	.03140
10.429	2.180	.59950	.59930	10.39070	-5.23930	.00000	5.84800	.05820	.45310	.07050	.01360
10.422	6.658	.59940	.29520	10.38630	-5.23920	.00000	5.84290	.06270	.46450	.07170	.00510
10.430	14.218	.59930	-.22540	10.38990	-5.24230	.00000	5.83930	.05110	.48120	.07460	-.00090
10.443	28.284	.60070	-1.25240	10.40340	-5.25400	.00000	5.82280	.05830	.50680	.07940	-.00680
10.450	44.292	.60010	-2.28200	10.41680	-5.26110	.00000	5.81300	.05180	.52350	.08270	-.01150
	GRADIENT	-.00030	-.06808	.00222	.00066	.00000	-.00026	-.00069	.00546	.00043	-.00589

CA20 747/1 01 SI ORBITER DATA (BGN112) (20 JAN 75)

REFERENCE DATA

SREF = 2690.0000 SQ.FT. XMRP = 1109.0000 IN.XO
LREF = 474.8100 IN. YMRP = .0000 IN.YO
BREF = 936.6800 IN. ZMRP = 375.0000 IN.ZO
SCALE = .0300

PARAMETRIC DATA

ALPHAC =	4.000	BETAC =	.000
ELV-1B =	.000	ELV-0B =	3.000
ELEVON =	5.000	MACH =	.600
BETAO =	-5.000	PHI =	.000
DX =	10.000	DY =	10.000

RUN NO. 818/ 0 RN/L = 3.27 GRADIENT INTERVAL = -1.00/ 4.00

ALPHAO	DZ	MACH	DX	DY	BETAO	PHI	ALPHAW	BETA	CL	CD	CLM
10.351	-1.302	.59940	10.82050	10.31730	-5.21620	.00000	5.83140	.07500	.40000	.06220	.02750
10.339	1.671	.60090	10.62210	10.32040	-5.21560	.00000	5.83320	.07410	.42440	.06480	.00610
10.338	6.235	.60090	10.31230	10.31910	-5.21570	.00000	5.82900	.07090	.43970	.06660	-.00230
10.344	13.633	.60080	9.81000	10.31880	-5.21750	.00000	5.82270	.06730	.45900	.07020	-.00660
10.363	28.774	.60000	8.77700	10.32690	-5.22650	.00000	5.81020	.07450	.48930	.07600	-.01010
10.378	43.866	.60060	7.73940	10.34080	-5.23270	.00000	5.80630	.06750	.50940	.08000	-.01330
	GRADIENT	.00000	.00000	.00000	.00000	.00000	.00000	.00000	.00000	.00000	.00000

RUN NO. 821/ 0 RN/L = 3.24 GRADIENT INTERVAL = -1.00/ 4.00

ALPHAO	DZ	MACH	DX	DY	BETAO	PHI	ALPHAW	BETA	CL	CD	CLM
14.674	1.871	.59920	9.44540	10.32750	-5.18870	.00000	5.85890	.03760	.66690	.13260	.03970
14.654	4.908	.60040	9.24120	10.33400	-5.18670	.00000	5.85820	.03530	.68130	.13540	.02140
14.651	9.491	.59950	8.92720	10.34080	-5.18670	.00000	5.85220	.01460	.68970	.13750	.01460
14.654	16.765	.60000	8.43190	10.34180	-5.18990	.00000	5.84220	.01970	.70160	.14190	.01090
14.662	31.845	.59930	7.40100	10.36010	-5.19990	.00000	5.82760	.00710	.72460	.15000	.00420
14.672	46.937	.59980	6.36530	10.36580	-5.20490	.00000	5.81740	.01960	.73850	.15490	-.00070
14.669	61.681	.59950	5.35330	10.37880	-5.21170	.00000	5.80840	.02060	.74680	.15790	-.00540
	GRADIENT	.00000	.00000	.00000	.00000	.00000	.00000	.00000	.00000	.00000	.00000

CA20 747/1 01 S1 ORBITER DATA (BGN113) (20 JAN 75)

REFERENCE DATA

SREF = 2690.0000 SQ.FT. XMRP = 1109.0000 IN.XO
LREF = 474.8100 IN. YMRP = .0000 IN.YO
BREF = 936.6800 IN. ZMRP = 375.0000 IN.ZO
SCALE = .0300

PARAMETRIC DATA

ALPHAC =	8.000	BETAC =	.000
ELV-IB =	.000	ELV-OB =	3.000
ELEVON =	5.000	MACH =	.600
BETAO =	-5.000	PHI =	.000
DX =	.000	DY =	10.000

RUN NO. 846/ 0 RN/L = 3.27 GRADIENT INTERVAL = -1.00/ 4.00

ALPHAO	DZ	MACH	DX	DY	BETAO	PHI	ALPHAH	BETA	CL	CD	CLH
14.653	-.234	.59920	-2.08110	10.45250	-5.22880	.00000	9.71210	.05500	.56470	.11540	.05230
14.664	2.831	.59940	-2.49430	10.44140	-5.22280	.00000	9.70900	.05080	.56580	.11900	.04130
14.673	7.169	.59980	-3.08220	10.42750	-5.21910	.00000	9.70290	.05560	.60880	.12460	.03370
14.695	14.825	.60010	-4.12640	10.41340	-5.21700	.00000	9.69360	.04350	.63930	.13230	.02770
14.718	29.804	.59910	-6.18250	10.41430	-5.22380	.00000	9.68120	.04930	.68520	.14430	.01820
14.736	44.793	.60010	-8.24790	10.42500	-5.23080	.00000	9.67210	.05230	.71710	.15330	.00940
14.745	59.569	.60000	-10.29910	10.44120	-5.24020	.00000	9.66870	.05370	.73450	.15850	.00230
	GRADIENT	.00007	-.13481	-.00362	.00228	.00000	-.00101	-.00137	.00688	.00117	-.00359

CA20 747/1 01 S1 ORBITER DATA (BGN114) (28 AUG 75)

REFERENCE DATA

SREF = 2690.0000 SQ.FT. XMRP = 1109.0000 IN.XO
LREF = 474.8100 IN. YMRP = .0000 IN.YO
BREF = 936.6800 IN. ZMRP = 375.0000 IN.ZO
SCALE = .0300

PARAMETRIC DATA

ALPHAC =	8.000	BETAC =	.000
ELV-IB =	.000	ELV-OB =	3.000
ELEVON =	5.000	MACH =	.600
BETAO =	-5.000	PHI =	.000
DX =	10.000	DY =	10.000

RUN NO. 827/ 0 RN/L = 3.23 GRADIENT INTERVAL = -1.00/ 4.00

ALPHAO	DZ	MACH	DX	DY	BETAO	PHI	ALPHAH	BETA	CL	CD	CLH
10.123	-2.709	.59950	9.42810	10.35950	-5.22610	.00000	9.67390	.08450	.23220	.03820	.00780
10.130	.522	.59900	8.93410	10.33760	-5.22180	.00000	9.67420	.09690	.26840	.04340	-.00470
10.153	4.882	.59920	8.39770	10.32390	-5.21740	.00000	9.67530	.09450	.29860	.04810	-.00770
10.169	12.431	.60030	7.36470	10.32290	-5.21670	.00000	9.67190	.07600	.34120	.05500	-.00790
10.262	27.432	.59980	5.29070	10.32470	-5.22390	.00000	9.66650	.08520	.40580	.06580	-.00790
10.293	42.263	.60050	3.24330	10.33450	-5.23260	.00000	9.66240	.09340	.44800	.07290	-.00980
	GRADIENT	.00000	.00000	.00000	.00000	.00000	.00000	.00000	.00000	.00000	.00000

CA20 747/1 01 SI ORBITER DATA (BGN116) (20 JAN 75)

REFERENCE DATA

SREF = 2690.0000 SQ.FT. XMRP = 1109.0000 IN.XO
LREF = 474.8100 IN. YMRP = .0000 IN.YO
BREF = 936.6800 IN. ZMRP = 375.0000 IN.ZO
SCALE = .0300

PARAMETRIC DATA

ALPHAC = 4.000 BETAC = 5.000
ELV-IB = .000 ELV-OB = 3.000
ELEVON = 5.000 MACH = .600
BETAO = -5.000 PHI = .000
DX = 10.000 DY = .000

RUN NO. 833/ 0 RN/L = 3.28 GRADIENT INTERVAL = -1.00/ 4.00

ALPHAO	DZ	MACH	DX	DY	BETAO	PHI	ALPHAW	BETA	CL	CD	CLM
14.703	.481	.59990	9.50420	-1.51150	-5.21160	.00000	5.83950	5.03250	.61710	.13770	.08120
14.674	3.583	.59940	9.30230	-1.49580	-5.21110	.00000	5.84040	5.03840	.65160	.13830	.04800
14.669	7.765	.60000	9.02180	-1.51040	-5.21030	.00000	5.84090	5.04940	.66980	.13900	.03350
14.666	15.725	.60050	8.46640	-1.51760	-5.20820	.00000	5.83410	5.04880	.69550	.14410	.01740
14.665	30.510	.59960	7.48080	-1.52620	-5.20760	.00000	5.82210	5.06330	.72390	.15220	.00420
14.670	45.572	.59900	6.45060	-1.52710	-5.20570	.00000	5.81350	5.04380	.74100	.15730	-.00260
14.674	60.497	.59960	5.42680	-1.53350	-5.20860	.00000	5.80710	5.05660	.75120	.15990	-.00630
	GRADIENT	-.00016	-.06508	.00506	.00016	.00000	.00029	.00190	.01112	.00019	-.01070

CA20 747/1 01 SI ORBITER DATA (BGN116) (20 JAN 75)

REFERENCE DATA

SREF = 2690.0000 SQ.FT. XMRP = 1109.0000 IN.XO
LREF = 474.8100 IN. YMRP = .0000 IN.YO
BREF = 936.6800 IN. ZMRP = 375.0000 IN.ZO
SCALE = .0300

PARAMETRIC DATA

ALPHAC = 8.000 BETAC = 5.000
ELV-IB = .000 ELV-OB = 3.000
ELEVON = 5.000 MACH = .600
BETAO = -5.000 PHI = .000
DX = 10.000 DY = .000

RUN NO. 839/ 0 RN/L = 3.26 GRADIENT INTERVAL = -1.00/ 4.00

ALPHAO	DZ	MACH	DX	DY	BETAO	PHI	ALPHAW	BETA	CL	CD	CLM
10.294	-2.738	.59960	9.31160	-1.55500	-5.28470	.00000	9.65420	5.05110	.20820	.04000	.01490
10.306	.352	.60000	8.90260	-1.58040	-5.27000	.00000	9.65590	5.04940	.25010	.04570	.00230
10.320	3.098	.59990	8.53200	-1.61720	-5.25970	.00000	9.65370	5.05760	.27330	.04830	-.00220
10.367	12.333	.60060	7.27900	-1.64760	-5.24150	.00000	9.65120	5.04550	.33750	.05710	-.00630
10.428	27.414	.59940	5.21140	-1.66970	-5.23730	.00000	9.64660	5.06340	.40980	.06780	-.00990
10.473	42.599	.60060	3.11550	-1.66880	-5.23650	.00000	9.64210	5.05310	.45420	.07510	-.01320
	GRADIENT	-.00004	-.13496	-.00976	.00375	.00000	-.00080	.00299	.00845	.00095	-.00164

CA20 747/1 01 S1 ORBITER DATA (BGN114) (28 AUG 75)

REFERENCE DATA

SREF = 2690.0000 SQ.FT. XMRP = 1109.0000 IN.XO
LREF = 474.8100 IN. YMRP = .0000 IN.YO
BREF = 936.6800 IN. ZMRP = 375.0000 IN.ZO
SCALE = .0300

PARAMETRIC DATA

ALPHAC =	8.000	BETAC =	.000
ELV-IB =	.000	ELV-OB =	3.000
ELEVON =	5.000	MACH =	.600
BETAO =	-5.000	PHI =	.000
DX =	10.000	DY =	10.000

RUN NO. 824/ 0 RN/L = 3.23 GRADIENT INTERVAL = -1.00/ 4.00

ALPHAO	DZ	MACH	DX	DY	BETAO	PHI	ALPHAH	BETA	CL	CD	CLH
14.536	-.449	.59930	7.89880	10.38610	-5.19730	.00000	9.70270	.02410	.51340	.10190	.03960
14.541	2.724	.59980	7.47220	10.37240	-5.19280	.00000	9.69810	.03500	.53980	.10700	02680
14.551	7.181	.59920	6.86660	10.36200	-5.18910	.00000	9.69590	.02360	.56750	.11280	.02110
14.577	14.625	.60030	5.85320	10.35510	-5.18960	.00000	9.68780	.01990	.60280	.12140	.01790
14.616	29.549	.59900	3.80340	10.35630	-5.19630	.00000	9.67940	.01950	.65770	.13500	.01260
14.642	44.663	.60080	1.72210	10.36940	-5.20590	.00000	9.67220	.02160	.69470	.14500	.00700
14.647	59.369	.59980	-.31530	10.37680	-5.21140	.00000	9.66720	.02260	.71840	.15130	.00050
	GRADIENT	.00016	-.13446	-.08432	.00142	.00000	-.00113	.00344	.00832	.00161	-.00403

CA20 747/1 01 S1 ORBITER DATA (BGN115) (20 JAN 75)

REFERENCE DATA

SREF = 2690.0000 SQ.FT. XMRP = 1109.0000 IN.XO
LREF = 474.8100 IN. YMRP = .0000 IN.YO
BREF = 936.6800 IN. ZMRP = 375.0000 IN.ZO
SCALE = .0300

PARAMETRIC DATA

ALPHAC =	4.000	BETAC =	5.000
ELV-IB =	.000	ELV-OB =	3.000
ELEVON =	5.000	MACH =	.600
BETAO =	-5.000	PHI =	.000
DX =	10.000	DY =	.000

RUN NO. 832/ 0 RN/L = 3.26 GRADIENT INTERVAL = -1.00/ 4.00

ALPHAO	DZ	MACH	DX	DY	BETAO	PHI	ALPHAH	BETA	CL	CD	CLH
10.326	-1.459	.59910	10.80660	-1.58800	-5.24760	.00000	5.82090	5.05090	.35490	.06550	.04840
10.310	1.577	.59950	10.60980	-1.60360	-5.24580	.00000	5.82130	5.04970	.39050	.06740	.02000
10.308	6.160	.60020	10.30360	-1.62150	-5.24800	.00000	5.81960	5.05130	.41470	.06830	.00600
10.316	13.701	.60050	9.79660	-1.63320	-5.23490	.00000	5.81380	5.04780	.44290	.07090	-.00350
10.331	28.714	.60090	8.77550	-1.63910	-5.23590	.00000	5.80900	5.05230	.48050	.07610	-.01250
10.344	43.808	.60030	7.74110	-1.64140	-5.23430	.00000	5.80240	5.04990	.50180	.07970	-.01650
	GRADIENT	.00000	.00000	.00000	.00000	.00000	.00000	.00000	.00000	.00000	.00000

CA20 747/1 01 S1 ORBITER DATA (BGN116) (20 JAN 75)

REFERENCE DATA

SREF = 2690.0000 SQ.FT. XMRP = 1109.0000 IN.XO
LREF = 474.8100 IN. YMRP = .0000 IN.YO
BREF = 936.6800 IN. ZMRP = 375.0000 IN.ZO
SCALE = .0300

PARAMETRIC DATA

ALPHAC = 8.000 BETAC = 5.000
ELV-IB = .000 ELV-OB = 3.000
ELEVON = 5.000 MACH = .600
BETAO = -5.000 PHI = .000
DX = 10.000 DY = .000

RUN NO. 838/ 0 RN/L = 3.28 GRADIENT INTERVAL = -1.00/ 4.00

ALPHAO	DZ	MACH	DX	DY	BETAO	PHI	ALPHAH	BETA	CL	CD	CLM
14.538	-1.194	.59950	7.95930	-1.44850	-5.24490	.00000	9.67820	5.04490	.46250	.09650	.05820
14.540	1.941	.59950	7.54570	-1.48380	-5.23400	.00000	9.67800	5.04450	.50070	.10400	.03990
14.553	6.274	.59940	6.96660	-1.51170	-5.22180	.00000	9.67420	5.04780	.53710	.11030	.02890
14.577	13.738	.59950	5.95710	-1.55280	-5.21120	.00000	9.67180	5.06930	.58300	.11860	.02000
14.613	28.832	.59960	3.90000	-1.56200	-5.20860	.00000	9.66040	5.05950	.64700	.13330	.01060
14.640	43.865	.60040	1.83390	-1.57120	-5.20720	.00000	9.65590	5.06190	.69740	.14390	.00370
14.651	58.746	.60080	-.21820	-1.57450	-5.20980	.00000	9.64970	5.06760	.71190	.15030	-.00130
	GRADIENT	.00000	.00000	.00000	.00000	.00000	.00000	.00000	.00000	.00000	.00000

CA20 747/1 01 S1 ORBITER DATA (BGN117) (20 JAN 75)

REFERENCE DATA

SREF = 2690.0000 SQ.FT. XMRP = 1109.0000 IN.XO
LREF = 474.8100 IN. YMRP = .0000 IN.YO
BREF = 936.6800 IN. ZMRP = 375.0000 IN.ZO
SCALE = .0300

PARAMETRIC DATA

ALPHAC = 4.000 BETAC = 5.000
ELV-IB = .000 ELV-OB = 3.000
ELEVON = 5.000 MACH = .600
BETAO = -5.000 PHI = .000
DX = .000 DY = 10.000

RUN NO. 845/ 0 RN/L = 3.29 GRADIENT INTERVAL = -1.00/ 4.00

ALPHAO	DZ	MACH	DX	DY	BETAO	PHI	ALPHAH	BETA	CL	CD	CLM
10.498	-.906	.60040	.78870	9.22240	-5.21280	.00000	5.84530	5.04420	.41010	.05940	.07570
10.467	2.237	.59980	.57730	9.23320	-5.22240	.00000	5.84150	5.04890	.43330	.06810	.04600
10.441	6.513	.59920	.28940	9.22990	-5.23010	.00000	5.84000	5.05350	.45780	.07090	.02000
10.439	14.233	.60090	-.23340	9.23800	-5.23900	.00000	5.82980	5.03800	.48180	.07490	.00520
10.446	29.130	.59990	-1.25300	9.24510	-5.24980	.00000	5.81990	5.03760	.50860	.08000	-.00520
10.455	44.219	.59980	-2.29460	9.25706	-5.25780	.00000	5.81540	5.03750	.52470	.08320	-.01050
	GRADIENT	-.00019	-.06725	.00344	-.00305	.00000	-.00121	.00150	.00738	-.00041	-.00945

ORIGINAL PAGE IS OF POOR QUALITY

DATE 01 DEC 75 TABULATED SOURCE DATA - CA20

CA20 747/1 01 S1 ORBITER DATA (BGN118) (20 JAN 75)

REFERENCE DATA

SREF =	2690.0000 SQ.FT.	XMRP =	1109.0000 IN.XO
LREF =	474.8100 IN.	YMRP =	.0000 IN.YO
BREF =	936.6800 IN.	ZMRP =	375.0000 IN.ZO
SCALE =	.0300		

PARAMETRIC DATA

ALPHAC =	4.000	BETAC =	5.000
ELV-IB =	.000	ELV-OB =	3.000
ELEVON =	5.000	MACH =	.600
BETAO =	-5.000	PHI =	.000
DX =	10.000	DY =	10.000

RUN NO. 817/ 0 RN/L = 3.28 GRADIENT INTERVAL = -1.00/ 4.00

ALPHAO	DZ	MACH	DX	DY	BETAO	PHI	ALPHAH	BETA	CL	CD	CLH
10.387	-1.428	.60050	10.60850	8.27130	-5.19700	.00000	5.82810	5.08010	.36950	.06280	.06660
10.368	1.603	.59990	10.60430	8.27890	-5.20120	.00000	5.83120	5.07890	.39750	.06180	.04900
10.354	6.192	.59960	10.29750	8.27540	-5.20600	.00000	5.82650	5.09060	.42390	.06400	.01850
10.352	13.627	.60060	9.79330	8.28270	-5.21310	.00000	5.82320	5.08370	.45530	.05980	.00010
10.368	28.854	.60000	8.75340	8.29080	-5.22320	.00000	5.81190	5.08340	.48260	.07600	-.00830
10.375	43.802	.59950	7.72900	8.29670	-5.22860	.00000	5.80650	5.08390	.50840	.07970	-.01250
	GRADIENT	.00000	.00000	.00000	.00000	.00000	.00000	.00000	.00000	.00000	.00000

RUN NO. 822/ 0 RN/L = 3.25 GRADIENT INTERVAL = -1.00/ 4.00

ALPHAO	DZ	MACH	DX	DY	BETAO	PHI	ALPHAH	BETA	CL	CD	CLH
14.717	1.874	.59970	9.42000	8.37420	-5.17810	.00000	5.85110	5.08930	.63260	.13400	.08490
14.688	4.769	.59960	9.22800	8.37710	-5.17940	.00000	5.85190	5.09400	.65690	.13230	.05510
14.674	9.382	.59990	8.91570	8.38120	-5.18320	.00000	5.84940	5.09720	.67590	.13500	.03590
14.665	16.975	.59990	8.40160	8.38660	-5.18790	.00000	5.83980	5.08990	.69840	.14180	.01840
14.668	31.950	.59900	7.37290	8.39530	-5.19670	.00000	5.83260	5.09040	.72550	.15040	.00630
14.673	46.749	.60020	6.36880	8.40610	-5.20180	.00000	5.81470	5.08240	.74050	.15560	.00010
14.668	61.783	.60020	5.33720	8.41540	-5.20920	.00000	5.80610	5.09090	.74780	.15830	-.00520
	GRADIENT	.00000	.00000	.00000	.00000	.00000	.00000	.00000	.00000	.00000	.00000

CA20 747/1 01 S1 ORBITER DATA (BGN1191) (20 JAN 75)

REFERENCE DATA

SREF = 2690.0000 SQ.FT. XMRP = 1109.0000 IN.XO
LREF = 474.8100 IN. YMRP = .0000 IN.YO
BREF = 936.6800 IN. ZMRF = 375.0000 IN.ZO
SCALE = .0300

PARAMETRIC DATA

ALPHAC = 8.000 BETAC = 5.000
ELV-1B = .000 ELV-0B = 3.000
ELEVON = 5.000 MACH = .600
BETAO = -5.000 PHI = .000
DX = 10.000 DY = 10.000

RUN NO. 826/ 0 RN/L = 3.24 GRADIENT INTERVAL = -1.00/ 4.00

ALPHAO	DZ	MACH	DX	DY	BETAO	PHI	ALPHAH	BETA	CL	CD	CLM
10.232	-3.158	.59960	9.45520	8.21890	-5.17890	.00000	9.67640	5.11290	.22340	.03630	.05110
10.221	-.170	.59930	9.04460	8.24760	-5.19470	.00000	9.67420	5.10090	.24960	.03950	.02930
10.228	4.274	.60060	8.43850	8.25130	-5.20440	.00000	9.67370	5.10550	.28540	.04510	.01450
10.086	8.076	.60080	8.00330	8.24320	-5.21030	.00000	9.67500	5.10510	.32100	.05120	.00240
10.098	10.921	.60030	7.61260	8.24420	-5.21170	.00000	9.67450	5.09750	.33890	.05430	-.00060
10.159	26.257	.59990	5.50150	8.24330	-5.22100	.00000	9.66680	5.09620	.40980	.06680	-.00590
10.305	41.630	.59980	3.31110	8.25650	-5.22860	.00000	9.66440	5.09690	.44950	.07310	-.00890
	GRADIENT	.00000	.00000	.00000	.00000	.00000	.00000	.00000	.00000	.00000	.00000

RUN NO. 825/ 0 RN/L = 3.22 GRADIENT INTERVAL = -1.00/ 4.00

ALPHAO	DZ	MACH	DX	DY	BETAO	PHI	ALPHAH	BETA	CL	CD	CLM
14.586	-.647	.59910	7.90360	8.38630	-5.17870	.00000	9.69920	5.10990	.49000	.09910	.08180
14.574	2.288	.59900	7.50930	8.38730	-5.18080	.00000	9.69540	5.09010	.51890	.10230	.05960
14.572	6.896	.60040	6.88610	8.37630	-5.18510	.00000	9.69580	5.10230	.55480	.10990	.04010
14.589	14.523	.59950	5.84870	8.36390	-5.18680	.00000	9.69090	5.10280	.60080	.12140	.02490
14.622	28.445	.59990	3.80460	8.35910	-5.19440	.00000	9.68180	5.09570	.65990	.13600	.01450
14.641	44.416	.59990	1.74040	8.36180	-5.20120	.00000	9.67480	5.10310	.69650	.14550	.00790
14.651	59.262	.60020	-.31430	8.37110	-5.20880	.00000	9.66940	5.10360	.72020	.15210	.00120
	GRADIENT	-.00003	-.13436	.00034	-.00072	.00000	-.00095	-.00675	.00995	.00109	-.00755

CA20 747/1 01 S1 ORBITER DATA (BGN120) (20 JAN 75)

REFERENCE DATA

SREF =	2690.0000 SQ.FT.	XMRP =	1109.0000 IN.XO		
LREF =	474.8100 IN.	YMRP =	.0000 IN.YO		
BREF =	936.6800 IN.	ZMRP =	375.0000 IN.ZO		
SCALE =	.0300				

PARAMETRIC DATA

ALPHAC =	4.000	BETAC =	-5.000
ELV-IB =	.000	ELV-OB =	.000
ELEVON =	5.000	MACH =	.600
BETAO =	-5.000	PHI =	.000
DX =	.000	DY =	10.000

RUN NO. 765/ 0 RN/L = 3.26 GRADIENT INTERVAL = -1.00/ 4.00

ALPHAO	DZ	MACH	DX	DY	BETAO	PHI	ALPHAH	BETA	CL	CD	CLM
10.515	-1.996	.60080	.84350	11.45910	-5.24180	.00000	5.87130	-4.98110	.44090	.07340	.04120
10.489	1.101	.59950	.64030	11.44630	-5.23360	.00000	5.86780	-4.98020	.46650	.07540	.01410
10.487	5.844	.60040	.31530	11.45310	-5.23550	.00000	5.86370	-4.98810	.48130	.07550	.00560
10.491	13.003	.59970	-.17740	11.46190	-5.23990	.00000	5.85710	-4.99220	.49620	.07710	.00050
10.505	28.256	.60020	-1.23080	11.48620	-5.25290	.00000	5.84900	-4.99070	.52130	.08080	-.00530
10.512	43.053	.60090	-2.24980	11.50370	-5.26170	.00000	5.83960	-4.99000	.53870	.08390	-.00990
10.515	46.935	.59980	-2.51800	11.50600	-5.26380	.00000	5.83980	-4.98180	.54150	.08440	-.01070
	GRADIENT	.00000	.00000	.00000	.00000	.00000	.00000	.00000	.00000	.00000	.00000

RUN NO. 768/ 0 RN/L = 3.24 GRADIENT INTERVAL = -1.00/ 4.00

ALPHAO	DZ	MACH	DX	DY	BETAO	PHI	ALPHAH	BETA	CL	CD	CLM
14.817	.070	.60020	-.31490	11.36860	-5.21580	.00000	5.90170	-4.98100	.71840	.16000	.05120
14.790	3.179	.60040	-.52360	11.37120	-5.20890	.00000	5.89430	-4.97990	.73400	.16050	.02770
14.781	7.513	.60080	-.82800	11.38430	-5.21010	.00000	5.89240	-4.98870	.73490	.15890	.02160
14.780	9.056	.60090	-.93650	11.38410	-5.21080	.00000	5.89280	-4.98120	.73550	.15980	.02080
14.776	15.044	.59940	-1.35410	11.39230	-5.21500	.00000	5.88410	-4.98340	.74000	.15910	.01740
14.778	30.013	.59950	-2.39160	11.42080	-5.22890	.00000	5.86950	-4.99950	.75330	.16330	.00990
14.777	44.971	.60010	-3.42780	11.43380	-5.23760	.00000	5.85800	-4.98540	.76410	.16600	.00390
14.777	60.036	.60070	-4.47510	11.45160	-5.24820	.00000	5.85010	-4.98230	.77060	.16770	-.00180
	GRADIENT	.00006	-.06713	.00064	.00222	.00000	-.00238	.00035	.00502	.00016	-.00756

CA20 747/1 01 S1 ORBITER DATA (BGN121) (20 JAN 75)

REFERENCE DATA

SREF =	2690.0000 SQ.FT.	XMRP =	1109.0000 IN.XO
LREF =	474.8100 IN.	YMRP =	.0000 IN.YO
BREF =	936.6800 IN.	ZMRP =	375.0000 IN.ZO
SCALE =	.0300		

PARAMETRIC DATA

ALPHAC =	8.000	BETAC =	-5.000
ELV-IB =	.000	ELV-OB =	.000
ELEVON =	5.000	MACH =	.600
BETAO =	-5.000	PHI =	.000
DX =	.000	DY =	10.000

RUN NO. 766/ 0 RN/L = 3.25 GRADIENT INTERVAL = -1.00/ 4.00

ALPHAO	DZ	MACH	DX	DY	BETAO	PHI	ALPHAW	BETA	CL	CD	CLM
10.296	-3.648	.60030	-.59030	11.55550	-5.26430	.00000	9.75040	-4.98270	.26500	.04640	.02410
10.312	-.567	.60080	-.99740	11.51870	-5.24420	.00000	9.74600	-4.99880	.30650	.05210	.01230
10.352	4.042	.60030	-1.63380	11.50050	-5.23340	.00000	9.74400	-4.98900	.34230	.05670	.00800
10.398	11.503	.60030	-2.66550	11.49930	-5.23310	.00000	9.73990	-4.99020	.38520	.06280	.00520
10.447	26.756	.59940	-4.78130	11.52080	-5.24770	.00000	9.73480	-4.98160	.44600	.07200	.00060
10.474	41.590	.60020	-6.83220	11.53820	-5.25820	.00000	9.72930	-4.97300	.48530	.07810	-.00430
10.480	46.724	.59970	-7.56360	11.54730	-5.26270	.00000	9.72760	-4.98040	.49430	.07970	-.00640
	GRADIENT	.00000	.00000	.00000	.00000	.00000	.00000	.00000	.00000	.00000	.00000

RUN NO. 767/ 0 RN/L = 3.24 GRADIENT INTERVAL = -1.00/ 4.00

ALPHAO	DZ	MACH	DX	DY	BETAO	PHI	ALPHAW	BETA	CL	CD	CLM
14.680	-1.558	.60050	-1.92420	11.43940	-5.22370	.00000	9.78050	-4.97870	.57650	.12060	.05110
14.680	1.597	.60010	-2.35280	11.42690	-5.20980	.00000	9.77830	-4.98750	.59960	.12380	.03920
14.688	5.926	.59990	-2.94650	11.41730	-5.20470	.00000	9.77280	-4.98780	.62030	.12760	.03300
14.707	13.492	.60040	-3.98700	11.41840	-5.20750	.00000	9.75940	-4.98580	.64760	.13440	.02840
14.735	28.283	.59950	-6.03700	11.44460	-5.22150	.00000	9.74920	-4.98790	.69340	.14650	.01960
14.751	43.438	.59960	-8.14790	11.46360	-5.23100	.00000	9.74110	-4.98370	.72380	.15520	.01170
14.755	58.184	.60040	-10.20510	11.48640	-5.24360	.00000	9.73190	-4.98850	.74010	.15990	.00420
	GRADIENT	.00000	.00000	.00000	.00000	.00000	.00000	.00000	.00000	.00000	.00000

CA20 747/1 01 S1 ORBITER DATA (BGN122) (20 JAN 75)

REFERENCE DATA

SREF =	2690.0000 SQ.FT.	XMRP =	1109.0000 IN.XO
LREF =	474.8100 IN.	YMRP =	.0000 IN.YO
BREF =	936.6800 IN.	ZMRP =	375.0000 IN.ZO
SCALE =	.0300		

PARAMETRIC DATA

ALPHAC =	4.000	BETAC =	.000
ELV-IB =	.000	ELV-OB =	.000
ELEVON =	5.000	MACH =	.600
BETAO =	-5.000	PHI =	.000
DX =	.000	DY =	10.000

RUN NO. 781/ 0 RN/L = 3.32 GRADIENT INTERVAL = -1.00/ 4.00

ALPHAO	DZ	MACH	DX	DY	BETAO	PHI	ALPHAW	BETA	CL	CD	CLM
10.533	-1.760	.60020	.83720	10.39810	-5.23780	.00000	5.87650	-.00910	.45600	.07110	.03270
10.518	1.242	.60000	.63340	10.40180	-5.23580	.00000	5.87280	-.01120	.47240	.07210	.01520
10.511	5.718	.60020	.32880	10.40050	-5.23670	.00000	5.86530	-.01460	.48300	.07310	.00730
10.517	13.048	.59950	-.17620	10.40330	-5.24020	.00000	5.85710	-.01870	.49780	.07570	.00170
10.529	28.455	.60000	-1.23980	10.41620	-5.25120	.00000	5.84810	-.01200	.52170	.08040	-.00490
10.535	43.071	.60080	-2.24820	10.43250	-5.26010	.00000	5.84030	-.01840	.53850	.08370	-.00960
10.533	47.085	.60070	-2.52230	10.43510	-5.26270	.00000	5.83630	-.01030	.54140	.08430	-.01070
	GRADIENT	.00000	.00000	.00000	.00000	.00000	.00000	.00000	.00000	.00000	.00000

RUN NO. 764/ 0 RN/L = 3.26 GRADIENT INTERVAL = -1.00/ 4.00

ALPHAO	DZ	MACH	DX	DY	BETAO	PHI	ALPHAW	BETA	CL	CD	CLM
14.817	.178	.60040	-.29330	10.38910	-5.21580	.00000	5.90850	-.00220	.74170	.15550	.03800
14.797	3.067	.60070	-.49760	10.40960	-5.21220	.00000	5.88420	-.01100	.74330	.15650	.02680
14.787	7.581	.59930	-.81630	10.41730	-5.21290	.00000	5.88570	-.01520	.74210	.15670	.02170
14.780	15.133	.59990	-1.34110	10.42580	-5.21580	.00000	5.88060	-.01750	.74140	.15960	.01700
14.773	29.995	.59930	-2.37300	10.44100	-5.22670	.00000	5.86560	-.01800	.75180	.16430	.00930
14.775	45.089	.60000	-3.41890	10.45180	-5.23340	.00000	5.85390	-.01260	.76050	.16710	.00300
14.771	60.069	.60020	-4.45690	10.47380	-5.24560	.00000	5.84420	-.01110	.76570	.16910	-.00210
	GRADIENT	.00010	-.07072	.00710	.00125	.00000	-.00149	-.00305	.00055	.00035	-.00388

DATE 01 DEC 75 TABULATED SOURCE DATA - CA20

CA20 747/1 01 SI ORBITER DATA (BGN123) (20 JAN 75)

REFERENCE DATA

SREF =	2690.0000 SQ.FT.	XMRP =	1109.0000 IN.XO		
LREF =	474.8100 IN.	YMRP =	.0000 IN.YO		
BREF =	936.6800 IN.	ZMRP =	375.0000 IN.ZO		
SCALE =	.0300				

PARAMETRIC DATA

ALPHAC =	8.000	BETAC =	.000
ELV-1B =	.000	ELV-OB =	.000
ELEVON =	5.000	MACH =	.600
BETAO =	-5.000	PHI =	.000
DX =	.000	DY =	10.000

RUN NO. 762/ 0 RN/L = 3.28 GRADIENT INTERVAL = -1.00/ 4.00

ALPHAO	DZ	MACH	DX	DY	BETAO	PHI	ALPHAH	BETA	CL	CD	CLH
10.341	-3.606	.60010	-.58610	10.45990	-5.25020	.00000	9.74490	-.00690	.26840	.04350	.03680
10.346	-.403	.59950	-1.02000	10.44290	-5.24670	.00000	9.74600	-.01040	.30590	.04880	.01860
10.375	5.542	.60010	-1.83100	10.41910	-5.23990	.00000	9.74280	-.01460	.35110	.05570	.01030
10.411	11.472	.60010	-2.65140	10.41120	-5.23870	.00000	9.73990	-.01770	.38470	.06130	.00740
10.469	26.651	.59920	-4.75740	10.41420	-5.24700	.00000	9.73260	-.00880	.44640	.07150	.00170
10.496	41.561	.59930	-6.83220	10.42860	-5.25710	.00000	9.72730	-.00810	.48490	.07790	-.00370
10.503	46.845	.60020	-7.56930	10.43080	-5.25900	.00000	9.72580	-.00790	.49520	.07960	-.00590
	GRADIENT	.00000	.00000	.00000	.00000	.00000	.00000	.00000	.00000	.00000	.00000

RUN NO. 763/ 0 RN/L = 3.26 GRADIENT INTERVAL = -1.00/ 4.00

ALPHAO	DZ	MACH	DX	DY	BETAO	PHI	ALPHAH	BETA	CL	CD	CLH
14.689	-1.516	.60030	-1.91500	10.45900	-5.22780	.00000	9.77730	-.00670	.57720	.11740	.05448
14.691	2.914	.60020	-2.51930	10.44440	-5.21870	.00000	9.77300	-.01230	.60540	.12220	.04070
14.699	7.487	.59980	-3.14680	10.42820	-5.21400	.00000	9.76670	-.00730	.62620	.12730	.03450
14.711	13.631	.59930	-3.99010	10.41880	-5.21290	.00000	9.75730	-.01900	.65080	.13350	.02980
14.742	28.443	.59990	-6.03780	10.42940	-5.22190	.00000	9.74450	-.02910	.69650	.14630	.01990
14.754	43.346	.60010	-8.11400	10.44480	-5.22970	.00000	9.73780	-.01780	.72350	.15550	.01160
14.753	58.323	.60020	-10.20620	10.46770	-5.24130	.00000	9.72950	-.00890	.73590	.16120	.00390
	GRADIENT	.00000	.00000	.00000	.00000	.00000	.00000	.00000	.00000	.00000	.00000

CA20 747/1 01 S1 ORBITER DATA (BONI29) (20 JAN 75)

REFERENCE DATA

SREF =	2690.0000 SQ.FT.	XMRP =	1109.0000 IN.XO
LREF =	474.8100 IN.	YMRP =	.0000 IN.YO
BREF =	936.6800 IN.	ZMRP =	375.0000 IN.ZO
SCALE =	.0300		

PARAMETRIC DATA

ALPHAC =	4.000	BETAC =	5.000
ELV-IB =	.000	ELV-OB =	.000
ELEVON =	5.000	MACH =	.600
BETAO =	-5.000	PHI =	.000
DX =	.000	DY =	10.000

RUN NO. 769/ 0 RN/L = 3.24 GRADIENT INTERVAL = -1.00/ 4.00

ALPHAO	DZ	MACH	DX	DY	BETAO	PHI	ALPHAH	BETA	CL	CD	CLM
10.561	-1.968	.60050	.84330	9.22610	-5.20960	.00000	5.87540	5.00580	.43320	.07120	.07340
10.533	1.267	.60040	.62320	9.23700	-5.21650	.00000	5.87370	5.00280	.45360	.07000	.04680
10.511	5.643	.60050	.31090	9.24170	-5.22710	.00000	5.87150	4.99430	.47760	.07230	.02120
10.506	13.217	.60020	-.19490	9.24420	-5.23460	.00000	5.86400	4.99420	.49920	.07600	.00700
10.514	28.279	.59950	-1.23580	9.25270	-5.24690	.00000	5.85360	4.99140	.52610	.08070	-.00350
10.514	42.985	.59930	-2.25500	9.26120	-5.25480	.00000	5.84920	4.99910	.54090	.08360	-.00900
10.518	46.942	.59980	-2.52760	9.26360	-5.25640	.00000	5.84540	4.99920	.54420	.08440	-.01030
	GRADIENT	.00000	.00000	.00000	.00000	.00000	.00000	.00000	.00000	.00000	.00000

RUN NO. 772/ 0 RN/L = 3.23 GRADIENT INTERVAL = -1.00/ 4.00

ALPHAO	DZ	MACH	DX	DY	BETAO	PHI	ALPHAH	BETA	CL	CD	CLM
14.954	.809	.60000	-.36940	9.30510	-5.19510	.00000	5.90160	4.99800	.70890	.15560	.08390
14.915	4.128	.59920	-.59930	9.32970	-5.20000	.00000	5.89450	4.99270	.72310	.15290	.05510
14.888	10.992	.60080	-1.07290	9.34180	-5.20770	.00000	5.88300	4.99690	.73630	.15600	.03070
14.877	18.691	.60050	-1.60570	9.35210	-5.21430	.00000	5.87640	4.99090	.74460	.15990	.02010
14.871	33.530	.60040	-2.63000	9.36710	-5.22520	.00000	5.86860	4.99910	.75720	.16420	.00960
14.857	48.582	.60010	-3.67260	9.37470	-5.23120	.00000	5.84820	4.99940	.76590	.16690	.00250
14.860	63.797	.59940	-4.73190	9.39310	-5.24340	.00000	5.84160	4.99940	.76920	.16770	-.00260
	GRADIENT	.00000	.00000	.00000	.00000	.00000	.00000	.00000	.00000	.00000	.00000

CA20 747/1 01 S1 ORBITER DATA (BGN125) (20 JAN 75)

REFERENCE DATA

SREF =	2690.0000 SQ.FT.	XMRP =	1109.0000 IN.XO		
LREF =	474.8100 IN.	YMRP =	.0000 IN.YO		
BREF =	936.6800 IN.	ZMRP =	375.0000 IN.ZO		
SCALE =	.0300				

PARAMETRIC DATA

ALPHAC =	8.000	BETAC =	5.000
ELV-IB =	.000	ELV-OB =	.000
ELEVON =	5.000	MACH =	.600
BETAO =	-5.000	PHI =	.000
DX =	.000	DY =	10.000

RUN NO. 770/ 0 RN/L = 3.23 GRADIENT INTERVAL = -1.00/ 4.00

ALPHAO	DZ	MACH	DX	DY	BETAO	PHI	ALPHAW	BETA	CL	CD	CLM
10.389	-3.483	.59990	-.59100	9.18540	-5.19210	.00000	9.73870	5.00480	.27590	.04510	.07220
10.364	-.364	.60040	-1.01940	9.20850	-5.21240	.00000	9.73710	5.00040	.30140	.04740	.04530
10.376	4.046	.59980	-1.62970	9.20920	-5.22250	.00000	9.73610	5.00530	.33780	.05330	.02600
10.412	11.707	.59980	-2.68850	9.21350	-5.23110	.00000	9.73290	4.99850	.38580	.06140	.01340
10.454	26.499	.59960	-4.73520	9.21380	-5.24260	.00000	9.72830	4.99510	.44860	.07180	.00340
10.479	41.497	.59910	-6.81820	9.22210	-5.25140	.00000	9.72080	4.99590	.48800	.07820	-.00340
10.486	46.758	.59950	-7.55090	9.22410	-5.25460	.00000	9.71940	5.00350	.49850	.07990	-.00530
	GRADIENT	.00000	.00000	.00000	.00000	.00000	.00000	.00000	.00000	.00000	.00000

RUN NO. 771/ 0 RN/L = 3.23 GRADIENT INTERVAL = -1.00/ 4.00

ALPHAO	DZ	MACH	DX	DY	BETAO	PHI	ALPHAW	BETA	CL	CD	CLM
14.823	-.884	.59960	-2.03280	9.33230	-5.19580	.00000	9.76760	5.01150	.54850	.11500	.10140
14.797	1.955	.60050	-2.41590	9.34470	-5.20380	.00000	9.76340	4.99810	.57760	.11820	.07190
14.791	6.399	.59990	-3.02280	9.33420	-5.20750	.00000	9.75890	4.99440	.60650	.12360	.05170
14.798	14.059	.60070	-4.07020	9.31890	-5.21020	.00000	9.74920	5.00170	.64330	.13300	.03600
14.819	28.947	.59990	-6.12930	9.31700	-5.21810	.00000	9.74410	4.99360	.69280	.14610	.02190
14.842	43.761	.60020	-8.18550	9.32610	-5.22580	.00000	9.73320	5.00170	.72300	.15520	.01210
14.847	59.029	.59990	-10.31650	9.34040	-5.23500	.00000	9.72670	5.00260	.74060	.16060	.00380
	GRADIENT	.00032	-.13493	.00437	-.00282	.00000	-.00148	-.00472	.01025	.00113	-.01039

ORIGINAL PAGE IS OF POOR QUALITY

CA20 747/1 02 S1 ORBITER DATA (BGN126) (29 AUG 75)

REFERENCE DATA

SREF = 2690.0000 SQ.FT. XMRP = 1109.0000 IN.XO
LREF = 474.8100 IN. YMRP = .0000 IN.YO
BREF = 936.6800 IN. ZMRP = 375.0000 IN.ZO
SCALE = .0300

PARAMETRIC DATA

ALPHAC =	4.000	BETAC =	-5.000
ELV-IB =	.000	ELV-OB =	3.000
ELEVON =	5.000	MACH =	.600
BETAO =	.000	PHI =	.000
DX =	.000	DY =	.000

RUN NO. 656/ 0 RN/L = 3.29 GRADIENT INTERVAL = -1.00/ 4.00

ALPHAO	DZ	MACH	DX	DY	BETAO	PHI	ALPHAW	BETA	CL	CD	CLM
10.466	-1.096	.60040	10.76360	1.93190	.02640	.00000	5.87110	-4.59100	.41960	.09780	.05250
10.459	2.127	.59920	10.56940	1.94420	.01780	.00000	5.87110	-4.97990	.43730	.09850	.03950
10.459	6.620	.60000	10.26250	1.96080	.01060	.00000	5.85390	-4.98600	.44980	.10050	.03300
10.464	14.115	.59930	9.74740	1.97410	.00250	.00000	5.85590	-4.97810	.46690	.10330	.02720
10.475	28.115	.59[illegible]9	8.71410	1.99380	-.00580	.00000	5.84530	-4.98080	.49440	.10930	.02010
10.481	44.160	.59[illegible]0	7.67070	2.00190	-.00610	.00000	5.84030	-4.98800	.51070	.11140	.01520
10.485	48.200	.59920	7.39520	2.00180	-.00610	.00000	5.83410	-4.98750	.51430	.11210	.01410
	GRADIENT	.00000	.00000	.00000	.00000	.00000	.00000	.00000	.00000	.00000	.00000

CA20 747/1 02 S1 ORBITER DATA (BGN127) (20 JAN 75)

REFERENCE DATA

SREF = 2690.0000 SQ.FT. XMRP = 1109.0000 IN.XO
LREF = 474.8100 IN. YMRP = .0000 IN.YO
BREF = 936.6800 IN. ZMRP = 375.0000 IN.ZO
SCALE = .0300

PARAMETRIC DATA

ALPHAC =	4.000	BETAC =	-5.000
ELV-IB =	.000	ELV-OB =	3.000
ELEVON =	5.000	MACH =	.600
BETAO =	.000	PHI =	.000
DX =	10.000	DY =	.000

RUN NO. 657/ 0 RN/L = 3.34 GRADIENT INTERVAL = -1.00/ 4.00

ALPHAO	DZ	MACH	DX	DY	BETAO	PHI	ALPHAW	BETA	CL	CD	CLM
10.433	-1.282	.59920	10.78030	1.92340	.02690	.00000	5.86290	-4.95760	.38290	.09310	.04380
10.431	1.807	.59920	10.57160	1.93720	.01910	.00000	5.85170	-4.96380	.40330	.09430	.03190
10.433	6.229	.60000	10.27180	1.94970	.01210	.00000	5.85780	-4.96200	.41990	.09650	.02590
10.444	14.070	.60000	9.73470	1.96260	.00440	.00000	5.85180	-4.95390	.44200	.09950	.02110
10.465	28.827	.59930	8.71920	1.97980	-.00320	.00000	5.84330	-4.95700	.47460	.10460	.01630
10.477	43.949	.59940	7.67920	1.99260	-.00450	.00000	5.83720	-4.97220	.49560	.10950	.01290
10.478	48.212	.59980	7.38180	1.99180	-.00550	.00000	5.83600	-4.95410	.50000	.10940	.01200
	GRADIENT	.00000	.00000	.00000	.00000	.00000	.00000	.00000	.00000	.00000	.00000

CA20 747/1 02 SI ORBITER DATA (BGN128) (20 JAN 75)

REFERENCE DATA

SREF = 2690.0000 SQ.FT. XMRP = 1109.0000 IN.XO
LREF = 474.8100 IN. YMRP = .0000 IN.YO
BREF = 936.6800 IN. ZMRP = 375.0000 IN.ZO
SCALE = .0300

PARAMETRIC DATA

ALPHAC = 4.000 BETAC = -5.000
ELV-IB = .000 ELV-OB = 3.000
ELEVON = 5.000 MACH = .600
BETAO = .000 PHI = .000
DX = 20.000 DY = .000

RUN NO. 669/ 0 RN/L = 3.32 GRADIENT INTERVAL = -1.00/ 4.00

ALPHAO	DZ	MACH	DX	DY	BETAO	PHI	ALPHAH	BETA	CL	CD	CLH
10.338	-1.706	.60020	20.78390	2.80120	.02290	.00000	5.84610	-4.97720	.35550	.09140	.03940
10.333	1.490	.59930	20.57030	2.80850	.01620	.00000	5.84520	-4.96530	.38150	.09290	.02530
10.348	5.895	.59930	20.26620	2.82240	.00870	.00000	5.84260	-4.96280	.40220	.09500	.01890
10.360	13.450	.59940	19.75050	2.84000	.00250	.00000	5.83790	-4.97010	.42790	.09780	.01480
10.383	28.424	.60060	18.72420	2.84590	-.00400	.00000	5.83120	-4.95760	.46490	.10270	.01190
10.396	43.434	.59980	17.69220	2.86070	-.00470	.00000	5.82390	-4.97340	.48740	.10640	.00990
10.401	48.251	.60010	17.35740	2.86070	-.00700	.00000	5.82450	-4.96530	.49350	.10720	.00980
	GRADIENT	.00000	.00000	.00000	.00000	.00000	.00000	.00000	.00000	.00000	.00000

CA20 747/1 02 SI ORBITER DATA (BGN129) (20 JAN 75)

REFERENCE DATA

SREF = 2690.0000 SQ.FT. XMRP = 1109.0000 IN.XO
LREF = 474.8100 IN. YMRP = .0000 IN.YO
BREF = 936.6800 IN. ZMRP = 375.0000 IN.ZO
SCALE = .0300

PARAMETRIC DATA

ALPHAC = 4.000 BETAC = .000
ELV-IB = .000 ELV-OB = 3.000
ELEVON = 5.000 MACH = .600
BETAO = .000 PHI = .000
DX = .000 DY = .000

RUN NO. 652/ 0 RN/L = 3.31 GRADIENT INTERVAL = -1.00/ 4.00

ALPHAO	DZ	MACH	DX	DY	BETAO	PHI	ALPHAH	BETA	CL	CD	CLH
10.500	-.437	.60030	.77380	-.01920	.00560	.00000	5.87480	.04740	.42010	.09530	.04730
10.491	2.659	.59970	.56060	-.01970	.00480	.00000	5.87310	.05460	.42820	.09590	.03810
10.491	7.176	.60030	.25130	-.01380	.00350	.00000	5.86650	.03660	.43960	.09800	.03150
10.496	14.694	.59940	-.26210	-.01610	.00270	.00000	5.85330	.05350	.45570	.10140	.02610
10.508	26.858	.59930	-1.10100	-.00610	-.00180	.00000	5.84700	.04480	.47840	.10600	.02030
10.510	29.527	.59940	-1.28250	-.00180	-.00280	.00000	5.84330	.03710	.48370	.10690	.01920
10.521	44.750	.59910	-2.33460	-.00040	-.00350	.00000	5.83550	.04500	.50130	.11040	.01480
10.524	48.090	.60070	-2.55480	.00190	-.00470	.00000	5.83420	.04510	.50420	.11100	.01370
	GRADIENT	-.00019	-.06987	-.00018	-.00026	.00000	-.00055	.00233	.00282	.00019	-.00297

CA20 747/1 02 SI ORBITER DATA (BGN128) (20 JAN 75)

REFERENCE DATA

SREF = 2690.0000 SQ.FT. XMRP = 1109.0000 IN.XO
LREF = 474.8100 IN. YMRP = .0000 IN.YO
BREF = 936.6800 IN. ZMRP = 375.0000 IN.ZO
SCALE = .0300

PARAMETRIC DATA

ALPHAC = 4.000 BETAC = .000
ELV-IB = .000 ELV-OB = 3.000
ELEVON = 5.000 MACH = .600
BETAO = .000 PHI = .000
DX = .000 DY = .000

RUN NO. 653/ 0 RN/L = 3.29 GRADIENT INTERVAL = -1.00/ 4.00

ALPHAO	DZ	MACH	DX	DY	BETAO	PHI	ALPHAW	BETA	CL	CD	CLM
14.760	1.601	.60030	-.37590	-.00820	-.00010	.00000	5.90450	.03130	.69620	.18340	.05560
14.750	4.801	.60000	-.60190	-.00730	-.00160	.00000	5.89740	.04580	.69080	.18200	.05280
14.743	9.200	.59960	-.80970	-.00670	-.00130	.00000	5.89170	.04590	.69160	.18350	.04950
14.738	16.514	.59900	-1.41430	-.00350	-.00310	.00000	5.87580	.05400	.69710	.18710	.04420
14.739	31.538	.59910	-2.45160	.01100	-.00700	.00000	5.85960	.03740	.71190	.19380	.03630
14.741	46.575	.59980	-3.49040	.01400	-.00920	.00000	5.84790	.04480	.72170	.19770	.03110
14.736	61.537	.59920	-4.52810	.02380	-.01480	.00000	5.84020	.04460	.72780	.19930	.02690
	GRADIENT	.00000	.00000	.00000	.00000	.00000	.00000	.00000	.00000	.00000	.00000

CA20 747/1 02 SI ORBITER DATA (BGN130) (20 JAN 75)

REFERENCE DATA

SREF = 2690.0000 SQ.FT. XMRP = 1109.0000 IN.XO
LREF = 474.8100 IN. YMRP = .0000 IN.YO
BREF = 936.6800 IN. ZMRP = 375.0000 IN.ZO
SCALE = .0300

PARAMETRIC DATA

ALPHAC = 4.000 BETAC = .000
ELV-IB = .000 ELV-OB = 3.000
ELEVON = 5.000 MACH = .600
BETAO = .000 PHI = .000
DX = 10.000 DY = .000

RUN NO. 661/ 0 RN/L = 3.30 GRADIENT INTERVAL = -1.00/ 4.00

ALPHAO	DZ	MACH	DX	DY	BETAO	PHI	ALPHAW	BETA	CL	CD	CLM
10.416	-1.295	.59950	10.81230	-.00590	.00640	.00000	5.86600	.00120	.39900	.09170	.03960
10.413	1.696	.59980	10.60770	-.00370	.00510	.00000	5.86550	.00080	.40930	.09250	.03110
10.418	6.294	.59950	10.29140	-.00080	.00360	.00000	5.86130	.00010	.42310	.09480	.02570
10.427	13.796	.59900	9.77720	-.00180	.00220	.00000	5.85460	.00730	.44380	.09870	.02110
10.446	28.832	.59940	8.74400	.00930	-.00260	.00000	5.84380	-.00150	.47620	.10450	.01610
10.459	43.886	.59950	7.71030	.00770	-.00200	.00000	5.83270	.00640	.49710	.10840	.01300
10.460	48.115	.59900	7.41160	.01090	-.00390	.00000	5.83590	.00630	.50060	.10940	.01180
	GRADIENT	.00000	.00000	.00000	.00000	.00000	.00000	.00000	.00000	.00000	.00000

ORIGINAL PAGE IS
OF POOR QUALITY

CA20 747/1 02 SI ORBITER DATA (BGN130) (20 JAN 75)

REFERENCE DATA

SREF = 2690.0000 SQ.FT. XMRP = 1109.0000 IN.XO
LREF = 474.8100 IN. YMRP = .0000 IN.YO
BREF = 936.6800 IN. ZMRP = 375.0000 IN.ZO
SCALE = .0300

PARAMETRIC DATA

ALPHAC = 4.000 BETAC = .000
ELV-IB = .000 ELV-OB = 3.000
ELEVON = 5.000 MACH = .600
BETAO = .000 PHI = .000
DX = 10.000 DY = .000

RUN NO. 659/ 0 RN/L = 3.31 GRADIENT INTERVAL = -1.00/ 4.00

ALPHAO	OZ	MACH	DX	DY	BETAO	PHI	ALPHAW	BETA	CL	CD	CLM
14.654	1.473	.59920	9.49420	.00240	-.00220	.00000	5.89650	-.01400	.66040	.16390	.05140
14.652	4.559	.59970	9.28000	-.00770	-.00200	.00000	5.89380	.00780	.66120	.16410	.04910
14.654	9.090	.60080	8.97090	-.00540	-.00190	.00000	5.88430	-.00040	.66860	.16830	.04510
14.654	16.527	.59930	8.45720	-.00110	-.00280	.00000	5.87540	-.00060	.68080	.17420	.04030
14.662	31.535	.59920	7.42330	.01230	-.00790	.00000	5.86060	.00650	.70040	.18390	.03410
14.669	46.582	.60060	6.38510	.01520	-.00730	.00000	5.85040	-.00160	.71450	.18970	.02990
14.666	61.500	.59930	5.35300	.02020	-.01170	.00000	5.84130	.00830	.72250	.19200	.02640
	GRADIENT	.00000	.00000	.00000	.00000	.00000	.00000	.00000	.00000	.00000	.00000

CA20 747/1 02 SI ORBITER DATA (BGN131) (20 JAN 75)

REFERENCE DATA

SREF = 2690.0000 SQ.FT. XMRP = 1109.0000 IN.XO
LREF = 474.8100 IN. YMRP = .0000 IN.YO
BREF = 936.6800 IN. ZMRP = 375.0000 IN.ZO
SCALE = .0300

PARAMETRIC DATA

ALPHAC = 4.000 BETAC = .000
ELV-IB = .000 ELV-OB = 3.000
ELEVON = 5.000 MACH = .600
BETAO = .000 PHI = .000
DX = 20.000 DY = .000

RUN NO. 665/ 0 RN/L = 3.29 GRADIENT INTERVAL = -1.00/ 4.00

ALPHAO	OZ	MACH	DX	DY	BETAO	PHI	ALPHAW	BETA	CL	CD	CLM
10.344	-1.157	.60020	20.75990	-.01360	.01070	.00000	5.85580	.00810	.37550	.09080	.03010
10.344	1.504	.60080	20.57800	-.01080	.00820	.00000	5.85790	-.00760	.38740	.09130	.02410
10.359	6.352	.60080	20.24040	-.01160	.00820	.00000	5.85700	.00670	.40590	.09350	.01870
10.371	13.612	.60090	19.74450	-.00940	.00660	.00000	5.84970	.00620	.42930	.09680	.01550
10.391	28.736	.59970	18.70630	-.00410	.00100	.00000	5.83920	.01320	.46550	.10300	.01220
10.408	43.809	.59970	17.66210	.00120	.00220	.00000	5.83580	.00580	.48970	.10710	.01060
10.408	48.295	.59950	17.34990	.00520	.00030	.00000	5.83690	.00580	.49310	.10810	.01010
	GRADIENT	.00000	.00000	.00000	.00000	.00000	.00000	.00000	.00000	.00000	.00000

C.5

CA20 747/1 02 SI ORBITER DATA (BGN131) (20 JAN 75)

REFERENCE DATA

SREF =	2699.0000 SQ.FT.	XMRP =	1109.0000 IN.XO		
LREF =	474.8100 IN.	YMRP =	.0000 IN.YO		
BREF =	936.6800 IN.	ZMRP =	375.0000 IN.ZO		
SCALE =	.0300				

PARAMETRIC DATA

ALPHAC =	4.000	BETAC =	.000
ELV-IB =	.000	ELV-OB =	3.000
ELEVON =	5.000	MACH =	.600
BETAO =	.000	PHI =	.000
DX =	20.000	DY =	.000

RUN NO. 668/ 0 RN/L = 3.30 GRADIENT INTERVAL = -1.00/ 4.00

ALPHAO	DZ	MACH	DX	DY	BETAO	PHI	ALPHAW	BETA	CL	CD	CLM
14.563	1.265	.60070	19.35720	-.00550	.00370	.00000	5.89270	-.00740	.63340	.16500	.04548
14.561	3.972	.59970	19.17960	-.01280	.00290	.00000	5.88100	.00760	.63700	.16510	.04390
14.566	8.805	.60090	18.85080	-.01360	.00120	.00000	5.87500	.00680	.64960	.16040	.03960
14.572	16.457	.60070	18.32510	-.01960	.00040	.00000	5.86880	.01380	.66650	.16750	.03580
14.587	31.737	.59980	17.27880	-.00450	-.00270	.00000	5.85150	.00580	.69460	.17860	.03050
14.590	46.430	.60030	16.26130	.00240	-.00300	.00000	5.84570	.01340	.70640	.18680	.02770
14.592	61.104	.60010	15.24460	.01090	-.00780	.00000	5.84000	.01330	.71540	.18960	.02530
	GRADIENT	-.00037	-.06931	-.00270	-.00030	.00000	-.00063	.00554	.00133	.00004	-.00055

CA20 747/1 02 SI ORBITER DATA (BGN132) (20 JAN 75)

REFERENCE DATA

SREF =	2690.0000 SQ.FT.	XMRP =	1109.0000 IN.XO		
LREF =	474.8100 IN.	YMRP =	.0000 IN.YO		
BREF =	936.6800 IN.	ZMRP =	375.0000 IN.ZO		
SCALE =	.0300				

PARAMETRIC DATA

ALPHAC =	8.000	BETAC =	.000
ELV-IB =	.000	ELV-OB =	3.000
ELEVON =	5.000	MACH =	.600
BETAO =	.000	PHI =	.000
DX =	.000	DY =	.000

RUN NO. 655/ 0 RN/L = 3.29 GRADIENT INTERVAL = -1.00/ 4.00

ALPHAO	DZ	MACH	DX	DY	BETAO	PHI	ALPHAW	BETA	CL	CD	CLM
10.325	-3.370	.60020	-.58580	-.01840	.00440	.00000	9.73250	.05010	.23640	.07140	.05018
10.339	-.284	.59980	-1.00620	-.02020	.00540	.00000	9.73490	.04910	.26580	.07490	.04230
10.358	4.265	.59930	-1.62680	-.01390	.00340	.00000	9.73230	.04020	.30020	.07970	.03670
10.393	11.674	.59950	-2.64370	-.01290	.00270	.00000	9.72790	.03930	.34540	.08710	.03190
10.467	26.974	.60060	-4.76500	-.00550	-.00210	.00000	9.72060	.04650	.41380	.09830	.02550
10.499	41.940	.60090	-6.84130	-.00280	-.00150	.00000	9.71560	.03910	.45700	.10530	.02030
10.504	47.907	.59980	-7.67290	.00000	-.00430	.00000	9.71420	.04670	.46830	.10730	.01790
	GRADIENT	.00000	.00000	.00000	.00000	.00000	.00000	.00000	.00000	.00000	.00000

CA20 747/1 02 S1 ORBITER DATA (BGN132) (20 JAN 75)

REFERENCE DATA

SREF = 2690.0000 SQ.FT. XMRP = 1109.0000 IN.XO
LREF = 474.8100 IN. YMRP = .0000 IN.YO
BREF = 936.6800 IN. ZMRP = 375.0000 IN.ZO
SCALE = .0300

PARAMETRIC DATA

ALPHAC = 8.000 BETAC = .000
ELV-1B = .000 ELV-0B = 3.000
ELEVON = 5.000 MACH = .600
BETAO = .000 PHI = .000
DX = .000 DY = .000

RUN NO. 654/ 0 RN/L = 3.27 GRADIENT INTERVAL = -1.00/ 4.00

ALPHAO	DZ	MACH	DX	DY	BETAO	PHI	ALPHAH	BETA	CL	CD	CLM
14.639	-1.095	.59930	-1.94790	-.01490	.00080	.00000	9.77180	.04100	.53620	.13880	.07630
14.640	1.805	.59900	-2.34740	-.01540	.00040	.00000	9.77590	.04040	.55360	.14250	.06800
14.651	6.322	.59930	-2.96170	-.01730	-.00080	.00000	9.76190	.04750	.57770	.14920	.06020
14.669	13.867	.59920	-4.00010	-.01860	-.00120	.00000	9.75180	.03900	.60700	.15770	.05450
14.700	28.918	.59940	-6.07580	-.01170	-.00600	.00000	9.73820	.05370	.65730	.17370	.04440
14.717	43.759	.60060	-8.13400	.00140	-.00650	.00000	9.72610	.04610	.69370	.18470	.03750
14.720	58.717	.59920	-10.22410	.01690	-.01250	.00000	9.72190	.03880	.70080	.19010	.03160
	GRADIENT	.00000	.00000	.00000	.00000	.00000	.00000	.00000	.00000	.00000	.00000

CA20 747/1 02 S1 ORBITER DATA (BGN133) (20 JAN 75)

REFERENCE DATA

SREF = 2690.0000 SQ.FT. XMRP = 1109.0000 IN.XO
LREF = 474.8100 IN. YMRP = .0000 IN.YO
BREF = 936.6800 IN. ZMRP = 375.0000 IN.ZO
SCALE = .0300

PARAMETRIC DATA

ALPHAC = 8.000 BETAC = .000
ELV-1B = .000 ELV-0B = 3.000
ELEVON = 5.000 MACH = .600
BETAO = .000 PHI = .000
DX = 10.000 DY = .000

RUN NO. 658/ 0 RN/L = 3.32 GRADIENT INTERVAL = -1.00/ 4.00

ALPHAO	DZ	MACH	DX	DY	BETAO	PHI	ALPHAH	BETA	CL	CD	CLM
10.250	-3.341	.59930	9.46660	-.00230	.00660	.00000	9.73350	-.00380	.20990	.06890	.03330
10.261	-.279	.60070	9.04960	-.00670	.00710	.00000	9.73400	.00310	.23770	.07160	.02690
10.285	4.305	.60080	8.41940	-.00380	.00540	.00000	9.73010	.00210	.27040	.07590	.02320
10.320	11.768	.60090	7.39060	-.00170	.00420	.00000	9.72910	.00100	.31650	.08260	.02080
10.383	26.778	.59960	5.31340	.00370	-.00080	.00000	9.72150	.00810	.38930	.09360	.01820
10.431	41.918	.60030	3.20170	.01180	-.00050	.00000	9.71970	-.00690	.43620	.10120	.01590
10.441	48.647	.60060	2.26430	.01190	-.00240	.00000	9.71860	.00070	.45060	.10380	.01400
	GRADIENT	.00000	.00000	.00000	.00000	.00000	.00000	.00000	.00000	.00000	.00000

DATE 01 DEC 75 TABULATED SOURCE DATA - CA20

CA20 747/1 02 SI ORBITER DATA (BGNI33) (20 JAN 75)

REFERENCE DATA

SREF = 2690.0000 SQ.FT. XMRP = 1109.0000 IN.XO
LREF = 474.8100 IN. YMRP = .0000 IN.YO
BREF = 936.6800 IN. ZMRP = 375.0000 IN.ZO
SCALE = .0300

PARAMETRIC DATA

ALPHAC = 8.000 BETAC = .000
ELV-IB = .000 ELV-OB = 3.000
ELEVON = 5.000 MACH = .600
BETAO = .000 PHI = .000
DX = 10.000 DY = .000

RUN NO. 660/ 0 RN/L = 3.29 GRADIENT INTERVAL = -1.00/ 4.00

ALPHAO	DZ	MACH	DX	DY	BETAO	PHI	ALPHAW	BETA	CL	CD	CLM
14.520	-1.391	.60010	8.03730	.00340	.00250	.00000	9.76000	-.00500	.48420	.12660	.05980
14.524	1.080	.59980	7.69910	.00410	.00150	.00000	9.75850	-.00550	.50050	.12900	.05430
14.540	6.153	.59910	7.00390	-.00180	.00050	.00000	9.75340	.00220	.53060	.13580	.04960
14.567	13.465	.59920	6.00060	-.00680	-.00040	.00000	9.74660	.01620	.56880	.14470	.04510
14.611	28.593	.59930	3.91600	.00730	-.00720	.00000	9.73550	-.00030	.63150	.16210	.03910
14.634	43.595	.59940	1.83370	.00150	-.00600	.00000	9.72810	.00760	.65800	.17350	.03420
14.648	58.448	.60020	-.23670	.01520	-.01150	.00000	9.72500	.00040	.69090	.18120	.02980
	GRADIENT	.00000	.00000	.00000	.00000	.00000	.00000	.00000	.00000	.00000	.00000

CA20 747/1 02 SI ORBITER DATA (BGNI34) (20 JAN 75)

REFERENCE DATA

SREF = 2690.0000 SQ.FT. XMRP = 1109.0000 IN.XO
LREF = 474.8100 IN. YMRP = .0000 IN.YO
BREF = 936.6800 IN. ZMRP = 375.0000 IN.ZO
SCALE = .0300

PARAMETRIC DATA

ALPHAC = 8.000 BETAC = .000
ELV-IB = .000 ELV-OB = 3.000
ELEVON = 5.000 MACH = .600
BETAO = .000 PHI = .000
DX = 20.000 DY = .000

RUN NO. 668/ 0 RN/L = 3.28 GRADIENT INTERVAL = -1.00/ 4.00

ALPHAO	DZ	MACH	DX	DY	BETAO	PHI	ALPHAW	BETA	CL	CD	CLM
10.184	-3.785	.59970	19.58200	-.01190	.01250	.00000	9.73010	.01060	.19620	.06820	.02320
10.194	.797	.60000	18.95340	-.01600	.01120	.00000	9.73130	.01700	.23450	.07170	.01310
10.227	8.220	.59910	17.92710	-.00760	.00800	.00000	9.72960	.00810	.28310	.07770	.01060
10.297	23.195	.60060	15.84870	-.00440	.00240	.00000	9.72530	.01510	.36190	.08910	.01120
10.347	38.211	.60080	13.75840	-.00420	.00070	.00000	9.72080	.02340	.41630	.09750	.01110
10.366	49.398	.60060	12.19640	.00940	-.00190	.00000	9.72110	.00810	.44370	.10180	.01050
	GRADIENT	.00000	.00000	.00000	.00000	.00000	.00000	.00000	.00000	.00000	.00000

CA20 747/1 02 S1 ORBITER DATA (BGN134) (20 JAN 75)

REFERENCE DATA

SREF = 2690.0000 SQ.FT. XMRP = 1109.0000 IN.XO
LREF = 474.8100 IN. YMRP = .0000 IN.YO
BREF = 936.6800 IN. ZMRP = 375.0000 IN.ZO
SCALE = .0300

PARAMETRIC DATA

ALPHAC = 8.000 BETAC = .000
ELV-IB = .000 ELV-OB = 3.000
ELEVON = 5.000 MACH = .600
BETAO = .000 PHI = .000
DX = 20.000 DY = .000

RUN NO. 667/ 0 RN/L = 3.29 GRADIENT INTERVAL = -1.00/ 4.00

ALPHAO	DZ	MACH	DX	DY	BETAO	PHI	ALPHAW	BETA	CL	CD	CLM
14.434	-1.978	.60080	18.06030	-.00450	.00860	.00000	9.75680	.00220	.45570	.12060	.04590
14.439	1.123	.59910	17.63650	-.00300	.00720	.00000	9.75390	.00130	.47970	.12460	.03890
14.456	5.657	.60090	17.01440	-.00600	.00540	.00000	9.75090	.00810	.50680	.12980	.03590
14.482	13.159	.59930	15.98070	-.00680	.00360	00000	9.74550	.00740	.54650	.13870	.03460
14.529	28.036	.59980	13.92490	-.00740	-.00290	.00000	9.73940	.01440	.61240	.15510	.03310
14.557	42.826	.60040	11.87180	-.00890	-.00280	.00000	9.73310	.01490	.65530	.16760	.03020
14.572	57.824	.60030	9.78330	.00220	-.00830	.00000	9.72650	.00760	.68070	.17580	.02760
	GRADIENT	.00000	.00000	.00000	.00000	.00000	.00000	.00000	.00000	.00000	.00000

CA20 747/1 02 S1 ORBITER DATA (BGN135) (20 JAN 75)

REFERENCE DATA

SREF = 2690.0000 SQ.FT. XMRP = 1109.0000 IN.XO
LREF = 474.8100 IN. YMRP = .0000 IN.YO
BREF = 936.6800 IN. ZMRP = 375.0000 IN.ZO
SCALE = .0300

PARAMETRIC DATA

ALPHAC = 4.000 BETAC = -5.000
ELV-IB = .000 ELV-OB = 3.000
ELEVON = 5.000 MACH = .600
BETAO = .000 PHI = .000
DX = .000 DY = 10.000

RUN NO. 728/ 0 RN/L = 3.27 GRADIENT INTERVAL = -1.00/ 4.00

ALPHAO	DZ	MACH	DX	DY	BETAO	PHI	ALPHAW	BETA	CL	CD	CLM
10.520	-1.686	.59940	.87430	11.02640	.03050	.00000	5.82670	-4.95860	.45300	.10270	.03790
10.517	1.116	.60050	.68300	11.02080	.03090	.00000	5.82390	-4.95160	.45640	.10250	.03400
10.515	5.425	.60030	.33060	11.02730	.02690	.00000	5.81750	-4.96100	.46200	.10280	.03110
10.523	13.266	.60010	-.14640	11.04010	.01690	.00000	5.81350	-4.94970	.47460	.10460	.02780
10.531	28.048	.59920	-1.15190	11.05810	.00140	.00000	5.80280	-4.96350	.49680	.10860	.02250
10.541	43.286	.60080	-2.18980	11.08330	-.00620	.00000	5.79360	-4.96030	.51390	.11180	.01770
	GRADIENT	.00000	.00000	.00000	.00000	.00000	.00000	.00000	.00000	.00000	.00000

CA20 747/1 02 SI ORBITER DATA (BGN136) (20 JAN 75)

REFERENCE DATA

SREF = 2690.0000 SQ.FT. XMRP = 1109.0000 IN.XO
LREF = 474.8100 IN. YMRP = .0000 IN.YO
BREF = 936.6800 IN. ZMRP = 375.0000 IN.ZO
SCALE = .0300

PARAMETRIC DATA

ALPHAC =	4.000	BETAC =	-5.000
ELV-IB =	.000	ELV-OB =	3.000
ELEVON =	5.000	MACH =	.600
BETAO =	.000	PHI =	.000
DX =	10.000	DY =	10.000

RUN NO. 732/ 0 RN/L = 3.26 GRADIENT INTERVAL = -1.00/ 4.00

ALPHAO	DZ	MACH	DX	DY	BETAO	PHI	ALPHAH	BETA	CL	CD	CLN
10.431	-2.314	.59980	10.86780	11.92090	.02560	.00000	5.85030	-5.00450	.41230	.09760	.03100
10.429	1.200	.60050	10.62870	11.91570	.02550	.00000	5.84850	-4.99710	.42220	.09800	.02590
10.436	5.568	.60040	10.32740	11.92110	.02320	.00000	5.84580	-5.00650	.43190	.09840	.02370
10.442	12.949	.60080	9.82710	11.92890	.01650	.00000	5.83880	-5.00300	.44930	.10040	.02190
10.461	28.270	.60060	8.77300	11.95600	.00030	.00000	5.83260	-5.00520	.47840	.10480	.01850
10.477	43.283	.60010	7.73500	11.96800	-.00600	.00000	5.82690	-5.00620	.49810	.10850	.01500
10.478	47.056	.59970	7.47070	11.97270	-.00720	.00000	5.82790	-5.01380	.50190	.10940	.01390
	GRADIENT	.00000	.00000	.00000	.00000	.00000	.00000	.00000	.00000	.00000	.00000

CA20 747/1 02 SI ORBITER DATA (BGN137) (20 JAN 75)

REFERENCE DATA

SREF = 2690.0000 SQ.FT. XMRP = 1109.0000 IN.XO
LREF = 474.8100 IN. YMRP = .0000 IN.YO
BREF = 936.6800 IN. ZMRP = 375.0000 IN.ZO
SCALE = .0300

PARAMETRIC DATA

ALPHAC =	4.000	BETAC =	.000
ELV-IB =	.000	ELV-OB =	3.000
ELEVON =	5.000	MACH =	.600
BETAO =	.000	PHI =	.000
DX =	.000	DY =	10.000

RUN NO. 727/ 0 RN/L = 3.35 GRADIENT INTERVAL = -1.00/ 4.00

ALPHAO	DZ	MACH	DX	DY	BETAO	PHI	ALPHAH	BETA	CL	CD	CLN
10.539	-1.720	.59990	.88540	9.98370	.01890	.00000	5.83340	.03160	.45030	.09900	.04460
10.532	1.145	.59910	.68770	9.97640	.02070	.00000	5.83250	.02160	.45460	.09920	.03880
10.533	5.590	.60050	.38650	9.97520	.01990	.00000	5.82510	.01060	.46230	.10070	.03430
10.535	13.225	.60040	-.13250	9.98060	.01510	.00000	5.81720	-.00130	.47540	.10350	.02950
10.542	28.323	.60040	-1.16330	9.99290	.00450	.00000	5.80900	.00080	.49840	.10830	.02290
10.549	43.196	.60050	-2.17880	10.00810	-.00350	.00000	5.79920	-.00580	.51410	.11170	.01780
	GRADIENT	.00000	.00000	.00000	.00000	.00000	.00000	.00000	.00000	.00000	.00000

CA20 747/1 02 S1 ORBITER DATA (BGN138) (20 JAN 75)

REFERENCE DATA

SREF = 2690.0000 SQ.FT. XMRP = 1109.0000 IN.XO
LREF = 474.8100 IN. YMRP = .0000 IN.YO
BREF = 936.6800 IN. ZMRP = 375.0000 IN.ZO
SCALE = .0300

PARAMETRIC DATA

ALPHAC =	4.000	BETAC =	.000
ELV-1B =	.000	ELV-0B =	3.000
ELEVON =	5.000	MACH =	.600
BETAO =	.000	PHI =	.000
DX =	10.000	DY =	10.000

RUN NO. 731/ 0 RN/L = 3.29 GRADIENT INTERVAL = -1.00/ 4.00

ALPHAO	DZ	MACH	DX	DY	BETAO	PHI	ALPHAW	BETA	CL	CD	CLM
10.438	-1.917	.60030	10.85750	9.96490	.01980	.00000	5.85620	.06930	.41480	.09410	.03570
10.439	1.309	.60060	10.63520	9.95920	.02020	.00000	5.85440	.06980	.42390	.09480	.03020
10.441	5.640	.60020	10.33640	9.95380	.01950	.00000	5.85330	.07270	.43370	.09600	.02660
10.446	13.088	.60080	9.83100	9.95040	.01540	.00000	5.84330	.06110	.45080	.09890	.02340
10.464	28.151	.60020	8.79230	9.95980	.00380	.00000	5.83680	.07070	.47910	.10420	.01880
10.475	43.272	.59990	7.75180	9.98720	-.00320	.00000	5.82780	.05640	.49910	.10830	.01500
10.474	47.051	.59910	7.49000	9.98650	-.00590	.00000	5.82660	.06460	.50250	.10900	.01370
	GRADIENT	.00000	.00000	.00000	.00000	.00000	.00000	.00000	.00000	.00000	.00000

CA20 747/1 02 S1 ORBITER DATA (BGN139) (20 JAN 75)

REFERENCE DATA

SREF = 2690.0000 SQ.FT. XMRP = 1109.0000 IN.XO
LREF = 474.8100 IN. YMRP = .0000 IN.YO
BREF = 936.6800 IN. ZMRP = 375.0000 IN.ZO
SCALE = .0300

PARAMETRIC DATA

ALPHAC =	4.000	BETAC =	5.000
ELV-1B =	.000	ELV-0B =	3.000
ELEVON =	5.000	MACH =	.600
BETAO =	.000	PHI =	.000
DX =	.000	DY =	10.000

RUN NO. 729/ 0 RN/L = 3.25 GRADIENT INTERVAL = -1.00/ 4.00

ALPHAO	DZ	MACH	DX	DY	BETAO	PHI	ALPHAW	BETA	CL	CD	CLM
10.550	-1.816	.60090	.88480	8.78140	.04000	.00000	5.83180	5.12510	.44960	.09750	.05630
10.536	1.291	.59920	.67080	8.78380	.03380	.00000	5.82790	5.11980	.45430	.09820	.04710
10.535	5.717	.60090	.37070	8.78850	.02850	.00000	5.82240	5.10560	.46360	.10080	.04000
10.534	13.051	.59980	-.13060	8.79650	.02180	.00000	5.81730	5.09230	.47740	.10360	.03290
10.539	28.194	.59940	-1.16040	8.80860	.00820	.00000	5.80400	5.09540	.50120	.10870	.02440
10.541	43.343	.60000	-2.19520	8.81680	.00080	.00000	5.79690	5.10330	.51660	.11190	.01830
	GRADIENT	.00000	.00000	.00000	.00000	.00000	.00000	.00000	.00000	.00000	.00000

CA20 747/1 02 S1 ORBITER DATA (BGN140) (20 JAN 75)

REFERENCE DATA

SREF = 2690.0000 SQ.FT. XMRP = 1109.0000 IN.XO
LREF = 474.8100 IN. YMRP = .0000 IN.YO
BREF = 936.6800 IN. ZMRP = 375.0000 IN.ZO
SCALE = .0300

PARAMETRIC DATA

ALPHAC = 4.000 BETAC = 5.000
ELV-1B = .000 ELV-0B = 3.000
ELEVON = 5.000 MACH = .600
BETAO = .000 PHI = .000
DX = 10.000 DY = 10.000

RUN NO. 733/ 0 RN/L = 3.26 GRADIENT INTERVAL = -1.00/ 4.00

ALPHAO	DZ	MACH	DX	DY	BETAO	PHI	ALPHAW	BETA	CL	CD	CLM
10.454	-1.821	.60040	10.83530	7.94520	.03540	.00000	5.85460	5.01710	.41050	.09020	.04660
10.451	1.281	.60080	10.62330	7.94600	.03110	.00000	5.85280	5.01310	.42050	.09180	.03880
10.450	5.640	.60050	10.32500	7.95330	.02550	.00000	5.84960	4.99980	.43320	.09450	.03220
10.454	13.081	.60000	9.81810	7.95780	.01940	.00000	5.84150	4.99280	.45250	.09870	.02640
10.469	28.314	.60080	8.77030	7.96820	.00680	.00000	5.83440	4.99560	.48180	.10470	.02020
10.478	43.187	.60060	7.74450	7.97620	.00060	.00000	5.82840	4.99600	.50060	.10860	.01570
10.479	47.015	.60040	7.47410	7.97880	-.00120	.00000	5.83180	4.99630	.50420	.10920	.01450
	GRADIENT	.00000	.00000	.00000	.00000	.00000	.00000	.00000	.00000	.00000	.00000

CA20 747/1 01 S1 ORBITER DATA (BGN141) (20 JAN 75)

REFERENCE DATA

SREF = 2690.0000 SQ.FT. XMRP = 1109.0000 IN.XO
LREF = 474.8100 IN. YMRP = .0000 IN.YO
BREF = 936.6800 IN. ZMRP = 375.0000 IN.ZO
SCALE = .0300

PARAMETRIC DATA

ALPHAC = 4.000 BETAC = .000
ELV-1B = 10.000 ELV-0B = 13.000
ELEVON = 5.000 MACH = .600
BETAO = .000 PHI = .000
DX = .000 DY = .000

RUN NO. 707/ 0 RN/L = 3.25 GRADIENT INTERVAL = -1.00/ 4.00

ALPHAO	DZ	MACH	DX	DY	BETAO	PHI	ALPHAW	BETA	CL	CD	CLM
10.523	-1.884	.60080	.87920	-.01420	.01180	.00000	5.83190	.00050	.40640	.08160	.06800
10.504	.978	.59910	.68440	-.01200	.01100	.00000	5.83240	.00020	.42280	.08090	.04940
10.501	5.523	.59930	.37680	-.01360	.01060	.00000	5.82540	.00740	.43760	.08220	.03980
10.504	13.055	.59950	-.13550	-.00840	.00810	.00000	5.81690	-.00060	.45840	.08430	.03020
10.516	28.002	.59950	-1.15670	-.00310	.00260	.00000	5.80490	.00670	.48730	.08890	.02140
10.523	42.970	.59980	-2.18400	.00060	.00280	.00000	5.79720	-.00120	.50530	.09180	.01550
	GRADIENT	.00000	.00000	.00000	.00000	.00000	.00000	.00000	.00000	.00000	.00000

CA20 747/1 01 SI ORBITER DATA (BGN141) (20 JAN 75)

REFERENCE DATA

SREF = 2690.0000 SQ.FT. XMRP = 1109.0000 IN.XO
LREF = 474.8100 IN. YMRP = .0000 IN.YO
BREF = 936.6800 IN. ZMRP = 375.0000 IN.ZO
SCALE = .0300

PARAMETRIC DATA

ALPHAC = 4.000 BETAC = .000
ELV-IB = 10.000 ELV-OB = 13.000
ELEVON = 5.000 MACH = .600
BETAO = .000 PHI = .000
DX = .000 DY = .000

RUN NO. 708/ 0 RN/L = 3.19 GRADIENT INTERVAL = -1.00/ 4.00

ALPHAO	DZ	MACH	DX	DY	BETAO	PHI	ALPHAW	BETA	CL	CD	CLM
14.811	.024	.60020	-.26990	-.01340	.00790	.00000	5.86260	-.00700	.67620	.16330	.08230
14.784	3.045	.59940	-.47840	-.01140	.00760	.00000	5.85980	-.00050	.68460	.16050	.06360
14.771	7.498	.59900	-.78610	-.01170	.00750	.00000	5.85370	-.00070	.68070	.16130	.05360
14.765	14.984	.60030	-1.29790	-.00650	.00470	.00000	5.83950	-.00790	.69980	.16510	.04320
14.762	29.993	.59970	-2.32360	.00060	.00060	.00000	5.81920	-.00140	.71900	.17090	.03170
14.773	45.117	.60060	-3.36230	.00450	-.00040	.00000	5.80690	-.00140	.73030	.17480	.02480
	GRADIENT	-.00026	-.06903	.00065	-.00010	.00000	-.00093	.00215	.00278	-.00093	-.00619

CA20 747/1 01 SI ORBITER DATA (BGN142) (20 JAN 75)

REFERENCE DATA

SREF = 2690.0000 SQ.FT. XMRP = 1109.0000 IN.XO
LREF = 474.8100 IN. YMRP = .0000 IN.YO
BREF = 936.6800 IN. ZMRP = 375.0000 IN.ZO
SCALE = .0300

PARAMETRIC DATA

ALPHAC = 4.000 BETAC = .000
ELV-IB = -10.000 ELV-OB = -7.000
ELEVON = 5.000 MACH = .600
BETAO = .000 PHI = .000
DX = .000 DY = .000

RUN NO. 709/ 0 RN/L = 3.26 GRADIENT INTERVAL = -1.00/ 4.00

ALPHAO	DZ	MACH	DX	DY	BETAO	PHI	ALPHAW	BETA	CL	CD	CLM
10.510	-2.321	.59970	.91020	-.01830	.01330	.00000	5.87430	-.00070	.39190	.07860	.07460
10.492	.765	.59940	.70150	-.01330	.01170	.00000	5.87190	-.00110	.41050	.07810	.05340
10.488	5.227	.60050	.40050	-.01330	.01100	.00000	5.86690	-.00160	.42760	.07890	.04140
10.491	12.822	.60020	-.11430	-.01030	.00900	.00000	5.85660	-.00190	.44760	.08170	.03270
10.501	27.769	.60030	-1.13010	-.00340	.00300	.00000	5.84560	.00540	.47920	.08660	.02270
10.504	42.754	.59920	-2.15880	-.00220	.00320	.00000	5.84080	.00530	.49790	.09000	.01650
	GRADIENT	.00000	.00000	.00000	.00000	.00000	.00000	.00000	.00000	.00000	.00000

RUN NO. 710/ 0 RN/L = 3.22 GRADIENT INTERVAL = -1.00/ 4.00

ALPHAO	DZ	MACH	DX	DY	BETAO	PHI	ALPHAW	BETA	CL	CD	CLM
14.880	.715	.59990	-.33240	-.01950	.00830	.00000	5.90190	-.00850	.66220	.15910	.08410
14.855	3.826	.60000	-.54650	-.01550	.00780	.00000	5.89770	-.00950	.66880	.15760	.06680
14.843	8.214	.59990	-.84760	-.01270	.00700	.00000	5.89190	-.00240	.67490	.15840	.05680
14.833	15.830	.59920	-1.36850	-.00690	.00540	.00000	5.87920	-.00950	.68650	.16180	.04530
14.832	30.666	.59930	-2.37840	.00030	.00040	.00000	5.86080	.00500	.70630	.16820	.03310
14.845	45.837	.60070	-3.41720	.00350	.00010	.00000	5.84980	-.00250	.71970	.17250	.02610
	GRADIENT	.00003	-.06822	.00129	-.00013	.00000	-.00135	-.00032	.00212	-.00048	-.00556

ORIGINAL PAGE IS OF POOR QUALITY

CA20 747/1 01 61 ORBITER DATA (BGN143) (20 JAN 75)

REFERENCE DATA

SREF = 2690.0000 SQ.FT. XMRP = 1109.0000 IN.XO
LREF = 474.8100 IN. YMRP = .0000 IN.YO
BREF = 936.6800 IN. ZMRP = 375.0000 IN.ZO
SCALE = .0300

PARAMETRIC DATA

ALPHAC =	4.000	BETAC =	.000
RUD-U =	15.000	RUD-L =	15.000
ELEVON =	5.000	AILRON =	.000
BETAO =	.000	PHI =	.000
DX =	.000	DY =	.000

RUN NO. 711/ 0 RN/L = 3.26 GRADIENT INTERVAL = -1.00/ 4.00

ALPHAO	DZ	MACH	DX	DY	BETAO	PHI	ALPHAW	BETA	CL	CD	CLM
10.504	-2.028	.60040	.90180	-.00790	.00910	.00000	5.83170	.02080	.40130	.08040	.07000
10.465	.931	.60010	.70250	-.00650	.00820	.00000	5.83280	.02910	.41960	.07960	.04980
10.480	5.560	.59930	.38950	-.00470	.00730	.00000	5.82470	.02230	.43370	.08080	.04010
10.486	12.957	.60060	-.11140	-.00170	.00580	.00000	5.81620	.02310	.45220	.08370	.03240
10.495	27.883	.59980	-1.12660	-.00090	.00160	.00000	5.80430	.03860	.48350	.08800	.02160
10.513	42.996	.60040	-2.16480	.00170	.00120	.00000	5.79700	.03140	.50130	.09110	.01590
	GRADIENT	.00000	.00000	.00000	.00000	.00000	.00000	.00000	.00000	.00000	.00000

RUN NO. 712/ 0 RN/L = 3.23 GRADIENT INTERVAL = -1.00/ 4.00

ALPHAO	DZ	MACH	DX	DY	BETAO	PHI	ALPHAW	BETA	CL	CD	CLM
14.850	.267	.59970	-.28590	-.00380	.00380	.00000	5.86580	.01490	.67960	.16350	.07480
14.835	3.331	.60060	-.49550	-.00180	.00300	.00000	5.86000	.02250	.68240	.16220	.06370
14.823	7.779	.59990	-.80040	-.00110	.00300	.00000	5.85040	.02240	.68630	.16300	.05560
14.816	15.438	.60000	-1.32290	.00080	.00190	.00000	5.83870	.02460	.69950	.16570	.04290
14.812	30.319	.60000	-2.33750	.00670	-.00120	.00000	5.82090	.02360	.71710	.17190	.03260
14.814	45.332	.60030	-3.36420	.00880	-.00280	.00000	5.80920	.03150	.73050	.17510	.02420
	GRADIENT	.00029	-.06840	.00065	-.00026	.00000	-.00189	.00248	.00091	-.00042	-.00362

CA20 747/1 02 S1 ORBITER DATA (BGN144) (20 JAN 75)

REFERENCE DATA

SREF = 2690.0000 SQ.FT. XMRP = 1109.0000 IN.XO
LREF = 474.8100 IN. YMRP = .0000 IN.YO
BREF = 936.6800 IN. ZMRP = 375.0000 IN.ZO
SCALE = .0300

PARAMETRIC DATA

ALPHAC =	4.000	BETAC =	.000
RUD-U =	15.000	RUD-L =	15.000
ELEVON =	5.000	AILRON =	.000
BETAO =	.000	PHI =	.000
DX =	.000	DY =	.000

RUN NO. 725/ 0 RN/L = 3.35 GRADIENT INTERVAL = -1.00/ 4.00

ALPHAO	DZ	MACH	DX	DY	BETAO	PHI	ALPHAH	BETA	CL	CD	CLM
10.493	-2.198	.59920	.86940	-.02120	.00900	.00000	5.83560	.04360	.32700	.07420	.09430
10.490	.873	.60080	.65950	-.01790	.00720	.00000	5.83230	.04430	.33490	.07520	.08560
10.498	5.397	.60040	.34600	-.01580	.00630	.00000	5.82620	.04540	.34500	.07720	.07940
10.503	12.963	.60040	-.17060	-.01280	.00430	.00000	5.82090	.04640	.36120	.08040	.07360
10.527	28.053	.60080	-1.20520	-.00340	-.00140	.00000	5.81010	.05480	.38870	.08580	.06620
10.533	42.969	.59970	-2.22510	-.00150	-.00120	.00000	5.80140	.05530	.40660	.08930	.06100
	GRADIENT	.00000	.00000	.00000	.00000	.00000	.00000	.00000	.00000	.00000	.00000

CA20 747/1 01 S1 ORBITER DATA (BGN145) (20 JAN 75)

REFERENCE DATA

SREF = 2690.0000 SQ.FT. XMRP = 1109.0000 IN.XO
LREF = 474.8100 IN. YMRP = .0000 IN.YO
BREF = 936.6800 IN. ZMRP = 375.0000 IN.ZO
SCALE = .0300

PARAMETRIC DATA

ALPHAC =	4.000	BETAC =	.000
ELV-IB =	.000	ELV-OB =	3.000
ELEVON =	.000	MACH =	.600
BETAO =	.000	PHI =	.000
DX =	.000	DY =	.000

RUN NO. 719/ 0 RN/L = 3.37 GRADIENT INTERVAL = -1.00/ 4.00

ALPHAO	DZ	MACH	DX	DY	BETAO	PHI	ALPHAH	BETA	CL	CD	CLM
10.508	-2.315	.59950	.86160	-.02240	.01230	.00000	5.83900	.01600	.29450	.05940	.12090
10.485	.910	.60010	.64410	-.01560	.01010	.00000	5.83720	.00790	.31570	.05840	.09500
10.479	5.273	.60050	.34780	-.01470	.00900	.00000	5.83290	.00740	.33010	.05900	.08380
10.493	12.814	.59990	-.17030	-.01270	.00720	.00000	5.82510	.00680	.35040	.06170	.07550
10.514	27.985	.59990	-1.20940	-.00700	.00240	.00000	5.81500	.01410	.38100	.06670	.06640
10.516	42.855	.60060	-2.22930	-.00590	.00230	.00000	5.81080	.01410	.40300	.06950	.06210
	GRADIENT	.00000	.00000	.00000	.00000	.00000	.00000	.00000	.00000	.00000	.00000

RUN NO. 720/ 0 RN/L = 3.36 GRADIENT INTERVAL = -1.00/ 4.00

ALPHAO	DZ	MACH	DX	DY	BETAO	PHI	ALPHAH	BETA	CL	CD	CLM
14.834	.261	.59990	-.35440	-.01240	.00660	.00000	5.87110	.00780	.57300	.13110	.12960
14.809	3.316	.60070	-.56180	-.01030	.00610	.00000	5.86790	.00710	.58440	.12930	.10810
14.796	7.681	.60060	-.86160	-.00870	.00450	.00000	5.85940	.01500	.59020	.12990	.09820
14.787	15.322	.60020	-1.38380	-.00440	.00320	.00000	5.84680	.00720	.60300	.13290	.08630
14.785	30.199	.60020	-2.40060	.00200	.00030	.00000	5.83010	.01380	.62340	.13900	.07400
14.785	45.162	.59980	-3.43280	.00150	-.00110	.00000	5.82200	.01400	.63280	.14260	.06920
	GRADIENT	.00026	-.06788	.00069	-.00016	.00000	-.00105	-.00023	.00373	-.00059	-.00704

CA20 747/1 01 S1 ORBITER DATA (BGN145) (20 JAN 75)

REFERENCE DATA

SREF =	2690.0000 SQ.FT.	XHRP =	1109.0000 IN.XO		
LREF =	474.8100 IN.	YHRP =	.0000 IN.YO		
BREF =	936.6800 IN.	ZHRP =	375.0000 IN.ZO		
SCALE =	.0300				

PARAMETRIC DATA

ALPHAC =	4.000	BETAC =	.000
ELV-IB =	.000	ELV-OB =	3.000
ELEVON =	10.000	MACH =	.600
BETAO =	.000	PHI =	.000
DX =	.000	DY =	.000

RUN NO. 714/ 0 RN/L = 3.32 GRADIENT INTERVAL = -1.00/ 4.00

ALPHAO	DZ	MACH	DX	DY	BETAO	PHI	ALPHAH	BETA	CL	CD	CLM
10.053	-1.753	.60000	.91190	-.01320	.01160	.00000	5.84170	.00730	.50590	.10840	.02260
10.538	1.319	.59950	.70500	-.01080	.01060	.00000	5.84200	-.00080	.52420	.10760	.00510
10.533	5.976	.59920	.39120	-.00710	.00880	.00000	5.83500	-.00140	.54040	.10870	-.00610
10.546	13.370	.59940	-.11340	-.00420	.00710	.00000	5.82500	-.00930	.55980	.11230	-.01380
10.559	28.434	.59990	-1.13730	-.00290	.00230	.00000	5.81090	.01370	.59060	.11710	-.02340
10.566	43.399	.60040	-2.16030	.00340	.00160	.00000	5.80210	-.00170	.60770	.12030	-.02900
	GRADIENT	.00000	.00000	.00000	.00000	.00000	.00000	.00000	.00000	.00000	.00000

RUN NO. 715/ 0 RN/L = 3.26 GRADIENT INTERVAL = -1.00/ 4.00

ALPHAO	DZ	MACH	DX	DY	BETAO	PHI	ALPHAH	BETA	CL	CD	CLM
14.836	.243	.60050	-.21980	.00160	.00640	.00000	5.87510	-.00800	.77340	.19830	.03580
14.814	3.412	.59960	-.43820	.00680	.00600	.00000	5.87140	-.00830	.78090	.19710	.01930
14.803	7.911	.60000	-.74500	.00770	.00520	.00000	5.86270	.00650	.78590	.19820	.01000
14.796	15.416	.60060	-1.25670	.01250	.00400	.00000	5.84880	-.00140	.79520	.20170	.00000
14.790	30.282	.60080	-2.27070	.01570	-.00090	.03000	5.82830	-.00970	.81010	.20960	-.01220
14.791	45.331	.59950	-3.30390	.01700	-.00250	.00000	5.81460	-.00190	.82210	.21280	-.01860
	GRADIENT	-.00028	-.06692	.00164	-.00013	.00000	-.00117	-.00009	.00237	-.00038	-.00521

CA20 747/1 01 S1 ORBITER DATA (BGN147) (20 JAN 75)

REFERENCE DATA

SREF = 2690.0000 SQ.FT. XMRP = 1109.0000 IN.XO
LREF = 474.8100 IN. YMRP = .0000 IN.YO
BREF = 936.6800 IN. ZMRP = 375.0000 IN.ZO
SCALE = .0300

PARAMETRIC DATA

ALPHAC = 4.000 BETAC = .000
ELV-IB = .000 ELV-OB = 3.000
ELEVON = 10.000 MACH = .300
BETAO = .000 PHI = .000
DX = .000 DY = .000

RUN NO. 717/ 0 RN/L = 1.89 GRADIENT INTERVAL = -1.00/ 4.00

ALPHAO	DZ	MACH	DX	DY	BETAO	PHI	ALPHAH	BETA	CL	CD	CLM
10.141	-2.619	.29950	.81180	.00220	.00360	.00000	5.83780	-.01830	.47890	.09070	.00960
10.136	.296	.29970	.61310	.00380	.00280	.00000	5.83750	-.01850	.49870	.09020	-.01020
10.135	4.872	.30050	.30110	.00390	.00260	.00000	5.83370	-.01870	.51100	.09150	-.01580
10.138	12.202	.29950	-.20310	.00500	.00160	.00000	5.82540	-.01690	.52970	.09460	-.02310
10.139	26.995	.29920	-1.21700	.00550	.00010	.00000	5.81450	-.01120	.55800	.09860	-.03070
10.142	42.221	.30030	-2.26320	.00710	-.00030	.00000	5.80700	-.01130	.57190	.10120	-.03400
	GRADIENT	.00000	.00000	.00000	.00000	.00000	.00000	.00000	.00000	.00000	.00000

CA20 747/1 01 S1 ORBITER DATA (BGN148) (20 JAN 75)

REFERENCE DATA

SREF = 2690.0000 SQ.FT. XMRP = 1109.0000 IN.XO
LREF = 474.8100 IN. YMRP = .0000 IN.YO
BREF = 936.6800 IN. ZMRP = 375.0000 IN.ZO
SCALE = .0300

PARAMETRIC DATA

ALPHAC = 4.000 BETAC = .000
ELV-IB = .000 ELV-OB = 3.000
ELEVON = 10.000 MACH = .700
BETAO = .000 PHI = .000
DX = .000 DY = .000

RUN NO. 716/ 0 RN/L = 3.54 GRADIENT INTERVAL = -1.00/ 4.00

ALPHAO	DZ	MACH	DX	DY	BETAO	PHI	ALPHAH	BETA	CL	CD	CLM
10.694	-1.671	.69950	1.00630	-.00650	.00800	.00000	5.84060	.00160	.53280	.12700	.02690
10.676	1.352	.69940	.80310	-.00020	.00550	.00000	5.84050	-.00650	.54950	.12670	.01000
10.669	5.761	.69990	.50890	.00080	.00430	.00000	5.83300	.00040	.55530	.12820	-.00150
10.672	13.248	.69970	.00210	.00210	.00320	.00000	5.82130	-.00760	.58230	.13160	-.00950
10.678	28.136	.69950	-1.01140	.00480	-.00020	.00000	5.80840	-.01510	.60590	.13590	-.01810
10.687	43.386	.70020	-2.04590	.00670	-.00150	.00000	5.79430	-.00790	.62500	.14090	-.02500
	GRADIENT	.00000	.00000	.00000	.00000	.00000	.00000	.00000	.00000	.00000	.00000

CA20 747/1 01 S1 ORBITER DATA (BGN1491 (20 JAN 75)

REFERENCE DATA

SREF = 2689.0000 SQ.FT. XMRP = 1109.0000 IN.XO
LREF = 474.8100 IN. YMRP = .0000 IN.YO
BREF = 936.6800 IN. ZMRP = 375.0000 IN.ZO
SCALE = .0300

PARAMETRIC DATA

ALPHAC =	4.000	BETAC =	.000
RUD-U =	.000	RUD-L =	.000
ELEVON =	5.000	AILRON =	-10.000
BETAO =	.000	PHI =	.000
DX =	.000	DY =	.000

RUN NO. 722/ 0 RN/L = 3.33 GRADIENT INTERVAL = -1.00/ 4.00

ALPHAO	DZ	MACH	DX	DY	BETAO	PHI	ALPHAW	BETA	CL	CD	CLM
10.503	-2.010	.59960	.88090	.25100	-.08650	.00000	5.85820	.01850	.41350	.08480	.05870
10.487	1.016	.60000	.68680	.25740	-.09060	.00000	5.85820	.01730	.43080	.08440	.04020
10.482	5.470	.60000	.39360	.26120	-.09370	.00000	5.85130	.01560	.44550	.08500	.03000
10.481	12.919	.59940	-.12140	.26800	-.09810	.00600	5.84070	.00120	.46790	.08780	.01910
10.494	28.155	.59990	-1.16420	.27880	-.10760	.00000	5.82880	.01190	.50050	.09310	.00710
10.501	42.900	.60060	-2.17720	.28710	-.11030	.00000	5.82100	.00890	.51960	.09670	.00020
	GRADIENT	.00000	.00000	.00000	.00000	.00000	.00000	.00000	.00000	.00000	.00000

RUN NO. 723/ 0 RN/L = 3.28 GRADIENT INTERVAL = -1.00/ 4.00

ALPHAO	DZ	MACH	DX	DY	BETAO	PHI	ALPHAW	BETA	CL	CD	CLM
14.792	.127	.60030	-.27480	.24900	-.09720	.00000	5.68590	.01450	.69230	.16890	.06120
14.780	2.855	.59940	-.46950	.25950	-.09840	.00000	5.68230	.01270	.68750	.16530	.05780
14.769	7.573	.59960	-.78580	.26120	-.10000	.00000	5.67690	.02520	.69110	.16550	.04980
14.755	15.007	.60020	-1.29790	.26930	-.10580	.00000	5.66080	.01260	.71060	.16920	.03040
14.753	30.023	.60080	-2.32950	.28280	-.11230	.00000	5.64740	.00450	.73160	.17610	.01680
14.748	45.056	.60010	-3.36330	.28550	-.11380	.00000	5.63310	.00650	.74360	.17960	.00850
	GRADIENT	-.00033	-.07103	.00395	-.00044	.00000	-.00128	-.00086	-.00176	-.00132	-.00125

ORIGINAL PAGE IS
OF POOR QUALITY

CA20 747/0 01 SI AT38 AT39 ORBITER DATA (CGN040) (20 JAN 75)

REFERENCE DATA

SREF = 2690.0000 SQ.FT. XMRP = 1109.0000 IN.XO
LREF = 474.8100 IN. YMRP = .0000 IN.YO
BREF = 936.6800 IN. ZMRP = 375.0000 IN.ZO
SCALE = .0300

PARAMETRIC DATA

ALPHAC =	.000	BETAC =	.000
ELV-IB =	.000	ELV-OB =	3.000
ELEVON =	5.000	MACH =	.600
BETAO =	.000	PHI =	.000
DX =	.000	DY =	.000

RUN NO. 619/ 0 RN/L = 3.37 GRADIENT INTERVAL = -1.00/ 4.00

ALPHAO	DZ	MACH	DX	DY	BETAO	PHI	ALPHAH	BETA	CY	CLN	CSL
8.543	1.907	.59950	3.60120	-.03230	.01640	.00000	1.94510	.05340	-.00260	-.00090	-.00330
8.538	4.646	.60050	3.59700	-.02820	.01400	.00000	1.94340	.05390	-.00210	-.00080	-.00290
8.531	9.288	.59950	3.59490	-.02610	.01230	.00000	1.94340	.05390	-.00140	-.00090	-.00270
8.529	17.091	.59990	3.59790	-.02240	.00940	.00000	1.92880	.05010	-.00110	-.00060	-.00250
8.525	31.807	.59930	3.60800	-.01480	.00500	.00000	1.91450	.05980	-.00010	-.00040	-.00230
8.523	38.614	.60000	3.61500	-.01210	.00510	.00000	1.91010	.05200	.00010	-.00060	-.00240
	GRADIENT	.00000	.00000	.00000	.00000	.00000	.00000	.00000	.00000	.00000	.00000

CA20 747/0 01 SI AT38 AT39 ORBITER DATA (CGN041) (20 JAN 75)

REFERENCE DATA

SREF = 2690.0000 SQ.FT. XMRP = 1109.0000 IN.XO
LREF = 474.8100 IN. YMRP = .0000 IN.YO
BREF = 936.6800 IN. ZMRP = 375.0000 IN.ZO
SCALE = .0300

PARAMETRIC DATA

ALPHAC =	4.000	BETAC =	.000
ELV-IB =	.000	ELV-OB =	3.000
ELEVON =	5.000	MACH =	.600
BETAO =	.000	PHI =	.000
DX =	.000	DY =	.000

RUN NO. 621/ 0 RN/L = 3.27 GRADIENT INTERVAL = -1.00/ 4.00

ALPHAO	DZ	MACH	DX	DY	BETAO	PHI	ALPHAH	BETA	CY	CLN	CSL
12.656	.965	.59940	-.06780	-.01860	.00680	.00000	5.83310	.06160	-.00090	.00000	-.00330
12.653	4.780	.59980	-.33520	-.01570	.00350	.00000	5.82950	.06890	-.00040	.00020	-.00280
12.648	8.551	.59960	-.59320	-.01060	.00330	.00000	5.82270	.04540	-.00040	.00020	-.00250
12.651	15.655	.60020	-1.07500	-.00980	.00120	.00000	5.81040	.05270	-.00020	.00040	-.00220
12.672	30.655	.60070	-2.11910	-.00380	-.00410	.00000	5.79490	.06010	.00060	.00080	-.00200
12.678	45.578	.60050	-3.13100	-.00250	-.00480	.00000	5.78510	.06010	.00080	.00090	-.00240
12.678	60.229	.59990	-4.14410	.01270	-.01300	.00000	5.77850	.05240	.00260	.00140	-.00250
	GRADIENT	.00000	.00000	.00000	.00000	.00000	.00000	.00000	.00000	.00000	.00000

CA20 747/0 01 S1 AT38 AT39 ORBITER DATA (CGN042) (20 JAN 75)

REFERENCE DATA

SREF =	2690.0000 SQ.FT.	XMRP =	1109.0000 IN.XO
LREF =	474.8100 IN.	YMRP =	.0000 IN.YO
BREF =	936.6800 IN.	ZMRP =	375.0000 IN.ZO
SCALE =	.0300		

PARAMETRIC DATA

ALPHAC =	8.000	BETAC =	.000
ELV-IB =	.000	ELV-OB =	3.000
ELEVON =	5.000	MACH =	.600
BETAO =	.000	PHI =	.000
DX =	.000	DY =	.000

RUN NO. 620/ 0 RN/L = 3.33 GRADIENT INTERVAL = -1.00/ 4.00

ALPHAO	DZ	MACH	DX	DY	BETAO	PHI	ALPHAH	BETA	CY	CLN	CSL
16.829	3.116	.59950	-2.43120	-.02120	.00530	.00000	9.76940	.03940	-.00280	.00090	-.00090
16.828	6.039	.59960	-2.83530	-.01980	.00420	.00000	9.76310	.05540	-.00190	.00080	-.00180
16.849	18.368	.60060	-4.53450	-.00890	.00070	.00000	9.74570	.06220	.00040	.00050	-.00260
16.854	32.998	.60080	-6.55190	.00410	-.00220	.00000	9.73110	.06210	.00280	-.00010	-.00360
16.870	48.151	.59930	-8.66310	.01220	-.00550	.00000	9.72170	.05490	.00380	.00000	-.00350
16 866	63.071	.59990	-10.74270	.02870	-.01480	.00000	9.71610	.06290	.00630	.00030	-.00370
	GRADIENT	.00000	.00000	.00000	.00000	.00000	.00000	.00000	.00000	.00000	.00000

CA20 747/0 01 S1 AT38 AT39 ORBITER DATA (CGN043) (20 JAN 75)

REFERENCE DATA

SREF =	2690.0000 SQ.FT.	XMRP =	1109.0000 IN.XO
LREF =	474.8100 IN.	YMRP =	.0000 IN.YO
BREF =	936.6800 IN.	ZMRP =	375.0000 IN.ZO
SCALE =	.0300		

PARAMETRIC DATA

ALPHAC =	4.000	BETAC =	-5.000
ELV-IB =	.000	ELV-OB =	3.000
ELEVON =	5.000	MACH =	.600
BETAO =	-5.000	PHI =	.000
DX =	.000	DY =	.000

RUN NO. 622/ 0 RN/L = 3.34 GRADIENT INTERVAL = -1.00/ 4.00

ALPHAO	DZ	MACH	DX	DY	BETAO	PHI	ALPHAH	BETA	CY	CLN	CSL
12.644	1.130	.59920	-.11220	1.40960	-5.21950	.00000	5.83690	-4.98500	.04090	.01570	.01100
12.623	4.337	.59930	-.33720	1.40240	-5.22240	.00000	5.82570	-4.97960	.03880	.01780	.00930
12.617	8.510	.59940	-.62560	1.42200	-5.22820	.00000	5.82070	-4.98110	.04230	.01730	.00750
12.618	16.134	.59970	-1.14280	1.44840	-5.23870	.00000	5.80320	-4.98220	.04640	.01720	.00590
12.630	31.004	.59900	-2.16520	1.47370	-5.24900	.00000	5.79220	-4.98470	.05030	.01720	.00450
12.635	46.251	.59950	-3.21640	1.48210	-5.25230	.00000	5.78510	-4.97510	.05180	.01710	.00370
12.636	60.055	.59910	-4.17150	1.48950	-5.25550	.00000	5.77980	-4.98260	.05250	.01740	.00320
	GRADIENT	.00000	.00000	.00000	.00000	.00000	.00000	.00000	.00000	.00000	.00000

CA20 747/0 02 S1 AT38 AT39 ORBITER DATA (CGN044) (20 JAN 75)

REFERENCE DATA

SREF = 2690.0000 SQ.FT. XMRP = 1109.0000 IN.XO
LREF = 474.8100 IN. YMRP = .0000 IN.YO
BREF = 936.6800 IN. ZMRP = 375.0000 IN.ZO
SCALE = .0300

PARAMETRIC DATA

ALPHAC = 4.000 BETAC = -5.000
ELV-IB = .000 ELV-OB = 3.000
ELEVON = 5.000 MACH = .600
BETAO = -5.000 PHI = .000
DX = .000 DY = .000

RUN NO. 623/ 0 RN/L = 3.33 GRADIENT INTERVAL = -1.00/ 4.00

ALPHAO	DZ	MACH	DX	DY	BETAO	PHI	ALPHAW	BETA	CY	CLN	CSL
12.689	1.078	.60000	-.11690	1.45730	-5.21700	.00000	5.83830	-4.98900	.05240	.00860	.01250
12.667	4.227	.60030	-.34250	1.45710	-5.21810	.00000	5.83370	-4.99230	.05190	.00950	.01070
12.664	8.517	.60080	-.63820	1.47060	-5.22580	.00000	5.82500	-4.98420	.05390	.01010	.00880
12.671	16.093	.60020	-1.16010	1.48740	-5.23480	.00000	5.81380	-4.97680	.05660	.01060	.00720
12.680	31.112	.59970	-2.19170	1.51140	-5.24470	.00000	5.79960	-4.97500	.06020	.01070	.00570
12.697	46.160	.60010	-3.22910	1.51770	-5.24610	.00000	5.78840	-4.97470	.06120	.01060	.00490
12.700	60.200	.59940	-4.20270	1.52760	-5.24940	.00000	5.78270	-4.98230	.06270	.01060	.00430
	GRADIENT	.00000	.00000	.00000	.00000	.00000	.00000	.00000	.00000	.00000	.00000

CA20 747/1 01 S1 AT38 AT39 ORBITER DATA (CGN045) (20 JAN 75)

REFERENCE DATA

SREF = 2690.0000 SQ.FT. XMRP = 1109.0000 IN.XO
LREF = 474.8100 IN. YMRP = .0000 IN.YO
BREF = 936.6800 IN. ZMRP = 375.0000 IN.ZO
SCALE = .0300

PARAMETRIC DATA

ALPHAC = .000 BETAC = .000
ELV-IB = .000 ELV-OB = 3.000
ELEVON = 5.000 MACH = .600
BETAO = .000 PHI = .000
DX = .000 DY = .000

RUN NO. 627/ 0 RN/L = 3.23 GRADIENT INTERVAL = -1.00/ 4.00

ALPHAO	DZ	MACH	DX	DY	BETAO	PHI	ALPHAW	BETA	CY	CLN	CSL
8.542	.714	.59990	3.63520	-.02480	.01080	.00000	2.00160	.04680	-.00220	-.00020	-.00290
8.528	3.692	.59920	3.63100	-.02090	.00950	.00000	2.00010	.05430	-.00120	-.00060	-.00270
8.518	8.066	.59980	3.63410	-.01440	.00730	.00000	1.99340	.04570	-.00040	-.00060	-.00240
8.507	15.605	.59930	3.63780	-.01330	.00490	.00000	1.98550	.05310	-.00020	-.00040	-.00220
8.501	30.694	.59970	3.64610	-.00330	-.00020	.00000	1.97170	.04490	.00080	-.00010	-.00280
8.499	36.458	.60080	3.64900	-.00250	-.00040	.00000	1.96870	.04470	.00100	-.00010	-.00210
	GRADIENT	-.00024	-.00141	.00131	-.00044	.00000	-.00058	.00252	.00034	-.00013	.00007

CA20 747/1 01 S1 AT38 AT39 ORBITER DATA (CGN046) (20 JAN 75)

REFERENCE DATA

SREF =	2690.0000 SQ.FT.	XMRP =	1109.0000 IN.XO
LREF =	474.8100 IN.	YMRP =	.0000 IN.YO
BREF =	936.6800 IN.	ZMRP =	375.0000 IN.ZO
SCALE =	.0300		

PARAMETRIC DATA

ALPHAC =	4.000	BETAC =	.000
ELV-IB =	.000	ELV-OB =	3.000
ELEVON =	5.000	MACH =	.600
BETAO =	.000	PHI =	.000
DX =	.000	DY =	.000

RUN NO. 625/ 0 RN/L = 3.33 GRADIENT INTERVAL = -1.00/ 4.00

ALPHAO	DZ	MACH	DX	DY	BETAO	PHI	ALPHAW	BETA	CY	CLN	CSL
12.932	1.832	.60070	-.18360	-.02470	.00710	.00000	5.90310	.05470	-.00260	.00080	-.00270
12.928	4.902	.60050	-.39970	-.02410	.00510	.00000	5.89570	.05970	-.00210	.00080	-.00260
12.919	9.333	.59970	-.70459	-.01890	.00490	.00000	5.89180	.04620	-.00200	.00080	-.00240
12.922	16.287	.60010	-1.18040	-.01810	.00320	.00000	5.89020	.05340	-.00170	.00090	-.00210
12.928	31.736	.59970	-2.24670	-.00760	-.00230	.00000	5.89570	.04510	-.00070	.00130	-.00230
12.931	46.526	.60010	-3.26590	-.00890	-.00240	.00000	5.89220	.05070	-.00020	.00110	-.00250
12.939	61.653	.59990	-4.32120	.00250	-.00900	.00000	5.89840	.05300	.00090	.00170	-.00250
	GRADIENT	.00000	.00000	.00000	.00000	.00000	.00000	.00000	.00000	.00000	.00000

CA20 747/1 01 S1 AT38 AT39 ORBITER DATA (CGN047) (20 JAN 75)

REFERENCE DATA

SREF =	2690.0000 SQ.FT.	XMRP =	1109.0000 IN.XO
LREF =	474.8100 IN.	YMRP =	.0000 IN.YO
BREF =	936.6800 IN.	ZMRP =	375.0000 IN.ZO
SCALE =	.0300		

PARAMETRIC DATA

ALPHAC =	8.000	BETAC =	.000
ELV-IB =	.000	ELV-OB =	3.000
ELEVON =	5.000	MACH =	.600
BETAO =	.000	PHI =	.000
DX =	.000	DY =	.000

RUN NO. 626/ 0 RN/L = 3.25 GRADIENT INTERVAL = -1.00/ 4.00

ALPHAO	DZ	MACH	DX	DY	BETAO	PHI	ALPHAW	BETA	CY	CLN	CSL
16.841	.924	.60020	-2.09540	-.01670	.00380	.00000	9.78520	.04000	-.00200	.00110	-.00220
16.843	3.722	.60080	-2.48890	-.01030	.00240	.00000	9.78090	.03220	-.00120	.00080	-.00210
16.845	8.201	.60030	-3.10370	-.00870	.00200	.00000	9.77510	.04060	-.00050	.00070	-.00250
16.850	15.692	.59940	-4.13510	-.00210	-.00030	.00000	9.76470	.04690	.00100	.00040	-.00290
16.865	30.700	.59980	-6.20980	.00960	-.00430	.00000	9.74940	.04650	.00300	.00010	-.00340
16.875	45.718	.59990	-8.29310	.01440	-.00560	.00000	9.73700	.04670	.00380	.00000	-.00350
16.891	61.155	.59980	-10.44360	.02570	-.01250	.00000	9.72920	.05480	.00560	.00020	-.00360
16.891	67.897	.59990	-11.37640	.03360	-.01550	.00000	9.72220	.04720	.00650	.00030	-.00370
16.891	75.245	.60070	-12.40620	.03680	-.01600	.00000	9.72200	.04730	.00710	.00010	-.00400
	GRADIENT	.00021	-.14064	.00229	-.00050	.00000	-.00154	-.00279	.00029	-.00011	.00004

CA20 747/1 01 SI AT38 AT39 ORBITER DATA (CGN048) (20 JAN 75)

REFERENCE DATA

SREF = 2690.0000 SQ.FT. XMRP = 1109.0000 IN.XO
LREF = 474.8100 IN. YMRP = .0000 IN.YO
BREF = 936.6900 IN. ZMRP = 375.0000 IN.ZO
SCALE = .0300

PARAMETRIC DATA

ALPHAC = 4.000 BETAC = -5.000
ELV-IB = .000 ELV-OB = 3.000
ELEVON = 5.000 MACH = .600
BETAO = -5.000 PHI = .000
DX = .000 DY = .000

RUN NO. 624/ 0 RN/L = 3.34 GRADIENT INTERVAL = -1.00/ 4.00

ALPHAO	DZ	MACH	DX	DY	BETAO	PHI	ALPHAW	BETA	CY	CLN	CSL
12.701	.950	.60050	-.09170	1.42280	-5.22730	.00000	5.89270	-4.97770	.04260	.01580	.01220
12.684	4.036	.60000	-.31050	1.41650	-5.23070	.00000	5.88430	-4.97960	.04030	.01810	.01040
12.674	8.306	.59970	-.60550	1.43390	-5.23560	.00000	5.88040	-4.97320	.04380	.01750	.00840
12.674	15.805	.59980	-1.11840	1.46120	-5.24530	.00000	5.86640	-4.98130	.04790	.01740	.00660
12.679	30.896	.59900	-2.16020	1.48350	-5.25590	.00000	5.85530	-4.98770	.05190	.01740	.00520
12.680	45.974	.59940	-3.19910	1.49390	-5.25890	.00000	5.84400	-4.97330	.05320	.01740	.00410
12.692	60.286	.60090	-4.18950	1.50010	-5.26240	.00000	5.83610	-4.97300	.05380	.01770	.00360
	GRADIENT	.00000	.00000	.00000	.00000	.00000	.00000	.00000	.00000	.00000	.00000

CA20 747/1 01 SI ORBITER DATA (CGN049) (29 AUG 75)

REFERENCE DATA

SREF = 2690.0000 SQ.FT. XMRP = 1109.0000 IN.XO
LREF = 474.8100 IN. YMRP = .0000 IN.YO
BREF = 936.6900 IN. ZMRP = 375.0000 IN.ZO
SCALE = .0300

PARAMETRIC DATA

ALPHAC = .000 BETAC = .000
ELV-IB = .000 ELV-OB = 3.000
ELEVON = 5.000 MACH = .600
BETAO = .000 PHI = .000
DX = .000 DY = .000

RUN NO. 631/ 0 RN/L = 3.24 GRADIENT INTERVAL = -1.00/ 4.00

ALPHAO	DZ	MACH	DX	DY	BETAO	PHI	ALPHAW	BETA	CY	CLN	CSL
6.312	-1.419	.59920	5.29790	-.02660	.01260	.00000	1.98210	.05430	-.00170	-.00090	-.00260
6.292	1.466	.59920	5.30150	-.02450	.01180	.00000	1.98020	.06190	-.00090	-.00120	-.00230
6.279	6.074	.59910	5.30320	-.01630	.00880	.00000	1.97970	.04600	-.00050	-.00100	-.00220
6.271	13.645	.59920	5.30920	-.01460	.00610	.00000	1.97080	.05290	-.00010	-.00070	-.00210
6.270	16.398	.59950	5.30430	-.01130	.00540	.00000	1.97780	.04510	.00010	-.00080	-.00200
6.269	23.904	.60010	5.31460	-.00590	.00200	.00000	1.96400	.04490	.00080	-.00050	-.00180
	GRADIENT	.00000	.00000	.00000	.00000	.00000	.00000	.00000	.00000	.00000	.00000

CA20 747/1 01 S1 ORBITER DATA (CON043 (28 AUG 75)

REFERENCE DATA

SREF = 2690.0000 SQ.FT. XMRP = 1109.0000 IN.XO
LREF = 474.8100 IN. YMRP = .0000 IN.YO
BREF = 936.6800 IN. ZMRP = 375.0000 IN.ZO
SCALE = .0300

PARAMETRIC DATA

ALPHAC =	.000	BETAC =	.000
ELV-IB =	.000	ELV-OB =	3.000
ELEVON =	5.000	MACH =	.600
BETAO =	.000	PHI =	.000
DX =	.000	DY =	.000

RUN NO. 628/ 0 RN/L = 3.29 GRADIENT INTERVAL = -1.00/ 4.00

ALPHAO	DZ	MACH	DX	DY	BETAO	PHI	ALPHAH	BETA	CY	CLN	CSL
10.637	1.272	.59950	2.52450	-.01930	.00730	.00000	2.01030	.04640	-.00170	.00010	-.00250
10.614	3.983	.59910	2.52480	-.01980	.00740	.00000	2.00740	.05410	-.00140	-.00010	-.00230
10.601	6.941	.59970	2.52550	-.01370	.00630	.00000	2.00440	.03840	-.00100	-.00010	-.00220
10.592	9.629	.59960	2.52630	-.01580	.00590	.00000	2.00010	.04560	-.00110	.00000	-.00210
10.583	15.154	.60070	2.52980	-.01470	.00410	.00000	1.99100	.05300	-.00080	.00010	-.00190
10.565	20.699	.60030	2.53050	-.01350	.00330	.00000	1.97990	.05250	-.00070	.00010	-.00180
10.582	28.325	.60090	2.53340	-.00870	.00030	.00000	1.97440	.04490	.00000	.00030	-.00170
10.558	31.699	.59990	2.53780	-.00630	-.00040	.00000	1.97230	.05230	.00040	.00020	-.00180
10.550	37.416	.59910	2.53880	-.00650	.00000	.00000	1.96870	.05230	.00040	.00010	-.00200
10.591	42.935	.60070	2.54520	-.00450	-.00060	.00000	1.96310	.05230	.00070	.00010	-.00210
10.556	48.065	.59910	2.53990	-.00120	-.00220	.00000	1.96090	.04440	.00080	.00030	-.00210
	GRADIENT	-.00015	.00011	-.00018	.00004	.00000	-.00107	.00284	.00011	-.00007	.00007

RUN NO. 630/ 0 RN/L = 3.25 GRADIENT INTERVAL = -1.00/ 4.00

ALPHAO	DZ	MACH	DX	DY	BETAO	PHI	ALPHAH	BETA	CY	CLN	CSL
14.838	3.701	.59910	1.51970	.00250	.00170	.00000	2.03660	.03910	.00190	-.00040	-.00350
14.820	6.608	.59920	1.51440	.00350	.00140	.00000	2.03470	.04660	.00250	-.00060	-.00360
14.798	11.386	.60080	1.51090	.00280	.00070	.00000	2.02900	.05400	.00350	-.00060	-.00350
14.777	18.752	.59910	1.50530	.00610	-.00130	.00000	2.01470	.04590	.00260	-.00030	-.00340
14.759	33.074	.59940	1.50510	.01100	-.00330	.00000	1.99360	.04490	.00330	-.00040	-.00330
14.751	48.459	.60030	1.51130	.01550	-.00540	.00000	1.97740	.04440	.00380	-.00010	-.00320
14.740	63.690	.60090	1.51010	.02740	-.01460	.00000	1.97150	.04430	.00510	.00050	-.00290
	GRADIENT	.00000	.00000	.00000	.00000	.00000	.00000	.00000	.00000	.00000	.00000

ORIGINAL PAGE IS
OF POOR QUALITY

CA20 7471 01 81 ORBITER DATA (CON0501 (29 AUG 75)

REFERENCE DATA

SREF = 2690.0000 SQ.FT. XMRP = 1109.0000 IN.XO
LREF = 474.8100 IN. YMRP = .0000 IN.YO
BREF = 936.6800 IN. ZMRP = 375.0000 IN.ZO
SCALE = .0300

PARAMETRIC DATA

ALPHAC = .000 BETAC = .000
ELV-1B = .000 ELV-0B = 3.000
ELEVON = 5.000 MACH = .600
BETAO = .000 PHI = .000
DX = 10.000 DY = .000

RUN NO. 636/ 0 RN/L = 3.25 GRADIENT INTERVAL = -1.00/ 4.00

ALPHAO	DZ	MACH	DX	DY	BETAO	PHI	ALPHAW	BETA	CY	CLN	CSL
6.250	.172	.60020	15.27190	-.03320	.01450	.00000	1.97000	.05470	-.00200	-.00130	-.00230
6.243	3.541	.59960	15.27150	-.02910	.01190	.00000	1.97180	.05450	-.00150	-.00110	-.00220
6.236	7.711	.59990	15.27720	-.02610	.01060	.00000	1.96950	.05360	-.00090	-.00120	-.00210
6.238	15.213	.60070	15.28380	-.02330	.00880	.00000	1.96200	.05350	-.00050	-.00110	-.00200
6.237	18.581	.59920	15.28410	-.02260	.00730	.00000	1.96290	.05310	-.00060	-.00080	-.00190
6.238	24.078	.59920	15.28710	-.02100	.00520	.00000	1.96020	.05300	-.00050	-.00050	-.00180
	GRADIENT	-.00018	-.00012	.00122	-.00077	.00000	.00053	-.00006	.00015	.00006	.00003

RUN NO. 637/ 0 RN/L = 3.24 GRADIENT INTERVAL = -1.00/ 4.00

ALPHAO	DZ	MACH	DX	DY	BETAO	PHI	ALPHAW	BETA	CY	CLN	CSL
10.523	2.219	.59910	12.46630	-.02510	.00710	.00000	1.99630	.05490	-.00160	.00000	-.00250
10.508	5.391	.59950	12.46980	-.01920	.00660	.00000	1.99520	.04680	-.00100	-.00020	-.00240
10.498	9.749	.60000	12.47340	-.01890	.00600	.00000	1.99040	.04620	-.00100	-.00020	-.00220
10.491	17.197	.59960	12.47830	-.01460	.00350	.00000	1.98140	.04560	-.00030	-.00010	-.00200
10.487	32.470	.59980	12.48740	-.01260	.00010	.00000	1.96940	.05270	.00030	.00020	-.00190
10.486	39.016	.60020	12.49080	-.01300	.00080	.00000	1.96590	.05250	.00040	.00010	-.00200
10.484	47.260	.59980	12.49400	-.00650	-.00130	.00000	1.96280	.04470	.00090	.00020	-.00220
	GRADIENT	.00000	.00000	.00000	.00000	.00000	.00000	.00000	.00000	.00000	.00000

RUN NO. 638/ 0 RN/L = 3.23 GRADIENT INTERVAL = -1.00/ 4.00

ALPHAO	DZ	MACH	DX	DY	BETAO	PHI	ALPHAW	BETA	CY	CLN	CSL
14.710	4.989	.60030	11.34780	-.00530	.00200	.00000	2.02580	.04720	.00160	-.00040	-.00300
14.694	8.249	.59990	11.34880	-.00530	.00170	.00000	2.02180	.04740	.00150	-.00040	-.00290
14.680	12.695	.60070	11.35090	-.00840	.00150	.00000	2.01540	.05400	.00140	-.00030	-.00270
14.671	20.170	.60000	11.35310	-.00460	-.00080	.00000	2.00340	.05400	.00200	-.00020	-.00260
14.656	35.008	.59900	11.36060	-.00440	-.00170	.00000	1.98500	.05070	.00260	-.00030	-.00280
14.656	50.142	.59990	11.36550	.00210	-.00530	.00000	1.97450	.05240	.00290	.00020	-.00270
14.648	64.911	.60050	11.37090	.01860	-.01370	.00000	1.96780	.04470	.00490	.00070	-.00270
	GRADIENT	.00000	.00000	.00000	.00000	.00000	.00000	.00000	.00000	.00000	.00000

CA20 747/1 01 SI ORBITER DATA (CON051) (29 AUG 75)

REFERENCE DATA

SREF =	2690.0000 SQ.FT.	XMRP =	1109.0000 IN.XO
LREF =	474.8100 IN.	YMRP =	.0000 IN.YO
BREF =	936.6800 IN.	ZMRP =	375.0000 IN.ZO
SCALE =	.0300		

PARAMETRIC DATA

ALPHAC =	.000	BETAC =	.000
ELV-IB =	.000	ELV-OB =	3.000
ELEVON =	5.000	MACH =	.600
BETAO =	.000	PHI =	.000
DX =	20.000	DY =	.000

RUN NO. 641/ 0 RN/L = 3.24 GRADIENT INTERVAL = -1.00/ 4.00

ALPHAO	DZ	MACH	DX	DY	BETAO	PHI	ALPHAW	BETA	CY	CLN	CSL
6.190	8.425	.59990	25.24210	-.02560	.00940	.00000	1.96160	.05350	-.00040	-.00130	-.00200
6.192	11.568	.59910	25.24410	-.02540	.00980	.00000	1.96010	.05370	-.00040	-.00120	-.00200
6.193	16.022	.60000	25.25100	-.02440	.00710	.00000	1.95580	.05350	-.00030	-.00100	-.00190
6.197	23.551	.59930	25.25360	-.02090	.00460	.00000	1.95590	.05310	.00030	-.00080	-.00190
	GRADIENT	.00000	.00000	.00000	.00000	.00000	.00000	.00000	.00000	.00000	.00000

RUN NO. 640/ 0 RN/L = 3.25 GRADIENT INTERVAL = -1.00/ 4.00

ALPHAO	DZ	MACH	DX	DY	BETAO	PHI	ALPHAW	BETA	CY	CLN	CSL
10.406	10.347	.59940	22.40700	-.01410	.00510	.00000	1.98200	.03050	-.00040	-.00040	-.00230
10.407	13.221	.60000	22.41020	-.02080	.00430	.00000	1.97910	.05390	.00000	-.00040	-.00220
10.409	17.530	.59950	22.41390	-.01610	.00310	.00000	1.97280	.04580	.00000	-.00020	-.00210
10.410	25.437	.59920	22.42090	-.02000	.00140	.00000	1.96540	.05280	.00000	.00010	-.00190
10.413	40.457	.59950	22.43270	-.00750	.00010	.00000	1.95590	.03700	.00000	.00000	-.00220
10.411	46.554	.59940	22.43050	-.01450	-.00050	.00000	1.95860	.05260	.00110	.00000	-.00230
	GRADIENT	.00000	.00000	.00000	.00000	.00000	.00000	.00000	.00000	.00000	.00000

RUN NO. 639/ 0 RN/L = 3.30 GRADIENT INTERVAL = -1.00/ 4.00

ALPHAO	DZ	MACH	DX	DY	BETAO	PHI	ALPHAW	BETA	CY	CLN	CSL
14.618	13.230	.59990	21.18160	-.01070	.00160	.00000	1.99590	.04660	.00100	-.00010	-.00250
14.617	16.279	.60030	21.18350	-.00400	.00160	.00000	1.99560	.03880	.00160	-.00030	-.00270
14.616	20.672	.60080	21.18810	-.00640	.00000	.00000	1.99830	.04630	.00190	-.00020	-.00260
14.614	28.161	.60050	21.19310	-.00210	-.00190	.00000	1.98890	.04560	.00270	-.00020	-.00280
14.610	43.380	.60080	21.20220	-.00190	-.00220	.00000	1.97060	.04490	.00270	-.00010	-.00290
14.607	69.256	.60000	21.20560	.00290	-.00690	.00000	1.96520	.04470	.00360	.00030	-.00260
14.604	69.990	.60040	21.21280	.01290	-.01260	.00000	1.96040	.04450	.00550	.00060	-.00290
	GRADIENT	.00000	.00000	.00000	.00000	.00000	.00000	.00000	.00000	.00000	.00000

CA20 747/1 01 S1 ORBITER DATA (CGN0521) (20 JAN 75)

REFERENCE DATA

SREF =	2690.0000 SQ.FT.	XMRP =	1109.0000 IN.XO
LREF =	474.8100 IN.	YMRP =	.0000 IN.YO
BREF =	936.6800 IN.	ZMRP =	375.0000 IN.ZO
SCALE =	.0300		

PARAMETRIC DATA

ALPHAC =	4.000	BETAC =	.000
ELV-IB =	.000	ELV-OB =	3.000
ELEVON =	5.000	MACH =	.600
BETAO =	.000	PHI =	.000
DX =	.000	DY =	.000

RUN NO. 632/ 0 RN/L = 3.24 GRADIENT INTERVAL = -1.00/ 4.00

ALPHAO	DZ	MACH	DX	DY	BETAO	PHI	ALPHAH	BETA	CY	CLN	CSL
6.161	-3.400	.60080	3.77560	-.02220	.01160	.00000	5.84160	.05500	-.00080	-.00120	-.00290
6.159	-.517	.60060	3.57990	-.01780	.01220	.00000	5.84240	.04650	-.00020	-.00170	-.00240
6.166	3.831	.60030	3.28090	-.01630	.01030	.00000	5.83870	.04590	-.00020	-.00140	-.00220
6.178	11.707	.59960	2.74170	-.01420	.00790	.00000	5.83720	.05280	.00040	-.00130	-.00210
6.203	24.148	.59980	1.88550	-.00670	.00240	.00000	5.83190	.04470	.00070	-.00060	-.00180
	GRADIENT	-.00007	-.06877	.00034	-.00044	.00000	-.00085	-.00014	.00000	.00007	.00005

RUN NO. 646/ 0 RN/L = 3.24 GRADIENT INTERVAL = -1.00/ 4.00

ALPHAO	DZ	MACH	DX	DY	BETAO	PHI	ALPHAH	BETA	CY	CLN	CSL
10.487	1.956	.59980	.61590	-.01230	.00670	.00000	5.86740	.03910	-.00050	-.00030	-.00290
10.482	6.349	.60050	.31720	-.01200	.00600	.00000	5.86210	.04610	-.00020	-.00040	-.00270
10.488	13.746	.59930	-.18850	-.00960	.00400	.00000	5.85350	.04550	.00000	-.00020	-.00240
10.493	29.253	.59900	-1.25310	-.00390	-.00130	.00000	5.84130	.05260	.00080	.00020	-.00210
10.497	34.861	.59990	-1.63870	-.00460	-.00050	.00000	5.83910	.05250	.00080	.00010	-.00220
10.501	44.044	.60010	-2.27250	-.00250	-.00050	.00000	5.83380	.04480	.00090	.00000	-.00230
	GRADIENT	.00000	.00000	.00000	.00000	.00000	.00000	.00000	.00000	.00000	.00000

RUN NO. 647/ 0 RN/L = 3.24 GRADIENT INTERVAL = -1.00/ 4.00

ALPHAO	DZ	MACH	DX	DY	BETAO	PHI	ALPHAH	BETA	CY	CLN	CSL
14.823	.973	.60090	-.34980	-.00900	.00130	.00000	5.90030	.03900	-.00080	.00070	-.00210
14.798	3.966	.59980	-.55880	-.00710	.00180	.00000	5.89710	.03820	-.00020	.00030	-.00180
14.785	8.718	.60050	-.88540	-.00540	.00080	.00000	5.89000	.04570	.00040	.00020	-.00200
14.777	16.065	.60050	-1.39120	-.00360	-.00020	.00000	5.87650	.05360	.00100	.00010	-.00220
14.774	31.103	.60080	-2.42410	.00730	-.00380	.00000	5.85800	.04480	.00250	.00000	-.00250
14.771	45.934	.59920	-3.45290	.00920	-.00550	.00000	5.84860	.05240	.00300	.00000	-.00270
14.768	60.784	.59920	-4.47470	.02360	-.01350	.00000	5.83630	.04490	.00450	.00060	-.00270
	GRADIENT	-.00037	-.06982	.00063	.00017	.00000	-.00107	-.00027	.00020	-.00013	.00010

CA20 747/1 01 SI ORBITER DATA (CGH053) (20 JAN 75)

REFERENCE DATA

SREF = 2690.0000 SQ.FT. XMRP = 1109.0000 IN.XO
LREF = 474.8100 IN. YMRP = .0000 IN.YO
BREF = 935.6800 IN. ZMRP = 375.0000 IN.ZO
SCALE = .0380

PARAMETRIC DATA

ALPHAC =	4.000	BETAC =	.000
ELV-IB =	.000	ELV-OB =	3.000
ELEVON =	5.000	MACH =	.600
BETAO =	.000	PHI =	.000
DX =	10.000	DY =	.000

RUN NO. 635/ 0 RN/L = 3.27 GRADIENT INTERVAL = -1.00/ 4.00

ALPHAO	DZ	MACH	DX	DY	BETAO	PHI	ALPHAW	BETA	CY	CLN	CSL
6.127	-3.556	.60030	13.78940	-.02950	.01620	.00000	5.83520	.04740	-.00160	-.00180	-.00270
6.127	-.555	.60070	13.59720	-.03250	.01490	.00000	5.83590	.05250	-.00090	-.00190	-.00230
6.134	3.735	.60070	13.29050	-.03270	.01370	.00000	5.83540	.05170	-.00110	-.00160	-.00210
6.151	11.277	.60010	12.77230	-.02220	.01110	.00000	5.83280	.04570	-.00050	-.00140	-.00210
6.169	17.789	.60020	12.32180	-.01940	.00890	.00000	5.83040	.04560	-.00030	-.00120	-.00190
	GRADIENT	-.00000	-.05850	-.00005	-.00028	.00000	-.00012	-.00018	-.00005	.00007	.00005

RUN NO. 694/ 0 RN/L = 3.23 GRADIENT INTERVAL = -1.00/ 4.00

ALPHAO	DZ	MACH	DX	DY	BETAO	PHI	ALPHAW	BETA	CY	CLN	CSL
10.448	-1.201	.60020	10.79470	-.01680	.01530	.00000	5.84020	.00060	-.00340	-.00050	-.00290
10.431	1.842	.60020	10.59270	-.01490	.01460	.00000	5.84070	-.00010	-.00310	-.00060	-.00260
10.432	6.409	.60030	10.22290	-.00950	.01300	.00000	5.83720	-.00860	-.00280	-.00050	-.00240
10.436	13.966	.59990	9.77130	-.01640	.01100	.00000	5.83810	-.00150	-.00260	-.00030	-.00210
10.455	28.936	.60060	8.74770	-.00770	.00610	.00000	5.82040	.00580	-.00190	.00020	-.00170
10.476	43.699	.60000	7.70840	-.00180	.00500	.00000	5.81390	-.00170	-.00140	.00020	-.00190
10.477	48.276	.60010	7.41470	-.00160	.00420	.00000	5.81240	-.00180	-.00150	.00040	-.00190
	GRADIENT	.00000	.00000	.00000	.00000	.00000	00000	.00000	.00000	.00000	.00000

RUN NO. 693/ 0 RN/L = 3.23 GRADIENT INTERVAL = -1.00/ 4.00

ALPHAO	DZ	MACH	DX	DY	BETAO	PHI	ALPHAW	BETA	CY	CLN	CSL
14.751	1.086	.60030	9.51270	-.01800	.00830	.00000	5.86830	-.00710	-.00540	.00140	-.00050
14.731	4.167	.59960	9.30440	-.01580	.00800	.00000	5.86720	-.00830	-.00490	.00110	-.00010
14.724	8.638	.60010	9.00320	-.01780	.00750	.00000	5.85940	-.00890	-.00480	.00100	.00040
14.722	16.335	.60040	8.47860	-.01790	.00660	.00000	5.85020	.00610	-.00420	.00080	.00050
14.722	31.320	.59960	7.45320	-.00050	.00300	.00000	5.83490	-.00200	-.00130	.00040	-.00120
14.727	46.516	.60010	6.40990	-.00130	.00270	.00000	5.82450	.00580	-.00080	.00040	-.00160
14.727	61.207	.59940	5.39790	.01430	-.00580	.00000	5.81820	-.00200	.00090	.00110	-.00180
	GRADIENT	.00000	.00000	.00000	.00000	.00000	.00000	.00000	.00000	.00000	.00000

CA20 747/1 01 SI ORBITER DATA (CGN054) (20 JAN 75)

REFERENCE DATA

SREF = 2690.0000 SQ.FT. XMRP = 1109.0000 IN.XO
LREF = 474.8100 IN. YMRP = .0000 IN.YO
BREF = 936.6800 IN. ZMRP = 375.0000 IN.ZO
SCALE = .0300

PARAMETRIC DATA

ALPHAC = 4.000 BETAC = .000
ELV-IB = .000 ELV-OB = 3.000
ELEVON = 5.000 MACH = .600
BETAO = .000 PHI = .000
DX = 20.000 DY = .000

RUN NO. 642/ 0 RN/L = 3.22 GRADIENT INTERVAL = -1.00/ 4.00

ALPHAO	DZ	MACH	DX	DY	BETAO	PHI	ALPHAW	BETA	CY	CLN	CSL
6.093	2.348	.59910	23.37960	-.02250	.01360	.00000	5.83400	.04650	-.00050	-.00200	-.00220
6.103	5.577	.59930	23.15610	-.02620	.01220	.00000	5.83120	.05400	-.00030	-.00190	-.00210
6.111	9.879	.59920	22.86210	-.02590	.01070	.00000	5.83040	.05370	-.00040	-.00160	-.00200
6.132	17.481	.59960	22.33520	-.01930	.00820	.00000	5.82870	.04560	-.00010	-.00120	-.00200
6.145	25.860	.59990	21.75890	-.02230	.00550	.00000	5.82680	.05300	.00020	-.00090	-.00180
	GRADIENT	.00000	.00000	.00000	.00000	.00000	.00000	.00000	.00000	.00000	.00000

RUN NO. 677/ 0 RN/L = 3.28 GRADIENT INTERVAL = -1.00/ 4.00

ALPHAO	DZ	MACH	DX	DY	BETAO	PHI	ALPHAW	BETA	CY	CLN	CSL
10.302	4.428	.59980	20.39070	.00180	.01220	.00000	5.85300	-.00890	-.00230	-.00070	-.00250
10.309	7.499	.60020	20.18050	.00640	.01130	.00000	5.84870	-.01700	-.00230	-.00060	-.00240
10.316	11.949	.59990	19.87580	.01160	.01040	.00000	5.84580	-.02500	-.00220	-.00050	-.00220
10.336	19.513	.59990	19.35470	.00820	.00760	.00000	5.83900	-.01750	-.00210	-.00010	-.00200
10.357	34.554	.60000	18.31350	.00950	.00490	.00000	5.83680	-.00990	-.00100	-.00010	-.00200
10.367	48.107	.60030	17.37700	.01200	.00310	.00000	5.83240	-.00970	-.00060	.00010	-.00220
	GRADIENT	.00000	.00000	.00000	.00000	.00000	.00000	.00000	.00000	.00000	.00000

RUN NO. 676/ 0 RN/L = 3.27 GRADIENT INTERVAL = -1.00/ 4.00

ALPHAO	DZ	MACH	DX	DY	BETAO	PHI	ALPHAW	BETA	CY	CLN	CSL
14.565	7.759	.59950	18.91230	-.00490	.00530	.00000	5.87200	-.00890	-.00410	.00120	-.00140
14.565	10.920	.60050	18.69760	-.00170	.00500	.00000	5.87010	-.01700	-.00430	.00120	-.00070
14.575	15.111	.59950	18.40910	-.01090	.00430	.00000	5.86550	-.00210	-.00450	.00130	.00000
14.571	22.922	.60080	17.87690	.00060	.00150	.00000	5.85910	-.01770	-.00400	.00130	.00090
14.590	37.645	.59910	16.86160	.00120	.00210	.00000	5.84840	-.01000	-.00290	.00080	.00060
14.589	52.832	.59920	15.81080	.01610	-.00130	.00000	5.84130	-.01000	.00020	.00060	-.00160
14.705	68.281	.60040	14.72650	.03240	-.00970	.00000	5.83540	-.01740	.00240	.00120	-.00180
	GRADIENT	.00000	.00000	.00000	.00000	.00000	.00000	.00000	.00000	.00000	.00000

CAEO 747/1 01 S1 ORBITER DATA (CONV55) (20 JAN 75)

REFERENCE DATA

SREF = 2693.0000 SQ.FT. XMRP = 1109.0000 IN.XO
LREF = 474.8100 IN. YMRP = .0000 IN.YO
BREF = 938.6800 IN. ZMRP = 375.0000 IN.ZO
SCALE = .0300

PARAMETRIC DATA

ALPHAC = 8.000 BETAC = .000
ELV-IB = .000 ELV-OB = 3.000
ELEVON = 5.000 MACH = .600
BETAO = .000 PHI = .000
DX = .000 DY = .000

RUN NO. 633/ 0 RN/L = 3.23 GRADIENT INTERVAL = -1.00/ 4.00

ALPHAO	DZ	MACH	DX	DY	BETAO	PHI	ALPHAW	BETA	CY	CLN	CSL
5.939	-.997	.59920	1.93130	-.01440	.01090	.00000	9.71490	.04850	.00050	-.00180	-.00280
5.987	1.851	.59980	1.54240	-.01510	.00980	.00000	9.71670	.05580	.00060	-.00170	-.00250
6.027	6.647	.60070	.87960	-.01400	.00900	.00000	9.71750	.04770	.00020	-.00140	-.00230
6.074	14.133	.59940	-.15900	-.01320	.00770	.00000	9.71500	.05480	.00070	-.00140	-.00220
6.098	18.812	.60020	-.60660	-.01220	.00620	.00000	9.71600	.05470	.00070	-.00120	-.00200
6.122	24.109	.60050	-1.54470	-.00780	.00320	.00000	9.71780	.04700	.00060	-.00070	-.00190
	GRADIENT	.00011	-.13704	-.00025	-.00039	.00000	.00063	.00257	.00004	.00004	.00011

RUN NO. 645/ 0 RN/L = 3.25 GRADIENT INTERVAL = -1.00/ 4.00

ALPHAO	DZ	MACH	DX	DY	BETAO	PHI	ALPHAW	BETA	CY	CLN	CSL
10.289	-2.897	.59940	-.65080	-.01520	.00760	.00000	9.73420	.05720	-.00010	-.00040	-.00450
10.303	.265	.60020	-1.07800	-.01080	.00800	.00000	9.73240	.04110	.00010	-.00070	-.00370
10.323	4.651	.60030	-1.67400	-.01440	.00810	.00000	9.73030	.04770	-.00030	-.00060	-.00330
10.355	12.183	.60030	-2.70650	-.01300	.00630	.00000	9.72660	.04680	-.00030	-.00040	-.00290
10.431	27.416	.60060	-4.81680	-.00870	.00170	.00000	9.71950	.05430	.00030	.00000	-.00230
10.459	42.296	.60050	-6.88330	-.00430	.00010	.00000	9.71470	.05450	.00110	-.00010	-.00260
10.484	47.714	.59970	-7.63700	-.00290	-.00120	.00000	9.71360	.05430	.00128	.00000	-.00250
	GRADIENT	.00000	.00000	.00000	.00000	.00000	.00000	.00000	.00000	.00000	.00000

RUN NO. 644/ 0 RN/L = 3.28 GRADIENT INTERVAL = -1.00/ 4.00

ALPHAO	DZ	MACH	DX	DY	BETAO	PHI	ALPHAW	BETA	CY	CLN	CSL
14.701	-.738	.60050	-2.01430	-.01310	.00390	.00000	9.76940	.04100	-.00120	.00090	-.00360
14.691	2.335	.60030	-2.43060	-.01170	.00370	.00000	9.76740	.03260	-.00130	.00090	-.00320
14.699	6.812	.60060	-3.04150	-.01650	.00270	.00000	9.76110	.03970	-.00220	.00140	-.00270
14.714	14.542	.59980	-4.10420	-.01810	.00100	.00000	9.75120	.04640	-.00250	.00140	-.00060
14.743	29.472	.60060	-6.16200	-.01050	-.00310	.00000	9.73740	.04580	-.00150	.00110	.00080
14.754	44.335	.60010	-8.22650	-.00360	-.00260	.00000	9.72820	.05410	.00060	.00040	-.00110
14.762	59.151	.60020	-10.28770	.01310	-.00990	.00000	9.72010	.04650	.00280	.00070	-.00190
	GRADIENT	-.00007	-.13549	.00046	-.00007	.00000	-.00065	-.00273	-.00003	.00000	.00013

CA20 747/1 01 S1 ORBITER DATA (CGN058) (20 JAN 75)

REFERENCE DATA

SREF = 2690.0000 SQ.FT. XMRP = 1109.0000 IN.XO
LREF = 474.8100 IN. YMRP = .0000 IN.YO
BREF = 936.6800 IN. ZMRP = 375.0000 IN.ZO
SCALE = .0300

PARAMETRIC DATA

ALPHAC =	3.000	BETAC =	.000
ELV-IB =	.000	ELV-OB =	3.000
ELEVON =	5.000	MACH =	.600
BETAO =	.000	PHI =	.000
DX =	10.000	DY =	.000

RUN NO. 634/ 0 RN/L = 3.30 GRADIENT INTERVAL = -1.00/ 4.00

ALPHAO	DZ	MACH	DX	DY	BETAO	PHI	ALPHAH	BETA	CY	CLN	CSL
5.917	-2.155	.59920	12.18910	-.03110	.01740	.00000	9.71230	.05720	-.00090	-.00230	-.00270
5.956	.903	.60070	11.76590	-.02850	.01660	.00000	9.71600	.04890	-.00130	-.00210	-.00240
5.994	5.537	.59940	11.12250	-.02580	.01440	.00000	9.71450	.04800	-.00090	-.00190	-.00220
6.038	12.684	.60000	10.12740	-.02420	.01290	.00000	9.71870	.04760	-.00080	-.00170	-.00210
6.070	19.121	.59950	9.23370	-.02490	.01020	.00000	9.71600	.05510	-.00050	-.00140	-.00190
6.098	25.727	.59960	8.31400	-.02300	.00700	.00000	9.71520	.05500	-.00060	-.00080	-.00190
	GRADIENT	.00000	.00000	.00000	.00000	.00000	.00000	.00000	.00000	.00000	.00000

RUN NO. 691/ 0 RN/L = 3.24 GRADIENT INTERVAL = -1.00/ 4.00

ALPHAO	DZ	MACH	DX	DY	BETAO	PHI	ALPHAH	BETA	CY	CLN	CSL
10.217	-2.770	.59940	9.39150	-.01990	.01790	.00000	9.73900	.01070	-.00300	-.00100	-.00350
10.225	.202	.60050	8.98730	-.01830	.01690	.00000	9.73760	.01010	-.00280	-.00110	-.00290
10.258	5.005	.60030	8.31960	-.01770	.01580	.00000	9.73910	.00890	-.00290	-.00090	-.00260
10.289	12.254	.60010	7.32340	-.01180	.01310	.00000	9.73430	.00070	-.00260	-.00060	-.00250
10.356	27.323	.59960	5.23270	-.01300	.00800	.00000	9.72900	.01580	-.00220	.00000	-.00200
10.401	42.555	.59930	3.10580	-.00360	.00660	.00000	9.72690	.00060	-.00160	.00000	-.00210
10.410	48.530	.60030	2.27610	-.00620	.00600	.00000	9.72320	.00840	-.00160	.00010	-.00200
	GRADIENT	.00000	.00000	.00000	.00000	.00000	.00000	.00000	.00000	.00000	.00000

RUN NO. 692/ 0 RN/L = 3.23 GRADIENT INTERVAL = -1.00/ 4.00

ALPHAO	DZ	MACH	DX	DY	BETAO	PHI	ALPHAH	BETA	CY	CLN	CSL
14.599	-.266	.59960	7.86010	-.01000	.01200	.00000	9.76440	-.00560	-.00290	.00010	-.00340
14.597	2.610	.59960	7.47010	-.01020	.01100	.00000	9.76290	-.00620	-.00310	.00030	-.00290
14.613	7.478	.60000	6.80220	-.01470	.01070	.00000	9.76070	.00080	-.00350	.00040	-.00240
14.633	14.672	.60030	5.81800	-.02120	.00930	.00000	9.75250	.00770	-.00460	.00110	-.00170
14.673	29.795	.60000	3.73130	-.01120	.00310	.00000	9.74240	-.00020	-.00390	.00150	-.00030
14.695	44.753	.59980	1.65330	-.01330	.00280	.00000	9.73500	.00790	-.00370	.00130	.00040
14.712	59.602	.60090	-.41850	-.00080	-.00380	.00000	9.72990	.00820	-.00170	.00150	.00040
	GRADIENT	-.00000	-.13563	-.00007	-.00035	.00000	-.00052	-.00021	-.00007	.00007	.00017

CA20 747/1 01 SI ORBITER DATA (CGN057) (20 JAN 75)

REFERENCE DATA

SREF = 2690.0000 SQ.FT. XMRP = 1109.0000 IN.XO
LREF = 474.8100 IN. YMRP = .0000 IN.YO
BREF = 936.6800 IN. ZMRP = 375.0000 IN.ZO
SCALE = .0300

PARAMETRIC DATA

ALPHAC =	8.000	BETAC =	.000
ELV-IB =	.000	ELV-OB =	3.000
ELEVON =	5.000	MACH =	.600
BETAO =	.000	PHI =	.000
DX =	20.000	DY =	.000

RUN NO. 643/ 0 RN/L = 3.22 GRADIENT INTERVAL = -1.00/ 4.00

ALPHAO	DZ	MACH	DX	DY	BETAO	PHI	ALPHAW	BETA	CY	CLN	CSL
5.918	-3.193	.60060	22.40390	-.02500	.01850	.00000	9.70870	.04980	-.00070	-.00280	-.00280
5.942	-.094	.60060	21.97440	-.02980	.01740	.00000	9.70850	.05590	-.00080	-.00260	-.00250
5.973	4.408	.60010	21.34670	-.02910	.01520	.00000	9.70990	.05610	-.00070	-.00220	-.00230
6.011	11.874	.60030	20.31020	-.02640	.01200	.00000	9.70990	.05540	-.00030	-.00160	-.00210
6.079	26.802	.60020	18.22690	-.01920	.00740	.00000	9.71150	.04720	.00000	-.00120	-.00180
	GRADIENT	.00000	.00000	.00000	.00000	.00000	.00000	.00000	.00000	.00000	.00000

RUN NO. 674/ 0 RN/L = 3.27 GRADIENT INTERVAL = -1.00/ 4.00

ALPHAO	DZ	MACH	DX	DY	BETAO	PHI	ALPHAW	BETA	CY	CLN	CSL
10.226	-1.405	.59980	19.22120	.00000	.01770	.00000	9.73920	-.00550	-.00230	-.00170	-.00320
10.235	1.641	.60050	18.80350	.00330	.01650	.00000	9.73750	-.01420	-.00280	-.00130	-.00270
10.253	6.023	.60050	18.19550	.00170	.01390	.00000	9.73650	-.00710	-.00230	-.00110	-.00250
10.290	13.703	.60070	17.13510	.00620	.01250	.00000	9.73300	-.01530	-.00230	-.00080	-.00240
10.351	28.615	.59970	15.05830	.00700	.00860	.00000	9.73110	-.00770	-.00150	-.00020	-.00200
10.395	43.688	.60080	12.98800	.00900	.00590	.00000	9.72550	-.00750	-.00110	-.00020	-.00210
10.403	49.633	.59980	12.11970	.00900	.00450	.00000	9.72910	-.00730	-.00120	.00010	-.00210
	GRADIENT	.00000	.00000	.00000	.00000	.00000	.00000	.00000	.00000	.00000	.00000

RUN NO. 675/ 0 RN/L = 3.27 GRADIENT INTERVAL = -1.00/ 4.00

ALPHAO	DZ	MACH	DX	DY	BETAO	PHI	ALPHAW	BETA	CY	CLN	CSL
14.444	1.517	.60060	17.56580	.01060	.01100	.00000	9.75870	-.02180	-.00220	-.00020	-.00330
14.457	4.549	.59960	17.14950	.00580	.00970	.00000	9.75720	-.01490	-.00240	.00000	-.00300
14.478	9.043	.59980	16.53140	-.00060	.00910	.00000	9.75430	-.00770	-.00290	.00030	-.00250
14.497	16.873	.60010	15.45500	.00340	.00640	.00000	9.74690	-.01590	-.00310	.00070	-.00200
14.563	31.919	.59930	13.36970	.00580	.00160	.00000	9.73960	-.01590	-.00290	.00150	-.00160
14.607	46.722	.60090	11.30630	-.00570	.00080	.00000	9.73540	-.00030	-.00360	.00160	-.00020
14.699	62.461	.59960	9.09770	.00820	-.00670	.00000	9.73250	-.00770	-.00190	.00220	.00000
	GRADIENT	.00000	.00000	.00000	.00000	.00000	.00000	.00000	.00000	.00000	.00000

ORIGINAL PAGE IS
OF POOR QUALITY

CA20 7471 01 SI ORBITER DATA (CGN058) (20 JAN 75)

REFERENCE DATA

SREF = 2690.0000 SQ.FT. XMRP = 1109.0000 IN.XO
LREF = 474.8100 IN. YMRP = .0000 IN.YO
BREF = 936.6800 IN. ZMRP = 375.0000 IN.ZO
SCALE = .0300

PARAMETRIC DATA

ALPHAC =	4.000	BETAC =	.000
ELV-IB =	.000	ELV-OB =	3.000
ELEVON =	5.000	MACH =	.600
BETAO =	.000	PHI =	.000
DX =	.000	DY =	10.000

RUN NO. 775/ 0 RN/L = 3.33 GRADIENT INTERVAL = -1.00/ 4.00

ALPHAO	DZ	MACH	DX	DY	BETAO	PHI	ALPHAW	BETA	CY	CLN	CSL
10.536	-1.419	.60030	.85680	9.98100	.02160	.00000	5.83050	.01560	-.00110	-.00120	-.01040
10.526	1.326	.60030	.67100	9.97800	.02320	.00000	5.82840	.02110	-.00110	-.00180	-.00850
10.524	5.838	.60070	.36640	9.97700	.02290	.00000	5.81890	.00970	-.00170	-.00170	-.00700
10.524	13.085	.59950	-.12830	9.97800	.01910	.00000	5.81440	.00650	-.00220	-.00110	-.00560
10.536	28.495	.60020	-1.17810	9.98970	.00690	.00000	5.80330	.01060	-.00120	.00020	-.00390
10.542	43.191	.60090	-2.18280	10.00100	-.00020	.00000	5.79600	.01030	.00020	.00050	-.00330
10.542	47.091	.60080	-2.45200	10.00520	-.00310	.00000	5.79670	.01100	.00060	.00080	-.00320
	GRADIENT	.00000	.00000	.00000	.00000	.00000	.00000	.00000	.00000	.00000	.00000

RUN NO. 781/ 0 RN/L = 3.22 GRADIENT INTERVAL = -1.00/ 4.00

ALPHAO	DZ	MACH	DX	DY	BETAO	PHI	ALPHAW	BETA	CY	CLN	CSL
14.865	1.432	.60080	-.35660	9.94370	.01800	.00000	5.86870	.02570	-.00980	.00330	-.00420
14.849	5.001	.60000	-.60690	9.94940	.02110	.00000	5.86350	.02250	-.00790	.00120	-.00230
14.843	8.890	.60050	-.87520	9.95610	.02080	.00000	5.85720	.00920	-.00680	.00060	-.00200
14.834	16.716	.60050	-1.41420	9.96810	.01550	.00000	5.84460	.01190	-.00460	.00050	-.00280
14.831	29.965	.60070	-2.32080	9.98930	.00570	.00000	5.82750	-.00030	-.00180	.00080	-.00300
14.830	31.354	.60040	-2.41560	9.98990	.00430	.00000	5.82630	.00740	-.00160	.00090	-.00300
14.828	46.543	.60000	-3.46170	10.00500	-.00210	.00000	5.81770	.00830	.00080	.00080	-.00320
14.820	61.677	.59960	-4.50100	10.02160	-.01260	.00000	5.80820	.01030	.00280	.00150	-.00300
	GRADIENT	.00000	.00000	.00000	.00000	.00000	.00000	.00000	.00000	.00000	.00000

CA20 7471 01 SI ORBITER DATA (CGH059) (20 JAN 75)

REFERENCE DATA

SREF = 2690.0000 SQ.FT. XMRP = 1109.0000 IN.XO
LREF = 474.8100 IN. YMRP = .0000 IN.YO
BREF = 935.6800 IN. ZMRP = 375.0000 IN.ZO
SCALE = .0300

PARAMETRIC DATA

ALPHAC =	4.000	BETAC =	.000
ELV-IB =	.000	ELV-OB =	3.000
ELEVON =	5.000	MACH =	.600
BETAO =	.000	PHI =	.000
DX =	10.000	DY =	10.000

RUN NO. 735/ 0 RN/L = 3.31 GRADIENT INTERVAL = -1.00/ 4.00

ALPHAO	DZ	MACH	DX	DY	BETAO	PHI	ALPHAW	BETA	CY	CLN	CSL
10.410	-2.369	.59950	10.89070	9.99070	.02220	.00000	5.86010	.00060	-.00130	-.00140	-.01070
10.404	1.142	.60030	10.65090	9.98750	.02500	.00000	5.86050	.00600	-.00090	-.00250	-.00840
10.407	5.650	.60010	10.34040	9.98660	.02370	.00000	5.85570	-.00520	-.00210	-.00190	-.00700
10.424	13.193	.60040	9.81670	9.99950	.01690	.00000	5.85130	-.00840	-.00210	-.00130	-.00560
10.437	27.955	.60000	8.80350	9.99570	.00920	.00000	5.84270	-.00450	-.00150	.00000	-.00400
10.445	42.957	.59950	7.77080	10.00860	.00120	.00000	5.83450	-.01260	-.00020	.00050	-.00330
10.450	46.957	.60000	7.49300	10.00900	-.00140	.00000	5.83280	-.00430	.00020	.00070	-.00330
	GRADIENT	.00000	.00000	.00000	.00000	.00000	.00000	.00000	.00000	.00000	.00000

RUN NO. 738/ 0 RN/L = 3.24 GRADIENT INTERVAL = -1.00/ 4.00

ALPHAO	DZ	MACH	DX	DY	BETAO	PHI	ALPHAW	BETA	CY	CLN	CSL
14.679	-.128	.60020	9.59730	9.97850	.01040	.00000	5.89440	-.00270	-.00670	.00320	-.00640
14.671	3.023	.60010	9.38060	9.97590	.01530	.00000	5.89080	-.00640	-.00650	.00150	-.00360
14.668	7.553	.60000	9.06900	9.97480	.01440	.00000	5.88650	-.00590	-.00620	.00100	-.00190
14.673	14.859	.60060	8.56540	9.98310	.01020	.00000	5.87810	-.01910	-.00560	.00110	-.00060
14.673	30.066	.60000	7.51480	10.00810	.00090	.00000	5.85360	-.02340	-.00100	.00090	-.00240
14.682	44.947	.60060	6.48600	10.02130	-.00590	.00000	5.85260	-.02250	.00120	.00120	-.00260
14.683	59.957	.60050	5.43920	10.03040	-.01380	.00000	5.85030	-.00490	.00360	.00150	-.00290
	GRADIENT	-.00003	-.00876	-.00082	.00155	.00000	-.00114	-.00117	.00006	-.00054	.00089

CA20 747/1 01 S1 ORBITER DATA (CGN060) (20 JAN 75)

REFERENCE DATA

SREF = 2690.0000 SQ.FT. XMRP = 1109.0000 IN.XO
LREF = 474.8100 IN. YMRP = .0000 IN.YO
BREF = 936.6800 IN. ZMRP = 375.0000 IN.ZO
SCALE = .0300

PARAMETRIC DATA

ALPHAC = 8.000 BETAC = .000
ELV-IB = .000 ELV-OB = 3.000
ELEVON = 5.000 MACH = .600
BETAO = .000 PHI = .000
DX = .000 DY = 10.000

RUN NO. 780/ 0 RN/L = 3.24 GRADIENT INTERVAL = -1.00/ 4.00

ALPHAO	DZ	MACH	DX	DY	BETAO	PHI	ALPHAW	BETA	CY	CLN	CSL
10.362	-1.757	.60010	-.78530	10.03920	.00620	.00000	9.67770	.00770	.00930	-.00350	-.01390
10.378	.812	.60050	-1.13020	10.01360	.01490	.00000	9.67470	.01270	.00530	-.00320	-.01200
10.393	5.122	.59910	-1.71630	9.99440	.02190	.00000	9.67280	.01040	.00210	-.00300	-.01020
10.433	12.363	.60010	-2.71010	9.97970	.02480	.00000	9.67120	.00750	-.00080	-.00230	-.00820
10.490	27.851	.59950	-4.84220	9.98430	.01500	.00000	9.66450	.00390	-.00140	-.00070	-.00560
10.511	42.980	.59990	-6.92130	9.99200	.00710	.00000	9.65560	.00540	-.00100	.00020	-.00430
10.512	46.793	.59930	-7.44810	9.99030	.00520	.00000	9.65390	.02120	-.00100	.00040	-.00400
	GRADIENT	.00000	.00000	.00000	.00000	.00000	.00000	.00000	.00000	.00000	.00000

RUN NO. 787/ 0 RN/L = 3.18 GRADIENT INTERVAL = -1.00/ 4.00

ALPHAO	DZ	MACH	DX	DY	BETAO	PHI	ALPHAW	BETA	CY	CLN	CSL
14.755	.306	.60060	-2.12040	10.00190	.00500	.00000	9.69920	.02650	.00130	.00160	-.01210
14.757	3.230	.59980	-2.51630	9.98410	.01160	.00000	9.69640	.02840	-.00120	.00110	-.00930
14.766	7.801	.60080	-3.13560	9.96970	.01720	.00000	9.69090	.02280	-.00350	.00080	-.00720
14.743	15.148	.60010	-4.13630	9.96310	.01620	.00000	9.68370	.01890	-.00520	.00120	-.00450
14.783	15.383	.60090	-4.17270	9.96030	.01690	.00000	9.68250	.01880	-.00580	.00140	-.00440
14.805	30.352	.60060	-6.21870	9.96960	.00920	.00000	9.66770	.00970	-.00540	.00160	-.00110
14.814	45.218	.60030	-8.27030	9.98620	.00220	.00000	9.66150	.01090	-.00280	.00150	-.00120
14.814	60.205	.60010	-10.34390	10.00840	-.00810	.00000	9.65530	.02060	.00090	.00160	-.00240
	GRADIENT	-.00027	-.13541	-.00609	.00226	.00000	-.00096	.00065	-.00086	-.00017	.00096

CA20 747/1 01 S1 ORBITER DATA (CGN061) (20 JAN 75)

REFERENCE DATA

SREF =	2690.0000 SQ.FT.	XMRP =	1109.0000 IN.XO		
LREF =	474.8100 IN.	YMRP =	.0000 IN.YO		
BREF =	935.6800 IN.	ZMRP =	375.0000 IN.ZO		
SCALE =	.0380				

PARAMETRIC DATA

ALPHAC =	8.000	BETAC =	.000
ELV-IB =	.000	ELV-OB =	3.000
ELEVON =	5.000	MACH =	.600
BETAO =	.000	PHI =	.000
DX =	10.000	DY =	10.000

RUN NO. 736/ 0 RN/L = 3.27 GRADIENT INTERVAL = -1.00/ 4.00

ALPHAO	DZ	MACH	DX	DY	BETAO	PHI	ALPHAW	BETA	CY	CLN	CSL
10.233	-3.822	.59980	9.54260	10.05490	.00500	.00000	9.72970	-.00620	.01090	-.00380	-.01490
10.250	-.443	.59940	9.08310	10.02460	.01480	.00000	9.72840	-.00130	.00580	-.00350	-.01180
10.273	3.946	.60060	8.47950	10.00670	.02180	.00000	9.72760	-.00370	.00250	-.00340	-.01010
10.308	11.425	.59960	7.44960	9.99240	.02410	.00000	9.72250	-.00650	-.00060	-.00260	-.00820
10.370	26.395	.59930	5.36860	9.99710	.01400	.00000	9.72260	-.01060	-.00100	-.00090	-.00580
10.405	41.249	.60010	3.30380	10.00370	.00630	.00000	9.71680	-.00950	-.00070	.00000	-.00450
10.417	47.343	.60010	2.45280	10.00480	.00340	.00000	9.71510	-.00120	-.00010	.00020	-.00430
	GRADIENT	.00027	-.13750	-.00408	.00159	.00000	-.00018	-.00055	-.00075	.00002	.00039

RUN NO. 737/ 0 RN/L = 3.24 GRADIENT INTERVAL = -1.00/ 4.00

ALPHAO	DZ	MACH	DX	DY	BETAO	PHI	ALPHAW	BETA	CY	CLN	CSL
14.551	-1.912	.59960	8.11220	10.04110	.00360	.00000	9.75230	-.01040	.00680	-.00010	-.01570
14.559	1.350	.60000	7.66560	10.02940	.01050	.00000	9.75390	-.00860	.00570	-.00170	-.01250
14.571	5.795	.59930	7.05740	10.00480	.01380	.00000	9.74870	.00140	.00170	-.00080	-.01030
14.596	13.276	.59950	6.02790	9.99330	.01360	.00000	9.74290	-.01120	-.00190	.00030	-.00710
14.628	27.980	.60090	3.99750	9.99600	.00470	.00000	9.73330	-.02110	-.00330	.00160	-.00300
14.652	43.114	.60090	1.89710	9.99740	-.00080	.00000	9.72630	-.01210	-.00320	.00190	-.00060
14.659	57.858	.60010	-.16040	10.01600	-.01010	.00000	9.72200	-.00990	-.00010	.00200	-.00040
	GRADIENT	.00000	.00000	.00000	.00000	.00000	.00000	.00000	.00000	.00000	.00000

CA20 747/1 01 S1 ORBITER DATA (CGN062) (20 JAN 75)

ORIGINAL PAGE IS
OF POOR QUALITY

REFERENCE DATA

SREF = 2690.0000 SQ.FT. XMRP = 1109.0000 IN.XO
LREF = 474.8100 IN. YMRP = .0000 IN.YO
BREF = 936.6800 IN. ZMRP = 375.0000 IN.ZO
SCALE = .0300

PARAMETRIC DATA

ALPHAC =	4.000	BETAC =	-5.000
ELV-IB =	.000	ELV-OB =	3.000
ELEVON =	5.000	MACH =	.600
BETAO =	.000	PHI =	.000
DX =	.000	DY =	.000

RUN NO. 649/ 0 RN/L = 3.23 GRADIENT INTERVAL = -1.00/ 4.00

ALPHAO	DZ	MACH	DX	DY	BETAO	PHI	ALPHAW	BETA	CY	CLN	CSL
10.509	-1.137	.59940	.80340	1.02360	.03310	.00000	5.86240	-4.98170	-.01540	.00160	.00560
10.494	1.805	.59910	.60690	1.04100	.02650	.00000	5.85990	-4.97100	-.01230	.00150	.00320
10.489	6.479	.60010	.29110	1.07360	.01560	.00000	5.85550	-4.97800	-.00720	.00090	.00150
10.492	14.163	.59930	-.23620	1.09950	.00560	.00000	5.85080	-4.97850	-.00310	.00070	.00020
10.505	28.706	.59930	-1.23230	1.11960	-.00330	.00000	5.83810	-4.97200	.00020	.00060	-.00080
10.508	37.359	.59920	-1.82790	1.12640	-.00420	.00000	5.83380	-4.98120	.00110	.00040	-.00140
10.511	44.033	.59940	-2.28840	1.12900	-.00370	.00000	5.83110	-4.98850	.00130	.00020	-.00160
	GRADIENT	.00000	.00000	.00000	.00000	.00000	.00000	.00000	.00000	.00000	.00000

RUN NO. 648/ 0 RN/L = 3.23 GRADIENT INTERVAL = -1.00/ 4.00

ALPHAO	DZ	MACH	DX	DY	BETAO	PHI	ALPHAW	BETA	CY	CLN	CSL
14.815	1.009	.59980	-.36760	.95890	.02150	.00000	5.88900	-4.94920	-.01020	.00080	.00370
14.791	4.326	.60030	-.59540	.96740	.01680	.00000	5.88950	-4.94670	-.00910	.00160	.00180
14.781	8.540	.60010	-.88820	.99440	.01090	.00000	5.88650	-4.96920	-.00510	.00080	.00030
14.774	15.930	.60000	-1.39450	1.01820	.00320	.00000	5.87180	-4.97950	-.00140	.00040	-.00090
14.772	31.119	.59970	-2.44090	1.04050	-.00590	.00000	5.85680	-4.97430	.00230	.00030	-.00200
14.770	46.183	.59930	-3.47810	1.04640	-.00790	.00000	5.84340	-4.97320	.00320	.00030	-.00250
14.771	61.235	.60080	-4.51880	1.06280	-.01630	.00000	5.83610	-4.99050	.00500	.00080	-.00260
	GRADIENT	.00000	.00000	.00000	.00000	.00000	.00000	.00000	.00000	.00000	.00000

DATE 01 DEC 75 TABULATED SOURCE DATA - CA20 (CON063) (20 JAN 75)

CA20 747/1 01 S1 ORBITER DATA

REFERENCE DATA

SREF =	2690.0000 SQ.FT.	XMRP =	1109.0000 IN.XO		
LREF =	474.8100 IN.	YMRP =	.0000 IN.YO		
BREF =	936.6800 IN.	ZMRP =	375.0000 IN.ZO		
SCALE =	.0300				

PARAMETRIC DATA

ALPHAC =	4.000	BETAC =	-5.000
ELV-IB =	.000	ELV-OB =	3.000
ELEVON =	5.000	MACH =	.600
BETAO =	.000	PHI =	.000
DX =	10.000	DY =	.000

RUN NO. 687/ 0 RN/L = 3.29 GRADIENT INTERVAL = -1.00/ 4.00

ALPHAO	DZ	MACH	DX	DY	BETAO	PHI	ALPHAH	BETA	CY	CLN	CSL
10.405	-1.205	.59940	10.77730	1.90140	.03370	.00000	5.86870	-4.98130	-.01540	.00060	.00630
10.394	1.344	.60020	10.60790	1.91000	.02940	.00000	5.86910	-4.97040	-.01330	.00070	.00420
10.395	6.229	.60060	10.27400	1.93450	.02040	.00000	5.86640	-4.96980	-.00890	.00040	.00220
10.414	13.845	.60080	9.74720	1.95870	.01170	.00000	5.86110	-4.97800	-.00520	.00040	.00070
10.432	28.880	.60030	8.71070	1.97770	.00290	.00000	5.85270	-4.97890	-.00220	.00070	-.00040
10.441	43.759	.59900	7.68350	1.98520	.00130	.00000	5.84450	-4.99020	-.00080	.00040	-.00130
10.445	48.107	.60080	7.38000	1.98680	.00000	.00000	5.84530	-4.97980	-.00070	.00060	-.00140
	GRADIENT	.00000	.00000	.00000	.00000	.00000	.00000	.00000	.00000	.00000	.00000

RUN NO. 688/ 0 RN/L = 3.26 GRADIENT INTERVAL = -1.00/ 4.00

ALPHAO	DZ	MACH	DX	DY	BETAO	PHI	ALPHAH	BETA	CY	CLN	CSL
14.748	1.142	.60040	9.54500	1.81420	.02050	.00000	5.75210	-4.94670	-.01130	.00060	.00550
14.723	4.240	.59970	9.34440	1.81850	.01890	.00000	5.75270	-4.95250	-.01140	.00130	.00420
14.719	8.654	.59970	9.05210	1.84460	.01430	.00000	5.74690	-4.97680	-.00790	.00080	.00250
14.719	16.242	.59940	8.54770	1.86060	.00800	.00000	5.73890	-4.97240	-.00440	.00070	.00030
14.721	31.044	.59950	7.56580	1.88230	.00080	.00000	5.72550	-4.99170	-.00130	.00060	-.00050
14.728	46.344	.59940	6.54430	1.88790	-.00130	.00000	5.71610	-4.98100	-.00040	.00070	-.00110
14.727	60.991	.59900	5.55340	1.90280	-.00830	.00000	5.70940	-4.98780	.00130	.00120	-.00130
	GRADIENT	.00000	.00000	.00000	.00000	.00000	.00000	.00000	.00000	.00000	.00000

CA20 747/1 01 S1 ORBITER DATA (CGH064) (20 JAN 75)

REFERENCE DATA

SREF = 2690.0000 SQ.FT. XMRP = 1109.0000 IN.XO
LREF = 474.8100 IN. YMRP = .0000 IN.YO
BREF = 936.6800 IN. ZMRP = 375.0000 IN.ZO
SCALE = .0300

PARAMETRIC DATA

ALPHAC =	4.000	BETAC =	-5.000
ELV-IB =	.000	ELV-OB =	3.000
ELEVON =	5.000	MACH =	.600
BETAO =	.000	PHI =	.000
DX =	20.000	DY =	.000

RUN NO. 670/ 0 RN/L = 3.30 GRADIENT INTERVAL = -1.00/ 4.00

ALPHAO	DZ	MACH	DX	DY	BETAO	PHI	ALPHAW	BETA	CY	CLN	CSL
10.318	3.700	.60010	20.41600	2.83640	.02060	.00000	5.84730	-4.99440	-.00530	-.00200	.00310
10.322	6.553	.59970	20.22210	2.83310	.01590	.00000	5.84340	-4.98620	-.00530	-.00090	.00220
10.343	11.191	.60090	19.89920	2.84400	.01170	.00000	5.84120	-4.99390	-.00410	-.00050	.00120
10.354	18.631	.59990	19.38810	2.84640	.00640	.00000	5.83970	-4.98650	-.00300	.00020	.00020
10.379	33.918	.60090	18.33430	2.85720	.00180	.00000	5.83370	-4.98860	-.00110	.00030	-.00090
10.388	48.230	.60020	17.34840	2.86390	-.00110	.00000	5.82690	-4.98840	.00010	.00040	-.00170
	GRADIENT	.00000	.00000	.00000	.00000	.00000	.00000	.00000	.00000	.00000	.00000

RUN NO. 671/ 0 RN/L = 3.30 GRADIENT INTERVAL = -1.00/ 4.00

ALPHAO	DZ	MACH	DX	DY	BETAO	PHI	ALPHAW	BETA	CY	CLN	CSL
14.501	7.815	.60010	18.90670	2.72590	.01240	.00000	5.86040	-4.98530	-.00550	-.00050	.00280
14.504	11.048	.60020	18.69440	2.72740	.00960	.00000	5.85980	-4.98660	-.00540	.00000	.00250
14.508	15.518	.60040	18.37820	2.73100	.00590	.00000	5.85870	-4.98820	-.00490	.00060	.00210
14.516	22.987	.60090	17.86830	2.73860	.00130	.00000	5.85070	-4.98950	-.00360	.00100	.00180
14.524	38.017	.59990	16.83330	2.74690	.00110	.00000	5.84180	-4.98930	-.00200	.00060	.00060
14.529	52.676	.60080	15.82050	2.76460	-.00420	.00000	5.83510	-4.98920	.00160	.00050	-.00180
14.527	68.431	.60030	14.73000	2.77580	-.01180	.00000	5.83000	-4.98810	.00360	.00120	-.00220
	GRADIENT	.00000	.00000	.00000	.00000	.00000	.00000	.00000	.00000	.00000	.00000

CA20 747/1 01 S1 ORBITER DATA (CGN065) (20 JAN 75)

REFERENCE DATA

SREF =	2690.0000 SQ.FT.	XMRP =	1109.0000 IN.XO		
LREF =	474.8100 IN.	YMRP =	.0000 IN.YO		
BREF =	935.6800 IN.	ZMRP =	375.0000 IN.ZO		
SCALE =	.0300				

PARAMETRIC DATA

ALPHAC =	8.000	BETAC =	-5.000
ELV-IB =	.000	ELV-OB =	3.000
ELEVON =	5.000	MACH =	.600
BETAO =	.000	PHI =	.000
DX =	.000	DY =	.000

RUN NO. 650/ 0 RN/L = 3.23 GRADIENT INTERVAL = -1.00/ 4.00

ALPHAO	DZ	MACH	DX	DY	BETAO	PHI	ALPHAW	DETA	CY	CLN	CSL
10.285	-2.880	.59910	-.68300	.97220	.09130	.00000	9.73440	-4.99470	-.02510	-.00360	.00830
10.303	.275	.59920	-1.10310	1.02140	.06460	.00000	9.73380	-4.99020	-.01880	-.00170	.00430
10.329	4.787	.59920	-1.71740	1.07390	.03930	.00000	9.73230	-4.98730	-.01180	-.00070	.00180
10.366	12.206	.59950	-2.73470	1.11610	.01850	.00000	9.72900	-4.97920	-.00570	-.00010	.00010
10.440	27.766	.59930	-4.89330	1.15250	-.00010	.00000	9.72430	-4.97340	-.00060	.00050	-.00110
10.469	42.705	.60000	-6.95630	1.16390	-.00170	.00000	9.71690	-4.98020	.00100	.00010	-.00200
10.475	47.740	.59940	-7.65600	1.16500	-.00340	.00000	9.71310	-4.97990	.00110	.00030	-.00200
	GRADIENT	.00000	.00000	.00000	.00000	.00000	.00000	.00000	.00000	.00000	.00000

RUN NO. 651/ 0 RN/L = 3.22 GRADIENT INTERVAL = -1.00/ 4.00

ALPHAO	DZ	MACH	DX	DY	BETAO	PHI	ALPHAW	BETA	CY	CLN	CSL
14.666	-.982	.60030	-2.00400	.90170	.06040	.00000	9.76620	-4.94790	-.02390	.00100	.00560
14.656	2.094	.60050	-2.41440	.94080	.04440	.00000	9.76530	-4.94600	-.01810	.00130	.00310
14.666	8.577	.60090	-3.02330	.98050	.02720	.00000	9.75850	-4.94030	-.01190	.00150	.00110
14.686	14.365	.60070	-4.09400	1.02280	.01090	.00000	9.75280	-4.98110	-.00730	.00170	.00150
14.713	29.395	.60010	-6.16750	1.06310	-.00360	.00000	9.73960	-4.98140	-.00130	.00100	.00110
14.725	44.077	.59950	-8.20840	1.07790	-.00530	.00000	9.73030	-4.98880	.00110	.00050	-.00080
	GRADIENT	.00007	-.13343	.01271	-.00520	.00000	-.00029	.00062	.00189	.00010	-.00081

CA20 747/1 01 SI ORBITER DATA (CGN066) (20 JAN 75)

REFERENCE DATA

SREF = 2690.0000 SQ.FT. XMRP = 1109.0000 IN.XO
LREF = 474.8100 IN. YMRP = .0000 IN.YO
BREF = 936.6800 IN. ZMRP = 375.0000 IN.ZO
SCALE = .0300

PARAMETRIC DATA

ALPHAC = 8.000 BETAC = -5.000
ELV-IB = .000 ELV-OB = 3.000
ELEVON = 5.000 MACH = .600
BETAO = .000 PHI = .000
DX = 10.000 DY = .000

RUN NO. 690/ 0 RN/L = 3.24 GRADIENT INTERVAL = -1.00/ 4.00

ALPHAO	DZ	MACH	DX	DY	BETAO	PHI	ALPHAW	BETA	CY	CLN	CSL
10.206	-2.705	.59930	9.36200	1.88080	.07970	.00000	9.75680	-4.99820	-.02350	-.00380	.00730
10.219	.329	.60060	8.95250	1.90700	.06110	.00000	9.73590	-4.97970	-.01880	-.00220	.00440
10.243	4.772	.60000	8.34240	1.94530	.04190	.00000	9.73540	-4.98670	-.01350	-.00120	.00270
10.288	12.369	.60000	7.29150	1.98070	.02420	.00000	9.73300	-4.98620	-.00790	-.00040	.00060
10.356	27.344	.59990	5.21050	2.01480	.00890	.00000	9.73050	-4.99540	-.00330	.00020	-.00080
10.397	42.540	.59940	3.09140	2.02090	.00630	.00000	9.72630	-4.98720	-.00180	.00000	-.00160
10.407	48.511	.60000	2.25840	2.02640	.00300	.00000	9.72420	-4.98700	-.00100	.00030	-.00180
	GRADIENT	.00000	.00000	.00000	.00000	.00000	.00000	.00000	.00000	.00000	.00000

RUN NO. 689/ 0 RN/L = 3.25 GRADIENT INTERVAL = -1.00/ 4.00

ALPHAO	DZ	MACH	DX	DY	BETAO	PHI	ALPHAW	BETA	CY	CLN	CSL
14.592	-.448	.59960	7.86760	1.78020	.05410	.00000	9.76400	-4.95400	-.02340	.00060	.00550
14.594	2.908	.60010	7.41550	1.81260	.04180	.00000	9.76290	-4.95290	-.01780	.00050	.00340
14.610	7.309	.60030	6.81330	1.84130	.03010	.00000	9.75780	-4.95500	-.01290	.00060	.00200
14.636	14.529	.60000	5.81930	1.88240	.01770	.00000	9.75460	-4.99580	-.00890	.00110	.00100
14.677	29.855	.59980	3.70390	1.90670	.00380	.00000	9.74490	-4.98070	-.00450	.00150	.00060
14.699	44.920	.59970	1.81159	1.92310	.00160	.00000	9.73540	-5.00370	-.00350	.00130	.00060
14.711	59.693	.60060	-.45210	1.93410	-.00650	.00000	9.73180	-4.98710	-.00090	.00160	.00020
	GRADIENT	.00015	-.13472	.00965	-.00367	.00000	-.00033	.00033	.00167	-.00003	-.00063

CA20 747/1 01 S1 ORBITER DATA (CGN067) (20 JAN 75)

REFERENCE DATA

SREF =	2690.0000 SQ.FT.	XMRP =	1109.0000 IN.XO		
LREF =	474.8100 IN.	YMRP =	.0000 IN.YO		
BREF =	936.6800 IN.	ZMRP =	375.0000 IN.ZO		
SCALE =	.0300				

PARAMETRIC DATA

ALPHAC =	8.000	BETAC =	-5.000
ELV-IB =	.000	ELV-OB =	3.000
ELEVON =	5.000	MACH =	.600
BETAO =	.000	PHI =	.000
DX =	20.000	DY =	.000

RUN NO. 673/ 0 RN/L = 3.28 GRADIENT INTERVAL = -1.00/ 4.00

ALPHAO	DZ	MACH	DX	DY	BETAO	PHI	ALPHAW	BETA	CY	CLN	CSL
10.219	-1.170	.60840	19.17340	2.82560	.05290	.00000	9.73230	-4.99720	-.01360	-.00450	.00500
10.227	1.973	.59930	18.74300	2.83210	.03910	.00000	9.73270	-4.99830	-.01210	-.00230	.00350
10.253	6.418	.60050	18.12870	2.85480	.02700	.00000	9.73250	-4.99490	-.00890	-.00130	.00210
10.286	13.777	.59970	17.11080	2.87030	.01650	.00000	9.73000	-4.98660	-.00530	-.00070	.00050
10.356	28.939	.60080	14.99660	2.89840	.00590	.00000	9.72870	-4.98820	-.00220	.00000	-.00070
10.397	44.164	.59940	12.87230	2.89650	.00370	.00000	9.72290	-4.98800	-.00070	.00000	-.00160
10.406	49.620	.59970	12.11340	2.89960	.00120	.00000	9.71950	-4.98780	-.00030	.00020	-.00180
	GRADIENT	.00000	.00000	.00000	.00000	.00000	.00000	.00000	.00000	.00000	.00000

RUN NO. 672/ 0 RN/L = 3.28 GRADIENT INTERVAL = -1.00/ 4.00

ALPHAO	DZ	MACH	DX	DY	BETAO	PHI	ALPHAW	BETA	CY	CLN	CSL
14.374	1.887	.59920	17.50970	2.70460	.03430	.00000	9.75470	-4.95350	-.01300	-.00140	.00330
14.386	5.002	.59960	17.08360	2.71260	.02630	.00000	9.75110	-4.94660	-.01080	-.00050	.00220
14.403	9.317	.60070	16.48890	2.74660	.01890	.00000	9.75120	-4.98660	-.00860	.00010	.00140
14.432	16.929	.60030	15.44000	2.76710	.01050	.00000	9.74480	-4.99620	-.00590	.00060	.00060
14.474	32.128	.60020	13.33650	2.77920	.00190	.00000	9.73740	-4.98890	-.00330	.00130	-.00040
14.499	46.955	.60020	11.26920	2.78500	-.00180	.00000	9.73650	-4.98880	-.00260	.00160	-.00020
14.362	60.738	.60070	9.37410	2.79800	-.00980	.00000	9.72720	-4.98790	-.00080	.00230	.00010
	GRADIENT	.00000	.00000	.00000	.00000	.00000	.00000	.00000	.00000	.00000	.00000

ORIGINAL PAGE IS
OF POOR QUALITY

CA20 747/1 01 S1 ORBITER DATA (CGN068) (20 JAN 75)

REFERENCE DATA

SREF = 2690.0000 SQ.FT. XMRP = 1109.0000 IN.XO
LREF = 474.8100 IN. YMRP = .0000 IN.YO
BREF = 936.6800 IN. ZMRP = 375.0000 IN.ZO
SCALE = .0300

PARAMETRIC DATA

ALPHAC = 4.000 BETAC = -5.000
ELV-IB = .000 ELV-OB = 3.000
ELEVON = 5.000 MACH = .600
BETAO = .000 PHI = .000
DX = .000 DY = 10.000

RUN NO. 776/ 0 RN/L = 3.29 GRADIENT INTERVAL = -1.00/ 4.00

ALPHAO	DZ	MACH	DX	DY	BETAO	PHI	ALPHAW	BETA	CY	CLN	CSL
10.526	-1.143	.60050	.82500	11.02580	.03330	.00000	5.82390	-4.98300	-.00640	-.00150	-.00420
10.516	1.191	.59940	.66590	11.02200	.03310	.00000	5.82210	-4.98350	-.00740	-.00100	-.00390
10.514	5.578	.59990	.36930	11.02810	.02930	.00000	5.81590	-4.98570	-.00670	-.00070	-.00380
10.520	13.286	.59990	-.15620	11.04100	.01980	.00000	5.81020	-4.97390	-.00470	-.00020	-.00350
10.530	28.354	.59970	-1.18290	11.06950	.00500	.00000	5.80160	-4.99410	-.00170	.00060	-.00290
10.538	43.310	.60020	-2.20400	11.08460	-.00370	.00000	5.79490	-4.99160	.00020	.00100	-.00270
10.536	47.055	.60050	-2.45960	11.08530	-.00430	.00000	5.79340	-4.99080	.00020	.00110	-.00270
	GRADIENT	.00000	.00000	.00000	.00000	.00000	.00000	.00000	.00000	.00000	.00000

RUN NO. 782/ 0 RN/L = 3.21 GRADIENT INTERVAL = -1.00/ 4.00

ALPHAO	DZ	MACH	DX	DY	BETAO	PHI	ALPHAW	BETA	CY	CLN	CSL
14.852	1.732	.59980	-.39120	10.90410	.03150	.00000	5.85610	-4.98030	-.01420	.00230	-.00010
14.836	4.566	.59980	-.58540	10.91290	.03110	.00000	5.85110	-4.98100	-.01230	.00140	-.00050
14.828	8.860	.59930	-.88970	10.92830	.02600	.00000	5.84790	-4.97830	-.00920	.00080	-.00150
14.824	16.510	.59970	-1.41720	10.95100	.01650	.00000	5.83890	-4.98390	-.00560	.00080	-.00240
14.826	31.452	.59940	-2.44000	10.98190	.00210	.00000	5.82350	-4.99490	-.00110	.00100	-.00290
14.825	46.606	.59980	-3.48110	11.00070	-.00690	.00000	5.81640	-4.99550	.00120	.00130	-.00290
14.822	61.410	.60010	-4.49630	11.01650	-.01520	.00000	5.80690	-4.99090	.00330	.00160	-.00280
	GRADIENT	.00000	.00000	.00000	.00000	.00000	.00000	.00000	.00000	.00000	.00000

CA20 747/1 01 S1 ORBITER DATA (CGN069) (03 SEP 75)

REFERENCE DATA

SREF =	2690.0000 SQ.FT.	XMRP =	1109.0000 IN.XO
LREF =	474.8100 IN.	YMRP =	.0000 IN.YO
BREF =	936.6800 IN.	ZMRP =	375.0000 IN.ZO
SCALE =	0300		

PARAMETRIC DATA

ALPHAC =	4.000	BETAC =	-5.000
ELV-IB =	.000	ELV-OB =	3.000
ELEVON =	5.000	MACH =	.600
BETAO =	.000	PHI =	.000
DX =	10.000	DY =	10.000

RUN NO. 0/ 0 RN/L = 3.24 GRADIENT INTERVAL = .00/ 12.00

ALPHAO	DZ	MACH	DX	DY	BETAO	PHI	ALPHAH	BETA	CY	CLN	CSL
10.422	-2.280	.60090	10.86020	11.92480	.02940	.00000	5.88230	-4.99080	-.00250	-.00330	-.00380
10.405	1.098	.60050	10.63330	11.90880	.03080	.00000	5.86150	-4.99070	-.00640	-.00170	-.00330
10.409	5.675	.60010	10.31780	11.91340	.02640	.00000	5.85890	-4.99290	-.00600	-.00110	-.00340
10.422	13.013	.60030	9.81090	11.92200	.01880	.00000	5.85720	-4.98990	-.00460	-.00050	-.00330
10.450	28.103	.60030	8.76710	11.94740	.00440	.00000	5.84830	-5.00120	-.00140	.00050	-.00300
10.460	43.255	.60080	7.71670	11.95920	-.00230	.00000	5.84490	-4.99910	.00020	.00080	-.00280
10.461	46.967	.59980	7.46120	11.96490	-.00580	.00000	5.84130	-4.99650	.00100	.00110	-.00290
	GRADIENT	-.00009	-.06892	.00100	-.00095	.00000	-.00057	-.00048	.00009	.00013	-.00002

RUN NO. 0/ 0 RN/L = 3.24 GRADIENT INTERVAL = .00/ 12.00

ALPHAO	DZ	MACH	DX	DY	BETAO	PHI	ALPHAH	BETA	CY	CLN	CSL
14.693	.236	.60030	9.58110	11.80380	.02130	.00000	5.88510	-4.98800	-.00930	.00070	.00050
14.686	3.450	.59990	9.34130	11.79350	.02210	.00000	5.88520	-4.98830	-.01180	.00160	.00140
14.686	8.165	.59970	9.01260	11.80250	.01790	.00000	5.88170	-4.98550	-.00960	.00130	.00120
14.674	15.415	.60030	8.51160	11.82650	.00960	.00000	5.87290	-4.99850	-.00580	.00110	.00050
14.676	30.037	.59960	7.49850	11.85690	-.00230	.00000	5.85430	-5.01000	-.00040	.00120	-.00210
14.680	45.279	.59970	6.44230	11.87390	-.00980	.00000	5.85630	-5.00360	.00240	.00130	-.00260
14.681	60.620	.60010	5.37930	11.89030	-.01810	.00000	5.84740	-4.99860	.00500	.00160	-.00300
	GRADIENT	-.00007	-.06922	-.00001	-.00046	.00000	-.00057	.00034	-.00000	.00007	.00008

DATE 01 DEC 75 TABULATED SOURCE DATA - CA20

CA20 747/1 01 SI ORBITER DATA (CGH070) (20 JAN 75)

REFERENCE DATA

SREF =	2690.0000 SQ.FT.	XMRP =	1109.0000 IN.XO		
LREF =	474.8100 IN.	YMRP =	.0000 IN.YO		
BREF =	936.6800 IN.	ZMRP =	375.0000 IN.ZO		
SCALE =	.0300				

PARAMETRIC DATA

ALPHAC =	8.000	BETAC =	-5.000
ELV-IB =	.000	ELV-OB =	3.000
ELEVON =	5.000	MACH =	.600
BETAO =	.000	PHI =	.000
DX =	.000	DY =	10.000

RUN NO. 779/ 0 RN/L = 3.26 GRADIENT INTERVAL = -1.00/ 4.00

ALPHAO	DZ	MACH	DX	DY	BETAO	PHI	ALPHAH	BETA	CY	CLN	CSL
10.342	-2.449	.60020	-.70020	11.07990	.03430	.00000	9.67310	-4.96870	-.00100	-.00400	-.00670
10.363	.833	.60030	-1.14560	11.06330	.04050	.00000	9.67390	-4.96980	-.00400	-.00350	-.00680
10.393	5.429	.60090	-1.77560	11.06390	.03940	.00000	9.67190	-4.97940	-.00460	-.00300	-.00680
10.426	12.730	.60070	-2.77410	11.07080	.03250	.00000	9.66910	-4.98290	-.00460	-.00190	-.00610
10.479	27.999	.60040	-4.87390	11.09480	.01510	.00000	9.66510	-4.99470	-.00260	-.00030	-.00470
10.511	42.823	.60060	-6.92003	11.11030	.00500	.00000	9.65760	-4.98200	-.00110	.00040	-.00390
10.514	46.832	.60000	-7.47470	11.11160	.00260	.00000	9.65660	-4.97380	-.00090	.00070	-.00370
	GRADIENT	.00000	.00000	.00000	.00000	.00000	.00000	.00000	.00000	.00000	.00000

RUN NO. 786/ 0 RN/L = 3.19 GRADIENT INTERVAL = -1.00/ 4.00

ALPHAO	DZ	MACH	DX	DY	BETAO	PHI	ALPHAH	BETA	CY	CLN	CSL
14.727	.234	.59910	-2.11200	10.95930	.03290	.00000	9.69510	-4.97390	-.00850	.00040	-.00580
14.734	3.279	.60060	-2.52890	10.95100	.03560	.00000	9.69350	-4.97670	-.01010	.00050	-.00460
14.749	7.626	.60090	-3.12530	10.95380	.03220	.00000	9.68840	-4.98000	-.01020	.00100	-.00400
14.763	15.024	.60020	-4.13640	10.96820	.02370	.00000	9.68090	-4.97890	-.00840	.00130	-.00310
14.794	39.355	.60080	-6.23900	10.99580	.00990	.00000	9.67220	-5.00080	-.00570	.00160	-.00060
14.799	45.083	.59910	-8.26830	11.02160	-.00320	.00000	9.66110	-4.97740	-.00170	.00180	-.00120
14.813	60.265	.60050	-10.37530	11.04200	-.01020	.00000	9.65630	-4.97420	.00160	.00160	-.00260
	GRADIENT	.00049	-.13688	-.00273	.00089	.00000	-.00053	-.00092	-.00053	.00003	.00039

CA20 747/1 01 SI ORBITER DATA (CON071) (20 JAN 75)

REFERENCE DATA

SREF = 2690.0000 SQ.FT. XMRP = 1109.0000 IN.XO
LREF = 474.8100 IN. YMRP = .0000 IN.YO
BREF = 936.6900 IN. ZMRP = 375.0000 IN.ZO
SCALE = .0300

PARAMETRIC DATA

ALPHAC = 8.000 BETAC = -5.000
ELV-IB = .000 ELV-OB = 3.000
ELEVON = 5.000 MACH = .600
BETAO = .000 PHI = .000
DX = 10.000 DY = 10.000

RUN NO. 740/ 0 RN/L = 3.25 GRADIENT INTERVAL = -1.00/ 4.00

ALPHAO	DZ	MACH	DX	DY	BETAO	PHI	ALPHAW	BETA	CY	CLN	CSL
10.224	-3.964	.59950	9.54340	11.98930	.02010	.00000	9.72770	-4.98500	.00390	-.00460	-.00560
10.249	-1.071	.59930	9.14780	11.98350	.03160	.00000	9.72740	-4.98230	-.00160	-.00380	-.00580
10.273	3.575	.59930	8.51140	11.95450	.03510	.00000	9.72430	-4.99380	-.00360	-.00350	-.00500
10.307	11.249	.59930	7.45290	11.93080	.03020	.00000	9.72660	-5.00460	-.00400	-.00240	-.00580
10.375	26.103	.59980	5.39230	11.99210	.01390	.00000	9.72030	-5.00760	-.00180	-.00070	-.00490
10.407	41.260	.59940	3.28540	11.99630	.00440	.00000	9.71560	-5.00550	-.00020	.00000	-.00400
10.427	47.378	.59990	2.42810	11.99460	.00110	.00000	9.71360	-4.98920	.00040	.00030	-.00390
	GRADIENT	.00000	.00000	.00000	.00000	.00000	.00000	.00000	.00000	.00000	.00000

RUN NO. 741/ 0 RN/L = 3.24 GRADIENT INTERVAL = -1.00/ 4.00

ALPHAO	DZ	MACH	DX	DY	BETAO	PHI	ALPHAW	BETA	CY	CLN	CSL
14.548	-1.395	.59950	8.03360	11.85890	.02640	.00000	9.75250	-4.98160	-.00260	-.00160	-.00770
14.553	1.311	.60060	7.66380	11.85090	.02930	.00001	9.75100	-4.99080	-.00500	-.00110	-.00690
14.570	8.124	.60020	7.00200	11.85400	.02630	.00000	9.74580	-5.00250	-.00570	-.00030	-.00640
14.599	13.813	.59960	5.93860	11.85930	.01810	.00000	9.74180	-5.00110	-.00530	.00070	-.00510
14.637	28.816	.60080	3.86530	11.87690	.00400	.00000	9.73430	-5.00730	-.00390	.00180	-.00200
14.658	43.625	.60080	1.80890	11.89170	-.00480	.00000	9.72660	-5.00060	-.00210	.00210	-.00040
14.668	58.608	.60080	-.28100	11.91350	-.01270	.00000	9.72080	-5.00520	.00100	.00190	-.00040
	GRADIENT	.00000	.00000	.00000	.00000	.00000	.00000	.00000	.00000	.00000	.00000

CA20 747/1 01 SI ORBITER DATA (CGN072) (20 JAN 75)

REFERENCE DATA

SREF = 2690.0000 SQ.FT. XMRP = 1109.0000 IN.XO
LREF = 474.8100 IN. YMRP = .0000 IN.YO
BREF = 936.6800 IN. ZMRP = 375.0000 IN.ZO
SCALE = .0300

PARAMETRIC DATA

ALPHAC =	4.000	BETAC =	5.000
ELV-IB =	.000	ELV-OB =	3.000
ELEVON =	5.000	MACH =	.600
BETAO =	.000	PHI =	.000
DX =	.000	DY =	10.000

RUN NO. 777/ 0 RN/L = 3.27 GRADIENT INTERVAL = -1.00/ 4.00

ALPHAO	DZ	MACH	DX	DY	BETAO	PHI	ALPHAH	BETA	CY	CLN	CSL
10.561	-1.260	.60020	.82840	8.80620	.04300	.00000	5.82950	5.04410	-.00070	-.00360	-.01770
10.547	1.334	.60070	.65390	8.81240	.03520	.00000	5.82790	5.04880	.00000	-.00360	-.01410
10.536	5.878	.60010	.34760	8.81490	.03050	.00000	5.82070	5.02710	-.00110	-.00260	-.01070
10.536	13.042	.60030	-.13900	8.81520	.02440	.00000	5.81370	5.02260	-.00200	-.00160	-.00780
10.541	28.032	.60030	-1.15930	8.82060	.01180	.00000	5.80310	5.03420	-.00180	-.00010	-.00500
10.562	43.587	.59990	-2.23230	8.83030	.00450	.00000	5.79570	5.03470	-.00090	.00040	-.00380
10.545	47.071	.60050	-2.46160	8.83200	.00240	.00000	5.79470	5.03480	-.00070	.00060	-.00360
	GRADIENT	.00000	.00000	.00000	.00000	.00000	.00000	.00000	.00000	.00000	.00000

RUN NO. 783/ 0 RN/L = 3.21 GRADIENT INTERVAL = -1.00/ 4.00

ALPHAO	DZ	MACH	DX	DY	BETAO	PHI	ALPHAH	BETA	CY	CLN	CSL
14.885	1.660	.60010	-.39220	8.87450	.03220	.00000	5.85770	5.00070	-.00960	.00270	-.01140
14.865	4.767	.59920	-.60880	8.88830	.02700	.00000	5.85470	5.01010	-.00660	.00100	-.00780
14.851	8.930	.59950	-.89480	8.88570	.02380	.00000	5.85730	5.01040	-.00740	.00100	-.00430
14.843	16.495	.59930	-1.41200	8.90170	.01880	.00000	5.84480	4.99980	-.00480	.00030	-.00350
14.833	31.538	.60060	-2.44310	8.92270	.00830	.00000	5.82820	4.97960	-.00250	.00070	-.00310
14.829	46.682	.60030	-3.48380	8.93760	-.00030	.00000	5.81730	4.98730	-.00010	.00090	-.00310
14.822	61.660	.59980	-4.51590	8.95050	-.00770	.00000	5.81000	4.98860	.00160	.00130	-.00310
	GRADIENT	.00000	.00000	.00000	.00000	.00000	.00000	.00000	.00000	.00000	.00000

CA20 747/1 01 SI ORBITER DATA (CGN0731) (30 JUL 75)

REFERENCE DATA

SREF =	2690.0000 SQ.FT.	XMRP =	1109.0000 IN.XO
LREF =	474.8100 IN.	YMRP =	.0000 IN.YO
BREF =	936.6800 IN.	ZMRP =	375.0000 IN.ZO
SCALE =	.0300		

PARAMETRIC DATA

ALPHAC =	4.000	BETAC =	5.000
ELV-IB =	.000	ELV-OB =	3.000
ELEVON =	5.000	MACH =	.600
BETAD =	.000	PHI =	.000
DX =	10.000	DY =	10.000

RUN NO. 743/ 0 RN/L = 3.24 GRADIENT INTERVAL = -1.00/ 4.00

ALPHAD	DZ	MACH	DX	DY	BETAD	PHI	ALPHAW	BETA	CY	CLN	CSL
10.456	-2.278	.60010	10.65340	7.94940	.03880	.00000	5.86640	5.03030	-.00020	-.00340	-.01930
10.441	.974	.59990	10.63180	7.95910	.03240	.00000	5.83880	5.01890	.00050	-.00340	-.01470
10.437	5.632	.60000	10.31420	7.96140	.02670	.00000	5.86360	5.00590	-.00040	-.00250	-.01120
10.440	12.947	.60040	9.81390	7.96130	.02090	.00000	5.85910	5.00010	-.00120	-.00170	-.00810
10.454	28.272	.59990	8.75740	7.96870	.00920	.00000	5.84940	4.99630	-.00090	-.00030	-.00510
10.462	43.215	.59990	7.72040	7.97210	.00210	.00000	5.84560	5.00410	-.00030	.00050	-.00390
10.464	46.952	.60080	7.46360	7.97530	-.00040	.00000	5.84240	5.00430	.00020	.00070	-.00370
	GRADIENT	.00000	.00000	.00000	.00000	.00000	.00000	.00000	.00000	.00000	.00000

RUN NO. 746/ 0 RN/L = 3.23 GRADIENT INTERVAL = -1.00/ 4.00

ALPHAD	DZ	MACH	DX	DY	BETAD	PHI	ALPHAW	BETA	CY	CLN	CSL
14.699	.081	.60070	9.56470	8.04510	.01920	.00000	5.89040	5.01680	-.00530	.00240	-.01250
14.686	3.398	.60090	9.33940	8.04540	.01660	.00000	5.88440	5.01860	-.00490	.00170	-.00870
14.677	8.089	.59980	9.01750	8.04550	.01310	.00000	5.87840	5.01900	-.00460	.00130	-.00530
14.677	15.482	.60080	8.51410	8.04890	.00880	.00000	5.86910	5.00690	-.00490	.00150	-.00240
14.674	30.336	.59920	7.49140	8.06590	.00080	.00000	5.85560	5.00270	-.00150	.00120	-.00200
14.676	45.437	.59990	6.44350	8.08710	-.00650	.00000	5.84830	4.99500	.00160	.00110	-.00290
14.674	60.598	.59920	5.39480	8.09960	-.01450	.00000	5.83970	5.00380	.00420	.00130	-.00310
	GRADIENT	.00006	-.06823	.00009	-.00078	.00000	-.00181	.00054	.00012	-.00021	.00115

ORIGINAL PAGE IS
OF POOR QUALITY

CA20 747/1 01 SI ORBITER DATA (CON074) (20 JAN 75)

REFERENCE DATA

SREF = 2690.0000 SQ.FT. XMRP = 1109.0000 IN.XO
LREF = 474.8100 IN. YMRP = .0000 IN.YO
BREF = 936.6800 IN. ZMRP = 375.0000 IN.ZO
SCALE = .0300

PARAMETRIC DATA

ALPHAC = 8.000 BETAC = 5.000
ELV-IB = .000 ELV-OB = 3.000
ELEVON = 5.000 MACH = .600
BETAO = .000 PHI = .000
DX = .000 DY = 10.000

RUN NO. 778/ 0 RN/L = 3.27 GRADIENT INTERVAL = -1.00/ 4.00

ALPHAO	DZ	MACH	DX	DY	BETAO	PHI	ALPHAW	BETA	CY	CLN	CSL
10.386	-2.569	.60000	-.67920	8.78930	.04720	.00000	9.67710	5.05610	.00480	-.00640	-.02330
10.382	.494	.59990	-1.09610	8.79940	.03450	.00000	9.67430	5.04960	.00510	-.00530	-.01810
10.404	5.444	.59920	-1.77530	8.79630	.02930	.00000	9.67330	5.02910	.00280	-.00400	-.01380
10.446	12.879	.60080	-2.79560	8.78530	.02760	.00000	9.67050	5.02490	.00030	-.00290	-.01030
10.484	27.655	.60070	-4.85200	8.77840	.01750	.00000	9.66630	5.03990	-.00160	-.00090	-.00650
10.507	42.785	.60090	-6.91030	8.78230	.01070	.00000	9.65900	5.03980	-.00150	-.00010	-.00470
10.510	46.810	.59970	-7.47130	8.78620	.00720	.00000	9.66000	5.04000	-.00120	.00030	-.00440
	GRADIENT	.00000	.00000	.00000	.00000	.00000	.00000	.00000	.00000	.00000	.00000

RUN NO. 785/ 0 RN/L = 3.20 GRADIENT INTERVAL = -1.00/ 4.00

ALPHAO	DZ	MACH	DX	DY	BETAO	PHI	ALPHAW	BETA	CY	CLN	CSL
14.769	.421	.60000	-2.15370	8.90200	.01960	.00000	9.69950	5.01660	.00270	.00020	-.01970
14.763	3.277	.60030	-2.53970	8.89780	.01780	.00000	9.69440	5.00270	.00130	.00000	-.01470
14.765	7.611	.60040	-3.12710	8.88370	.01750	.00000	9.68640	4.99670	-.00180	.00060	-.01020
14.776	14.897	.59960	-4.11930	8.86850	.01660	.00000	9.67900	5.00080	-.00460	.00130	-.00620
14.801	30.085	.60030	-6.19810	8.86980	.01090	.00000	9.66900	4.98280	-.00550	.00160	-.00170
14.812	45.241	.60060	-8.28580	8.87710	.00540	.00000	9.66320	4.99950	-.00360	.00130	-.00120
14.809	60.161	.60050	-10.35530	8.90350	-.00530	.00000	9.65990	4.99330	.00040	.00140	-.00260
	GRADIENT	.00011	-.13515	-.00147	-.00063	.00000	-.00179	-.00487	-.00049	-.00007	.00175

CA20 747/1 01 S1 ORBITER DATA (CON075) (20 JAN 75)

REFERENCE DATA

SREF = 2690.0000 SQ.FT. XMRP = 1109.0000 IN.XO
LREF = 474.8100 IN. YMRP = .0000 IN.YO
BREF = 936.6800 IN. ZMRP = 375.0000 IN.ZO
SCALE = .0300

PARAMETRIC DATA

ALPHAC =	8.000	BETAC =	5.000
ELV-IB =	.000	ELV-OB =	3.000
ELEVON =	5.000	MACH =	.600
BETAO =	.000	PHI =	.000
DX =	10.000	DY =	10.000

RUN NO. 744/ 0 RN/L = 3.24 GRADIENT INTERVAL = -1.00/ 4.00

ALPHAO	DZ	MACH	DX	DY	BETAO	PHI	ALPHAW	BETA	CY	CLN	CSL
10.291	-4.295	.59980	9.60240	7.92050	.05400	.00000	9.71810	5.02020	.00260	-.00640	-.02550
10.284	-1.016	.60000	9.14600	7.93820	.03580	.00000	9.72130	5.02130	.00490	-.00550	-.01900
10.296	3.234	.60090	8.66250	7.93260	.03000	.00000	9.71870	5.02420	.00370	-.00450	-.01500
10.325	10.653	.60020	7.54070	7.92720	.02680	.00000	9.71900	5.01130	.00130	-.00330	-.01100
10.391	26.076	.59950	5.40030	7.92620	.01500	.00000	9.71390	5.00840	-.00020	-.00130	-.00700
10.421	40.921	.60020	3.33920	7.93180	.00330	.00000	9.70970	5.00110	-.00030	-.00040	-.00510
10.429	47.391	.59990	2.44250	7.93360	.00400	.00000	9.70550	5.00900	.00030	-.00010	-.00460
	GRADIENT	.00000	.00000	.00000	.00000	.00000	.00000	.00000	.00000	.00000	.00000

RUN NO. 745/ 0 RN/L = 3.23 GRADIENT INTERVAL = -1.00/ 4.00

ALPHAO	DZ	MACH	DX	DY	BETAO	PHI	ALPHAW	BETA	CY	CLN	CSL
14.583	-1.682	.60010	8.09210	8.06760	.01710	.00000	9.74680	5.02630	.00880	-.00130	-.02490
14.578	1.393	.59950	7.64570	8.06130	.01580	.00000	9.74410	5.01250	.00660	-.00140	-.01910
14.585	5.736	.60040	7.05370	8.04400	.01390	.00000	9.74010	5.01420	.00310	-.00050	-.01440
14.601	12.961	.60040	6.05200	8.03060	.01140	.00000	9.73450	5.00960	-.00010	.00040	-.00930
14.629	28.063	.59950	3.97810	8.02230	.00320	.00000	9.72720	5.00640	-.00280	.00180	-.00380
14.652	42.937	.60070	1.91620	8.02770	-.00220	.00000	9.71930	4.99980	-.00260	.00200	-.00100
14.658	57.817	.59950	-.15670	8.04120	-.00950	.00000	9.71390	5.00110	-.00020	.00200	-.00040
	GRADIENT	.00000	.00000	.00000	.00000	.00000	.00000	.00000	.00000	.00000	.00000

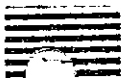

ORIGINAL PAGE IS
OF POOR QUALITY

CA20 747/1 01 S1 ORBITER DATA (CGN076) (20 JAN 75)

REFERENCE DATA

SREF = 2690.0000 SQ.FT. XMRP = 1109.0000 IN.XO
LREF = 474.8100 IN. YMRP = .0000 IN.YO
BREF = 936.6800 IN. ZMRP = 375.0000 IN.ZO
SCALE = .0300

PARAMETRIC DATA

ALPHAC = 4.000 BETAC = -5.000
ELV-IB = .000 ELV-OB = 3.000
ELEVON = 5.000 MACH = .600
BETAO = .000 PHI = 7.500
DX = .000 DY = .000

RUN NO. 700/ 0 RN/L = 3.24 GRADIENT INTERVAL = -1.00/ 4.00

ALPHAO	DZ	MACH	DX	DY	BETAO	PHI	ALPHAH	BETA	CY	CLN	CSL
10.498	-1.277	.59980	.83250	1.15460	.36450	7.50000	5.83850	-5.05480	-.01880	.00100	.00848
10.489	2.021	.60000	.61190	1.18340	.35490	7.50000	5.83680	-5.04370	-.01470	.00080	.00618
10.492	6.318	.60080	.32120	1.21560	.34580	7.50000	5.83320	-5.04780	-.01030	.00030	.00420
10.500	13.726	.60020	-.18460	1.24350	.33660	7.50000	5.82810	-5.04000	-.00660	.00030	.00250
10.510	28.683	.60070	-1.20160	1.27850	.32710	7.50000	5.81510	-5.04710	-.00300	.00030	.00040
10.516	43.777	.60040	-2.23760	1.29820	.32620	7.50000	5.80850	-5.04020	-.00170	.00000	-.00100
10.513	47.275	.59920	-2.47710	1.29290	.32410	7.50000	5.80680	-5.04010	-.00120	.00000	-.00120
	GRADIENT	.00000	.00000	.00000	.00000	.00000	.00000	.00000	.00000	.00000	.00000

RUN NO. 699/ 0 RN/L = 3.25 GRADIENT INTERVAL = -1.00/ 4.00

ALPHAO	DZ	MACH	DX	DY	BETAO	PHI	ALPHAH	BETA	CY	CLN	CSL
14.757	1.908	.59900	-.38000	1.14030	.90370	7.50000	5.86610	-5.05330	-.01950	-.00100	.00438
14.746	4.533	.59970	-.55960	1.15770	.89700	7.50000	5.86300	-5.04270	-.01640	-.00130	.00310
14.741	9.089	.59940	-.87360	1.17880	.89010	7.50000	5.85990	-5.04130	-.01310	-.00140	.00160
14.736	16.707	.59980	-1.39380	1.20160	.88280	7.50000	5.84940	-5.04330	-.00990	-.00150	.00000
14.734	31.718	.60020	-2.41740	1.22950	.87480	7.50000	5.83020	-5.04070	-.00640	-.00160	-.00150
14.738	46.644	.59920	-3.44230	1.23390	.87190	7.50000	5.81870	-5.04800	-.00720	-.00100	-.00030
14.739	61.610	.60030	-4.47430	1.24610	.86560	7.50000	5.81480	-5.03960	-.00580	-.00050	-.00060
	GRADIENT	.00000	.00000	.00000	.00000	.00000	.00000	.00000	.00000	.00000	.00000

CA20 747/1 01 S1 ORBITER DATA (CGH077) (20 JAN 75)

REFERENCE DATA

SREF =	2690.0000 SQ.FT.	XMRP =	1109.0000 IN.XO		
LREF =	474.8100 IN.	YMRP =	.0000 IN.YO		
BREF =	935.6800 IN.	ZMRP =	375.0000 IN.ZO		
SCALE =	.0300				

PARAMETRIC DATA

ALPHAC =	4.000	BETAC =	-5.000
ELV-IB =	.000	ELV-OB =	3.000
ELEVON =	5.000	MACH =	.600
BETAO =	.000	PHI =	7.500
DX =	10.000	DY =	.000

RUN NO. 679/ 0 RN/L = 3.29 GRADIENT INTERVAL = -1.00/ 4.00

ALPHAO	DZ	MACH	DX	DY	BETAO	PHI	ALPHAW	BETA	CY	CLN	CSL
10.372	-2.105	.60020	10.86710	2.01610	.34580	7.50000	5.85010	-5.00500	-.01420	-.00140	.01230
10.367	1.060	.59990	10.65570	2.02110	.34160	7.50000	5.84920	-4.98530	-.01450	.00040	.00840
10.367	5.691	.60070	10.34240	2.05170	.33240	7.50000	5.84990	-4.98100	-.00990	.00020	.00570
10.399	13.253	.60030	9.82060	2.08120	.32670	7.50000	5.84450	-4.98760	-.00640	.00010	.00340
10.411	28.268	.60010	8.78850	2.11400	.31800	7.50000	5.83790	-4.98730	-.00250	.00030	.00080
10.422	43.330	.59990	7.75290	2.12730	.31760	7.50000	5.82940	-4.98850	-.00080	-.00020	-.00090
10.423	48.502	.59940	7.39550	2.13120	.31640	7.50000	5.82760	-4.98840	-.00040	-.00020	-.00110
	GRADIENT	.00000	.00000	.00000	.00000	.00000	.00000	.00000	.00000	.00000	.00000

RUN NO. 680/ 0 RN/L = 3.28 GRADIENT INTERVAL = -1.00/ 4.00

ALPHAO	DZ	MACH	DX	DY	BETAO	PHI	ALPHAW	BETA	CY	CLN	CSL
14.684	.874	.60040	9.54560	1.96400	.89390	7.50000	5.87640	-4.96580	-.01640	-.00270	.00650
14.667	4.232	.60010	9.31860	1.98550	.88800	7.50000	5.87720	-4.96930	-.01390	-.00210	.00370
14.662	8.405	.60050	9.03360	2.01180	.88290	7.50000	5.87440	-4.98210	-.01040	-.00230	.00110
14.663	16.057	.60090	8.51080	2.03990	.87710	7.50000	5.86600	-4.99860	-.00710	-.00230	-.00130
14.668	30.959	.59980	7.48720	2.05970	.87070	7.50000	5.85230	-4.98160	-.00360	-.00250	-.00300
14.672	45.936	.59930	6.45680	2.06910	.86860	7.50000	5.84070	-4.98100	-.00290	-.00240	-.00350
14.683	61.178	.59910	5.39730	2.08060	.86400	7.50000	5.83590	-4.98820	-.00230	-.00160	-.00340
	GRADIENT	.00000	.00000	.00000	.00000	.00000	.00000	.00000	.00000	.00000	.00000

CA20 7471 01 S1 ORBITER DATA (CGN078) (20 JAN 75)

REFERENCE DATA

SREF = 2690.0000 SQ.FT. XMRP = 1109.0000 IN.XO
LREF = 474.8100 IN. YMRP = .0000 IN.YO
BREF = 936.6800 IN. ZMRP = 375.0000 IN.ZO
SCALE = .0300

PARAMETRIC DATA

ALPHAC = 8.000 BETAC = -5.000
ELV-IB = .000 ELV-OB = 3.000
ELEVON = 5.000 MACH = .600
BETAO = .000 PHI = 7.500
DX = .000 DY = .000

RUN NO. 701/ 0 RN/L = 3.22 GRADIENT INTERVAL = -1.00/ 4.00

ALPHAO	DZ	MACH	DX	DY	BETAO	PHI	ALPHAH	BETA	CY	CLN	CSL
10.301	-1.522	.59970	-.83310	1.08330	.39300	7.50000	9.69190	-5.04570	-.02530	-.00140	.01270
10.323	1.720	.59990	-1.27100	1.13320	.37340	7.50000	9.69140	-5.04180	-.01980	-.00060	.00970
10.358	6.033	.60060	-1.98180	1.18510	.35640	7.50000	9.69140	-5.04780	-.01370	-.00030	.00730
10.398	15.298	.59980	-3.12410	1.24460	.33730	7.50000	9.68470	-5.03900	-.00740	.00010	.00410
10.452	28.550	.60080	-4.95350	1.29230	.32740	7.50000	9.68130	-5.04800	-.00350	.00030	.00140
10.485	43.635	.59990	-7.04370	1.31350	.32720	7.50000	9.67630	-5.04730	-.00190	.00000	-.00030
10.490	47.136	.60050	-7.52840	1.31640	.32660	7.50000	9.67520	-5.03940	-.00150	.00000	-.00060
	GRADIENT	.00000	.00000	.00000	.00000	.00000	.00000	.00000	.00000	.00000	.00000

RUN NO. 698/ 0 RN/L = 3.31 GRADIENT INTERVAL = -1.00/ 4.00

ALPHAO	DZ	MACH	DX	DY	BETAO	PHI	ALPHAH	BETA	CY	CLN	CSL
14.639	1.551	.60080	-2.26150	1.07140	.92630	7.50000	9.67920	-5.05090	-.02910	-.00090	.00940
14.646	4.440	.59940	-2.65160	1.10830	.91390	7.50000	9.67710	-5.04860	-.02410	-.00090	.00760
14.662	9.007	.60060	-3.26780	1.14300	.90190	7.50000	9.67380	-5.02670	-.01940	-.00090	.00590
14.679	16.752	.60000	-4.31660	1.19170	.88790	7.50000	9.66390	-5.05080	-.01480	-.00050	.00370
14.701	31.550	.60040	-6.33690	1.23600	.87700	7.50000	9.64870	-5.03090	-.00940	-.00110	.00160
14.713	46.466	.60000	-8.39580	1.26140	.87320	7.50000	9.64450	-5.04770	-.00690	-.00120	-.00070
14.722	61.470	.60040	-10.46660	1.28150	.86640	7.50000	9.63820	-5.04710	-.00490	-.00080	-.00140
	GRADIENT	.00000	.00000	.00000	.00000	.00000	.00000	.00000	.00000	.00000	.00000

CA20 747/1 01 S1 ORBITER DATA (CGN0791) (20 JAN 75)

REFERENCE DATA

SREF =	2690.0000 SQ.FT.	XMRP =	1109.0000 IN.XO		
LREF =	474.8100 IN.	YMRP =	.0000 IN.YO		
BREF =	936.6800 IN.	ZMRP =	375.0000 IN.ZO		
SCALE =	.0300				

PARAMETRIC DATA

ALPHAC =	8.000	BETAC =	-5.000
ELV-IB =	.000	ELV-OB =	3.000
ELEVON =	5.000	MACH =	.600
BETAO =	.000	PHI =	7.500
DX =	10.000	DY =	.000

RUN NO. 682/ 0 RN/L = 3.27 GRADIENT INTERVAL = -1.00/ 4.00

ALPHAO	DZ	MACH	DX	DY	BETAO	PHI	ALPHAW	BETA	CY	CLN	CSL
10.182	-3.146	.59980	9.44330	1.93730	.37820	7.50000	9.72010	-4.99620	-.02410	-.00280	.01600
10.201	-.191	.60050	9.04330	1.97280	.36380	7.50000	9.72230	-4.99230	-.02110	-.00090	.01190
10.223	4.382	.60020	8.42140	2.02160	.34460	7.50000	9 72000	-4.98760	-.01490	-.00020	.00890
10.263	11.935	.60030	7.38169	2.06800	.32870	7.50000	9.71950	-4.97690	-.00900	.00010	.00620
10.337	26.849	.59930	5.31280	2.12680	.31790	7.50000	9.71460	-4.99590	-.00360	.00040	.00250
10.377	42.008	.60020	3.20820	2.14560	.31730	7.50000	9.70990	-4.98020	-.00140	-.00010	.00030
10.386	48.909	.60000	2.23740	2.15750	.31550	7.50000	9.71490	-4.98770	-.00050	-.00010	-.00040
	GRADIENT	.00000	.00000	.00000	.00000	.00000	.00000	.00000	.00000	.00000	.00000

RUN NO. 681/ 0 RN/L = 3.27 GRADIENT INTERVAL = -1.00/ 4.00

ALPHAO	DZ	MACH	DX	DY	BETAO	PHI	ALPHAW	BETA	CY	CLN	CSL
14.540	-.899	.60080	7.97090	1.87070	.91980	7.50000	9.74650	-4.97150	-.03190	-.00130	.01430
14.539	1.681	.60070	7.62670	1.90420	.90820	7.50000	9.74960	-4.96080	-.02730	-.00070	.01080
14.550	6.191	.59980	7.01630	1.94450	.89580	7.50000	9.74300	-4.94870	-.02120	-.00080	.00770
14.577	13.688	.60030	5.99450	2.00570	.88320	7.50000	9.73710	-4.98970	-.01530	-.00070	.00470
14.626	28.859	.60080	3.90510	2.06670	.86940	7.50000	9.72640	-4.99530	-.00860	-.00070	.00150
14.654	43.807	.60030	1.83050	2.08630	.86890	7.50000	9.72090	-4.98830	-.00630	-.00120	-.00020
14.668	58.633	.59980	-.23580	2.09830	.86650	7.50000	9.71490	-4.98000	-.00460	-.00150	-.00080
	GRADIENT	-.00004	-.13342	.01299	-.00450	.00000	.00120	.00415	.00178	.00023	-.00136

ORIGINAL PAGE IS
OF POOR QUALITY

CA20 747/1 01 SI ORBITER DATA (CGN080) (20 JAN 75)

REFERENCE DATA

SREF =	2690.0000 SQ.FT.	XMRP =	1109.0000 IN.XO
LREF =	474.8100 IN.	YMRP =	.0000 IN.YO
BREF =	936.6800 IN.	ZMRP =	375.0000 IN.ZO
SCALE =	.0300		

PARAMETRIC DATA

ALPHAC =	4.000	BETAC =	-5.000
ELV-IB =	.000	ELV-OB =	3.000
ELEVON =	5.000	MACH =	.600
BETAO =	.000	PHI =	7.500
DX =	.000	DY =	10.000

RUN NO. 791/ 0 RN/L = 3.34 GRADIENT INTERVAL = -1.00/ 4.00

ALPHAO	DZ	MACH	DX	DY	BETAO	PHI	ALPHAH	BETA	CY	CLN	CSL
10.543	.273	.59960	.69350	11.14360	.36720	7.50000	5.84270	-4.98690	-.01000	-.00140	-.00050
10.537	3.154	.59930	.49810	11.15020	.36560	7.50000	5.84120	-4.97990	-.00910	-.00150	-.00100
10.543	7.602	.60010	.19640	11.16160	.36070	7.50000	5.83540	-4.97360	-.00780	-.00130	-.00140
10.546	14.948	.59920	-.30580	11.18100	.35240	7.50000	5.83280	-4.98370	-.00630	-.00070	-.00150
10.563	30.456	.60020	-1.36340	11.21710	.33670	7.50000	5.82120	-4.98510	-.00290	.00010	-.00180
10.569	45.266	.59930	-2.39270	11.23800	.33050	7.50000	5.81720	-4.98950	-.00100	.00020	-.00210
10.573	47.765	.60090	-2.55600	11.24380	.32880	7.50000	5.81590	-4.99680	-.00060	.00030	-.00210
	GRADIENT	-.00010	-.06781	.00229	-.00056	.00000	-.00052	.00243	.00031	-.00003	-.00017

RUN NO. 792/ 0 RN/L = 3.33 GRADIENT INTERVAL = -1.00/ 4.00

ALPHAO	DZ	MACH	DX	DY	BETAO	PHI	ALPHAH	BETA	CY	CLN	CSL
14.693	2.086	.60000	-.37990	11.08210	.90280	7.50000	5.87000	-4.98910	-.02230	.00010	.00250
14.684	4.700	.60010	-.56200	11.09160	.90090	7.50000	5.87020	-4.98190	-.02010	-.00070	.00200
14.679	9.002	.60060	-.86020	11.10680	.89490	7.50000	5.86130	-4.96840	-.01670	-.00110	.00070
14.683	16.383	.60070	-1.37540	11.13310	.88490	7.50000	5.85650	-4.99530	-.01300	-.00110	-.00050
14.691	31.443	.59920	-2.41210	11.16780	.87000	7.50000	5.83990	-4.99270	-.00790	-.00090	-.00160
14.694	46.562	.59940	-3.45170	11.18970	.86380	7.50000	5.82940	-4.99250	-.00530	-.00100	-.00220
14.693	61.369	.59950	-4.47680	11.20770	.85570	7.50000	5.82430	-4.98120	-.00260	-.00100	-.00260
	GRADIENT	.00000	.00000	.00000	.00000	.00000	.00000	.00000	.00000	.00000	.00000

CA20 747/1 01 S1 ORBITER DATA (CGH081) (20 JAN 75)

REFERENCE DATA

SREF = 2690.0000 SQ.FT. XMRP = 1109.0000 IN.XO
LREF = 474.8100 IN. YMRP = .0000 IN.YO
BREF = 936.6800 IN. ZMRP = 375.0000 IN.ZO
SCALE = .0300

PARAMETRIC DATA

ALPHAC =	4.000	BETAC =	-5.000
ELV-IB =	.000	ELV-OB =	3.000
ELEVON =	5.000	MACH =	.600
BETAO =	.000	PHI =	7.500
DX =	10.000	DY =	10.000

RUN NO. 752/ 0 RN/L = 3.25 GRADIENT INTERVAL = -1.00/ 4.00

ALPHAO	DZ	MACH	DX	DY	BETAO	PHI	ALPHAW	BETA	CY	CLN	CSL
10.346	-1.602	.60090	10.84680	11.99480	.37830	7.50000	5.85440	-4.97960	-.01120	-.00140	.00120
10.345	1.482	.60060	10.63530	12.00080	.37550	7.50000	5.85620	-4.99010	-.01070	-.00140	.00040
10.354	5.906	.60020	10.33290	12.01730	.37080	7.50000	5.85220	-4.98920	-.00890	-.00130	-.00030
10.391	13.318	.60050	9.81780	12.03110	.36550	7.50000	5.84870	-4.98360	-.00710	-.00080	-.00100
10.403	28.645	.60020	8.76420	12.06720	.35160	7.50000	5.84180	-4.99350	-.00370	.00010	-.00160
10.412	43.525	.59940	7.73690	12.08630	.34460	7.50000	5.83600	-4.99070	-.00150	.00030	-.00210
10.415	47.221	.60020	7.48460	12.08790	.34240	7.50000	5.83250	-4.98240	-.00110	.00050	-.00210
	GRADIENT	.00000	.00000	.00000	.00000	.00000	.00000	.00000	.00000	.00000	.00000

RUN NO. 755/ 0 RN/L = 3.25 GRADIENT INTERVAL = -1.00/ 4.00

ALPHAO	DZ	MACH	DX	DY	BETAO	PHI	ALPHAW	BETA	CY	CLN	CSL
14.608	-.240	.60090	9.64110	11.90700	.82390	7.50000	5.87640	-4.97970	-.02440	.00080	.00320
14.598	2.722	.60030	9.43940	11.92140	.82500	7.50000	5.87630	-4.98890	-.02190	-.00060	.00270
14.593	7.480	.60030	9.11160	11.93390	.82030	7.50000	5.87390	-4.98370	-.01940	-.00100	.00250
14.598	14.602	.60090	8.62320	11.95990	.81230	7.50000	5.86660	-4.99540	-.01580	-.00100	.00110
14.613	29.687	.60000	7.57480	12.00060	.89630	7.50000	5.85700	-5.00190	-.00870	-.00090	-.00190
14.617	44.725	.59950	6.53810	12.02150	.88840	7.50000	5.84550	-4.99410	-.00580	-.00080	-.00250
14.621	59.760	.60020	5.50180	12.03780	.88140	7.50000	5.83640	-4.99030	-.00380	-.00050	-.00260
	GRADIENT	-.00020	-.06844	.00486	.00037	.00000	-.00003	-.00311	.00084	-.00047	-.00017

CA20 747/1 01 S1 ORBITER DATA (CON082) (20 JAN 75)

REFERENCE DATA

SREF = 2690.0000 SQ.FT. XMRP = 1109.0000 IN.XO
LREF = 474.8100 IN. YMRP = .0000 IN.YO
BREF = 936.6800 IN. ZMRP = 375.0000 IN.ZO
SCALE = .0300

PARAMETRIC DATA

ALPHAC = 8.000 BETAC = -5.000
ELV-IB = .000 ELV-OB = 3.000
ELEVON = 5.000 MACH = .600
BETAO = .000 PHI = 7.500
DX = .000 DY = 10.000

RUN NO. 798/ 0 RN/L = 3.28 GRADIENT INTERVAL = -1.00/ 4.00

ALPHAO	DZ	MACH	DX	DY	BETAO	PHI	ALPHAH	BETA	CY	CLN	CSL
10.341	-.270	.60070	-1.00870	11.14970	.35700	7.50000	9.65950	-4.98570	-.00540	-.00310	.00060
10.486	.652	.59920	-1.21140	11.14280	.37710	7.50000	9.65970	-4.98610	-.00540	-.00320	.00070
10.365	3.053	.59990	-1.45750	11.15070	.36160	7.50000	9.65670	-4.97910	-.00640	-.00310	-.00040
10.389	7.539	.59900	-2.06810	11.16310	.36060	7.50000	9.65760	-4.98830	-.00650	-.00280	-.00120
10.427	14.849	.60020	-3.06390	11.18630	.35350	7.50000	9.65440	-4.99010	-.00580	-.00180	-.00160
10.498	30.104	.59970	-5.16390	11.23050	.34070	7.50000	9.64830	-4.98980	-.00310	-.00060	-.00210
10.519	44.754	.60050	-7.17850	11.25610	.33340	7.50000	9.64570	-4.98770	-.00170	-.00020	-.00230
10.519	47.323	.60030	-7.52920	11.25990	.33110	7.50000	9.64270	-4.98730	-.00160	.00010	-.00230
	GRADIENT	-.00013	-.12851	.00090	-.00019	-.00000	-.00092	.00217	-.00032	.00001	-.00033

RUN NO. 797/ 0 RN/L = 3.29 GRADIENT INTERVAL = -1.00/ 4.00

ALPHAO	DZ	MACH	DX	DY	BETAO	PHI	ALPHAH	BETA	CY	CLN	CSL
14.589	1.523	.59940	-2.24660	11.09770	.90490	7.50000	9.69240	-4.98790	-.01600	-.00220	-.00180
14.598	4.729	.60080	-2.68170	11.10310	.90410	7.50000	9.68750	-4.99930	-.01610	-.00200	-.00180
14.608	8 739	.60080	-3.22950	11.10210	.90100	7.50000	9.68610	-4.97690	-.01750	-.00090	-.00070
14.637	16.314	.59980	-4.26990	11.12770	.89130	7.50000	9.67900	-4.99560	-.01560	-.00040	.00000
14.668	31.043	.59930	-6.28400	11.17200	.87570	7.50000	9.66570	-4.99090	-.01150	-.00010	.00040
14.687	46.253	.60030	-8.39190	11.20280	.86730	7.50000	9.65840	-4.98970	-.00840	-.00020	.00000
14.695	61.364	.60050	-10.46720	11.22990	.85990	7.50000	9.64990	-4.98740	-.00490	-.00050	-.00120
	GRADIENT	.00000	.00000	.00000	.00000	.00000	.00000	.00000	.00000	.00000	.00000

CA20 747/1 01 S1 ORBITER DATA (CGN083) (20 JAN 75)

REFERENCE DATA

SREF =	2690.0000 SQ.FT.	XMRP =	1109.0000 IN.XO		
LREF =	474.8100 IN.	YMRP =	.0000 IN.YO		
BREF =	936.6800 IN.	ZMRP =	375.0000 IN.ZO		
SCALE =	.0300				

PARAMETRIC DATA

ALPHAC =	8.000	BETAC =	-5.000
ELV-IB =	.000	ELV-OB =	3.000
ELEVON =	5.000	MACH =	.600
BETAO =	.000	PHI =	7.500
DX =	10.000	DY =	10.000

RUN NO. 753/ 0 RN/L = 3.25 GRADIENT INTERVAL = -1.00/ 4.00

ALPHAO	DZ	MACH	DX	DY	BETAO	PHI	ALPHAW	BETA	CY	CLN	CSL
10.157	-4.055	.59320	9.58440	12.02470	.35460	7.50000	9.72220	-4.97930	-.00260	-.00210	.00240
10.183	-1.077	.59910	9.17960	12.01420	.36780	7.50000	9.72250	-4.98720	-.00640	-.00240	.00130
10.217	3.434	.59910	8.65730	12.01330	.37270	7.50000	9.72190	-4.98040	-.00730	-.00260	.00030
10.253	10.824	.59950	7.53340	12.03380	.36920	7.50000	9.72090	-4.99020	-.00720	-.00200	-.00050
10.325	26.227	.60000	5.40650	12.07790	.35530	7.50000	9.71850	-4.99130	-.00410	-.00080	-.00160
10.368	40.888	.59980	3.36780	12.10570	.34880	7.50000	9.71180	-4.99700	-.00250	.00000	-.00210
10.380	47.654	.59990	2.42180	12.11250	.34450	7.50000	9.71230	-4.98090	-.00130	.00020	-.00230
	GRADIENT	.00000	.00000	.00000	.00000	.00000	.00000	.00000	.00000	.00000	.00000

RUN NO. 754/ 0 RN/L = 3.25 GRADIENT INTERVAL = -1.00/ 4.00

ALPHAO	DZ	MACH	DX	DY	BETAO	PHI	ALPHAW	BETA	CY	CLN	CSL
14.464	-1.083	.59930	8.03390	11.93300	.92370	7.50000	9.74720	-4.98020	-.01600	-.00250	-.00040
14.477	1.853	.59970	7.63200	11.94050	.92590	7.50000	9.74680	-4.99710	-.01660	-.00240	-.00080
14.493	6.128	.59980	7.04460	11.94340	.92410	7.50000	9.74430	-4.98480	-.01660	-.00210	-.00090
14.525	13.721	.60080	6.00510	11.96290	.91650	7.50000	9.73740	-4.98940	-.01600	-.00090	-.00140
14.575	28.934	.60020	3.90070	12.00290	.89970	7.50000	9.72870	-4.98460	-.01180	.00000	-.00090
14.596	44.022	.59940	1.80220	12.03180	.89130	7.50000	9.72270	-4.99150	-.00990	.00030	.00000
14.608	59.528	.60060	-.22260	12.06010	.88300	7.50000	9.71910	-4.99680	-.00540	.00010	-.00050
	GRADIENT	.00000	.00000	.00000	.00000	.00000	.00000	.00000	.00000	.00000	.00000

CA20 747/1 01 S1 ORBITER DATA (CGN084) (20 JAN 75)

REFERENCE DATA

SREF = 2690.0000 SQ.FT. XMRP = 1109.0000 IN.XO
LREF = 474.8100 IN. YMRP = .0000 IN.YO
BREF = 936.6800 IN. ZMRP = 375.0000 IN.ZO
SCALE = .0300

PARAMETRIC DATA

ALPHAC =	4.000	BETAC =	.000
ELV-IB =	.000	ELV-OB =	3.000
ELEVON =	5.000	MACH =	.600
BETAO =	.000	PHI =	7.500
DX =	.000	DY =	.000

RUN NO. 705/ 0 RN/L = 3.19 GRADIENT INTERVAL = -1.00/ 4.00

ALPHAO	DZ	MACH	DX	DY	BETAO	PHI	ALPHAW	BETA	CY	CLN	CSL
10.477	-.781	.59990	.78150	.11400	.33540	7.50000	5.94610	-.00740	-.00370	-.00130	.00068
10.470	1.431	.60020	.62900	.11610	.33470	7.50000	5.94350	-.00560	-.00400	-.00100	.00060
10.466	6.105	.59930	.30370	.12250	.33340	7.50000	5.93640	-.00330	-.00360	-.00090	.00030
10.472	13.569	.60000	-.21640	.13300	.33140	7.50000	5.92780	-.00960	-.00330	-.00060	.00000
10.485	28.308	.59960	-1.25130	.14890	.32590	7.50000	5.91880	-.00190	-.00220	-.00020	-.00070
10.489	43.532	.59950	-2.31820	.15620	.32600	7.50000	5.90960	-.00070	-.00180	-.00030	-.00150
10.490	47.201	.59940	-2.58010	.15820	.32490	7.50000	5.90960	-.00060	-.00180	-.00020	-.00160
	GRADIENT	.00014	-.06913	.00095	-.00032	.00000	-.00118	.00081	-.00014	.00014	-.00000

RUN NO. 704/ 0 RN/L = 3.19 GRADIENT INTERVAL = -1.00/ 4.00

ALPHAO	DZ	MACH	DX	DY	BETAO	PHI	ALPHAW	BETA	CY	CLN	CSL
15.435	6.448	.59970	-.69570	.16150	.97600	7.50000	5.86270	-.00920	-.00870	-.00240	-.00080
15.428	9.304	.59980	-.89700	.16320	.97380	7.50000	5.85980	-.01440	-.00870	-.00220	-.00060
15.423	12.875	.59960	-1.14210	.16420	.97360	7.50000	5.85340	-.01150	-.00870	-.00210	-.00070
15.412	20.640	.59920	-1.67000	.17050	.96990	7.50000	5.83730	-.00340	-.00800	-.00180	-.00100
15.415	36.108	.60000	-2.72220	.18780	.96590	7.50000	5.81930	-.00920	-.00660	-.00160	-.00170
15.414	50.653	.59970	-3.71920	.19180	.96360	7.50000	5.80820	-.00090	-.00610	-.00140	-.00190
14.600	60.670	.60080	-4.54030	.20570	.64990	7.50000	5.91280	.00730	-.00450	-.00110	-.00210
15.413	65.386	.59960	-4.73040	.20630	.95590	7.50000	5.80070	-.00040	-.00450	-.00090	-.00230
	GRADIENT	.00000	.00000	.00000	.00000	.00000	.00000	.00000	.00000	.00000	.00000

CA20 747/1 01 SI ORBITER DATA (CGH085) (20 JAN 75)

REFERENCE DATA

SREF = 2690.0000 SQ.FT. XMRP = 1109.0000 IN.XO
LREF = 474.8100 IN. YMRP = .0000 IN.YO
BREF = 936.6900 IN. ZMRP = 375.0000 IN.ZO
SCALE = .0300

PARAMETRIC DATA

ALPHAC = 4.000 BETAC = .000
ELV-IB = .000 ELV-OB = 3.000
ELEVON = 5.000 MACH = .600
BETAO = .000 PHI = 7.500
DX = 10.000 DY = .000

RUN NO. 685/ 0 RN/L = 3.25 GRADIENT INTERVAL = -1.00/ 4.00

ALPHAO	DZ	MACH	DX	DY	BETAO	PHI	ALPHAW	BETA	CY	CLN	CSL
10.398	-1.550	.59990	10.83680	.08910	.32620	7.50000	5.86960	.00820	-.00300	-.00100	.00130
10.393	1.373	.59990	10.63990	.09070	.32610	7.50000	5.85280	.00650	-.00360	-.00080	.00120
10.391	5.899	.59950	10.33220	.09770	.32520	7.50000	5.86370	.01110	-.00320	-.00070	.00060
10.388	13.274	.59930	9.82720	.10370	.32480	7.50000	5.85710	.01310	-.00330	-.00050	.00040
10.407	28.273	.59950	8.79640	.11890	.31960	7.50000	5.84670	.02070	-.00200	-.00010	-.00040
10.420	43.578	.60000	7.73890	.13010	.31980	7.50000	5.83970	.01420	-.00150	-.00020	-.00130
10.422	48.458	.59940	7.40080	.13490	.31810	7.50000	5.83900	.01410	-.00090	-.00020	-.00170
	GRADIENT	.00000	.00000	.00000	.00000	.00000	.00000	.00000	.00000	.00000	.00000

RUN NO. 695/ 0 RN/L = 3.25 GRADIENT INTERVAL = -1.00/ 4.00

ALPHAO	DZ	MACH	DX	DY	BETAO	PHI	ALPHAW	BETA	CY	CLN	CSL
14.697	1.100	.59940	9.54250	.13260	.87920	7.50000	5.89750	-.00300	-.00810	-.00220	-.00020
14.684	4.360	.60080	9.32210	.13590	.87860	7.50000	5.89530	-.00170	-.00840	-.00190	-.00020
14.678	8.649	.60060	9.02890	.13720	.87880	7.50000	5.88960	.01030	-.00800	-.00210	-.00050
14.673	16.181	.59930	8.51060	.15310	.87710	7.50000	5.87810	.00470	-.00590	-.00240	-.00230
14.676	31.096	.60050	7.48510	.17240	.87330	7.50000	5.86330	.00570	-.00340	-.00260	-.00370
14.684	46.169	.60080	6.44000	.16710	.87350	7.50000	5.85290	.01390	-.00470	-.00210	-.00310
14.695	61.197	.59990	5.39690	.18170	.86570	7.50000	5.84650	.01430	-.00290	-.00150	-.00350
	GRADIENT	.00000	.00000	.00000	.00000	.00000	.00000	.00000	.00000	.00000	.00000

ORIGINAL PAGE IS
OF POOR QUALITY

CA20 747/1 01 SI ORBITER DATA (CGN086) (20 JAN 75)

REFERENCE DATA

SREF =	2690.0000 SQ.FT.	XMRP =	1109.0000 IN.XO
LREF =	474.8100 IN.	YMRP =	.0000 IN.YO
BREF =	936.6800 IN.	ZMRP =	375.0000 IN.ZO
SCALE =	.0300		

PARAMETRIC DATA

ALPHAC =	8.000	BETAC =	.000
ELV-IB =	.000	ELV-OB =	3.000
ELEVON =	5.000	MACH =	.600
BETAO =	.000	PHI =	7.500
DX =	.000	DY =	.000

RUN NO. 702/ 0 RN/L = 3.21 GRADIENT INTERVAL = -1.00/ 4.00

ALPHAO	DZ	MACH	DX	DY	BETAO	PHI	ALPHAW	BETA	CY	CLN	CSL
10.331	-1.338	.59930	-.84120	.06700	.33000	7.50000	9.69480	-.00030	-.00380	-.00050	.00380
10.340	1.740	.60000	-1.25560	.07150	.33130	7.50000	9.69390	-.00040	-.00440	-.00040	.00340
10.363	6.289	.60070	-1.87580	.08170	.33280	7.50000	9.68910	-.00010	-.00410	-.00060	.00280
10.396	13.806	.60030	-2.90490	.09630	.33230	7.50000	9.68730	.00010	-.00410	-.00040	.00190
10.462	28.633	.60060	-4.95180	.12610	.32950	7.50000	9.68090	.00860	-.00240	-.00020	.00030
10.485	43.486	.60040	-7.00390	.14140	.33000	7.50000	9.67620	.00150	-.00200	-.00030	-.00070
10.489	47.098	.59950	-7.50170	.14340	.32810	7.50000	9.67300	.00920	-.00170	-.00010	-.00100
	GRADIENT	.00000	.00000	.00000	.00000	.00000	.00000	.00000	.00000	.00000	.00000

RUN NO. 703/ 0 RN/L = 3.20 GRADIENT INTERVAL = -1.00/ 4.00

ALPHAO	DZ	MACH	DX	DY	BETAO	PHI	ALPHAW	BETA	CY	CLN	CSL
14.513	1.005	.60000	-2.17580	.11060	.86690	7.50000	9.72400	-.01250	-.01130	-.00130	.00290
14.522	4.003	.59980	-2.58520	.11270	.86730	7.50000	9.71980	-.00330	-.01140	-.00110	.00260
14.535	8.390	.60090	-3.18350	.12190	.86560	7.50000	9.71600	-.00140	-.01110	-.00090	.00220
14.550	15.842	.59970	-4.20120	.13390	.86250	7.50000	9.70760	-.00040	-.01120	-.00040	.00230
15.384	35.410	.59990	-6.93850	.15790	.96430	7.50000	9.69510	.00020	-.00960	-.00060	.00200
15.397	50.740	.60030	-9.05870	.17100	.96420	7.50000	9.68670	.00140	-.00840	-.00100	.00080
15.398	65.244	.60010	-11.07430	.19330	.95630	7.50000	9.68350	.00140	-.00570	-.00070	-.00060
	GRADIENT	.00000	.00000	.00000	.00000	.00000	.00000	.00000	.00000	.00000	.00000

CA20 747/1 01 S1 ORBITER DATA (CON087) (23 JAN 75)

REFERENCE DATA

SREF =	2890.0000 SQ.FT.	XMRP =	1109.0000 IN.XO		
LREF =	474.8100 IN.	YMRP =	.0000 IN.YO		
BREF =	936.6800 IN.	ZMRP =	375.0000 IN.ZO		
SCALE =	.0380				

PARAMETRIC DATA

ALPHAC =	8.000	BETAC =	.000
ELV-IB =	.000	ELV-OB =	3.000
ELEVON =	5.000	MACH =	.600
BETAO =	.000	PHI =	7.500
DX =	10.000	DY =	.000

RUN NO. 683/ 0 RN/L = 3.27 GRADIENT INTERVAL = -1.00/ 4.00

ALPHAO	DZ	MACH	DX	DY	BETAO	PHI	ALPHAW	BETA	CY	CLN	CSL
10.202	-2.846	.60070	8.42630	.05380	.30970	7.50000	9.72550	.00720	-.00240	.00060	.00430
10.212	.552	.60020	8.96280	.05120	.31500	7.50000	9.72650	.01490	-.00370	.00030	.00400
10.232	4.877	.60020	8.36890	.05670	.31740	7.50000	9.72560	.01510	-.00400	.00020	.00350
10.267	12.472	.59990	7.32440	.07370	.31830	7.50000	9.72090	.00760	-.00360	.00000	.00260
10.343	27.592	.59930	5.22440	.09540	.31840	7.50000	9.71640	.02330	-.00230	.00010	.00110
10.377	42.540	.60030	3.14850	.11600	.31820	7.50000	9.71420	.01650	-.00120	-.00030	-.00040
10.387	48.934	.60050	2.25810	.12250	.31670	7.50000	9.71250	.01650	-.00080	-.00010	-.00090
	GRADIENT	.00000	.00000	.00000	.00000	.00000	.00000	.00000	.00000	.00000	.00000

RUN NO. 684/ 0 RN/L = 3.26 GRADIENT INTERVAL = -1.00/ 4.00

ALPHAO	DZ	MACH	DX	DY	BETAO	PHI	ALPHAW	BETA	CY	CLN	CSL
14.557	-1.221	.59970	8.03810	.07550	.87510	7.50000	9.75080	.00290	-.01070	-.00120	.00440
14.553	1.801	.59960	7.63010	.08390	.87580	7.50000	9.75280	.00360	-.01070	-.00100	.00360
14.564	6.393	.59920	7.00370	.08780	.87610	7.50000	9.74630	.01280	-.01080	-.00090	.00280
14.590	13.985	.59980	5.96410	.10350	.87480	7.50000	9.74190	.01410	-.01020	-.00070	.00180
14.632	28.717	.60040	3.93720	.13370	.87070	7.50000	9.73190	.01500	-.00780	-.00080	.00050
14.655	43.772	.59920	1.84850	.14770	.87100	7.50000	9.72470	.01620	-.00670	-.00130	-.00050
14.654	48.457	.59900	1.19860	.14870	.86940	7.50000	9.72120	.02410	-.00620	-.00130	-.00070
14.666	53.011	.59990	.56350	.15680	.86900	7.50000	9.72150	.01640	-.00590	-.00130	-.00070
	GRADIENT	.00000	.00000	.00000	.00000	.00000	.00000	.00000	.00000	.00000	.00000

CA20 7471 01 SI ORBITER DATA (CGH0881 (20 JAN 75)

REFERENCE DATA

SREF = 2690.0000 SQ.FT. XMRP = 1109.0000 IN.XO
LREF = 474.8100 IN. YMRP = .0000 IN.YO
BREF = 936.6800 IN. ZMRP = 375.0000 IN.ZO
SCALE = .0300

PARAMETRIC DATA

ALPHAC =	4.000	BETAC =	.000
ELV-IB =	.000	ELV-OB =	3.000
ELEVON =	5.000	MACH =	.600
BETAO =	.000	PHI =	7.500
DX =	.000	DY =	10.000

RUN NO. 790/ 0 RN/L = 3.35 GRADIENT INTERVAL = -1.00/ 4.00

ALPHAO	DZ	MACH	DX	DY	BETAO	PHI	ALPHAH	BETA	CY	CLN	CSL
10.555	.254	.60080	.71130	10.12070	.35260	7.50000	5.84990	.00050	-.00120	-.00270	-.00570
10.549	3.398	.59950	.49520	10.11910	.35390	7.50000	5.84950	-.00680	-.00230	-.00250	-.00490
10.551	7.733	.60010	.20180	10.11940	.35340	7.50000	5.84070	.00080	-.00260	-.00230	-.00430
10.556	15.401	.60060	-.31960	10.12750	.35020	7.50000	5.83350	-.00960	-.00320	-.00160	-.00340
10.567	30.165	.60090	-1.32890	10.14530	.33860	7.50000	5.82300	.00410	-.00200	-.00040	-.00280
10.572	45.458	.59920	-2.38060	10.15660	.33400	7.50000	5.81600	.00450	-.00130	-.00010	-.00250
10.573	47.767	.59990	-2.54180	10.16140	.33220	7.50000	5.81730	-.00320	-.00120	.00010	-.00250
	GRADIENT	-.00041	-.05873	-.00051	.00041	.00000	-.00013	-.00232	-.00035	.00006	.00025

RUN NO. 793/ 0 RN/L = 3.32 GRADIENT INTERVAL = -1.00/ 4.00

ALPHAO	DZ	MACH	DX	DY	BETAO	PHI	ALPHAH	BETA	CY	CLN	CSL
14.705	1.985	.60000	-.34990	10.14030	.88850	7.50000	5.86510	-.00700	-.01410	-.00070	-.00180
14.705	4.790	.59970	-.54980	10.14100	.88850	7.50000	5.86030	-.00760	-.01320	-.00130	-.00120
14.694	8.916	.59960	-.83550	10.14240	.88720	7.50000	5.85670	-.00950	-.01310	-.00140	-.00050
14.687	16.371	.59920	-1.34730	10.15560	.88140	7.50000	5.84520	-.00660	-.01090	-.00150	-.00110
14.692	31.267	.60010	-2.36750	10.18500	.87110	7.50000	5.82820	-.01420	-.00720	-.00140	-.00230
14.697	46.547	.59960	-3.41780	10.19610	.86680	7.50000	5.81760	-.01260	-.00590	-.00120	-.00230
14.696	61.277	.59940	-4.42800	10.21030	.85990	7.50000	5.80770	-.00330	-.00380	-.00110	-.00270
	GRADIENT	.00000	.00000	.00000	.00000	.00000	.00000	.00000	.00000	.00000	.00000

CA20 747/1 01 S1 ORBITER DATA (CON089) (20 JAN 75)

REFERENCE DATA

SREF =	2690.0000 SQ.FT.	XMRP =	1109.0000 IN.XO
LREF =	474.8100 IN.	YMRP =	.0000 IN.YO
BREF =	936.6800 IN.	ZMRP =	375.0000 IN.ZO
SCALE =	.0300		

PARAMETRIC DATA

ALPHAC =	4.000	BETAC =	.000
ELV-IB =	.000	ELV-OB =	3.000
ELEVON =	5.000	MACH =	.600
BETAO =	.000	PHI =	7.500
DX =	10.000	DY =	10.000

RUN NO. 748/ 0 RN/L = 3.31 GRADIENT INTERVAL = -1.00/ 4.00

ALPHAO	DZ	MACH	DX	DY	BETAO	PHI	ALPHAW	BETA	CY	CLN	CSL
10.378	-1.632	.60020	10.85360	10.09140	.36670	7.50000	5.85880	.00020	-.00310	-.00220	-.00490
10.387	1.664	.60010	10.62560	10.08940	.36940	7.50000	5.85350	.00820	-.00340	-.00240	-.00420
10.394	6.264	.60010	10.30650	10.09400	.37000	7.50000	5.85260	.00070	-.00390	-.00230	-.00380
10.402	13.375	.60060	9.82330	10.10030	.36640	7.50000	5.84730	-.00140	-.00430	-.00160	-.00320
10.423	28.632	.60090	8.77710	10.11670	.35660	7.50000	5.83630	.00390	-.00320	-.00050	-.00270
10.434	43.683	.60070	7.73850	10.12950	.34900	7.50000	5.82970	.01160	-.00170	.00010	-.00260
10.431	47.364	.60030	7.48270	10.13340	.34760	7.50000	5.83090	.01190	-.00120	.00010	-.00260
	GRADIENT	.00000	.00000	.00000	.00000	.00000	.00000	.00000	.00000	.00000	.00000

RUN NO. 751/ 0 RN/L = 3.25 GRADIENT INTERVAL = -1.00/ 4.00

ALPHAO	DZ	MACH	DX	DY	BETAO	PHI	ALPHAW	BETA	CY	CLN	CSL
14.603	-.240	.59960	9.65580	10.10520	.91100	7.50000	5.88620	.00130	-.01510	-.00020	-.00340
14.595	2.648	.59970	9.45510	10.10780	.91230	7.50000	5.88670	.00110	-.01440	-.00110	-.00210
14.596	7.191	.59940	9.14070	10.11050	.91150	7.50000	5.88310	-.00120	-.01410	-.00120	-.00150
14.595	14.612	.59970	8.63500	10.12720	.90760	7.50000	5.87400	-.01480	-.01270	-.00140	-.00110
14.603	29.756	.59940	7.58700	10.15000	.89650	7.50000	5.85730	.00120	-.00780	-.00150	-.00300
14.611	44.626	.59900	6.55800	10.17050	.89130	7.50000	5.84810	-.00560	-.00510	-.00160	-.00370
14.611	59.694	.59980	5.51570	10.18640	.88330	7.50000	5.83980	-.00370	-.00290	-.00130	-.00360
	GRADIENT	.00003	-.06948	.00080	.00045	-.00000	.00017	-.00007	.00024	-.00031	.00045

CA20 747/1 01 SI ORBITER DATA (CGN090) (20 JAN 75)

REFERENCE DATA

SREF =	2690.0000 SQ.FT.	XMRP =	1109.0000 IN.XO
LREF =	474.8100 IN.	YMRP =	.0000 IN.YO
BREF =	936.6800 IN.	ZMRP =	375.0000 IN.ZO
SCALE =	.0300		

PARAMETRIC DATA

ALPHAC =	8.000	BETAC =	.000
ELV-1B =	.000	ELV-0B =	3.000
ELEVON =	5.000	MACH =	.600
BETAO =	.000	PHI =	7.500
DX =	.000	DY =	10.000

RUN NO. 799/ 0 RN/L = 3.28 GRADIENT INTERVAL = -1.00/ 4.00

ALPHAO	DZ	MACH	DX	DY	BETAO	PHI	ALPHAW	BETA	CY	CLN	CSL
10.357	-.035	.60030	-1.02460	10.11350	.32780	7.50000	9.66040	.01350	.00650	-.00330	-.00600
10.375	3.161	.59960	-1.45630	10.10060	.33960	7.50000	9.65910	.00480	.00300	-.00340	-.00510
10.396	7.497	.60020	-2.04560	10.09530	.34380	7.50000	9.65930	.00230	.00040	-.00300	-.00440
10.435	14.798	.60070	-3.04220	10.09780	.34630	7.50000	9.65560	.00100	-.00170	-.00240	-.00360
10.494	29.812	.59910	-5.10530	10.11650	.34030	7.50000	9.64940	.01370	-.00240	-.00090	-.00280
10.518	45.359	.59950	-7.24650	10.13900	.33420	7.50000	9.64690	.00730	-.00170	-.00030	-.00270
10.522	47.338	.60020	-7.51750	10.14290	.33230	7.50000	9.64400	.00760	-.00130	-.00020	-.00260
	GRADIENT	-.00022	-.13509	-.00404	.00338	.00000	-.00041	-.00272	-.00110	-.00003	.00028

RUN NO. 796/ 0 RN/L = 3.29 GRADIENT INTERVAL = -1.00/ 4.00

ALPHAO	DZ	MACH	DX	DY	BETAO	PHI	ALPHAW	BETA	CY	CLN	CSL
14.594	1.481	.59950	-2.22770	10.14370	.87480	7.50000	9.69560	-.00300	-.00530	-.00170	-.00610
14.602	4.549	.59900	-2.64420	10.13000	.88110	7.50000	9.69070	-.00590	-.00850	-.00150	-.00430
14.617	8.657	.59930	-3.20750	10.11860	.88520	7.50000	9.68790	-.00250	-.01110	-.00110	-.00280
14.642	16.518	.59980	-4.27940	10.12340	.88400	7.50000	9.67930	.00160	-.01210	-.00060	-.00160
14.671	31.266	.59980	-6.30190	10.14970	.87470	7.50000	9.66690	-.00270	-.01070	-.00030	.00000
14.687	46.167	.60010	-8.35180	10.17100	.86660	7.50000	9.65650	-.00210	-.00880	-.00020	.00000
14.696	61.030	.60020	-10.40650	10.19280	.86220	7.50000	9.65050	.00750	-.00550	-.00050	-.00110
	GRADIENT	.00000	.00000	.00000	.00000	.00000	.00000	.00000	.00000	.00000	.00000

DATE 01 DEC 75 TABULATED SOURCE DATA - CA20

CA20 747/1 01 S1 ORBITER DATA (CGN091) (20 JAN 75)

REFERENCE DATA

SREF = 2690.0000 SQ.FT. XMRP = 1109.0000 IN.XO
LREF = 474.8100 IN. YMRP = .0000 IN.YO
BREF = 936.6800 IN. ZMRP = 375.0000 IN.ZO
SCALE = .0300

PARAMETRIC DATA

ALPHAC =	8.000	BETAC =	.000
ELV-IB =	.000	ELV-OB =	3.000
ELEVON =	5.000	MACH =	.600
BETAO =	.000	PHI =	7.500
DX =	10.000	DY =	10.000

RUN NO. 749/ 0 RN/L = 3.28 GRADIENT INTERVAL = -1.00/ 4.00

ALPHAO	DZ	MACH	DX	DY	BETAO	PHI	ALPHAW	BETA	CY	CLN	CSL
10.211	-2.473	.60010	9.37070	10.09490	.34320	7.50000	9.73370	.00410	.00580	-.00240	-.00560
10.231	.684	.59940	8.93780	10.08320	.35240	7.50000	9.73220	.00470	.00280	-.00270	-.00460
10.254	5.170	.59950	8.32140	10.07530	.36020	7.50000	9.73090	.00260	-.00020	-.00280	-.00380
10.264	12.734	.59930	7.28040	10.07600	.36200	7.50000	9.72830	.00110	-.00260	-.00210	-.00320
10.350	27.679	.59950	5.20360	10.09700	.35550	7.50000	9.72610	.00560	-.00240	-.00080	-.00260
10.390	42.827	.59370	3.09470	10.11470	.35150	7.50000	9.71980	.00660	-.00190	-.00020	-.00260
10.396	47.827	.60050	2.39640	10.12240	.34930	7.50000	9.72100	.00690	-.00120	.00000	-.00260
	GRADIENT	.00000	.00000	.00000	.00000	.00000	.00000	.00000	.00000	.00000	.00000

RUN NO. 750/ 0 RN/L = 3.26 GRADIENT INTERVAL = -1.00/ 4.00

ALPHAO	DZ	MACH	DX	DY	BETAO	PHI	ALPHAW	BETA	CY	CLN	CSL
14.458	-1.845	.59970	8.15120	10.11780	.89550	7.50000	9.75910	.00240	-.00370	-.00210	-.00740
14.469	1.617	.59960	7.67690	10.10740	.90290	7.50000	9.75870	.00250	-.00650	-.00240	-.00590
14.487	6.361	.60050	7.02750	10.09550	.90780	7.50000	9.75520	.01360	-.00930	-.00210	-.00440
14.517	13.973	.60060	5.97980	10.09910	.90650	7.50000	9.74700	.00160	-.01150	-.00110	-.00360
14.559	28.740	.60010	3.93560	10.12300	.89680	7.50000	9.73940	.00370	-.01060	-.00020	-.00150
14.582	41.006	.59970	2.22730	10.13620	.89270	7.50000	9.73390	-.00330	-.01020	.00010	-.00050
14.586	42.477	.60050	2.02840	10.13900	.89110	7.50000	9.72820	-.00310	-.01000	.00020	-.00030
14.595	58.866	.59920	-.26060	10.16340	.88240	7.50000	9.72500	-.00120	-.00690	.00020	-.00020
	GRADIENT	.00000	.00000	.00000	.00000	.00000	.00000	.00000	.00000	.00000	.00000

CA20 747/1 01 SI ORBITER DATA (CGH092) (20 JAN 75)

REFERENCE DATA

SREF =	2690.0000 SQ.FT.	XMRP =	1109.0000 IN.XO		
LREF =	474.8100 IN.	YMRP =	.0000 IN.YO		
BREF =	936.6800 IN.	ZMRP =	375.0000 IN.ZO		
SCALE =	.0300				

PARAMETRIC DATA

ALPHAC =	4.000	BETAC =	5.000
ELV-IB =	.000	ELV-OB =	3.000
ELEVON =	5.000	MACH =	.600
BETAO =	.000	PHI =	7.500
DX =	.000	DY =	10.000

RUN NO. 789/ 0 RN/L = 3.37 GRADIENT INTERVAL = -1.00/ 4.00

ALPHAO	DZ	MACH	DX	DY	BETAO	PHI	ALPHAW	BETA	CY	CLN	CSL
10.577	-.150	.59980	.72100	8.96510	.36680	7.50000	5.84990	.98850	.00050	-.00470	-.01280
10.565	3.389	.60030	.48160	8.96960	.36070	7.50000	5.84670	.98640	-.00040	-.00380	-.00950
10.564	7.766	.60060	.18390	8.97340	.35770	7.50000	5.83930	4.98560	-.00080	-.00330	-.00760
10.561	15.573	.59950	-.34810	8.97980	.35300	7.50000	5.83440	4.98720	-.00220	-.00230	-.00550
10.569	30.037	.59900	-1.33700	8.99030	.34320	7.50000	5.82300	4.97980	-.00210	-.00090	-.00380
10.574	45.241	.60010	-2.37860	9.00170	.33720	7.50000	5.81630	4.99170	-.00180	-.00030	-.00300
10.574	47.768	.59970	-2.55580	9.00290	.33650	7.50000	5.81790	4.98180	-.00170	-.00020	-.00300
	GRADIENT	.00014	-.06764	.00127	-.00172	-.00000	-.00090	-.00059	-.00025	.00025	.00093

RUN NO. 794/ 0 RN/L = 3.31 GRADIENT INTERVAL = -1.00/ 4.00

ALPHAO	DZ	MACH	DX	DY	BETAO	PHI	ALPHAW	BETA	CY	CLN	CSL
14.741	1.968	.59930	-.37430	9.07530	.89280	7.50000	5.86070	5.00420	-.01040	-.00150	-.00910
14.723	4.532	.59980	-.55020	9.07210	.89060	7.50000	5.85950	5.00880	-.01130	-.00150	-.00600
14.712	8.966	.60060	-.85330	9.07150	.88960	7.50000	5.85570	5.01510	-.01180	-.00170	-.00340
14.701	16.604	.59970	-1.37350	9.08220	.88480	7.50000	5.84130	5.00370	-.01110	-.00170	-.00180
14.695	31.346	.60060	-2.38170	9.10610	.87490	7.50000	5.82510	5.00290	-.00790	-.00160	-.00270
14.699	46.685	.59970	-3.43760	9.11960	.86940	7.50000	5.81480	4.99540	-.00650	-.00130	-.00260
14.698	61.405	.60010	-4.45100	9.13090	.86330	7.50000	5.80750	5.00490	-.00480	-.00110	-.00250
	GRADIENT	.00000	.00000	.00000	.00000	.00000	.00000	.00000	.00000	.00000	.00000

ORIGINAL PAGE IS
OF POOR QUALITY

CA20 747/1 01 S1 ORBITER DATA (CON093) (20 JAN 75)

REFERENCE DATA

SREF =	2690.0000 SQ.FT.	XMRP =	1109.0000 IN.XO		
LREF =	474.8100 IN.	YMRP =	.0000 IN.YO		
BREF =	936.6800 IN.	ZMRP =	375.0000 IN.ZO		
SCALE =	.0300				

PARAMETRIC DATA

ALPHAC =	4.000	BETAC =	5.000
ELV-IB =	.000	ELV-OB =	3.000
ELEVON =	5.000	MACH =	.600
BETAO =	.000	PHI =	7.500
DX =	10.000	DY =	10.000

RUN NO. 756/ 0 RN/L = 3.27 GRADIENT INTERVAL = -1.00/ 4.00

ALPHAO	DZ	MACH	DX	DY	BETAO	PHI	ALPHAW	BETA	CY	CLN	CSL
10.407	-1.572	.60030	10.83100	8.07640	.37780	7.50000	5.85840	4.98230	.00010	-.00430	-.01270
10.397	1.296	.60000	10.63680	8.07760	.37490	7.50000	5.85760	4.98060	-.00090	-.00370	-.01020
10.396	5.872	.60080	10.32570	8.08270	.37180	7.50000	5.85460	4.97180	-.00210	-.00300	-.00790
10.403	13.650	.60030	9.79170	8.08480	.36790	7.50000	5.85130	4.96920	-.00350	-.00200	-.00560
10.415	28.531	.59970	8.76850	8.09390	.35840	7.50000	5.84310	4.97316	-.00360	-.00060	-.00370
10.423	43.642	.60020	7.72630	8.10690	.35200	7.50000	5.83760	4.97480	-.00260	-.00010	-.00320
10.426	47.246	.60080	7.47400	8.11120	.34990	7.50000	5.83850	4.97490	-.00210	.00000	-.00310
	GRADIENT	.00000	.00000	.00000	.00000	.00000	.00000	.00000	.00000	.00000	.00000

RUN NO. 759/ 0 RN/L = 3.24 GRADIENT INTERVAL = -1.00/ 4.00

ALPHAO	DZ	MACH	DX	DY	BETAO	PHI	ALPHAW	BETA	CY	CLN	CSL
14.648	-.347	.60040	9.63370	8.18350	.91470	7.50000	5.88520	4.98300	-.01230	-.00010	-.01100
14.628	2.762	.60080	9.42610	8.18750	.91280	7.50000	5.87930	4.97890	-.01240	-.00070	-.00720
14.615	7.144	.59940	9.12810	8.18710	.91230	7.50000	5.87670	4.97800	-.01350	-.00080	-.00430
14.606	14.929	.59920	8.60060	8.19200	.90870	7.50000	5.86460	4.97460	-.01410	-.00060	-.00150
14.610	29.445	.59910	7.60310	8.22120	.90000	7.50000	5.85130	4.96530	-.01010	-.00100	-.00180
14.615	44.674	.59940	6.55210	8.23570	.89450	7.50000	5.83930	4.96520	-.00790	-.00090	-.00260
14.618	59.607	.59920	5.51130	8.25220	.88490	7.50000	5.83790	4.97470	-.00490	-.00060	-.00290
	GRADIENT	.00013	-.06677	.00129	-.00061	.00000	-.00190	-.00132	-.00003	-.00019	.00122

CA20 747/1 01 SI ORBITER DATA (CGN094) (20 JAN 75)

REFERENCE DATA

SREF = 2690.0000 SQ.FT. XMRP = 1109.0000 IN.XO
LREF = 474.8100 IN. YMRP = .0000 IN.YO
BREF = 936.6800 IN. ZMRP = 375.0000 IN.ZO
SCALE = .0300

PARAMETRIC DATA

ALPHAC =	8.000	BETAC =	5.000
ELV-IB =	.000	ELV-OB =	3.000
ELEVON =	5.000	MACH =	.600
BETAO =	.000	PHI =	7.500
DX =	.000	DY =	10.000

RUN NO. 800/ 0 RN/L = 3.28 GRADIENT INTERVAL = -1.00/ 4.00

ALPHAO	DZ	MACH	DX	DY	BETAO	PHI	ALPHAW	BETA	CY	CLN	CSL
10.383	-.121	.59930	-1.02330	8.91870	.34720	7.50000	9.65660	4.99450	.00690	-.00550	-.01330
10.394	3.280	.59930	-1.48700	8.91930	.34590	7.50000	9.65730	4.99140	.00510	-.00490	-.01020
10.408	7.350	.60060	-2.03700	8.91600	.34470	7.50000	9.65340	5.00470	.00330	-.00410	-.00800
10.448	15.415	.59950	-3.14280	8.91490	.34670	7.50000	9.65240	4.99410	-.00030	-.00280	-.00550
10.505	30.092	.60000	-5.16010	8.92880	.34150	7.50000	9.64660	5.00160	-.00170	-.00120	-.00370
10.523	45.305	.59990	-7.25270	8.94660	.33540	7.50000	9.64150	4.98740	-.00170	-.00060	-.00310
10.526	47.357	.60070	-7.53260	8.94780	.33480	7.50000	9.63840	4.99510	-.00150	-.00040	-.00290
	GRADIENT	.00000	-.13632	.00018	-.00038	.00000	.00021	-.00091	-.00053	.00018	.00091

RUN NO. 795/ 0 RN/L = 3.30 GRADIENT INTERVAL = -1.00/ 4.00

ALPHAO	DZ	MACH	DX	DY	BETAO	PHI	ALPHAW	BETA	CY	CLN	CSL
14.609	1.223	.59980	-2.21010	9.06050	.87620	7.50000	9.69330	4.97390	-.00090	-.00290	-.01250
14.604	4.295	.60010	-2.62530	9.04320	.87780	7.50000	9.69930	4.98640	-.00490	-.00210	-.00840
14.610	9.099	.60030	-3.27870	9.02810	.88110	7.50000	9.69390	4.99180	-.00880	-.00140	-.00500
14.633	16.424	.59900	-4.27940	9.03250	.88090	7.50000	9.67580	4.98360	-.00990	-.00100	-.00370
14.673	31.163	.60010	-6.30030	9.04260	.87580	7.50000	9.66440	4.99120	-.01070	-.00040	-.00040
14.686	46.448	.59990	-8.40360	9.06230	.87040	7.50000	9.65340	4.97790	-.00940	-.00030	-.00010
14.698	61.101	.60050	-10.43360	9.08130	.86590	7.50000	9.64950	4.98690	-.00630	-.00070	-.00140
	GRADIENT	.00000	.00000	.00000	.00000	.00000	.00000	.00000	.00000	.00000	.00000

CA20 747/1 01 S1 ORBITER DATA (CGN095) (20 JAN 75)

REFERENCE DATA

SREF = 2690.0000 SQ.FT. XMRP = 1109.0000 IN.XO
LREF = 474.8100 IN. YMRP = .0000 IN.YO
BREF = 936.6800 IN. ZMRP = 375.0000 IN.ZO
SCALE = .0300

PARAMETRIC DATA

ALPHAC =	8.000	BETAC =	5.000
ELV-IB =	.000	ELV-OB =	3.000
ELEVON =	5.000	MACH =	.600
BETAO =	.000	PHI =	7.500
DX =	10.000	DY =	10.000

RUN NO. 757/ 0 RN/L = 3.26 GRADIENT INTERVAL = -1.00/ 4.00

ALPHAO	DZ	MACH	DX	DY	BETAO	PHI	ALPHAH	BETA	CY	CLN	CSL
10.229	-2.945	.60060	9.43320	8.02160	.36630	7.50000	9.72940	4.98930	.00510	-.00510	-.01390
10.238	.916	.59990	8.90030	8.02590	.36290	7.50000	9.72990	4.97780	.00320	-.00410	-.01000
10.254	5.217	.59920	8.38880	8.02100	.36370	7.50000	9.72940	4.98330	.00120	-.00370	-.00750
10.286	12.241	.60010	7.33910	8.02610	.36490	7.50000	9.72730	4.96470	-.00160	-.00280	-.00550
10.352	27.562	.60020	5.20990	8.03700	.35920	7.50000	9.72480	4.97830	-.00270	-.00120	-.00370
10.383	42.621	.59970	3.12000	8.05510	.35360	7.50000	9.71610	4.97170	-.00250	-.00050	-.00310
10.385	47.697	.59990	2.41280	8.05700	.35090	7.50000	9.71670	4.97960	-.00220	-.00030	-.00300
	GRADIENT	.00000	.00000	.00000	.00000	.00000	.00000	.00000	.00000	.00000	.00000

RUN NO. 758/ 0 RN/L = 3.26 GRADIENT INTERVAL = -1.00/ 4.00

ALPHAO	DZ	MACH	DX	DY	BETAO	PHI	ALPHAH	BETA	CY	CLN	CSL
14.510	-1.170	.60020	8.03630	8.17130	.90250	7.50000	9.75370	4.98380	.00070	-.00330	-.01550
14.504	1.917	.60050	7.62130	8.16420	.90580	7.50000	9.75550	4.97220	-.00340	-.00290	-.01130
14.507	6.286	.59960	7.02320	8.15640	.90740	7.50000	9.75180	4.96980	-.00650	-.00240	-.00820
14.530	13.848	.60020	5.98650	8.14470	.90720	7.50000	9.74450	4.98380	-.01020	-.00110	-.00590
14.567	29.243	.60030	3.86020	8.15720	.90150	7.50000	9.73420	4.97640	-.01170	-.00030	-.00180
14.594	43.847	.60080	1.82560	8.17080	.89540	7.50000	9.73000	4.97790	-.01100	.00010	-.00030
14.605	58.655	.60070	-.24170	8.19240	.88780	7.50000	9.72470	4.97150	-.00820	.00000	-.00030
	GRADIENT	.00000	.00000	.00000	.00000	.00000	.00000	.00000	.00000	.00000	.00000

CA20 747/1 01 S1 ORBITER DATA (CGN096) (20 JAN 75)

REFERENCE DATA

SREF =	2690.0000 SQ.FT.	XMRP =	1109.0000 IN.XO		
LREF =	474.8100 IN.	YMRP =	.0000 IN.YO		
BREF =	936.6800 IN.	ZMRP =	375.0000 IN.ZO		
SCALE =	.0300				

PARAMETRIC DATA

ALPHAC =	4.000	BETAC =	-5.000
ELV-IB =	.000	ELV-OB =	3.000
ELEVON =	5.000	MACH =	.600
BETAO =	-5.000	PHI =	7.500
DX =	.000	DY =	10.000

RUN NO. 804/ 0 RN/L = 3.28 GRADIENT INTERVAL = -1.00/ 4.00

ALPHAO	DZ	MACH	DX	DY	BETAO	PHI	ALPHAH	BETA	CY	CLN	CSL
10.581	.639	.59990	.65310	11.60330	-4.90570	7.50000	5.85380	-4.99080	.04400	.01540	.00430
10.577	3.578	.59970	.45410	11.60440	-4.90260	7.50000	5.84720	-4.98290	.04440	.01480	.00340
10.576	7.854	.60050	.16150	11.61590	-4.90650	7.50000	5.84590	-4.97530	.04590	.01470	.00290
10.583	15.309	.60030	-.34730	11.63520	-4.91210	7.50000	5.83640	-4.98310	.04780	.01470	.00250
10.601	30.620	.60070	-1.40130	11.66810	-4.92520	7.50000	5.82710	-4.97290	.05130	.01510	.00210
10.617	45.347	.60010	-2.42020	11.68410	-4.92890	7.50000	5.81980	-4.97990	.05260	.01540	.00170
10.614	47.836	.59960	-2.59130	11.68650	-4.93060	7.50000	5.81890	-4.97190	.05330	.01530	.00160
	GRADIENT	-.00007	-.06770	.00037	.00105	.00000	-.00225	.00269	.00014	-.00020	-.00031

RUN NO. 805/ 0 RN/L = 3.29 GRADIENT INTERVAL = -1.00/ 4.00

ALPHAO	DZ	MACH	DX	DY	BETAO	PHI	ALPHAH	BETA	CY	CLN	CSL
14.802	1.971	.60070	-.39910	11.58740	-4.33990	7.50000	5.87880	-4.99520	.04180	.01350	.00260
14.786	4.974	.60090	-.60690	11.58650	-4.33680	7.50000	5.87760	-4.98020	.04270	.01270	.00120
14.775	9.438	.59980	-.91750	11.59210	-4.33820	7.50000	5.87070	-4.97870	.04400	.01270	.00000
14.774	16.557	.60050	-1.40750	11.61020	-4.34400	7.50000	5.86150	-4.98720	.04620	.01270	-.00120
14.779	31.753	.60030	-2.45270	11.64460	-4.35890	7.50000	5.84370	-4.98040	.05060	.01320	-.00210
14.774	47.052	.60020	-3.50320	11.66200	-4.36560	7.50000	5.82950	-4.99910	.05200	.01370	-.00270
14.772	61.438	.59970	-4.49830	11.67880	-4.37510	7.50000	5.82190	-4.97970	.05430	.01420	-.00250
	GRADIENT	.00000	.00000	.00000	.00000	.00000	.00000	.00000	.00000	.00000	.00000

CA20 747/1 01 SI ORBITER DATA (CGN0977) (20 JAN 75)

REFERENCE DATA

SREF =	2690.0000 SQ.FT.	XMRP =	1109.0000 IN.XO		
LREF =	474.8100 IN.	YMRP =	.0000 IN.YO		
BREF =	936.6800 IN.	ZMRP =	375.0000 IN.ZO		
SCALE =	.0300				

PARAMETRIC DATA

ALPHAC =	8.000	BETAC =	-5.000
ELV-IB =	.000	ELV-OB =	3.000
ELEVON =	5.000	MACH =	.600
BETAO =	-5.000	PHI =	7.500
DX =	.000	DY =	10.000

RUN NO. 811/ 0 RN/L = 3.26 GRADIENT INTERVAL = -1.00/ 4.00

ALPHAO	DZ	MACH	DX	DY	BETAO	PHI	ALPHAW	BETA	CY	CLN	CSL
10.393	-.093	.59910	-1.05190	11.61180	-4.92370	7.50000	9.67230	-4.98240	.04800	.01640	.00070
10.413	2.882	.60020	-1.45190	11.60080	-4.91330	7.50000	9.67070	-4.97430	.04520	.01620	.00010
10.438	7.530	.59990	-2.08240	11.60720	-4.90870	7.50000	9.66620	-4.97440	.04490	.01570	-.00040
10.483	15.189	.60080	-3.13490	11.63100	-4.91100	7.50000	9.66350	-4.97360	.04620	.01550	-.00020
10.527	29.943	.59960	-5.16010	11.67380	-4.92360	7.50000	9.65390	-4.97220	.04950	.01590	.00030
10.564	45.352	.60010	-7.29310	11.70260	-4.92950	7.50000	9.65000	-4.97110	.05180	.01580	.00060
10.566	47.555	.59980	-7.60080	11.70580	-4.93000	7.50000	9.65160	-4.98630	.05140	.01610	.00060
	GRADIENT	.00037	-.13446	-.00370	.00350	.00000	-.00054	.00272	-.00094	-.00007	-.00020

RUN NO. 810/ 0 RN/L = 3.26 GRADIENT INTERVAL = -1.00/ 4.00

ALPHAO	DZ	MACH	DX	DY	BETAO	PHI	ALPHAW	BETA	CY	CLN	CSL
14.680	.829	.60040	-2.17220	11.58110	-4.34470	7.50000	9.70740	-4.97590	.04260	.01310	.00500
14.684	3.926	.59960	-2.59130	11.58530	-4.33890	7.50000	9.69930	-4.98360	.04310	.01200	.00420
14.700	7.951	.60050	-3.13840	11.58450	-4.33550	7.50000	9.69450	-4.98390	.04170	.01240	.00390
14.711	15.864	.59950	-4.22030	11.60190	-4.33950	7.50000	9.68490	-4.97770	.04320	.01260	.00230
14.732	30.777	.59960	-6.27550	11.65440	-4.35420	7.50000	9.67290	-4.97590	.04980	.01290	-.00240
14.745	45.232	.60020	-8.26290	11.67750	-4.36110	7.50000	9.66090	-4.98040	.05090	.01340	-.00270
14.748	60.426	.59990	-10.26950	11.69300	-4.37020	7.50000	9.59040	-4.96340	.05240	.01430	-.00290
	GRADIENT	-.00026	-.13531	.00136	.00187	-.00000	-.00262	-.00249	.00016	-.00036	-.00026

CA20 747/1 01 S1 ORBITER DATA (CGN098) (20 JAN 75)

REFERENCE DATA

SREF = 2690.0000 SQ.FT. XMRP = 1109.0000 IN.XO
LREF = 474.8100 IN. YMRP = .0000 IN.YO
BREF = 936.6800 IN. ZMRP = 375.0000 IN.ZO
SCALE = .0300

PARAMETRIC DATA

ALPHAC =	4.000	BETAC =	.000
ELV-IB =	.000	ELV-OB =	3.000
ELEVON =	5.000	MACH =	.600
BETAO =	-5.000	PHI =	7.500
DX =	.000	DY =	10.000

RUN NO. 803/ 0 RN/L = 3.29 GRADIENT INTERVAL = -1.00/ 4.00

ALPHAO	DZ	MACH	DX	DY	BETAO	PHI	ALPHAW	BETA	CY	CLN	CSL
10.589	.754	.59940	.66640	10.56860	-4.90970	7.50000	5.84440	-.00200	.05090	.01320	-.00020
10.591	3.682	.59900	.46860	10.56300	-4.90860	7.50000	5.84070	.00000	.04990	.01350	.00000
10.585	7.812	.60050	.18690	10.57170	-4.91050	7.50000	5.83450	.00630	.05050	.01340	.00030
10.587	15.159	.60020	-.31050	10.56790	-4.91080	7.50000	5.82350	.00350	.04860	.01440	.00080
10.599	28.483	.60030	-1.22300	10.59810	-4.92080	7.50000	5.81450	-.00380	.05180	.01430	.00120
10.609	45.607	.60050	-2.39880	10.61570	-4.92840	7.50000	5.80530	.00650	.05350	.01470	.00120
10.609	47.846	.60020	-2.55520	10.61480	-4.92850	7.50000	5.80650	.00650	.05320	.01490	.00120
	GRADIENT	-.00014	-.06755	-.00123	.00038	.00000	-.00126	.00068	-.00034	.00010	.00007

RUN NO. 806/ 0 RN/L = 3.28 GRADIENT INTERVAL = -1.00/ 4.00

ALPHAO	DZ	MACH	DX	DY	BETAO	PHI	ALPHAW	BETA	CY	CLN	CSL
14.807	2.070	.60080	-.38660	10.63100	-4.34420	7.50000	5.88990	.00980	.04780	.01190	-.00130
14.795	5.158	.60030	-.60460	10.62780	-4.34220	7.50000	5.88820	.01080	.04770	.01170	-.00130
14.785	9.244	.59960	-.88860	10.62780	-4.34200	7.50000	5.88130	.00310	.04750	.01150	-.00150
14.782	17.214	.60030	-1.43520	10.62840	-4.34560	7.50000	5.86420	.01620	.04740	.01260	-.00190
14.782	31.661	.59940	-2.42890	10.65410	-4.35590	7.50000	5.84360	.01300	.05050	.01300	-.00250
14.778	47.097	.60050	-3.49310	10.66870	-4.36210	7.50000	5.83380	.01160	.05150	.01340	-.00280
14.777	61.842	.60050	-4.52010	10.68370	-4.37040	7.50000	5.83040	.02120	.05350	.01390	-.00280
	GRADIENT	.00000	.00000	.00000	.00000	.00000	.00000	.00000	.00000	.00000	.00000

ORIGINAL PAGE IS
OF POOR QUALITY

CA20 747/1 01 S1 ORBITER DATA (CON099) (20 JAN 75)

REFERENCE DATA

SREF =	2690.0000 SQ.FT.	XMRP =	1109.0000 IN.XO		
LREF =	474.8180 IN.	YMRP =	.0000 IN.YO		
BREF =	936.6800 IN.	ZMRP =	375.0000 IN.ZO		
SCALE =	.0300				

PARAMETRIC DATA

ALPHAC =	8.000	BETAC =	.000
ELV-IB =	.000	ELV-OB =	3.000
ELEVON =	5.000	MACH =	.600
BETAO =	-5.000	PHI =	7.500
DX =	.000	DY =	10.000

RUN NO. 812/ 0 RN/L = 3.26 GRADIENT INTERVAL = -1.00/ 4.00

ALPHAO	DZ	MACH	DX	DY	BETAO	PHI	ALPHAW	BETA	CY	CLN	CSL
10.406	-.598	.60000	-.96780	10.55670	-4.93340	7.50000	9.67260	-.00310	.05690	.01430	-.00530
10.423	3.005	.60030	-1.45270	10.54650	-4.92570	7.50000	9.66800	-.00610	.05360	.01450	-.00400
10.446	7.573	.60010	-2.07700	10.53970	-4.91900	7.50000	9.66960	-.00850	.05090	.01470	-.00300
10.488	15.463	.60050	-3.15600	10.53870	-4.91500	7.50000	9.66200	-.00260	.04840	.01520	-.00170
10.541	30.172	.59930	-5.18260	10.56410	-4.91980	7.50000	9.65470	.00010	.04930	.01580	-.00030
10.563	44.895	.59930	-7.22310	10.58760	-4.92650	7.50000	9.64680	.00120	.05100	.01590	.00030
10.567	47.483	.60010	-7.43590	10.58970	-4.92750	7.50000	9.64790	.00120	.05060	.01610	.00040
	GRADIENT	.00008	-.13458	-.00283	.00214	.00000	-.00128	-.00083	-.00092	.00006	.00036

RUN NO. 809/ 0 RN/L = 3.27 GRADIENT INTERVAL = -1.00/ 4.00

ALPHAO	DZ	MACH	DX	DY	BETAO	PHI	ALPHAW	BETA	CY	CLN	CSL
14.690	.880	.60010	-2.20570	10.62000	-4.36030	7.50000	9.78590	.00160	.05290	.01160	-.00010
14.694	3.883	.59920	-2.61840	10.61290	-4.35390	7.50000	9.78560	-.00800	.05090	.01150	.00100
14.701	8.089	.59980	-3.19440	10.60340	-4.34950	7.50080	9.77680	.00430	.04870	.01160	.00160
14.719	15.576	.60050	-4.22500	10.60120	-4.34600	7.50000	9.76790	-.00550	.04600	.01230	.00210
14.734	30.598	.59970	-6.31890	10.63630	-4.35490	7.50000	9.75500	-.00450	.05030	.01280	-.00260
14.751	45.433	.60000	-8.38220	10.65290	-4.36030	7.50000	9.74330	-.00010	.05080	.01350	-.00260
14.752	60.072	.59990	-10.42840	10.66490	-4.36590	7.50000	9.73740	.00160	.05130	.01440	-.00280
	GRADIENT	-.00030	-.13742	-.00236	.00213	.00000	-.00043	-.00320	-.00067	-.00003	.00037

CA20 747/1 01 S1 ORBITER DATA (CGN100) (20 JAN 75)

REFERENCE DATA

SREF = 2690.0000 SQ.FT. XMRP = 1109.0000 IN.XO
LREF = 474.8100 IN. YMRP = .0000 IN.YO
BREF = 936.6800 IN. ZMRP = 375.0000 IN.ZO
SCALE = .0300

PARAMETRIC DATA

ALPHAC = 4.000 BETAC = 5.000
ELV-IB = .000 ELV-OB = 3.000
ELEVON = 5.000 MACH = .600
BETAO = -5.000 PHI = 7.500
DX = .000 DY = 10.000

RUN NO. 802/ 0 RN/L = 3.31 GRADIENT INTERVAL = -1.00/ 4.00

ALPHAO	DZ	MACH	DX	DY	BETAO	PHI	ALPHAH	BETA	CY	CLN	CSL
10.632	.542	.60000	.66220	9.42040	-4.89370	7.50000	5.84060	4.96470	.05400	.00990	-.00630
10.612	3.385	.60040	.47030	9.42520	-4.89960	7.50000	5.83720	4.97190	.05370	.01070	-.00430
10.597	7.664	.60000	.18040	9.43110	-4.90530	7.50000	5.83210	4.98920	.05410	.01120	-.00270
10.597	15.623	.60080	-.35820	9.44230	-4.91010	7.50000	5.82130	4.96770	.05310	.01210	-.00100
10.604	30.599	.59980	-1.38180	9.45100	-4.91870	7.50000	5.81040	4.98430	.05310	.01340	.00040
10.607	45.321	.60010	-2.38970	9.46750	-4.92620	7.50000	5.80330	4.97660	.05430	.01400	.00080
10.608	47.816	.59960	-2.56310	9.47050	-4.92700	7.50000	5.80230	4.98460	.05520	.01370	.00080
	GRADIENT	.00014	-.06749	.00169	-.00207	-.00000	-.00120	.00253	-.00011	.00028	.00070

RUN NO. 807/ 0 RN/L = 3.28 GRADIENT INTERVAL = -1.00/ 4.00

ALPHAO	DZ	MACH	DX	DY	BETAO	PHI	ALPHAH	BETA	CY	CLN	CSL
14.862	2.028	.59920	-.39040	9.55980	-4.33510	7.50000	5.85930	4.97110	.04800	.01120	-.00410
14.831	4.948	.60030	-.58900	9.55940	-4.33560	7.50000	5.85320	4.97710	.04790	.01100	-.00360
14.807	9.169	.60040	-.87690	9.56420	-4.33950	7.50000	5.84700	4.98400	.04840	.01120	-.00290
14.793	16.781	.59910	-1.40070	9.56640	-4.34260	7.50000	5.83710	4.98590	.04820	.01200	-.00260
14.783	31.685	.59990	-2.41640	9.57980	-4.35320	7.50000	5.81770	4.99680	.04890	.01330	-.00260
14.782	46.800	.60030	-3.45430	9.59590	-4.35850	7.50000	5.80880	4.98200	.05030	.01360	-.00280
14 777	61.889	.60060	-4.49120	9.60740	-4.36720	7.50000	5.80130	4.99120	.05150	.01440	-.00300
	GRADIENT	.00000	.00000	.00000	.00000	.00000	.00000	.00000	.00000	.00000	.00000

CA20 747/1 01 S1 ORBITER DATA (CGNI01) (20 JAN 75)

REFERENCE DATA

SREF =	2690.0000 SQ.FT.	XMRP =	1109.0000 IN.XO		
LREF =	474.8100 IN.	YMRP =	.0000 IN.YO		
BREF =	936.6800 IN.	ZMRP =	375.0000 IN.ZO		
SCALE =	.0300				

PARAMETRIC DATA

ALPHAC =	8.000	BETAC =	5.000
ELV-IB =	.000	ELV-OB =	3.000
ELEVON =	5.000	MACH =	.600
BETAO =	-5.000	PHI =	7.500
DX =	.000	DY =	10.000

RUN NO. 813/ 0 RN/L = 3.25 GRADIENT INTERVAL = -1.00/ 4.00

ALPHAO	DZ	MACH	DX	DY	BETAO	PHI	ALPHAW	BETA	CY	CLN	CSL
10.452	-.442	.59950	-1.00350	9.33640	-4.90170	7.50000	9.67500	5.00340	.05570	.01060	-.01110
10.446	3.090	.59940	-1.48320	9.34360	-4.90830	7.50000	9.67640	4.99520	.05390	.01220	-.00790
10.457	7.446	.59950	-2.07650	9.33990	-4.90990	7.50000	9.67680	5.00300	.05120	.01350	-.00570
10.492	15.406	.60030	-3.16620	9.35320	-4.91170	7.50000	9.67040	4.98840	.04980	.01420	-.00330
10.544	30.322	.59990	-5.21950	9.36460	-4.91650	7.50000	9.66170	5.00330	.04840	.01570	-.00100
10.565	44.986	.60030	-7.24190	9.38730	-4.92340	7.50000	9.65900	4.99650	.04990	.01590	-.00020
10.568	47.470	.59940	-7.59050	9.39030	-4.92370	7.50000	9.65730	4.99660	.05030	.01580	-.00010
	GRADIENT	-.00003	-.13580	.00204	-.00187	-.00000	.00040	-.00232	-.00051	.00045	.00091

RUN NO. 808/ 0 RN/L = 3.28 GRADIENT INTERVAL = -1.00/ 4.00

ALPHAO	Z	MACH	DX	DY	BETAO	PHI	ALPHAW	BETA	CY	CLN	CSL
14.737	1.500	.59960	-2.26990	9.52040	-4.34530	7.50000	9.70640	4.96760	.05450	.00970	-.00580
14.727	4.732	.59970	-2.70730	9.51530	-4.34640	7.50000	9.70310	4.97450	.05240	.01040	-.00290
14.725	9.125	.60070	-3.30300	9.50660	-4.34710	7.50000	9.69750	4.99770	.04990	.01110	-.00080
14.735	16.820	.59920	-4.35290	9.50260	-4.34540	7.50000	9.68820	4.98480	.04680	.01220	.00130
14.755	31.671	.60060	-6.39490	9.52470	-4.35200	7.50000	9.67960	4.98700	.04810	.01290	-.00020
14.761	46.564	.60030	-8.45280	9.53750	-4.35700	7.50000	9.67160	4.98740	.04880	.01370	-.00140
14.756	61.712	.60010	-10.55320	9.56010	-4.36590	7.50000	9.66500	4.98810	.05180	.01380	-.00260
	GRADIENT	.00000	.00000	.00000	.00000	.00000	.00000	.00000	.00000	.00000	.00000

CA20 747/1 01 SI ORBITER DATA (CGN102) (20 JAN 75)

REFERENCE DATA

SREF = 2690.0000 SQ.FT. XMRP = 1109.0000 IN.XO
LREF = 474.8100 IN. YMRP = .0000 IN.YO
BREF = 936.6800 IN. ZMRP = 375.0000 IN.ZO
SCALE = .0300

PARAMETRIC DATA

ALPHAC =	4.000	BETAC =	-5.000
ELV-IB =	.000	ELV-OB =	3.000
ELEVON =	5.000	MACH =	.600
BETAO =	-5.000	PHI =	7.500
DX =	.000	DY =	10.000

RUN NO. 815/ 0 RN/L = 3.26 GRADIENT INTERVAL = -1.00/ 4.00

ALPHAO	DZ	MACH	DX	DY	BETAO	PHI	ALPHAH	BETA	CY	CLN	CSL
14.790	1.983	.60070	-.39550	11.56920	-4.33750	7.50000	5.87520	-4.98760	.03850	.01470	.00220
14.773	4.801	.60000	-.59210	11.57770	-4.33630	7.50000	5.87430	-4.99050	.04130	.01340	.00090
14.771	9.259	.59970	-.89890	11.57700	-4.33780	7.50000	5.86980	-4.96350	.04110	.01350	.00160
14.770	16.962	.60030	-1.42840	11.59840	-4.34500	7.50000	5.86010	-4.97990	.04340	.01370	.00070
14.773	31.562	.60000	-2.43150	11.62830	-4.35920	7.50000	5.84300	-4.97290	.04690	.01460	-.00030
14.769	46.760	.60020	-3.47550	11.64520	-4.36560	7.50000	5.82880	-4.97390	.04860	.01480	-.00070
14.768	61.866	.60010	-4.51840	11.66000	-4.37310	7.50000	5.82040	-4.97220	.05020	.01540	-.00090
	GRADIENT	.00000	.00000	.00000	.00000	.00000	.00000	.00000	.00000	.00000	.00000

CA20 747/1 01 SI ORBITER DATA (CGN103) (20 JAN 75)

REFERENCE DATA

SREF = 2690.0000 SQ.FT. XMRP = 1109.0000 IN.XO
LREF = 474.8100 IN. YMRP = .0000 IN.YO
BREF = 936.6800 IN. ZMRP = 375.0000 IN.ZO
SCALE = .0300

PARAMETRIC DATA

ALPHAC =	4.000	BETAC =	.000
ELV-IB =	.000	ELV-OB =	3.000
ELEVON =	5.000	MACH =	.600
BETAO =	-5.000	PHI =	7.500
DX =	.000	DY =	10.000

RUN NO. 814/ 0 RN/L = 3.24 GRADIENT INTERVAL = -1.00/ 4.00

ALPHAO	DZ	MACH	DX	DY	BETAO	PHI	ALPHAH	BETA	CY	CLN	CSL
14.793	2.161	.60000	-.39170	10.63030	-4.34420	7.50000	5.88550	-.01290	.04710	.01220	-.00170
14.782	5.231	.59970	-.60470	10.62790	-4.34260	7.50000	5.87880	-.01210	.04690	.01210	-.00150
14.771	9.123	.59920	-.87590	10.62870	-4.34290	7.50000	5.87490	-.02000	.04690	.01220	-.00170
14.766	16.756	.59950	-1.40020	10.62590	-4.34500	7.50000	5.86050	-.01430	.04580	.01320	-.00200
14.769	31.625	.60020	-2.41880	10.65530	-4.35690	7.50000	5.83930	-.02550	.04890	.01370	-.00260
14.767	46.769	.60020	-3.46380	10.66050	-4.36120	7.50000	5.82970	-.01910	.04870	.01460	-.00280
14.766	61.571	.59960	-4.49070	10.67110	-4.36830	7.50000	5.82390	-.00940	.05000	.01530	-.00290
	GRADIENT	.00000	.00000	.00000	.00000	.00000	.00000	.00000	.00000	.00000	.00000

CA20 747/1 01 SI ORBITER DATA (CGN1041 1 20 JAN 75)

REFERENCE DATA

SREF =	2690.0000 SQ.FT.	XMRP =	1109.0000 IN.XO
LREF =	474.8100 IN.	YMRP =	.0000 IN.YO
BREF =	936.6800 IN.	ZMRP =	375.0000 IN.ZO
SCALE =	.0300		

PARAMETRIC DATA

ALPHAC =	4.000	BETAC =	-6.000
ELV-IB =	.000	ELV-OB =	3.000
ELEVON =	5.000	MACH =	.600
BETAO =	-5.000	PHI =	.000
DX =	10.000	DY =	.000

RUN NO. 830/ 0 RN/L = 3.29 GRADIENT INTERVAL = -1.00/ 4.00

ALPHAO	DZ	MACH	DX	DY	BETAO	PHI	ALPHAH	BETA	CY	CLN	CSL
10.325	-1.343	.60050	10.81020	2.27280	-5.21650	.00000	5.82520	-4.95370	.03810	.01890	.00690
10.312	1.825	.60080	10.60190	2.28000	-5.21910	.00000	5.82640	-4.94080	.04000	.01900	.00530
10.306	6.300	.60070	10.30090	2.29610	-5.22500	.00000	5.82270	-4.94040	.04290	.01900	.00330
10.313	13.860	.60000	9.78720	2.31560	-5.23200	.00000	5.81650	-4.94080	.04650	.01880	.00180
10.331	28.690	.60030	8.77630	2.34420	-5.24080	.00000	5.80760	-4.95590	.05040	.01850	.00100
10.341	43.881	.60040	7.73970	2.34160	-5.24020	.00000	5.79900	-4.93970	.05120	.01820	.00030
	GRADIENT	.00000	.00000	.00000	.00000	.00000	.00000	.00000	.00000	.00000	.00000

RUN NO. 835/ 0 RN/L = 3.27 GRADIENT INTERVAL = -1.00/ 4.00

ALPHAO	DZ	MACH	DX	DY	BETAO	PHI	ALPHAH	BETA	CY	CLN	CSL
14.692	1.273	.60040	9.46210	2.19680	-5.18550	.00000	5.85310	-4.95420	.04290	.01510	.01250
14.668	4.371	.60000	9.25780	2.20440	-5.19130	.00000	5.84860	-4.94840	.04370	.01650	.00980
14.657	8.918	.60010	8.95000	2.21850	-5.19620	.00000	5.84580	-4.94910	.04620	.01680	.00740
14.654	16.303	.59960	8.44290	2.24340	-5.20370	.00000	5.83620	-4.94140	.05190	.01660	.00240
14.657	31.560	.59910	7.39910	2.26540	-5.21060	.00000	5.82260	-4.94510	.05610	.01680	-.00140
14.663	46.389	.59940	6.38570	2.27270	-5.21250	.00000	5.81290	-4.94850	.05670	.01700	-.00220
14.672	61.453	.59910	5.38270	2.25720	-5.21370	.00000	5.80460	-4.94790	.05240	.01820	.00290
	GRADIENT	.00000	.00000	.00000	.00000	.00000	.00000	.00000	.00000	.00000	.00000

CA20 747/1 01 SI ORBITER DATA (CGN105) (20 JAN 75)

REFERENCE DATA

SREF = 2690.0000 SQ.FT. XMRP = 1109.0000 IN.XO
LREF = 474.8100 IN. YMRP = .0000 IN.YO
BREF = 936.6800 IN. ZMRP = 375.0000 IN.ZO
SCALE = .0300

PARAMETRIC DATA

ALPHAC = 8.000 BETAC = -5.000
ELV-IB = .000 ELV-OB = 3.000
ELEVON = 5.000 MACH = .600
BETAO = -5.000 PHI = .000
DX = 10.000 DY = .000

RUN NO. 841/ 0 RN/L = 3.26 GRADIENT INTERVAL = -1.00/ 4.00

ALPHAO	DZ	MACH	DX	DY	BETAO	PHI	ALPHAW	BETA	CY	CLN	CSL
10.296	-3.049	.60000	9.37130	2.28520	-5.19050	.00000	9.65170	-5.00970	.03270	.01750	.00690
10.307	-.020	.60070	8.97290	2.29580	-5.19890	.00000	9.65150	-5.00360	.03350	.01930	.00250
10.328	4.578	.59940	8.34450	2.32580	-5.21110	.00000	9.65270	-5.00320	.03880	.01940	.00020
10.359	12.050	.59930	7.32250	2.35920	-5.22350	.00000	9.65220	-5.01160	.04400	.01920	-.00110
10.437	27.168	.59920	5.23740	2.39020	-5.23710	.00000	9.64590	-5.00940	.04930	.01910	-.00100
10.469	41.982	.60070	3.20170	2.38590	-5.24060	.00000	9.63880	-4.99400	.05130	.01850	-.00110
	GRADIENT	.00000	.00000	.00000	.00000	.00000	.00000	.00000	.00000	.00000	.00000

RUN NO. 836/ 0 RN/L = 3.31 GRADIENT INTERVAL = -1.00/ 4.00

ALPHAO	DZ	MACH	DX	DY	BETAO	PHI	ALPHAW	BETA	CY	CLN	CSL
14.545	-.709	.60080	7.91490	2.17100	-5.16670	.00000	9.68170	-4.94920	.03130	.01750	.01270
14.535	2.486	.60040	7.49070	2.19280	-5.17480	.00000	9.68270	-4.94640	.03500	.01790	.00970
14.550	7.114	.60040	6.86490	2.22060	-5.18440	.00000	9.67370	-4.94690	.04000	.01760	.00800
14.571	14.418	.60010	5.87150	2.24480	-5.19520	.00000	9.66760	-4.94090	.04460	.01760	.00670
14.610	29.342	.59920	3.82840	2.27660	-5.20660	.00000	9.66010	-4.94920	.04940	.01780	.00520
14.638	44.463	.60030	1.75100	2.28750	-5.21020	.00000	9.65230	-4.94820	.05090	.01770	.00440
14.650	59.174	.60010	-.27960	2.28950	-5.21320	.00000	9.64650	-4.94020	.05140	.01820	.00400
	GRADIENT	-.00013	-.13280	.00692	-.00254	.00000	.00031	.00088	.00116	.00013	-.00054

CA20 747/1 01 S1 ORBITER DATA (CGN106) (20 JAN 75)

REFERENCE DATA

SREF =	2690.0000 SQ.FT.	XMRP =	1109.0000 IN.XO		
LREF =	474.8100 IN.	YMRP =	.0000 IN.YO		
BREF =	936.6800 IN.	ZMRP =	375.0000 IN.ZO		
SCALE =	.0300				

PARAMETRIC DATA

ALPHAC =	4.000	BETAC =	-5.000
ELV-IB =	.000	ELV-OB =	3.000
ELEVON =	5.000	MACH =	.600
BETAO =	-5.000	PHI =	.000
DX =	.000	DY =	10.000

RUN NO. 844/ 0 RN/L = 3.30 GRADIENT INTERVAL = -1.00/ 4.00

ALPHAO	DZ	MACH	DX	DY	BETAO	PHI	ALPHAW	BETA	CY	CLN	CSL
10.440	-.766	.59920	.77820	11.46600	-5.24580	.00000	5.84320	-4.97280	.04680	.01750	-.00070
10.421	2.266	.59970	.58010	11.45390	-5.23960	.00000	5.84170	-4.96410	.04510	.01730	-.00060
10.417	6.604	.59950	.28450	11.45320	-5.23900	.00000	5.83810	-4.95540	.04540	.01710	-.00090
10.423	14.069	.59930	-.22360	11.46500	-5.24390	.00000	5.82880	-4.96580	.04680	.01720	-.00100
10.442	29.201	.60090	-1.26380	11.49370	-5.25780	.00000	5.82110	-4.98170	.04990	.01760	-.00050
10.451	44.256	.59990	-2.29630	11.50700	-5.26440	.00000	5.81170	-4.99130	.05190	.01770	-.00030
	GRADIENT	.00016	-.06534	-.00399	.00204	.00000	-.00049	.00287	-.00056	-.00007	.00003

CA20 747/1 01 S1 ORBITER DATA (CGN107) (20 JAN 75)

REFERENCE DATA

SREF =	2690.0000 SQ.FT.	XMRP =	1109.0000 IN.XO		
LREF =	474.8100 IN.	YMRP =	.0000 IN.YO		
BREF =	936.6800 IN.	ZMRP =	375.0000 IN.ZO		
SCALE =	.0300				

PARAMETRIC DATA

ALPHAC =	4.000	BETAC =	-5.000
ELV-IB =	.000	ELV-OB =	3.000
ELEVON =	5.000	MACH =	.600
BETAO =	-5.000	PHI =	.000
DX =	10.000	DY =	10.000

RUN NO. 819/ 0 RN/L = 3.26 GRADIENT INTERVAL = -1.00/ 4.00

ALPHAO	DZ	MACH	DX	DY	BETAO	PHI	ALPHAW	BETA	CY	CLN	CSL
10.347	-1.294	.60000	10.79930	12.27000	-5.22040	.00000	5.82480	-4.94250	.04720	.01690	-.00130
10.332	1.624	.59960	10.60860	12.25380	-5.21300	.00000	5.82770	-4.94090	.04410	.01710	-.00130
10.329	6.160	.59980	10.30320	12.25660	-5.21390	.00000	5.82490	-4.94060	.04450	.01710	-.00160
10.340	13.665	.59960	9.79210	12.26980	-5.21790	.00000	5.81970	-4.94960	.04610	.01710	-.00180
10.361	28.609	.60000	8.77050	12.29260	-5.22970	.00000	5.81120	-4.95700	.04910	.01760	-.00110
10.373	43.844	.59970	7.72830	12.30200	-5.23610	.00000	5.80280	-4.94920	.05100	.01770	-.00070
	GRADIENT	.00000	.00000	.00000	.00000	.00000	.00000	.00000	.00000	.00000	.00000

ORIGINAL PAGE IS
OF POOR QUALITY

CA20 747/1 01 SI ORBITER DATA (CGN107) (20 JAN 75)

REFERENCE DATA

SREF = 2690.0000 SQ.FT. XMRP = 1109.0000 IN.XO
LREF = 474.8100 IN. YMRP = .0000 IN.YO
BREF = 936.6800 IN. ZMRP = 375.0000 IN.ZO
SCALE = .0300

PARAMETRIC DATA

ALPHAC = 4.000 BETAC = -5.000
ELV-IB = .000 ELV-OB = 3.000
ELEVON = 5.000 MACH = .600
BETAO = -5.000 PHI = .000
DX = 10.000 DY = 10.000

RUN NO. 820/ 0 RN/L = 3.25 GRADIENT INTERVAL = -1.00/ 4.00

ALPHAO	DZ	MACH	DX	DY	BETAO	PHI	ALPHAW	BETA	CY	CLN	CSL
14.674	2.198	.59990	9.40160	12.14780	-5.18880	.00000	5.84790	-4.94690	.03960	.01940	.00500
14.656	5.136	.59950	9.20660	12.15380	-5.18230	.00000	5.84880	-4.94700	.04200	.01710	.00450
14.659	9.779	.59920	8.89000	12.15850	-5.18330	.00000	5.84540	-4.94090	.04360	.01660	.00400
14.655	17.264	.60090	8.38210	12.17450	-5.18990	.00000	5.83750	-4.94980	.04550	.01680	.00370
14.666	32.135	.60020	7.36720	12.19480	-5.20170	.00000	5.82280	-4.94830	.04920	.01730	.00320
14.669	47.232	.59990	6.32980	12.21060	-5.20820	.00000	5.81630	-4.95250	.05120	.01760	.00260
14.671	62.086	.60090	5.31860	12.22610	-5.21690	.00000	5.80290	-4.94930	.05350	.01810	.00230
	GRADIENT	.00000	.00000	.00000	.00000	.00000	.00000	.00000	.00000	.00000	.00000

CA20 747/1 01 SI ORBITER DATA (CGN108) (03 SEP 75)

REFERENCE DATA

SREF = 2690.0000 SQ.FT. XMRP = 1109.0000 IN.XO
LREF = 474.8100 IN. YMRP = .0000 IN.YO
BREF = 936.6800 IN. ZMRP = 375.0000 IN.ZO
SCALE = .0300

PARAMETRIC DATA

ALPHAC = 8.000 BETAC = -5.000
ELV-IB = .000 ELV-OB = 3.000
ELEVON = 5.000 MACH = .600
BETAO = -5.000 PHI = .000
DX = 10.000 DY = 10.000

RUN NO. 0/ 0 RN/L = 3.24 GRADIENT INTERVAL = .00/ 12.00

ALPHAO	DZ	MACH	DX	DY	BETAO	PHI	ALPHAW	BETA	CY	CLN	CSL
10.102	-2.746	.60020	9.41230	12.35040	-5.23470	.00000	9.67100	-4.96040	.05400	.01690	-.00710
10.121	.382	.60070	8.99580	12.32340	-5.21950	.00000	9.67210	-4.96600	.04850	.01700	-.00730
10.146	4.894	.60050	8.39130	12.31250	-5.21220	.00000	9.67360	-4.96550	.04670	.01660	-.00740
10.184	12.419	.59910	7.35200	12.30890	-5.21150	.00000	9.66950	-4.95820	.04650	.01670	-.00680
10.257	27.611	.59910	5.25330	12.33560	-5.22430	.00000	9.66320	-4.97280	.04920	.01720	-.00480
10.295	42.408	.60060	3.20660	12.34980	-5.23390	.00000	9.66060	-4.96480	.05140	.01740	-.00330
	GRADIENT	-.00004	-.13620	-.00242	.00162	.00000	.00033	.00011	-.00040	-.00009	-.00002

CA20 747/1 01 S1 ORBITER DATA (CGN108) (03 SEP 75)

REFERENCE DATA

SREF = 2690.0000 SQ.FT. XMRP = 1109.0000 IN.XO
LREF = 474.8100 IN. YMRP = .0000 IN.YO
BREF = 936.6800 IN. ZMRP = 375.0000 IN.ZO
SCALE = .0300

PARAMETRIC DATA

ALPHAC = 8.000 BETAC = -5.000
ELV-IB = .000 ELV-OB = 3.000
ELEVON = 5.000 MACH = .600
BETAO = -5.000 PHI = .000
DX = 10.000 DY = 10.000

RUN NO. 0/ 0 RN/L = 3.24 GRADIENT INTERVAL = .00/ 12.00

ALPHAO	DZ	MACH	DX	DY	BETAO	PHI	ALPHAH	BETA	CY	CLN	CSL
14.529	-.426	.59900	7.87850	12.21900	-5.19280	.00000	9.70100	-4.94840	.04830	.01740	-.00150
14.532	2.587	.60000	7.47560	12.21350	-5.18440	.00000	9.69960	-4.94880	.04790	.01580	-.00080
14.546	7.236	.59950	6.84400	12.20280	-5.18130	.00000	9.69590	-4.94130	.04610	.01600	-.00040
14.574	14.804	.59940	5.81040	12.20650	-5.18370	.00000	9.68990	-4.94590	.04620	.01620	.00060
14.612	29.618	.60010	3.77810	12.23240	-5.19730	.00000	9.68030	-4.95430	.04900	.01690	.00190
14.638	44.620	.59980	1.70940	12.24440	-5.20570	.00000	9.67240	-4.94390	.05100	.01730	.00260
14.647	59.279	.60050	-.31800	12.25690	-5.21300	.00000	9.66660	-4.94210	.05250	.01780	.00290
	GRADIENT	-.00011	-.13586	-.00228	.00067	.00000	-.00080	.00161	-.00039	.00004	.00009

CA20 747/1 01 S1 ORBITER DATA (CGN109) (20 JAN 75)

REFERENCE DATA

SREF = 2690.0000 SQ.FT. XMRP = 1109.0000 IN.XO
LREF = 474.8100 IN. YMRP = .0000 IN.YO
BREF = 936.6800 IN. ZMRP = 375.0000 IN.ZO
SCALE = .0300

PARAMETRIC DATA

ALPHAC = 4.000 BETAC = .000
ELV-IB = .000 ELV-OB = 3.000
ELEVON = 5.000 MACH = .600
BETAO = -5.000 PHI = .000
DX = 10.000 DY = .000

RUN NO. 831/ 0 RN/L = 3.27 GRADIENT INTERVAL = -1.00/ 4.00

ALPHAO	DZ	MACH	DX	DY	BETAO	PHI	ALPHAH	BETA	CY	CLN	CSL
10.322	-1.388	.59950	10.83060	.35760	-5.24010	.00000	5.82770	.01750	.04920	.01940	-.00030
10.306	1.603	.59900	10.63220	.35120	-5.23560	.00000	5.82730	.01740	.04820	.01940	-.00070
10.302	6.139	.59960	10.32610	.35200	-5.23390	.00000	5.82560	.01920	.04870	.01850	-.00100
10.313	13.778	.60010	9.80690	.35410	-5.23360	.00000	5.81850	.02270	.04920	.01820	-.00090
10.332	28.819	.60010	8.78170	.35250	-5.23920	.00000	5.80830	.02410	.05060	.01820	-.00030
10.343	43.741	.59970	7.76010	.35160	-5.23650	.00000	5.80220	.02420	.05070	.01790	-.00030
	GRADIENT	.00000	.00000	.00000	.00000	.00000	.00000	.00000	.00000	.00000	.00000

CA20 747/1 01 SI ORBITER DATA (CGN109) (20 JAN 75)

REFERENCE DATA

SREF = 2690.0000 SQ.FT. XMRP = 1109.0000 IN.XO
LREF = 474.8100 IN. YMRP = .0000 IN.YO
BREF = 936.6800 IN. ZMRP = 375.0000 IN.ZO
SCALE = .0300

PARAMETRIC DATA

ALPHAC = 4.000 BETAC = .000
ELV-IB = .000 ELV-OB = 3.000
ELEVON = 5.000 MACH = .600
BETAO = -5.000 PHI = .000
DX = 10.000 DY = .000

RUN NO. 834/ 0 RN/L = 3.28 GRADIENT INTERVAL = -1.00/ 4.00

ALPHAO	DZ	MACH	DX	DY	BETAO	PHI	ALPHAH	BETA	CY	CLN	CSL
14.694	.928	.60020	9.50130	.34230	-5.20480	.00000	5.85520	.04520	.04720	.01820	.00610
14.676	3.997	.60080	9.29690	.34420	-5.20390	.00000	5.85320	.04700	.04780	.01780	.00560
14.658	8.486	.60030	8.99580	.35120	-5.20340	.00000	5.84700	.04140	.04690	.01730	.00510
14.660	16.091	.60010	8.47870	.35490	-5.20500	.00000	5.83780	.05340	.05030	.01710	.00420
14.656	31.106	.59990	7.44890	.37940	-5.20880	.00000	5.82070	.05560	.05580	.01660	-.00180
14.662	46.023	.60010	6.42710	.37940	-5.20940	.00000	5.81320	.05490	.05570	.01690	-.00240
14.673	60.943	.59930	5.41320	.35910	-5.21050	.00000	5.80510	.05210	.05130	.01810	.00280
	GRADIENT	.00020	-.06659	.00062	.00029	.00000	-.00065	.00059	.00020	-.00013	-.00018

CA20 747/1 01 SI ORBITER DATA (CGN110) (20 JAN 75)

REFERENCE DATA

SREF = 2690.0000 SQ.FT. XMRP = 1109.0000 IN.XO
LREF = 474.8100 IN. YMRP = .0000 IN.YO
BREF = 936.6800 IN. ZMRP = 375.0000 IN.ZO
SCALE = .0300

PARAMETRIC DATA

ALPHAC = 8.000 BETAC = .000
ELV-IB = .000 ELV-OB = 3.000
ELEVON = 5.000 MACH = .600
BETAO = -5.000 PHI = .000
DX = 10.000 DY = .000

RUN NO. 840/ 0 RN/L = 3.28 GRADIENT INTERVAL = -1.00/ 4.00

ALPHAO	DZ	MACH	DX	DY	BETAO	PHI	ALPHAH	BETA	CY	CLN	CSL
10.304	-3.002	.60080	9.37460	.38610	-5.26550	.00000	9.65720	.05380	.05490	.02170	-.00410
10.306	-.075	.59930	8.98600	.36130	-5.24900	.00000	9.65830	.05400	.05160	.02070	-.00460
10.328	4.516	.59980	8.36210	.34360	-5.23870	.00000	9.65690	.06260	.04960	.01980	-.00470
10.369	12.075	.59940	7.33520	.33740	-5.23350	.00000	9.64850	.05410	.04690	.01910	-.00410
10.425	26.946	.60020	5.29150	.34810	-5.23860	.00000	9.64510	.05470	.05070	.01880	-.00240
10.467	42.070	.59950	3.20180	.35070	-5.23790	.00000	9.64320	.05490	.05150	.01820	-.00150
	GRADIENT	.00000	.00000	.00000	.00000	.00000	.00000	.00000	.00000	.00000	.00000

CA20 747/1 01 SI ORBITER DATA (CGN110) (20 JAN 75)

REFERENCE DATA

SREF =	2690.0000 SQ.FT.	XMRP =	1109.0000 IN.XO
LREF =	474.8100 IN.	YMRP =	.0000 IN.YO
BREF =	936.6800 IN.	ZMRP =	375.0000 IN.ZO
SCALE =	.0300		

PARAMETRIC DATA

ALPHAC =	8.000	BETAC =	.000
ELV-IB =	.000	ELV-OB =	3.000
ELEVON =	5.000	MACH =	.600
BETAO =	-5.000	PHI =	.000
DX =	10.000	DY =	.000

RUN NO. 837/ 0 RN/L = 3.29 GRADIENT INTERVAL = -1.00/ 4.00

ALPHAO	DZ	MACH	DX	DY	BETAO	PHI	ALPHAW	BETA	CY	CLN	CSL
14.301	-2.363	.59980	8.18810	.38570	-5.22010	.00000	9.68140	.00420	.05180	.01900	.00330
14.539	-1.012	.60010	7.96770	.38570	-5.21720	.00000	9.68610	.00410	.05170	.01900	.00348
14.492	1.816	.60010	7.59820	.37440	-5.21070	.00000	9.68190	.00420	.05000	.01850	.00340
14.537	2.114	.60080	7.55200	.37380	-5.21060	.00000	9.68180	.00420	.04970	.01860	.00350
14.547	6.572	.60090	6.95140	.36650	-5.20600	.00000	9.67480	.01540	.04540	.01790	.00360
14.576	14.073	.59990	5.93050	.35460	-5.20440	.00000	9.67030	.01810	.04930	.01770	.00400
14.612	29.194	.60010	3.86470	.37730	-5.20900	.00000	9.65010	.01160	.05090	.01760	.00420
14.641	44.237	.60050	1.79770	.37490	-5.20970	.00000	9.65280	.01810	.05090	.01770	.00400
14.651	58.932	.59980	-.22740	.37670	-5.21130	.00000	9.64550	.01740	.05120	.01810	.00370
	GRADIENT	.00235	-.15493	-.00201	.00033	.00000	-.00033	.00000	-.00101	.00034	.00034

CA20 747/1 01 SI ORBITER DATA (CGN111) (20 JAN 75)

REFERENCE DATA

SREF =	2690.0000 SQ.FT.	XMRP =	1109.0000 IN.XO
LREF =	474.8100 IN.	YMRP =	.0000 IN.YO
BREF =	936.6800 IN.	ZMRP =	375.0000 IN.ZO
SCALE =	.0300		

PARAMETRIC DATA

ALPHAC =	4.000	BETAC =	.000
ELV-IB =	.000	ELV-OB =	3.000
ELEVON =	5.000	MACH =	.600
BETAO =	-5.000	PHI =	.000
DX =	.000	DY =	10.000

RUN NO. 843/ 0 RN/L = 3.33 GRADIENT INTERVAL = -1.00/ 4.00

ALPHAO	DZ	MACH	DX	DY	BETAO	PHI	ALPHAW	BETA	CY	CLN	CSL
10.446	-.843	.60040	.80510	10.38400	-5.24130	.00000	5.84880	.06030	.04730	.01730	-.00580
10.429	2.180	.59950	.59930	10.39070	-5.23930	.00000	5.84800	.05820	.04930	.01570	-.00470
10.422	6.658	.59940	.29520	10.38530	-5.23920	.00000	5.84290	.06270	.04870	.01590	-.00380
10.430	14.218	.59930	-.22540	10.38990	-5.24230	.00000	5.83930	.05110	.04860	.01630	-.00280
10.443	29.284	.60070	-1.25240	10.40340	-5.25400	.00000	5.82280	.05830	.04990	.01710	-.00130
10.450	44.292	.60010	-2.28280	10.41680	-5.26110	.00000	5.81300	.05180	.05150	.01750	-.00060
	GRADIENT	-.00030	-.06808	.00222	.00066	.00000	-.00026	-.00069	.00066	-.00053	.00036

CA20 747/1 01 S1 ORBITER DATA (CGN112) (20 JAN 75)

REFERENCE DATA

SREF =	2690.0000 SQ.FT.	XMRP =	1109.0000 IN.XO		
LREF =	474.8100 IN.	YMRP =	.0000 IN.YO		
BREF =	936.6900 IN.	ZMRP =	375.0000 IN.ZO		
SCALE =	.0300				

PARAMETRIC DATA

ALPHAC =	4.000	BETAC =	.000
ELV-IB =	.000	ELV-OB =	3.000
ELEVON =	5.000	MACH =	.600
BETAO =	-5.000	PHI =	.000
DX =	10.000	DY =	10.000

RUN NO. 818/ 0 RN/L = 3.27 GRADIENT INTERVAL = -1.00/ 4.00

ALPHAO	DZ	MACH	DX	DY	BETAO	PHI	ALPHAW	BETA	CY	CLN	CSL
10.351	-1.302	.59940	10.82050	10.31730	-5.21620	.00000	5.83140	.07500	.04750	.01700	-.00680
10.339	1.671	.60090	10.82210	10.32040	-5.21560	.00000	5.83320	.07410	.04820	.01620	-.00570
10.339	6.235	.60090	10.31230	10.31910	-5.21570	.00000	5.82900	.07090	.04790	.01620	-.00480
10.344	13.633	.60080	9.81000	10.31890	-5.21750	.00000	5.82270	.06730	.04750	.01650	-.00360
10.363	28.774	.60000	8.77700	10.32690	-5.22650	.00000	5.81020	.07450	.04900	.01720	-.00200
10.378	43.865	.60060	7.73840	10.34080	-5.23270	.00000	5.80630	.06750	.05060	.01730	-.00120
	GRADIENT	.00000	.00000	.00000	.00000	.00000	.00000	.00000	.00000	.00000	.00000

RUN NO. 821/ 0 RN/L = 3.24 GRADIENT INTERVAL = -1.00/ 4.00

ALPHAO	DZ	MACH	DX	DY	BETAO	PHI	ALPHAW	BETA	CY	CLN	CSL
14.674	1.871	.59920	9.44540	10.32750	-5.18870	.00000	5.85000	.03760	.04420	.01830	.00030
14.654	4.908	.60040	9.24120	10.33400	-5.18670	.00000	5.85920	.03530	.04600	.01670	.00100
14.651	9.491	.59950	8.92720	10.34080	-5.18670	.00000	5.85220	.01460	.04630	.01650	.00140
14.654	16.765	.60000	8.43190	10.34180	-5.18990	.00000	5.84220	.01970	.04670	.01670	.00210
14.662	31.845	.59930	7.40100	10.35010	-5.19990	.00000	5.82760	.00710	.04980	.01720	.00290
14.672	46.937	.59980	6.36530	10.36580	-5.20490	.00000	5.81740	.01960	.05020	.01760	.00270
14.669	61.691	.59950	5.35330	10.37880	-5.21170	.00000	5.80840	.02060	.05240	.01780	.00250
	GRADIENT	.00000	.00000	.00000	.00000	.00000	.00000	.00000	.00000	.00000	.00000

CA20 747/1 01 S1 ORBITER DATA (CGN113) (20 JAN 75)

REFERENCE DATA

SREF =	2690.0000 SQ.FT.	XMRP =	1109.0000 IN.XO		
LREF =	474.8100 IN.	YMRP =	.0000 IN.YO		
BREF =	936.6800 IN.	ZMRP =	375.0000 IN.ZO		
SCALE =	.0300				

PARAMETRIC DATA

ALPHAC =	8.000	BETAC =	.000
ELV-IB =	.000	ELV-OB =	3.000
ELEVON =	5.000	MACH =	.600
BETAO =	-5.000	PHI =	.000
DX =	.000	DY =	10.000

RUN NO. 846/ 0 RN/L = 3.27 GRADIENT INTERVAL = -1.00/ 4.00

ALPHAO	DZ	MACH	DX	DY	BETAO	PHI	ALPHAW	BETA	CY	CLN	CSL
14.663	-.234	.59920	-2.08110	10.45250	-5.22980	.00000	9.71210	.05500	.05780	.01630	-.00790
14.664	2.831	.59940	-2.49430	10.44140	-5.22280	.00000	9.70900	.05080	.05640	.01510	-.00510
14.673	7.169	.59980	-3.08220	10.42750	-5.21910	.00000	9.70290	.05560	.05420	.01500	-.00280
14.695	14.825	.60010	-4.12640	10.41340	-5.21700	.00000	9.69360	.04350	.05099	.01580	-.00060
14.718	29.804	.59910	-6.18250	10.41430	-5.22390	.00000	9.68120	.04930	.05040	.01690	.00140
14.736	44.793	.60010	-8.24780	10.42500	-5.23080	.00000	9.67210	.05230	.05150	.01720	.00210
14.745	59.569	.60000	-10.29910	10.44120	-5.24020	.00000	9.66970	.05370	.05360	.01780	.00190
	GRADIENT	.00007	-.13481	-.00362	.00228	.00000	-.00101	-.00137	-.00046	-.00039	.00091

CA20 747/1 01 S1 ORBITER DATA (CGN114) (28 AUG 75)

REFERENCE DATA

SREF =	2690.0000 SQ.FT.	XMRP =	1109.0000 IN.XO		
LREF =	474.8100 IN.	YMRP =	.0000 IN.YO		
BREF =	936.6800 IN.	ZMRP =	375.0000 IN.ZO		
SCALE =	.0300				

PARAMETRIC DATA

ALPHAC =	8.000	BETAC =	.000
ELV-IB =	.000	ELV-OB =	3.000
ELEVON =	5.000	MACH =	.600
BETAO =	-5.000	PHI =	.000
DX =	10.000	DY =	10.000

RUN NO. 827/ 0 RN/L = 3.23 GRADIENT INTERVAL = -1.00/ 4.00

ALPHAO	DZ	MACH	DX	DY	BETAO	PHI	ALPHAW	BETA	CY	CLN	CSL
10.123	-2.709	.59950	9.42810	10.35950	-5.22610	.00000	9.67390	.08450	.05730	.01520	-.01500
10.130	.522	.59900	8.99410	10.33760	-5.22180	.00000	9.67420	.09690	.05420	.01570	-.01290
10.153	4.892	.59920	8.39770	10.32390	-5.21740	.00000	9.67530	.09450	.05150	.01600	-.01120
10.189	12.431	.60030	7.36470	10.32290	-5.21670	.00000	9.67190	.07600	.04970	.01620	-.00890
10.262	27.432	.59980	5.29070	10.32470	-5.22390	.00000	9.66660	.08520	.04980	.01700	-.00560
10.293	42.263	.60050	3.24330	10.33450	-5.23260	.00000	9.66240	.09340	.05150	.01730	-.00380
	GRADIENT	.00000	.00000	.00000	.00000	.00000	.00000	.00000	.00000	.00000	.00000

CA20 747/1 01 S1 ORBITER DATA (CGN114) (28 AUG 75)

REFERENCE DATA

SREF =	2690.0000 SQ.FT.	XMRP =	1109.0000 IN.XO		
LREF =	474.8100 IN.	YMRP =	.0000 IN.YO		
BREF =	936.6800 IN.	ZMRP =	375.0000 IN.ZO		
SCALE =	.0300				

PARAMETRIC DATA

ALPHAC =	8.000	BETAC =	.000
ELV-IB =	.000	ELV-OB =	3.000
ELEVON =	5.000	MACH =	.600
BETAO =	-5.000	PHI =	.000
DX =	10.000	DY =	10.000

RUN NO. 824/ 0 RN/L = 3.23 GRADIENT INTERVAL = -1.00/ 4.00

ALPHAO	DZ	MACH	DX	DY	BETAO	PHI	ALPHAH	BETA	CY	CLN	CSL
14.536	-.449	.59930	7.69880	10.38610	-5.19730	.00000	9.70270	.02410	.05580	.01610	-.00830
14.541	2.724	.59930	7.47220	10.37240	-5.19280	.00000	9.69310	.03500	.05480	.01530	-.00600
14.551	7.181	.59920	6.88660	10.36200	-5.18910	.00000	9.69590	.02350	.05190	.01550	-.00390
14.577	14.625	.60030	5.85320	10.35510	-5.18960	.00000	9.68780	.01580	.05000	.01580	-.00140
14.616	29.549	.59900	3.88340	10.35630	-5.19630	.00000	9.67940	.01950	.04940	.01680	.00130
14.642	44.653	.60080	1.72210	10.36940	-5.20590	.00000	9.67220	.02160	.05090	.01740	.00220
14.647	59.369	.59980	-.31530	10.37680	-5.21140	.00000	9.66720	.02260	.05200	.01790	.00270
	GRADIENT	.00016	-.13446	-.00432	.00142	.00000	-.00113	.00344	-.00038	-.00025	.00072

CA20 747/1 01 S1 ORBITER DATA (CGN115) (20 JAN 75)

REFERENCE DATA

SREF =	2690.0000 SQ.FT.	XMRP =	1109.0000 IN.XO		
LREF =	474.8100 IN.	YMRP =	.0000 IN.YO		
BREF =	936.6800 IN.	ZMRP =	375.0000 IN ZO		
SCALE =	.0300				

PARAMETRIC DATA

ALPHAC =	4.000	BETAC =	5.000
ELV-IB =	.000	ELV-OB =	3.000
ELEVON =	5.000	MACH =	.600
BETAO =	-5.000	PHI =	.000
DX =	10.000	DY =	.000

RUN NO. 832/ 0 RN/L = 3.26 GRADIENT INTERVAL = -1.00/ 4.00

ALPHAO	DZ	MACH	DX	DY	BETAO	PHI	ALPHAH	BETA	CY	CLN	CSL
10.326	-1.459	.59910	10.60660	-1.58800	-5.24760	.00000	5.82090	5.05090	.06160	.01600	-.00960
10.310	1.577	.59950	10.60930	-1.60360	-5.24560	.00000	5.82130	5.04970	.05830	.01700	-.00690
10.308	6.160	.60020	10.30360	-1.62150	-5.24000	.00000	5.81960	5.05130	.05480	.01730	-.00530
10.316	13.701	.60050	9.79660	-1.63320	-5.23490	.00000	5.81300	5.04780	.05220	.01740	-.00350
10.331	28.714	.60090	8.77550	-1.63810	-5.23590	.00000	5.80800	5.05230	.05110	.01760	-.00140
10.344	43.809	.60030	7.74110	-1.64140	-5.23430	.00000	5.80240	5.04590	.05080	.01750	-.00100
	GRADIENT	.00000	.00000	.00000	.00000	.00000	.00000	.00000	.00000	.00000	.00000

CA20 747/1 01 SI ORBITER DATA (CON115) (20 JAN 75)

REFERENCE DATA

SREF = 2690.0000 SQ.FT. XMRP = 1109.0000 IN.XO
LREF = 474.8100 IN. YMRP = .0000 IN.YO
BREF = 936.6800 IN. ZMRP = 375.0000 IN.ZO
SCALE = .0300

PARAMETRIC DATA

ALPHAC = 4.000 BETAC = 5.000
ELV-IB = .000 ELV-OB = 3.000
ELEVON = 5.000 MACH = .600
BETAO = -5.000 PHI = .000
DX = 10.000 DY = .000

RUN NO. 833/ 0 RN/L = 3.28 GRADIENT INTERVAL = -1.00/ 4.00

ALPHAO	DZ	MACH	DX	DY	BETAO	PHI	ALPHAH	BETA	CY	CLN	CSL
14.703	.481	.59990	9.50420	-1.51150	-5.21160	.00000	5.83950	5.03250	.05270	.01820	.00020
14.674	3.583	.59940	9.30230	-1.49580	-5.21110	.00000	5.84040	5.03340	.05780	.01560	.00000
14.669	7.765	.60000	9.02180	-1.51040	-5.21030	.00000	5.84090	5.04940	.05510	.01650	.00100
14.666	15.725	.60050	8.48640	-1.51760	-5.20820	.00000	5.83410	5.04880	.05320	.01670	.00230
14.665	30.510	.59960	7.48080	-1.52620	-5.20760	.00000	5.82210	5.05330	.05230	.01710	.00230
14.670	45.572	.59990	6.45060	-1.52710	-5.20570	.00000	5.81350	5.04380	.05120	.01750	.00220
14.674	60.497	.59950	5.42680	-1.53350	-5.20860	.00000	5.80710	5.05660	.05070	.01810	.00280
	GRADIENT	-.00016	-.05508	.00506	.00016	.00000	.00029	.00190	.00164	-.00084	-.00006

CA20 747/1 01 SI ORBITER DATA (CON118) (20 JAN 75)

REFERENCE DATA

SREF = 2690.0000 SQ.FT. XMRP = 1109.0000 IN.XO
LREF = 474.8100 IN. YMRP = .0000 IN.YO
BREF = 936.6800 IN. ZMRP = 375.0000 IN.ZO
SCALE = .0300

PARAMETRIC DATA

ALPHAC = 8.000 BETAC = 5.000
ELV-IB = .000 ELV-OB = 3.000
ELEVON = 5.000 MACH = .600
BETAO = -5.000 PHI = .000
DX = 10.000 DY = .000

RUN NO. 839/ 0 RN/L = 3.28 GRADIENT INTERVAL = -1.00/ 4.00

ALPHAO	DZ	MACH	DX	DY	BETAO	PHI	ALPHAH	BETA	CY	CLN	CSL
10.294	-2.738	.59960	9.31160	-1.55500	-5.28470	.00000	9.65420	5.05110	.07020	.01950	-.01490
10.306	.352	.60000	8.90260	-1.59040	-5.27000	.00000	9.65590	5.04940	.06410	.01930	-.01170
10.320	3.098	.59990	8.53200	-1.61720	-5.25970	.00000	9.65370	5.05760	.06010	.01930	-.01030
10.367	12.333	.60060	7.27900	-1.64760	-5.24150	.00000	9.65120	5.04550	.05440	.01820	-.00690
10.428	27.414	.59940	5.21140	-1.66970	-5.23730	.00000	9.64660	5.05340	.05180	.01820	-.00360
10.473	42.599	.60060	3.11550	-1.66980	-5.23650	.00000	9.64210	5.05310	.05150	.01790	-.00210
	GRADIENT	-.00004	-.13496	-.00976	.00375	.00000	-.00080	.00299	-.00146	.00000	.00051

DATE 01 DEC 75 TABULATED SOURCE DATA - CA20

CA20 747/1 01 S1 ORBITER DATA (CGN116) (20 JAN 75)

REFERENCE DATA

SREF = 2690.0000 SQ.FT. XMRP = 1109.0000 IN.XO
LREF = 474.8100 IN. YMRP = .0000 IN.YO
BREF = 935.6900 IN. ZMRP = 375.0000 IN.ZO
SCALE = .0300

PARAMETRIC DATA

ALPHAC =	8.000	BETAC =	5.000
ELV-IB =	.000	ELV-OB =	3.000
ELEVON =	5.000	MACH =	.600
BETAO =	-5.000	PHI =	.000
DX =	10.000	DY =	.000

RUN NO. [illegible]/ 0 RN/L = 3.26 GRADIENT INTERVAL = -1.00/ 4.00

ALPHAO	DZ	MACH	DX	DY	BETAO	PHI	ALPHAW	BETA	CY	CLN	CSL
14.539	-1.194	.59950	7.95930	-1.44650	-5.24490	.00000	9.67820	5.04490	.07180	.01630	-.00650
14.540	1.941	.59950	7.54570	-1.48380	-5.23400	.00000	9.67800	5.04450	.06530	.01690	-.00350
14.553	6.274	.59940	6.96950	-1.51170	-5.22180	.00000	9.67420	5.04780	.06080	.01630	-.00110
14.[illegible]	13.735	.59950	5.95710	-1.55280	-5.21120	.00000	9.67180	5.06930	.05440	.01710	.00110
14.613	28.032	.59950	3.90000	-1.56200	-5.20860	.00000	9.66040	5.05950	.05190	.01740	.00300
14.[illegible]	43.855	.60040	1.83390	-1.57120	-5.20720	.00000	9.65590	5.06190	.05100	.01740	.00340
14.651	59.746	.60080	-.21020	-1.57450	-5.20980	.00000	9.64970	5.06760	.05070	.01790	.00340
	GRADIENT	.00000	.00000	.00000	.00000	.00000	.00000	.00000	.00000	.00000	.00000

CA20 747/1 01 S1 ORBITER DATA (CGN117) (20 JAN 75)

REFERENCE DATA

SREF = 2690.0000 SQ.FT. XMRP = 1109.0000 IN.XO
LREF = 474.8100 IN. YMRP = .0000 IN.YO
BREF = 935.6900 IN. ZMRP = 375.0000 IN.ZO
SCALE = .0300

PARAMETRIC DATA

ALPHAC =	4.000	BETAC =	5.000
ELV-IB =	.000	ELV-OB =	3.000
ELEVON =	5.000	MACH =	.600
BETAO =	-5.000	PHI =	.000
DX =	.000	DY =	10.000

RUN NO 645/ 0 RN/L = 3.29 GRADIENT INTERVAL = -1.00/ 4.00

ALPHAO	DZ	MACH	DX	DY	BETAO	PHI	ALPHAW	BETA	CY	CLN	CSL
10.493	-.906	.60040	.78870	9.22240	-5.21280	.00000	5.84530	5.04420	.05010	.01230	-.01360
10.467	2.237	.59980	.57730	9.23320	-5.22240	.00000	5.84150	5.04890	.05150	.01250	-.00980
10.441	6.513	.59920	.28940	9.22990	-5.23010	.00000	5.84000	5.05350	.05010	.01420	-.00710
10.439	14.233	.60090	-.23340	9.23800	-5.23900	.00000	5.82980	5.03800	.04960	.01530	-.00470
10.446	29.130	.59990	-1.25300	9.24510	-5.24980	.00000	5.81990	5.03760	.04970	.01680	-.00220
10.455	44.219	.59980	-2.29460	9.25700	-5.25780	.00000	5.81540	5.03750	.05120	.01720	-.00110
	GRADIENT	-.00019	-.06725	.00344	-.00305	.00000	-.00121	.00150	.00045	.00006	.00121

ORIGINAL PAGE IS OF POOR QUALITY

CA20 747/1 01 SI ORBITER DATA (CGN118) (20 JAN 75)

REFERENCE DATA

SREF = 2690.0000 SQ.FT. XMRP = 1109.0000 IN.XO
LREF = 474.8100 IN. YMRP = .0000 IN.YO
BREF = 936.6900 IN. ZMRP = 375.0000 IN.ZO
SCALE = .0300

PARAMETRIC DATA

ALPHAC =	4.000	BETAC =	5.000
ELV-IB =	.000	ELV-OB =	3.000
ELEVON =	5.000	MACH =	.600
BETAO =	-5.000	PHI =	.000
DX =	10.000	DY =	10.000

RUN NO. 817/ 0 RN/L = 3.28 GRADIENT INTERVAL = -1.00/ 4.00

ALPHAO	DZ	MACH	DX	DY	BETAO	PHI	ALPHAW	BETA	CY	CLN	CSL
10.387	-1.428	.60050	10.80850	8.27130	-5.19700	.00000	5.82810	5.09010	.04740	.01500	-.01500
10.368	1.603	.59990	10.60430	8.27890	-5.20120	.00000	5.83120	5.07890	.04800	.01480	-.01140
10.354	6.192	.59960	10.29750	8.27540	-5.20600	.00000	5.82650	5.09060	.04820	.01510	-.00850
10.352	13.627	.60060	9.79330	8.28270	-5.21310	.00000	5.82320	5.08370	.04820	.01580	-.00580
10.358	28.854	.60000	8.75340	8.29080	-5.22320	.00000	5.81190	5.08340	.04890	.01680	-.00300
10.375	43.802	.59950	7.72900	8.28670	-5.22860	.00000	5.80650	5.08390	.04980	.01720	-.00160
	GRADIENT	.00000	.00000	.00000	.00000	.00000	.00000	.00000	.00000	.00000	.00000

RUN NO. 822/ 0 RN/L = 3.25 GRADIENT INTERVAL = -1.00/ 4.00

ALPHAO	DZ	MACH	DX	DY	BETAO	PHI	ALPHAW	BETA	CY	CLN	CSL
14.717	1.874	.59970	9.42000	8.37420	-5.17810	.00000	5.85110	5.08930	.04410	.01820	-.00710
14.688	4.769	.59960	9.22800	8.37710	-5.17940	.00000	5.85100	5.09400	.04560	.01700	-.00410
14.674	9.382	.59990	8.91570	8.38120	-5.18320	.00000	5.84940	5.09720	.04680	.01630	-.00170
14.665	16.975	.59990	8.40160	8.38660	-5.18790	.00000	5.83980	5.08990	.04690	.01670	.00020
14.668	31.950	.59900	7.37290	8.39530	-5.19670	.00000	5.83260	5.09040	.04800	.01730	.00220
14.673	46.749	.60020	6.36980	8.40610	-5.20180	.00000	5.81470	5.08240	.04920	.01760	.00240
14.668	61.783	.60020	5.33720	8.41540	-5.20920	.00000	5.80610	5.09090	.05110	.01790	.00230
	GRADIENT	.00000	.00000	.00000	.00000	.00000	.00000	.00000	.00000	.00000	.00000

CA20 747/1 01 SI ORBITER DATA (CGN119) (20 JAN 75)

REFERENCE DATA

SREF = 2690.0000 SQ.FT. XMRP = 1109.0000 IN.XO
LREF = 474.8100 IN. YMRP = .0000 IN.YO
BREF = 935.6900 IN. ZMRP = 375.0000 IN.ZO
SCALE = .0300

PARAMETRIC DATA

ALPHAC =	8.000	BETAC =	5.000
ELV-IB =	.000	ELV-OB =	3.000
ELEVON =	5.000	MACH =	.600
BETAO =	-5.000	PHI =	.000
DX =	10.000	DY =	10.000

RUN NO. 826/ 0 RN/L = 3.24 GRADIENT INTERVAL = -1.00/ 4.00

ALPHAO	DZ	MACH	DX	DY	BETAO	PHI	ALPHAH	BETA	CY	CLN	CSL
10.232	-3.158	.59960	9.45520	8.21890	-5.17890	.00000	9.67640	5.11290	.04830	.01290	-.02380
10.221	-.170	.59930	9.04460	8.24760	-5.19470	.00000	9.67420	5.10090	.05220	.01300	-.01920
10.228	4.274	.60060	8.43850	8.25130	-5.20440	.00000	9.67370	5.10550	.05250	.01380	-.01560
10.086	8.076	.60080	8.00330	8.24320	-5.21030	.00000	9.67500	5.10510	.05180	.01460	-.01280
10.098	10.921	.60030	7.61260	8.24420	-5.21170	.00000	9.67450	5.09750	.05120	.01490	-.01150
10.159	26.257	.59990	5.50150	8.24330	-5.22100	.00000	9.66690	5.09620	.05000	.01640	-.00670
10.305	41.630	.59980	3.31110	8.25650	-5.22860	.00000	9.65440	5.09690	.05090	.01700	-.00430
	GRADIENT	.00000	.00000	.00000	.00000	.00000	.00000	.00000	.00000	.00000	.00000

RUN NO. 825/ 0 RN/L = 3.22 GRADIENT INTERVAL = -1.00/ 4.00

ALPHAO	DZ	MACH	DX	DY	BETAO	PHI	ALPHAH	BETA	CY	CLN	CSL
14.586	-.647	.59910	7.99360	8.38630	-5.17870	.00000	9.69920	5.10990	.05730	.01420	-.01690
14.574	2.288	.59900	7.50930	8.39730	-5.18080	.00000	9.69640	5.09010	.05590	.01410	-.01240
14.572	6.896	.60040	6.88610	8.37630	-5.18510	.00000	9.69580	5.10230	.05430	.01450	-.00800
14.589	14.523	.59960	5.84870	8.36390	-5.18680	.00000	9.69090	5.10280	.05160	.01510	-.00360
14.622	29.445	.59990	3.80460	8.35910	-5.19440	.00000	9.68180	5.09570	.04910	.01680	.00040
14.641	44.416	.59980	1.74040	8.36180	-5.20120	.00000	9.67480	5.10310	.04990	.01730	.00170
14.651	59.262	.60020	-.31430	8.37110	-5.20880	.00000	9.66940	5.10360	.05120	.01780	.00250
	GRADIENT	-.00003	-.13436	.00034	-.00072	.00000	-.00095	-.00675	-.00048	-.00003	.00153

CA20 747/1 01 SI ORBITER DATA (CGN120) (20 JAN 75)

REFERENCE DATA

SREF =	2690.0000 SQ.FT.	XMRP =	1109.0000 IN.XO
LREF =	474.8100 IN.	YMRP =	.0000 IN.YO
BREF =	936.6800 IN.	ZMRP =	375.0000 IN.ZO
SCALE =	.0300		

PARAMETRIC DATA

ALPHAC =	4.000	BETAC =	-5.000
ELV-IB =	.000	ELV-OB =	.000
ELEVON =	5.000	MACH =	.600
BETAO =	-5.000	PHI =	.000
DX =	.000	DY =	10.000

RUN NO. 765/ 0 RN/L = 3.26 GRADIENT INTERVAL = -1.00/ 4.00

ALPHAO	DZ	MACH	DX	DY	BETAO	PHI	ALPHAW	BETA	CY	CLN	CSL
10.515	-1.996	.60080	.84350	11.45910	-5.24180	.00000	5.87130	-4.98110	.04510	.01730	-.00020
10.489	1.101	.59950	.64030	11.44630	-5.23360	.00000	5.86780	-4.98920	.04350	.01690	-.00010
10.487	5.644	.60040	.31530	11.45310	-5.23550	.00000	5.86370	-4.98810	.04420	.01680	-.00030
10.491	13.003	.59970	-.17740	11.46190	-5.23990	.00000	5.85710	-4.98220	.04580	.01680	-.00040
10.505	28.256	.60020	-1.23080	11.48620	-5.25290	.00000	5.84900	-4.99070	.04860	.01740	.00010
10.512	43.053	.60090	-2.24980	11.50370	-5.26170	.00000	5.83960	-4.99000	.05050	.01750	.00040
10.515	46.935	.59980	-2.51800	11.50600	-5.26380	.00000	5.83580	-4.98180	.05160	.01760	.00030
	GRADIENT	.00000	.00000	.00000	.00000	.00000	.00000	.00000	.00000	.00000	.00000

RUN NO. 768/ 0 RN/L = 3.24 GRADIENT INTERVAL = -1.00/ 4.00

ALPHAO	DZ	MACH	DX	DY	BETAO	PHI	ALPHAW	BETA	CY	CLN	CSL
14.817	.070	.60020	-.31490	11.36860	-5.21580	.00000	5.90170	-4.98100	.04230	.01930	.00270
14.790	3.179	.60040	-.52360	11.37120	-5.20690	.00000	5.89430	-4.97990	.04400	.01730	.00230
14.781	7.513	.60080	-.82800	11.38430	-5.21010	.00000	5.89240	-4.98870	.04640	.01640	.00130
14.780	9.056	.60090	-.93650	11.38910	-5.21080	.00000	5.89280	-4.98120	.04660	.01640	.00110
14.776	15.044	.59940	-1.35410	11.39230	-5.21500	.00000	5.89410	-4.98340	.04790	.01670	.00070
14.778	30.013	.59960	-2.39160	11.42080	-5.22890	.00000	5.88850	-4.99850	.05160	.01730	-.00010
14.777	44.971	.60010	-3.42780	11.43380	-5.23760	.00000	5.88800	-4.98540	.05320	.01790	.00000
14.777	60.036	.60070	-4.47510	11.45160	-5.24820	.00000	5.88010	-4.98230	.05540	.01840	.00030
	GRADIENT	.00006	-.06713	.00084	.00222	.00000	-.00238	.00035	.00055	-.00064	-.00013

CA20 747/1 01 S1 ORBITER DATA (CGN121) (20 JAN 75)

REFERENCE DATA

SREF = 2690.0000 SQ.FT. XMRP = 1109.0000 IN.XO
LREF = 474.8100 IN. YMRP = .0000 IN.YO
BREF = 936.6800 IN. ZMRP = 375.0000 IN.ZO
SCALE = .0300

PARAMETRIC DATA

ALPHAC =	8.000	BETAC =	-5.000
ELV-IB =	.000	ELV-OB =	.000
ELEVON =	5.000	MACH =	.600
BETAO =	-5.000	PHI =	.000
DX =	.000	DY =	10.000

RUN NO. 766/ 0 RN/L = 3.25 GRADIENT INTERVAL = -1.00/ 4.00

ALPHAO	DZ	MACH	DX	DY	BETAO	PHI	ALPHAW	BETA	CY	CLN	CSL
10.296	-3.648	.60030	-.59030	11.55550	-5.26430	.00000	9.75040	-4.98270	.05570	.01670	-.00660
10.312	-.567	.60080	-.99740	11.51870	-5.24420	.00000	9.74600	-4.98880	.04970	.01650	-.00680
10.352	4.042	.60030	-1.63380	11.50050	-5.23340	.00000	9.74400	-4.98900	.04720	.01600	-.00670
10.398	11.503	.60030	-2.66550	11.49930	-5.23310	.00000	9.73990	-4.99020	.04660	.01610	-.00570
10.447	28.756	.59940	-4.78130	11.52080	-5.24770	.00000	9.73480	-4.98150	.04910	.01700	-.00340
10.474	41.500	.60020	-6.83220	11.53820	-5.25820	.00000	9.72930	-4.97300	.05120	.01730	-.00190
10.480	46.724	.59970	-7.56360	11.54730	-5.26270	.00000	9.72760	-4.99040	.05220	.01750	-.00170
	GRADIENT	.00000	.00000	.00000	.00000	.00000	.00000	.00000	.00000	.00000	.00000

RUN NO. 767/ 0 RN/L = 3.24 GRADIENT INTERVAL = -1.00/ 4.00

ALPHAO	DZ	MACH	DX	DY	BETAO	PHI	ALPHAW	BETA	CY	CLN	CSL
14.680	-1.559	.60050	-1.92420	11.43940	-5.22370	.00000	9.78050	-4.97870	.04970	.01760	-.00110
14.680	1.597	.60010	-2.35280	11.42690	-5.20980	.00000	9.77830	-4.98750	.04860	.01570	-.00050
14.688	5.926	.59990	-2.94660	11.41730	-5.20470	.00000	9.77290	-4.98780	.04700	.01550	.00000
14.707	13.492	.60040	-3.98700	11.41840	-5.20750	.00000	9.75940	-4.98580	.04670	.01600	.00050
14.735	28.283	.59950	-6.03700	11.44460	-5.22150	.00000	9.74920	-4.98790	.04990	.01660	.00140
14.751	43.438	.59960	-8.14790	11.46360	-5.23100	.00000	9.74110	-4.98370	.05230	.01710	.00080
14.755	58.184	.60040	-10.20510	11.48640	-5.24360	.00000	9.73190	-4.98890	.05470	.01790	.00070
	GRADIENT	.00000	.00000	.00000	.00000	.00000	.00000	.00000	.00000	.00000	.00000

CA20 747/1 01 S1 ORBITER DATA (CON122) (20 JAN 75)

REFERENCE DATA

SREF =	2690.0000 SQ.FT.	XMRP =	1109.0000 IN.XO		
LREF =	474.8100 IN.	YMRP =	.0000 IN.YO		
BREF =	936.6800 IN.	ZMRP =	375.0000 IN.ZO		
SCALE =	.0300				

PARAMETRIC DATA

ALPHAC =	4.000	BETAC =	.000
ELV-IB =	.000	ELV-OB =	.000
ELEVON =	5.000	MACH =	.600
BETAO =	-5.000	PHI =	.000
DX =	.000	DY =	10.000

RUN NO. 761/ 0 RN/L = 3.32 GRADIENT INTERVAL = -1.00/ 4.00

ALPHAO	DZ	MACH	DX	DY	BETAO	PHI	ALPHAW	BETA	CY	CLN	CSL
10.533	-1.760	.60020	.83720	10.39810	-5.23790	.00000	5.87650	-.00910	.04720	.01660	-.00520
10.518	1.242	.60000	.63340	10.40180	-5.23580	.00000	5.87280	-.01120	.04840	.01530	-.00400
10.511	5.718	.60020	.32860	10.40050	-5.23670	.00000	5.86530	-.01460	.04790	.01560	-.00320
10.517	13.048	.59950	-.17620	10.40330	-5.24020	.00000	5.85710	-.01870	.04810	.01600	-.00220
10.529	28.455	.60000	-1.23960	10.41620	-5.25120	.00000	5.84810	-.01200	.04950	.01680	-.00070
10.535	43.071	.60080	-2.24820	10.43250	-5.26010	.00000	5.84030	-.01840	.05120	.01720	-.00020
10.533	47.085	.60070	-2.52230	10.43510	-5.26270	.00000	5.83630	-.01030	.05180	.01730	-.00010
	GRADIENT	.00000	.00000	.00000	.00000	.00000	.00000	.00000	.00000	.00000	.00000

RUN NO. 764/ 0 RN/L = 3.26 GRADIENT INTERVAL = -1.00/ 4.00

ALPHAO	DZ	MACH	DX	DY	BETAO	PHI	ALPHAW	BETA	CY	CLN	CSL
14.817	.178	.60040	-.29330	10.38910	-5.21580	.00000	5.90850	-.00220	.04250	.01970	.00070
14.797	3.067	.60070	-.49760	10.40960	-5.21220	.00000	5.90420	-.01100	.04750	.01640	.00030
14.787	7.581	.59930	-.81630	10.41730	-5.21290	.00000	5.89670	-.01520	.04930	.01580	.00000
14.780	15.133	.59990	-1.34110	10.42580	-5.21580	.00000	5.88060	-.01750	.05070	.01590	-.00180
14.773	29.995	.59930	-2.37300	10.44100	-5.22670	.00000	5.86560	-.01600	.05270	.01700	-.00230
14.775	45.089	.60000	-3.41890	10.45180	-5.23340	.00000	5.85390	-.01260	.05390	.01730	-.00210
14.771	60.069	.60020	-4.45590	10.47380	-5.24560	.00000	5.84420	-.01110	.05680	.01790	-.00230
	GRADIENT	.00010	-.07072	.00710	.00125	.00000	-.00149	-.00305	.00173	-.00114	-.00014

CA20 7X7/1 01 SI ORBITER DATA (CGN123) (20 JAN 75)

REFERENCE DATA

SREF = 2690.0000 SQ.FT. XMRP = 1109.0000 IN.XO
LREF = 474.8100 IN. YMRP = .0000 IN.YO
BREF = 936.6800 IN. ZMRP = 375.0000 IN.ZO
SCALE = .0300

PARAMETRIC DATA

ALPHAC =	8.000	BETAC =	.000
ELV-IB =	.000	ELV-OB =	.000
ELEVON =	5.000	MACH =	.600
BETAO =	-5.000	PHI =	.000
DX =	.000	DY =	10.000

RUN NO. 762/ 0 RN/L = 3.28 GRADIENT INTERVAL = -1.00/ 4.00

ALPHAO	DZ	MACH	DX	DY	BETAO	PHI	ALPHAH	BETA	CY	CLN	CSL
10.341	-3.606	.60010	-.58610	10.45990	-5.25020	.00000	9.74490	-.00690	.05930	.01380	-.01470
10.346	-.403	.59980	-1.02000	10.44290	-5.24670	.00000	9.74800	-.01040	.05610	.01460	-.01210
10.375	5.542	.60010	-1.83100	10.41910	-5.23990	.00000	9.74280	-.01460	.05170	.01520	-.00940
10.411	11.472	.60010	-2.65140	10.41120	-5.23870	.00000	9.73990	-.01770	.05010	.01560	-.00750
10.469	26.651	.59920	-4.75740	10.41420	-5.24700	.00000	9.73260	-.00880	.04930	.01660	-.00400
10.496	41.661	.59930	-6.83220	10.42860	-5.25710	.00000	9.72730	-.00810	.05140	.01710	-.00220
10.503	46.845	.60020	-7.56930	10.43080	-5.25900	.00000	9.72580	-.00790	.05150	.01720	-.00170
	GRADIENT	.00000	.00000	.00000	.00000	.00000	.00000	.00000	.00000	.00000	.00000

RUN NO. 763/ 0 RN/L = 3.28 GRADIENT INTERVAL = -1.00/ 4.00

ALPHAO	DZ	MACH	DX	DY	BETAO	PHI	ALPHAH	BETA	CY	CLN	CSL
14.689	-1.516	.60080	-1.91500	10.45980	-5.22780	.00000	9.77730	-.00670	.05610	.01660	-.00790
14.691	2.914	.60020	-2.51930	10.44440	-5.21870	.00000	9.77300	-.01230	.05440	.01500	-.00420
14.699	7.487	.59980	-3.14690	10.42920	-5.21400	.00000	9.76670	-.00730	.05210	.01500	-.00230
14.711	13.631	.59930	-3.89910	10.41880	-5.21290	.00000	9.75730	-.01900	.04960	.01580	-.00050
14.742	28.443	.59990	-6.03760	10.42940	-5.22190	.00000	9.74450	-.02910	.05000	.01660	.00140
14.754	43.346	.60010	-8.11400	10.44480	-5.22970	.00000	9.73780	-.01780	.05250	.01680	.00030
14.753	58.323	.60020	-10.20620	10.46770	-5.24130	.00000	9.72950	-.00890	.05610	.01740	-.00170
	GRADIENT	.00000	.00000	.00000	.00000	.00000	.00000	.00000	.00000	.00000	.00000

CA20 747/1 01 SI ORBITER DATA (CGN124) (20 JAN 75)

REFERENCE DATA

SREF =	2690.0000 SQ.FT.	XMRP =	1109.0000 IN.XO
LREF =	474.8100 IN.	YMRP =	.0000 IN.YO
BREF =	936.6800 IN.	ZMRP =	375.0000 IN.ZO
SCALE =	.0300		

PARAMETRIC DATA

ALPHAC =	4.000	BETAC =	5.000
ELV-IB =	.000	ELV-OB =	.000
ELEVON =	5.000	MACH =	.600
BETAO =	-5.000	PHI =	.000
DX =	.000	DY =	10.000

RUN NO. 769/ 0 RN/L = 3.24 GRADIENT INTERVAL = -1.00/ 4.00

ALPHAO	DZ	MACH	DX	DY	BETAO	PHI	ALPHAW	BETA	CY	CLN	CSL
10.551	-1.968	.60050	.84330	9.22610	-5.20960	.00000	5.87540	5.00580	.04890	.01220	-.01270
10.533	1.261	.60040	.62320	9.23700	-5.21850	.00000	5.87370	5.00280	.05000	.01240	-.00910
10.511	5.843	.60050	.31090	9.24170	-5.22710	.00000	5.87190	4.99430	.04890	.01400	-.00640
10.506	13.217	.60020	-.19490	9.24420	-5.23460	.00000	5.86400	4.99420	.04840	.01510	-.00400
10.514	28.279	.59950	-1.23590	9.25270	-5.24690	.00000	5.85360	4.99140	.04890	.01650	-.00160
10.514	42.986	.59930	-2.25500	9.26120	-5.25480	.00000	5.84920	4.99910	.05020	.01710	-.00060
10.518	46.942	.59980	-2.52760	9.26360	-5.25640	.00000	5.84540	4.99920	.05040	.01710	-.00040
	GRADIENT	.00000	.00000	.00000	.00000	.00000	.00000	.00000	.00000	.00000	.00000

RUN NO. 772/ 0 RN/L = 3.23 GRADIENT INTERVAL = -1.00/ 4.00

ALPHAO	DZ	MACH	DX	DY	BETAO	PHI	ALPHAW	BETA	CY	CLN	CSL
14.954	.809	.60000	-.36940	9.30510	-5.19510	.00000	5.90150	4.99800	.04170	.01830	-.00530
14.915	4.128	.59920	-.59930	9.32970	-5.20000	.00000	5.89450	4.99270	.04660	.01580	-.00240
14.889	10.532	.60080	-1.07290	9.34180	-5.20770	.00000	5.88800	4.99680	.04840	.01560	-.00080
14.877	18.691	.60050	-1.60570	9.35210	-5.21430	.00000	5.87640	4.99090	.04930	.01620	-.00060
14.871	33.530	.60040	-2.63080	9.36710	-5.22520	.00000	5.85960	4.98910	.05100	.01710	.00000
14.867	48.582	.60010	-3.67260	9.37470	-5.23120	.00000	5.84820	4.98940	.05180	.01770	.00010
14.860	63.797	.59940	-4.73190	9.39310	-5.24340	.00000	5.84160	4.99840	.05440	.01840	.00040
	GRADIENT	.00000	.00000	.00000	.00000	.00000	.00000	.00000	.00000	.00000	.00000

ORIGINAL PAGE IS
OF POOR QUALITY

CA20 747/1 01 S1 ORBITER DATA (CGN125) (20 JAN 75)

REFERENCE DATA

SREF = 2690.0000 SQ.FT. XMRP = 1109.0000 IN.XO
LREF = 474.8100 IN. YMRP = .0000 IN.YO
BREF = 936.6800 IN. ZMRP = 375.0000 IN.ZO
SCALE = .0300

PARAMETRIC DATA

ALPHAC = 8.000 BETAC = 5.000
ELV-IB = .000 ELV-OB = .000
ELEVON = 5.000 MACH = .600
BETAO = -5.000 PHI = .000
DX = .000 DY = 10.000

RUN NO. 770/ 0 RN/L = 3.23 GRADIENT INTERVAL = -1.00/ 4.00

ALPHAO	DZ	MACH	DX	DY	BETAO	PHI	ALPHAW	BETA	CY	CLN	CSL
10.389	-3.483	.59990	-.59100	9.18540	-5.19210	.00000	9.73970	5.00480	.05050	.01010	-.02230
10.384	-.384	.60040	-1.01940	9.20850	-5.21240	.00000	9.73710	5.00040	.05240	.01160	-.01740
10.376	4.046	.59980	-1.62970	9.20920	-5.22250	.00000	9.73610	5.00530	.05150	.01310	-.01340
10.412	11.707	.59980	-2.68850	9.21350	-5.23110	.00000	9.73280	4.98650	.05040	.01440	-.00930
10.454	26.499	.59960	-4.73520	9.21380	-5.24260	.00000	9.72830	4.99510	.04950	.01610	-.00490
10.479	41.497	.59910	-6.81820	9.22210	-5.25140	.00000	9.72080	4.99590	.05040	.01690	-.00260
10.486	46.759	.59950	-7.55090	9.22410	-5.25460	.00000	9.71940	5.00350	.05070	.01700	-.00210
	GRADIENT	.00000	.00000	.00000	.00000	.00000	.00000	.00000	.00000	.00000	.00000

RUN NO. 771/ 0 RN/L = 3.23 GRADIENT INTERVAL = -1.00/ 4.00

ALPHAO	DZ	MACH	DX	DY	BETAO	PHI	ALPHAW	BETA	CY	CLN	CSL
14.823	-.884	.59960	-2.03280	9.33230	-5.19580	.00000	9.76760	5.01150	.05570	.01360	-.01610
14.797	1.955	.60050	-2.41590	9.34470	-5.20380	.00000	9.76340	4.99810	.05690	.01300	-.01120
14.791	6.399	.59990	-3.02280	9.33420	-5.20750	.00000	9.75880	4.99440	.05430	.01390	-.00650
14.798	14.059	.60070	-4.07020	9.31890	-5.21020	.00000	9.74920	5.00170	.05100	.01500	-.00240
14.819	28.847	.59990	-6.12930	9.31700	-5.21810	.00000	9.74410	4.99360	.04950	.01650	.00070
14.842	43.761	.60020	-8.18550	9.32610	-5.22580	.00000	9.73320	5.00170	.05100	.01690	.00120
14.847	59.029	.59990	-10.31650	9.34040	-5.23500	.00000	9.72670	5.00260	.05290	.01760	.00090
	GRADIENT	.00032	-.13493	.00437	-.00282	.00000	-.00148	-.00472	.00042	-.00021	.00173

CA20 747/1 02 S1 ORBITER DATA (CGN126) (29 AUG 75)

REFERENCE DATA

SREF = 2690.0000 SQ.FT. XMRP = 1109.0000 IN.XO
LREF = 474.8100 IN. YMRP = .0000 IN.YO
BREF = 936.6800 IN. ZMRP = 375.0000 IN.ZO
SCALE = .0300

PARAMETRIC DATA

ALPHAC = 4.000 BETAC = -5.000
ELV-IB = .000 ELV-OB = 3.000
ELEVON = 5.000 MACH = .600
BETAO = .000 PHI = .000
DX = .000 DY = .000

RUN NO. 656/ 0 RN/L = 3 29 GRADIENT INTERVAL = -1.00/ 4.00

ALPHAO	DZ	MACH	DX	DY	BETAO	PHI	ALPHAW	BETA	CY	CLN	CSL
10.466	-1.096	.60040	10.78960	1.93190	.02640	.00000	5.87110	-4.99100	-.01000	-.00060	.00500
10.459	2.127	.59920	10.55940	1.94420	.01790	.00000	5.87110	-4.97960	-.00770	.00020	.00240
10.459	6.620	.60000	10.26250	1.96080	.01060	.00000	5.86390	-4.98600	-.00560	.00070	.00110
10.464	14.115	.59980	9.74740	1.97410	.00250	.00000	5.85590	-4.97810	-.00300	.00110	-.00010
10.475	29.115	.59940	8.71410	1.99380	-.00590	.00000	5.84530	-4.98080	.00030	.00110	-.00120
10.481	44.160	.59950	7.67070	2.00190	-.00610	.00000	5.84030	-4.98900	.00130	.00080	-.00200
10.485	48.200	.59920	7.39520	2.00180	-.00510	.00000	5.83410	-4.98750	.00130	.00090	-.00200
	GRADIENT	.00000	.00000	.00000	.00000	.00000	.00000	.00000	.00000	.00000	.00000

CA20 747/1 02 S1 ORBITER DATA (CGN127) (20 JAN 75)

REFERENCE DATA

SREF = 2690.0000 SQ.FT. XMRP = 1109.0000 IN.XO
LREF = 474.8100 IN. YMRP = .0000 IN.YO
BREF = 936.6800 IN. ZMRP = 375.0000 IN.ZO
SCALE = .0300

PARAMETRIC DATA

ALPHAC = 4.000 BETAC = -5.000
ELV-IB = .000 ELV-OB = 3.000
ELEVON = 5.000 MACH = .600
BETAO = .000 PHI = .000
DX = 10.000 DY = .000

RUN NO. 657/ 0 RN/L = 3.34 GRADIENT INTERVAL = -1.00/ 4.00

ALPHAO	DZ	MACH	DX	DY	BETAO	PHI	ALPHAW	BETA	CY	CLN	CSL
10.433	-1.292	.59920	10.78030	1.92340	.02690	.00000	5.86290	-4.96760	-.00930	-.00110	.00550
10.431	1.807	.59920	10.57160	1.93720	.01910	.00000	5.86170	-4.96380	-.00730	-.00030	.00310
10.433	6.229	.60000	10.27180	1.94970	.01210	.00000	5.85780	-4.95200	-.00550	.00030	.00150
10.444	14.070	.60000	9.73470	1.96260	.00440	.00000	5.85180	-4.95390	-.00300	.00070	.00000
10.465	28.827	.59930	8.71920	1.97690	-.00320	.00000	5.84330	-4.95700	-.00020	.00090	-.00120
10.477	43.949	.59940	7.67520	1.99260	-.00450	.00000	5.83720	-4.97220	.00110	.00060	-.00200
10.478	48.212	.59990	7.39180	1.99180	-.00550	.00000	5.83600	-4.96410	.00140	.00070	-.00220
	GRADIENT	.00000	.00000	.00000	.00000	.00000	.00000	.00000	.00000	.00000	.00000

CA20 747/1 02 SI ORBITER DATA (CON129) (20 JAN 75)

REFERENCE DATA

SREF = 2690.0000 SQ.FT. XMRP = 1109.0000 IN.XO
LREF = 474.8100 IN. YMRP = .0000 IN.YO
BREF = 936.6800 IN. ZMRP = 375.0000 IN.ZO
SCALE = .0300

PARAMETRIC DATA

ALPHAC = 4.000 BETAC = -5.000
ELV-IB = .000 ELV-OB = 3.000
ELEVON = 5.000 MACH = .600
BETAO = .000 PHI = .000
DX = 20.000 DY = .000

RUN NO. 669/ 0 RN/L = 3.32 GRADIENT INTERVAL = -1.00/ 4.00

ALPHAO	DZ	MACH	DX	DY	BETAO	PHI	ALPHAH	BETA	CY	CLN	CSL
10.338	-1.706	.59920	20.78390	2.80120	.02290	.00000	5.84610	-4.97720	-.00980	-.00100	.00710
10.333	1.490	.59930	20.57030	2.80850	.01620	.00000	5.84520	-4.98530	-.00780	-.00020	.00430
10.348	5.895	.59930	20.26620	2.82240	.00870	.00000	5.84260	-4.98280	-.00510	.00030	.00240
10.368	13.450	.59940	19.75050	2.84000	.00250	.00000	5.83790	-4.97010	-.00270	.00070	.00070
10.383	28.424	.60060	18.72420	2.84590	-.00400	.00000	5.83120	-4.95760	.00000	.00090	-.00070
10.396	43.434	.59980	17.69220	2.86070	-.00470	.00000	5.82390	-4.97340	.00110	.00070	-.00160
10.401	48.251	.60010	17.35740	2.86070	-.00700	.00000	5.82450	-4.96530	.00190	.00090	-.00190
	GRADIENT	.00000	.00000	.00000	.00000	.00000	.00000	.00000	.00000	.00000	.00000

CA20 747/1 02 SI ORBITER DATA (CON129) (20 JAN 75)

REFERENCE DATA

SREF = 2690.0000 SQ.FT. XMRP = 1109.0000 IN.XO
LREF = 474.8100 IN. YMRP = .0000 IN.YO
BREF = 936.6800 IN. ZMRP = 375.0000 IN.ZO
SCALE = .0300

PARAMETRIC DATA

ALPHAC = 4.000 BETAC = .000
ELV-IB = .000 ELV-OB = 3.000
ELEVON = 5.000 MACH = .600
BETAO = .000 PHI = .000
DX = .000 DY = .000

RUN NO. 652/ 0 RN/L = 3.31 GRADIENT INTERVAL = -1.00/ 4.00

ALPHAO	DZ	MACH	DX	DY	BETAO	PHI	ALPHAH	BETA	CY	CLN	CSL
10.500	-.437	.60030	.77380	-.01920	.00560	.00000	5.87480	.06740	-.00190	.00070	-.00370
10.491	2.659	.59970	.56060	-.01970	.00480	.00000	5.87310	.05460	-.00170	.00070	-.00330
10.491	7.176	.60030	.25130	-.01390	.00350	.00000	5.86650	.03860	-.00140	.00070	-.00300
10.496	14.694	.59940	-.[illegible]210	-.01610	.00270	.00000	5.85330	.05350	-.00130	.00070	-.00270
10.508	26.858	.59930	-1.10100	-.00610	-.00180	.00000	5.84700	.04480	-.00010	.00080	-.00240
10.510	29.527	.59940	-1.28250	-.00180	-.00280	.00000	5.84330	.03710	.00030	.00080	-.00240
10.521	44.750	.59910	-2.33460	-.00040	-.00350	.00000	5.83550	.04500	.00090	.00060	-.00270
10.524	48.090	.60070	-2.56460	.00190	-.00470	.00000	5.83420	.04510	.00120	.00070	-.00270
	GRADIENT	-.00019	-.06887	-.00016	-.00026	.00000	-.00055	.00233	.00006	.00000	.00013

CA20 747/1 02 S1 ORBITER DATA (CGN129) (20 JAN 75)

REFERENCE DATA

SREF =	2690.0000 SQ.FT.	XMRP =	1109.0000 IN.XO		
LREF =	474.8100 IN.	YMRP =	.0000 IN.YO		
BREF =	936.6800 IN.	ZMRP =	375.0000 IN.ZO		
SCALE =	.0300				

PARAMETRIC DATA

ALPHAC =	4.000	BETAC =	.000
ELV-IB =	.000	ELV-OB =	3.000
ELEVON =	5.000	MACH =	.600
BETAO =	.000	PHI =	.000
DX =	.000	DY =	.000

RUN NO. 653/ 0 RN/L = . 3.29 GRADIENT INTERVAL = -1.00/ 4.00

ALPHAO	DZ	MACH	DX	DY	BETAO	PHI	ALPHAW	BETA	CY	CLN	CSL
14.760	1.601	.60030	-.37590	-.00820	-.00010	.00000	5.90450	.03130	-.00120	.00120	-.00210
14.750	4.801	.60000	-.60190	-.00730	-.00160	.00000	5.89740	.04580	-.00050	.00110	-.00220
14.743	9.200	.59960	-.90970	-.00670	-.00130	.00000	5.89170	.04590	-.00030	.00100	-.00220
14.738	16.514	.59900	-1.41430	-.00350	-.00310	.00000	5.87580	.05400	.00050	.00090	-.00230
14.739	31.658	.59910	-2.45150	.01100	-.00700	.00000	5.85960	.03740	.00240	.00060	-.00270
14.741	46.575	.59980	-3.49040	.01400	-.00920	.00000	5.84790	.04480	.00310	.00070	-.00280
14.736	61.537	.59920	-4.52810	.02380	-.01480	.00000	5.84020	.04460	.00430	.00100	-.00280
	GRADIENT	.00000	.00000	.00000	.00000	.00000	.00000	.00000	.00000	.00000	.00000

CA20 747/1 02 S1 ORBITER DATA (CGN130) (20 JAN 75)

REFERENCE DATA

SREF =	2690.0000 SQ.FT.	XMRP =	1109.0000 IN.XO		
LREF =	474.8100 IN.	YMRP =	.0000 IN.YO		
BREF =	936.6800 IN.	ZMRP =	375.0000 IN.ZO		
SCALE =	.0300				

PARAMETRIC DATA

ALPHAC =	4.000	BETAC =	.000
ELV-IB =	.000	ELV-OB =	3.000
ELEVON =	5.000	MACH =	.600
BETAO =	.000	PHI =	.000
DX =	10.000	DY =	.000

RUN NO. 661/ 0 RN/L = 3.30 GRADIENT INTERVAL = -1.00/ 4.00

ALPHAO	DZ	MACH	DX	DY	BETAO	PHI	ALPHAW	BETA	CY	CLN	CSL
10.416	-1.295	.59950	10.81230	-.00590	.00540	.00000	5.86600	.00120	-.00220	.00060	-.00360
10.413	1.696	.59980	10.60770	-.00370	.00510	.00000	5.86550	.00080	-.00180	.00060	-.00330
10.418	6.294	.59950	10.29140	-.00080	.00360	.00000	5.86130	.00010	-.00140	.00060	-.00310
10.427	13.796	.59900	9.77720	-.00180	.00220	.00000	5.85460	.00730	-.00110	.00070	-.00280
10.446	28.832	.59940	8.74400	.00980	-.00260	.00000	5.84380	-.00150	.00020	.00080	-.00240
10.459	43.886	.59950	7.71030	.00770	-.00200	.00000	5.83270	.00640	.00060	.00060	-.00270
10.460	48.115	.59900	7.41160	.01090	-.00390	.00000	5.83590	.00630	.00110	.00070	-.00280
	GRADIENT	.00000	.00000	.00000	.00000	.00000	.00000	.00000	.00000	.00000	.00000

CA20 747/1 02 SI ORBITER DATA (CGN130) (20 JAN 75)

REFERENCE DATA

SREF = 2690.0000 SQ.FT. XMRP = 1109.0000 IN.XO
LREF = 474.8100 IN. YMRP = .0000 IN.YO
BREF = 936.6800 IN. ZMRP = 375.0000 IN.ZO
SCALE = .0300

PARAMETRIC DATA

ALPHAC =	4.000	BETAC =	.000
ELV-1B =	.000	ELV-0B =	3.000
ELEVON =	5.000	MACH =	.600
BETAO =	.000	PHI =	.000
DX =	10.000	DY =	.000

RUN NO. 659/ 0 RN/L = 3.31 GRADIENT INTERVAL = -1.00/ 4.00

ALPHAO	DZ	MACH	DX	DY	BETAO	PHI	ALPHAW	BETA	CY	CLN	CSL
14.654	1.473	.59920	9.49420	.00240	-.00220	.00000	5.89550	-.01400	-.00280	.00230	-.00160
14.652	4.659	.59970	9.28000	-.00770	-.00200	.00000	5.89380	.00780	-.00310	.00220	-.00070
14.654	9.090	.60080	8.97090	-.00540	-.00190	.00000	5.89430	-.00040	-.00330	.00280	.00020
14.654	16.527	.59930	8.45720	-.00110	-.00280	.00000	5.87540	-.00060	-.00240	.00160	.00060
14.662	31.535	.59920	7.42330	.01230	-.00790	.00000	5.86060	.00650	.00080	.00120	-.00060
14.669	46.582	.60060	6.38510	.01520	-.00730	.00000	5.85040	-.00160	.00090	.00110	-.00080
14.666	61.600	.59930	5.35300	.02020	-.01170	.00000	5.84130	.00630	.00210	.00130	-.00090
	GRADIENT	.00000	.00000	.00000	.00000	.00000	.00000	.00000	.00000	.00000	.00000

CA20 747/1 02 SI ORBITER DATA (CGN131) (20 JAN 75)

REFERENCE DATA

SREF = 2690.0000 SQ.FT. XMRP = 1109.0000 IN.XO
LREF = 474.8100 IN. YMRP = .0000 IN.YO
BREF = 936.6800 IN. ZMRP = 375.0000 IN.ZO
SCALE = .0300

PARAMETRIC DATA

ALPHAC =	4.000	BETAC =	.000
ELV-1B =	.000	ELV-0B =	3.000
ELEVON =	5.000	MACH =	.600
BETAO =	.000	PHI =	.000
DX =	20.000	DY =	.000

RUN NO. 665/ 0 RN/L = 3.29 GRADIENT INTERVAL = -1.00/ 4.00

ALPHAO	DZ	MACH	DX	DY	BETAO	PHI	ALPHAW	BETA	CY	CLN	CSL
10.344	-1.157	.60020	20.75990	-.01360	.01070	.00000	5.85580	.00810	-.00390	.00040	-.00310
10.344	1.504	.60090	20.57800	-.01080	.00820	.00000	5.85790	.00760	-.00340	.00050	-.00280
10.359	6.352	.60080	20.24040	-.01160	.00820	.00000	5.85700	.00670	-.00360	.00060	-.00260
10.371	13.612	.60090	19.74450	-.00940	.00660	.00000	5.84970	.00620	-.00320	.00070	-.00240
10.391	28.736	.59970	18.70630	-.00410	.00160	.00000	5.83920	.01320	-.00130	.00080	-.00220
10.408	43.809	.59970	17.66210	.00120	.00220	.00000	5.83580	.00580	-.00100	.00050	-.00240
10.408	48.295	.59950	17.34990	.00520	.00030	.00000	5.83690	.00580	-.00030	.00050	-.00250
	GRADIENT	.00000	.00000	.00000	.00000	.00000	.00000	.00000	.00000	.00000	.00000

CA20 747/1 02 SI ORBITER DATA (CGN131) (20 JAN 75)

REFERENCE DATA

SREF =	2690.0000 SQ.FT.	XMRP =	1109.0000 IN.XO		
LREF =	474.8100 IN.	YMRP =	.0000 IN.YO		
BREF =	936.6800 IN.	ZMRP =	375.0000 IN.ZO		
SCALE =	.0300				

PARAMETRIC DATA

ALPHAC =	4.000	BETAC =	.000
ELV-IB =	.000	ELV-OB =	3.000
ELEVON =	5.000	MACH =	.600
BETAO =	.000	PHI =	.000
DX =	20.000	DY =	.000

RUN NO. 666/ 0 RN/L = 3.30 GRADIENT INTERVAL = -1.00/ 4.00

ALPHAO	DZ	MACH	DX	DY	BETAO	PHI	ALPHAW	BETA	CY	CLN	CSL
14.563	1.265	.60070	19.36720	-.00550	.00370	.00000	5.88270	-.00740	-.00430	.00200	-.00280
14.561	3.972	.59970	19.17960	-.01280	.00290	.00000	5.88100	.00760	-.00410	.00200	-.00240
14.566	3.805	.60090	18.85080	-.01360	.00120	.00000	5.87500	.00680	-.00430	.00210	-.00120
14.572	16.457	.60070	18.32510	-.01960	.00040	.00000	5.86880	.01380	-.00480	.00210	.00030
14.587	31.737	.59980	17.27880	-.00450	-.00270	.00000	5.85150	.00560	-.00250	.00150	.00080
14.590	46.430	.60030	16.26130	.00240	-.00300	.00000	5.84570	.01340	-.00010	.00090	-.00110
14.592	61.104	.60010	15.24460	.01090	-.00780	.00000	5.84000	.01330	.00150	.00110	-.00140
	GRADIENT	-.00037	-.06931	-.00270	-.00030	.00000	-.00063	.00554	.00007	.00000	.00015

CA20 747/1 02 SI ORBITER DATA (CGN132) (20 JAN 75)

REFERENCE DATA

SREF =	2690.0000 SQ.FT.	XMRP =	1109.0000 IN.XO		
LREF =	474.8100 IN.	YMRP =	.0000 IN.YO		
BREF =	936.6800 IN.	ZMRP =	375.0000 IN.ZO		
SCALE =	.0300				

PARAMETRIC DATA

ALPHAC =	8.000	BETAC =	.000
ELV-IB =	.000	ELV-OB =	3.000
ELEVON =	5.000	MACH =	.600
BETAO =	.000	PHI =	.000
DX =	.000	DY =	.000

RUN NO. [illegible] RN/L = 3.29 GRADIENT INTERVAL = -1.00/ 4.00

ALPHAO	DZ	MACH	DX	DY	BETAO	PHI	ALPHAW	BETA	CY	CLN	CSL
10.325	-3.370	.60020	-.58580	-.01940	.00440	.00000	9.73200	.05010	-.00190	.00120	-.00510
10.339	-.284	.59980	-1.00620	-.02020	.00540	.00000	9.73490	.04910	-.00210	.00100	-.00410
10.358	4.265	.59930	-1.62680	-.01390	.00340	.00000	9.73230	.04020	-.00140	.00080	-.00360
10.393	11.674	.59960	-2.64370	-.01290	.00270	.00000	9.72790	.03930	-.00130	.00080	-.00320
10.467	26.974	.60060	-4.76500	-.00550	-.00210	.00000	9.72060	.04650	.00000	.00080	-.00260
10.499	41.940	.60090	-6.84130	-.00280	-.00150	.00000	9.71560	.03910	.00030	.00060	-.00270
10.504	47.907	.59960	-7.57290	.00000	-.00430	.00000	9.71420	.04670	.00090	.00080	-.00280
	GRADIENT	.00000	.00000	.00000	.00000	.00000	.00000	.00000	.00000	.00000	.00000

ORIGINAL PAGE IS
OF POOR QUALITY

CA20 747/1 02 S1 ORBITER DATA (CGN132) (20 JAN 75)

REFERENCE DATA

SREF =	2690.0000 SQ.FT.	XMRP =	1109.0000 IN.XO
LREF =	74.8100 IN.	YMRP =	.0000 IN.YO
BREF =	936.6800 IN.	ZMRP =	375.0000 IN.ZO
SCALE =	.0300		

PARAMETRIC DATA

ALPHAC =	8.000	BETAC =	.000
ELV-IB =	.000	ELV-OB =	3.000
ELEVON =	5.000	MACH =	.600
BETAO =	.000	PHI =	.000
DX =	.000	DY =	.000

RUN NO. 654/ 0 RN/L = 3.27 GRADIENT INTERVAL = -1.00/ 4.00

ALPHAO	DZ	MACH	DX	DY	BETAO	PHI	ALPHAH	BETA	CY	CLN	CSL
14.639	-1.095	.59930	-1.94790	-.01490	.00090	.00000	9.77180	.04100	-.00210	.00210	-.00420
14.640	1.605	.59900	-2.34740	-.01540	.00040	.00000	9.77590	.04040	-.00230	.00210	-.00350
14.651	6.322	.59930	-2.96170	-.01730	-.00080	.00000	9.76190	.04750	-.00260	.00240	-.00320
14.669	13.867	.59920	-4.00010	-.01860	-.00120	.00000	9.75180	.03900	-.00330	.00230	-.00110
14.700	28.918	.59940	-6.07580	-.01170	-.00600	.00000	9.73820	.05370	-.00190	.00190	.00070
14.717	43.759	.60080	-8.13400	.00140	-.00650	.00000	9.72610	.04610	.00070	.00110	-.00120
14.720	58.717	.59920	-10.22410	.01690	-.01250	.00000	9.72190	.03880	.00290	.00120	-.00200
	GRADIENT	.00000	.00000	.00000	.00000	.00000	.00000	.00000	.00000	.00000	.00000

CA20 747/1 02 S1 ORBITER DATA (CGN133) (20 JAN 7[illegible])

REFERENCE DATA

SREF =	2690.0000 SQ.FT.	XMRP =	1109.0000 IN.XO
LREF =	474.8100 IN.	YMRP =	.0000 IN.YO
BREF =	936.6800 IN.	ZMRP =	375.0000 IN.ZO
SCALE =	.0300		

PARAMETRIC DATA

ALPHAC =	8.000	BETAC =	.000
ELV-IB =	.000	ELV-OB =	3.000
ELEVON =	5.000	MACH =	.600
BETAO =	.000	PHI =	.000
DX =	10.000	DY =	.000

RUN NO. 658/ 0 RN/L = 3.32 GRADIENT INTERVAL = -1.00/ 4.00

ALPHAO	DZ	MACH	DX	DY	BETAO	PHI	ALPHAH	BETA	CY	CLN	CSL
10.250	-3.341	.59930	9.46660	-.00230	.00660	.00000	9.73350	-.00380	-.00200	.00070	-.00460
10.261	-.279	.60070	9.04960	-.00670	.00710	.00000	9.73400	.00310	-.00230	.00060	-.00390
10.285	4.305	.60080	8.41940	-.00380	.00540	.00000	9.73010	.00210	-.00180	.00060	-.00350
10.320	11.768	.60090	7.39060	-.00170	.00420	.00000	9.72910	.00100	-.00150	.00060	-.00310
10.383	26.778	.59960	5.31340	.00370	-.00080	.00000	9.72150	.00810	-.00020	.00080	-.00270
10.431	41.918	.60030	3.20170	.01180	-.00050	.00000	9.71970	-.00690	.00030	.00050	-.00290
10.441	48.647	.60060	2.26430	.01190	-.00240	.00000	9.71860	.00070	.00080	.00060	-.00280
	GRADIENT	.00000	.00000	.00000	.00000	.00000	.00000	.00000	.00000	.00000	.00000

CA20 747/1 02 SI ORBITER DATA (CGN133) (20 JAN 75)

REFERENCE DATA

SREF = 2690.0000 SQ.FT. XMRP = 1109.0000 IN.XO
LREF = 474.8100 IN. YMRP = .0000 IN.YO
BREF = 936.6800 IN. ZMRP = 375.0000 IN.ZO
SCALE = .0300

PARAMETRIC DATA

ALPHAC = 8.000 BETAC = .000
ELV-IB = .000 ELV-OB = 3.000
ELEVON = 5.000 MACH = .600
BETAO = .000 PHI = .000
DX = 10.000 DY = .000

RUN NO. 660/ 0 RN/L = 3.29 GRADIENT INTERVAL = -1.00/ 4.00

ALPHAO	DZ	MACH	DX	DY	BETAO	PHI	ALPHAH	BETA	CY	CLN	CSL
14.520	-1.391	.60010	8.03730	.00340	.00250	.00000	9.76000	-.00500	-.00110	.00130	-.00460
14.524	1.080	.59980	7.69910	.00410	.00150	.00000	9.75850	-.00550	-.00110	.00130	-.00390
14.540	6.153	.59910	7.00390	-.00180	.00050	.00000	9.75340	.00920	-.00130	.00140	-.00320
14.567	13.465	.59920	6.00060	-.00690	-.00040	.00000	9.74650	.01620	-.00190	.00180	-.00270
14.611	28.593	.59930	3.91600	.00730	-.00720	.00000	9.73550	-.00030	-.00100	.00220	-.00120
14.634	43.596	.59940	1.83370	.00150	-.00600	.00000	9.72810	.00760	-.00150	.00190	.00000
14.648	58.440	.60020	-.23670	.01520	-.01150	.00000	9.72580	.00040	-.0020	.00200	.00020
	GRADIENT	.00000	.00000	.00000	.00000	.00000	.00000	.00000	.00000	.00000	.00000

CA20 747/1 02 SI ORBITER DATA (CGN134) (20 JAN 75)

REFERENCE DATA

SREF = 2690.0000 SQ.FT. XMRP = 1109.0000 IN.XO
LREF = 474.8100 IN. YMRP = .0000 IN.YO
BREF = 936.6800 IN. ZMRP = 375.0000 IN.ZO
SCALE = .0300

PARAMETRIC DATA

ALPHAC = 8.000 BETAC = .000
ELV-IB = .000 ELV-OB = 3.000
ELEVON = 5.000 MACH = .600
BETAO = .000 PHI = .000
DX = 20.000 DY = .000

RUN NO. 668/ 0 RN/L = 3.28 GRADIENT INTERVAL = -1.00/ 4.00

ALPHAO	DZ	MACH	DX	DY	BETAO	PHI	ALPHAH	BETA	CY	CLN	CSL
10.184	-3.785	.59970	19.58200	-.01150	.01250	.00000	9.73010	.01060	-.00340	.00000	-.00410
10.194	.797	.60000	18.95340	-.01600	.01120	.00000	9.73130	.01700	-.00340	.00000	-.00310
10.227	8.220	.59910	17.92710	-.00760	.00800	.00000	9.72960	.00810	-.00270	.00020	-.00270
10.297	23.195	.60060	15.84870	-.00440	.00240	.00000	9.72530	.01510	-.00130	.00060	-.00240
10.347	38.211	.60080	13.75840	-.00420	.00070	.00000	9.72080	.02340	-.00030	.00050	-.00240
10.366	49.398	.60060	12.19640	.00940	-.00190	.00000	9.72110	.00810	.00050	.00060	-.00260
	GRADIENT	.00000	.00000	.00000	.00000	.00000	.00000	.00000	.00000	.00000	.00000

CA20 747/1 02 SI ORBITER DATA (CGN134) (20 JAN 75)

REFERENCE DATA

SREF = 2690.0000 SQ.FT. XMRP = 1109.0000 IN.XO
LREF = 474.8100 IN. YMRP = .0000 IN.YO
BREF = 936.6800 IN. ZMRP = 375.0000 IN.ZO
SCALE = .0300

PARAMETRIC DATA

ALPHAC = 8.000 BETAC = .000
ELV-IB = .000 ELV-OB = 3.000
ELEVON = 5.000 MACH = .600
BETAO = .000 PHI = .000
DX = 20.000 DY = .000

RUN NO. 667/ 0 RN/L = 3.29 GRADIENT INTERVAL = -1.00/ 4.00

ALPHAO	DZ	MACH	DX	DY	BETAO	PHI	ALPHAH	BETA	CY	CLN	CSL
14.434	-1.978	.60080	18.06030	-.00450	.00860	.00000	9.75680	.00220	-.00280	.00080	-.00450
14.439	1.123	.59910	17.63650	-.00300	.00720	.00000	9.75390	.00130	-.00260	.00080	-.00370
14.456	5.657	.60090	17.01440	-.00600	.00540	.00000	9.75090	.00810	-.00240	.00090	-.00310
14.482	13.159	.59930	15.98070	-.00680	.00360	.00000	9.74550	.00740	-.00270	.00120	-.00240
14.529	28.036	.59980	13.92490	-.00740	-.00290	.00000	9.73940	.01440	-.00220	.00210	-.00200
14.557	42.826	.60040	11.87180	-.00890	-.00280	.00000	9.73310	.01490	-.00260	.00190	-.00070
14.572	57.824	.60030	9.78330	.00220	-.00830	.00000	9.72650	.00760	-.00140	.00220	.00010
	GRADIENT	.00000	.00000	.00000	.00000	.00000	.00000	.00000	.00000	.00000	.00000

CA20 747/1 02 SI ORBITER DATA (CGN135) (20 JAN 75)

REFERENCE DATA

SREF = 2690.0000 SQ.FT. XMRP = 1109.0000 IN.XO
LREF = 474.8100 IN. YMRP = .0000 IN.YO
BREF = 936.6800 IN. ZMRP = 375.0000 IN.ZO
SCALE = .0300

PARAMETRIC DATA

ALPHAC = 4.000 BETAC = -5.000
ELV-IB = .000 ELV-OB = 3.000
ELEVON = 5.000 MACH = .600
BETAO = .000 PHI = .000
DX = .000 DY = 10.000

RUN NO. 728/ 0 RN/L = 3.27 GRADIENT INTERVAL = -1.00/ 4.00

ALPHAO	DZ	MACH	DX	DY	BETAO	PHI	ALPHAH	BETA	CY	CLN	CSL
10.520	-1.686	.59940	.87430	11.02640	.03050	.00000	5.82670	-4.95860	-.00590	-.00110	-.00490
10.517	1.116	.60050	.68300	11.02080	.03090	.00000	5.82390	-4.95160	-.00670	-.00080	-.00480
10.515	5.425	.60030	.39060	11.02730	.02690	.00000	5.81750	-4.96100	-.00630	-.00030	-.00460
10.523	13.266	.60010	-.14640	11.04010	.01690	.00000	5.81350	-4.94970	-.00450	.00030	-.00420
10.531	28.048	.59920	-1.15190	11.06810	.00140	.00000	5.80280	-4.96350	-.00130	.00120	-.00360
10.541	43.286	.60080	-2.18980	11.08330	-.00620	.00000	5.79360	-4.96030	.00070	.00130	-.00340
	GRADIENT	.00000	.00000	.00000	.00000	.00000	.00000	.00000	.00000	.00000	.00000

CA20 747/1 02 SI ORBITER DATA (CGN136) (20 JAN 75)

REFERENCE DATA

SREF =	2690.0000 SQ.FT.	XMRP =	1109.0000 IN.XO		
LREF =	474.8100 IN.	YMRP =	.0000 IN.YO		
BREF =	936.6800 IN.	ZMRP =	375.0000 IN.ZO		
SCALE =	.0300				

PARAMETRIC DATA

ALPHAC =	4.000	BETAC =	-5.000
ELV-IB =	.000	ELV-OB =	3.000
ELEVON =	5.000	MACH =	.600
BETAO =	.000	PHI =	.000
DX =	10.000	DY =	10.000

RUN NO. 732/ 0 RN/L = 3.26 GRADIENT INTERVAL = -1.00/ 4.00

ALPHAO	DZ	MACH	DX	DY	BETAO	PHI	ALPHAH	BETA	CY	CLN	CSL
10.431	-2.314	.59980	10.86780	11.92090	.02560	.00000	5.85030	-5.00450	-.00550	-.00120	-.00350
10.429	1.200	.60050	10.62870	11.91570	.02550	.00000	5.84850	-4.99710	-.00610	-.00080	-.00370
10.436	5.568	.60040	10.32740	11.92110	.02320	.00000	5.84590	-5.00650	-.00590	-.00050	-.00390
10.442	12.949	.60080	9.82710	11.92880	.01650	.00000	5.83690	-5.00300	-.00460	.00010	-.00390
10.461	28.270	.60060	8.77300	11.95600	.00030	.00000	5.83260	-5.00920	-.00070	.00100	-.00360
10.477	43.283	.60010	7.73500	11.96800	-.00600	.00000	5.82690	-5.00680	.00110	.00120	-.00340
10.478	47.066	.59970	7.47070	11.97270	-.00720	.00000	5.82790	-5.01380	.00130	.00120	-.00340
	GRADIENT	.00000	.00000	.00000	.00000	.00000	.00000	.00000	.00000	.00000	.00000

CA20 747/1 02 SI ORBITER DATA (CGN137) (20 JAN 75)

REFERENCE DATA

SREF =	2690.0000 SQ.FT.	XMRP =	1109.0000 IN.XO		
LREF =	474.8100 IN.	YMRP =	.0000 IN.YO		
BREF =	936.6800 IN.	ZMRP =	375.0000 IN.ZO		
SCALE =	.0300				

PARAMETRIC DATA

ALPHAC =	4.000	BETAC =	.000
ELV-IB =	.000	ELV-OB =	3.000
ELEVON =	5.000	MACH =	.600
BETAO =	.000	PHI =	.000
DX =	.000	DY =	10.000

RUN NO. 727/ 0 RN/L = 3.35 GRADIENT INTERVAL = -1.00/ 4.00

ALPHAO	DZ	MACH	DX	DY	BETAO	PHI	ALPHAH	BETA	CY	CLN	CSL
10.539	-1.720	.59990	.88540	9.98370	.01890	.00000	5.83340	.03160	-.00010	-.00100	-.01160
10.532	1.145	.59910	.68770	9.97640	.02070	.00000	5.83250	.02160	-.00190	-.00080	-.00950
10.533	5.590	.60050	.38650	9.97520	.01990	.00000	5.82510	.01060	-.00270	-.00050	-.00790
10.535	13.225	.60040	-.13250	9.98060	.01510	.00000	5.81720	-.00130	-.00260	.00000	-.00630
10.542	28.323	.60040	-1.16330	9.99290	.00450	.00000	5.80900	.00080	-.00130	.00080	-.00460
10.549	43.196	.60050	-2.17890	10.00810	-.00350	.00000	5.79920	-.00580	.00040	.00110	-.00400
	GRADIENT	.00000	.00000	.00000	.00000	.00000	.00000	.00000	.00000	.00000	.00000

CA20 747/1 02 SI ORBITER DATA (CGN138) (20 JAN 75)

REFERENCE DATA

SREF =	2690.0000 SQ.FT.	XMRP =	1109.0000 IN.XO		
LREF =	474.8100 IN.	YMRP =	.0000 IN.YO		
BREF =	936.6800 IN.	ZMRP =	375.0000 IN.ZO		
SCALE =	.0300				

PARAMETRIC DATA

ALPHAC =	4.000	BETAC =	.000
ELV-IB =	.000	ELV-OB =	3.000
ELEVON =	5.000	MACH =	.600
BETAO =	.000	PHI =	.000
DX =	10.000	DY =	10.000

RUN NO. 731/ 0 RN/L = 3.29 GRADIENT INTERVAL = -1.00/ 4.00

ALPHAO	DZ	MACH	DX	DY	BETAO	PHI	ALPHAH	BETA	CY	CLN	CSL
10.438	-1.917	.60030	10.85750	9.98490	.01980	.00000	5.85620	.06980	-.00120	-.00090	-.01100
10.439	1.309	.60060	10.63520	9.95920	.02020	.00000	5.85440	.06800	-.00260	-.00070	-.00900
10.441	5.640	.60020	10.33640	9.95380	.01960	.00000	5.85330	.07270	-.00320	-.00050	-.00760
10.446	13.088	.60080	9.83100	9.96040	.01540	.00000	5.84330	.06110	-.00300	-.00010	-.00620
10.464	28.151	.60020	8.79230	9.96980	.00380	.00000	5.83680	.07070	-.00100	.00070	-.00470
10.475	43.272	.59990	7.75180	9.98720	-.00320	.00000	5.82780	.05640	.00060	.00100	-.00400
10.474	47.051	.59910	7.49000	9.98650	-.00500	.00000	5.82360	.05460	.00090	.00120	-.00390
	GRADIENT	.00000	.00000	.00000	.00000	.00000	.00000	.00000	.00000	.00000	.00000

CA20 747/1 02 SI ORBITER DATA (CGN139) (20 JAN 75)

REFERENCE DATA

SREF =	2690.0000 SQ.FT.	XMRP =	1109.0000 IN.XO		
LREF =	474.8100 IN.	YMRP =	.0000 IN.YO		
BREF =	936.6800 IN.	ZMRP =	375.0000 IN.ZO		
SCALE =	.0300				

PARAMETRIC DATA

ALPHAC =	4.000	BETAC =	5.000
ELV-IB =	.000	ELV-OB =	3.000
ELEVON =	5.000	MACH =	.600
BETAO =	.000	PHI =	.000
DX =	.000	DY =	10.000

RUN NO. 729/ 0 RN/L = 3.25 GRADIENT INTERVAL = -1.00/ 4.00

ALPHAO	DZ	MACH	DX	DY	BETAO	PHI	ALPHAH	BETA	CY	CLN	CSL
10.550	-1.816	.60090	.88480	8.78140	.04000	.00000	5.83180	5.12510	-.00240	-.00170	-.02010
10.536	1.291	.59920	.67080	8.78380	.03380	.00000	5.82790	5.11980	-.00300	-.00140	-.01520
10.535	5.717	.60090	.37070	8.78850	.02850	.00000	5.82240	5.10560	-.00310	-.00100	-.01170
10.534	13.051	.59980	-.13060	8.79650	.02100	.00000	5.81730	5.09230	-.00290	-.00040	-.00860
10.539	28.194	.59940	-1.16040	8.80860	.00820	.00000	5.80400	5.09540	-.00170	.00060	-.00580
10.541	43.343	.60000	-2.19520	8.81680	.00080	.00000	5.79690	5.10330	-.00050	.00090	-.00440
	GRADIENT	.00000	.00000	.00000	.00000	.00000	.00000	.00000	.00000	.00000	.00000

CA20 747/1 02 S1 ORBITER DATA (CGN140) (20 JAN 75)

REFERENCE DATA

SREF =	2690.0000 SQ.FT.	XMRP =	1109.0000	IN.XO	
LREF =	474.8100 IN.	YMRP =	.0000	IN.YO	
BREF =	936.6800 IN.	ZMRP =	375.0000	IN.ZO	
SCALE =	.0300				

PARAMETRIC DATA

ALPHAC =	4.000	BETAC =	5.000
ELV-IB =	.000	ELV-OB =	3.000
ELEVON =	5.000	MACH =	.600
BETAO =	.000	PHI =	.000
DX =	10.000	DY =	10.000

RUN NO. 733/ 0 RN/L = 3.26 GRADIENT INTERVAL = -1.00/ 4.00

ALPHAO	DZ	MACH	DX	DY	BETAO	PHI	ALPHAW	BETA	CY	CLN	CSL
10.454	-1.821	.60040	10.83530	7.94520	.03540	.00000	5.85460	5.01710	-.00320	-.00120	-.01950
10.451	1.281	.60080	10.62330	7.94600	.03110	.00000	5.85280	5.01310	-.00360	-.00100	-.01520
10.450	5.640	.60050	10.32500	7.95330	.02550	.00000	5.84960	4.99880	-.00330	-.00070	-.01180
10.454	13.081	.60000	9.81810	7.95780	.01940	.00000	5.84150	4.99280	-.00300	-.00030	-.00870
10.469	28.314	.60080	8.77030	7.96820	.00690	.00000	5.83440	4.99560	-.00140	.00060	-.00580
10.478	43.187	.60060	7.74450	7.97620	.00060	.00000	5.82840	4.99600	-.00030	.00090	-.00450
10.479	47.015	.60040	7.47410	7.97880	-.00120	.00000	5.83180	4.99630	.00010	.00100	-.00430
	GRADIENT	.00000	.00000	.00000	.00000	.00000	.00000	.00000	.00000	.00000	.00000

CA20 747/1 01 S1 ORBITER DATA (CGN141) (20 JAN 75)

REFERENCE DATA

SREF =	2690.0000 SQ.FT.	XMRP =	1109.0000	IN.XO	
LREF =	474.8100 IN.	YMRP =	.0000	IN.YO	
BREF =	936.6800 IN.	ZMRP =	375.0000	IN.ZO	
SCALE =	.0300				

PARAMETRIC DATA

ALPHAC =	4.000	BETAC =	.000
ELV-IB =	10.000	ELV-OB =	13.000
ELEVON =	5.000	MACH =	.600
BETAO =	.000	PHI =	.000
DX =	.000	DY =	.000

RUN NO. 707/ 0 RN/L = 3.25 GRADIENT INTERVAL = -1.00/ 4.00

ALPHAO	DZ	MACH	DX	DY	BETAO	PHI	ALPHAW	BETA	CY	CLN	CSL
10.523	-1.884	.60080	.87920	-.01420	.01180	.00000	5.83190	.00050	-.00200	-.00040	-.00280
10.504	.978	.59910	.69440	-.01200	.01100	.00000	5.83240	.00020	-.00170	-.00050	-.00240
10.501	5.523	.59930	.37680	-.01360	.01060	.00000	5.82540	.00740	-.00170	-.00050	-.00220
10.504	13.055	.59950	-.13550	-.00840	.00810	.00000	5.81690	-.00060	-.00130	-.00030	-.00190
10.516	28.092	.59950	-1.15670	-.00310	.00260	.00000	5.80490	.00670	-.00070	.00020	-.00180
10.523	42.970	.59980	-2.18400	.00060	.00280	.00000	5.79720	-.00120	-.00020	.00000	-.00200
	GRADIENT	.00000	.00000	.00000	.00000	.00000	.00000	.00000	.00000	.00000	.00000

CA20 747/1 01 S1 ORBITER DATA (CGN141) (20 JAN 75)

REFERENCE DATA

SREF =	2690.0000 SQ.FT.	XMRP =	1109.0000 IN.XO
LREF =	474.8100 IN.	YMRP =	.0000 IN.YO
BREF =	936.6800 IN.	ZMRP =	375.0000 IN.ZO
SCALE =	.0300		

PARAMETRIC DATA

ALPHAC =	4.000	BETAC =	.000
ELV-IB =	10.000	ELV-OB =	13.000
ELEVON =	5.000	MACH =	.600
BETAO =	.000	PHI =	.000
DX =	.000	DY =	.000

RUN NO. 708/ 0 RN/L = 3.19 GRADIENT INTERVAL = -1.00/ 4.00

ALPHAO	DZ	MACH	DX	DY	BETAO	PHI	ALPHAW	BETA	CY	CLN	CSL
14.811	.024	.60020	-.26990	-.01340	.00790	.00000	5.86260	-.00700	-.00280	.00060	-.00170
14.784	3.045	.59940	-.47840	-.01140	.00760	.00000	5.85980	-.00050	-.00200	.00010	-.00130
14.771	7.498	.59900	-.78610	-.01170	.00750	.00000	5.85370	-.00070	-.00210	.00010	-.00120
14.765	14.984	.60030	-1.29790	-.00650	.00470	.00000	5.83950	-.00790	-.00180	.00040	-.00090
14.762	29.993	.59970	-2.32360	.00060	.00060	.00000	5.81920	-.00140	-.00050	.00040	-.00100
14.773	45.117	.60060	-3.36230	.00450	-.00040	.00000	5.80690	-.00140	.00020	.00040	-.00160
	GRADIENT	-.00026	-.06903	.00066	-.00010	.00000	-.00093	.00215	.00026	-.00017	.00013

CA20 747/1 01 S1 ORBITER DATA (CGN142) (20 JAN 75)

REFERENCE DATA

SREF =	2690.0000 SQ.FT.	XMRP =	1109.0000 IN.XO
LREF =	474.8100 IN.	YMRP =	.0000 IN.YO
BREF =	936.6800 IN.	ZMRP =	375.0000 IN.ZO
SCALE =	.0300		

PARAMETRIC DATA

ALPHAC =	4.000	BETAC =	.000
ELV-IB =	-10.000	ELV-OB =	-7.000
ELEVON =	5.000	MACH =	.600
BETAO =	.000	PHI =	.000
DX =	.000	DY =	.000

RUN NO. 709/ 0 RN/L = 3.26 GRADIENT INTERVAL = -1.00/ 4.00

ALPHAO	DZ	MACH	DX	DY	BETAO	PHI	ALPHAW	BETA	CY	CLN	CSL
10.510	-2.321	.59970	.91020	-.01830	.01330	.00000	5.87430	-.00070	-.00270	-.00030	-.00290
10.492	.765	.59940	.70150	-.01330	.01170	.00000	5.87190	-.00110	-.00180	-.00050	-.00250
10.488	5.227	.60050	.40050	-.01330	.01100	.00000	5.86680	-.00160	-.00200	-.00040	-.00220
10.491	12.822	.60020	-.11430	-.01030	.00900	.00000	5.85660	-.00190	-.00160	-.00030	-.00190
10.501	27.760	.60030	-1.13010	-.00340	.00300	.00000	5.84560	.00540	-.00070	.00020	-.00170
10.504	42.754	.59920	-2.15880	-.00220	.00320	.00000	5.84080	.00530	-.00040	.00000	-.00200
	GRADIENT	.00000	.00000	.00000	.00000	.00000	.00000	.00000	.00000	.00000	.00000

RUN NO. 710/ 0 RN/L = 3.22 GRADIENT INTERVAL = -1.00/ 4.00

ALPHAO	DZ	MACH	DX	DY	BETAO	PHI	ALPHAW	BETA	CY	CLN	CSL
14.880	.715	.59990	-.33240	-.01950	.00830	.00000	5.90120	-.00850	-.00410	.00100	-.00090
14.855	3.826	.60000	-.54650	-.01550	.00790	.00000	5.89770	-.00950	-.00330	.00060	-.00070
14.843	8.214	.59990	-.84750	-.01270	.00700	.00000	5.89190	-.00240	-.00240	.00040	-.00110
14.833	15.830	.59920	-1.36850	-.00680	.00540	.00000	5.87920	-.00950	-.00170	.00030	-.00130
14.832	30.656	.59990	-2.37840	.00030	.00040	.00000	5.86080	.00500	-.00020	.00040	-.00130
14.845	45.837	.60070	-3.41720	.00358	.00010	.00000	5.84980	-.00250	.00010	.00030	-.00150
	GRADIENT	.00003	-.06882	.00129	-.00013	.00000	-.00135	-.00032	.00026	-.00013	.00006

CA20 747/1 01 S1 ORBITER DATA (CGN143) (20 JAN 75)

REFERENCE DATA

SREF =	2690.0000 SQ.FT.	XMRP =	1109.0000 IN.XO
LREF =	474.8100 IN.	YMRP =	.0000 IN.YO
BREF =	936.6800 IN.	ZMRP =	375.0000 IN.ZO
SCALE =	.0300		

PARAMETRIC DATA

ALPHAC =	4.000	BETAC =	.000
RUD-U =	15.000	RUD-L =	15.000
ELEVON =	5.000	AILRON =	.000
BETAO =	.000	PHI =	.000
DX =	.000	DY =	.000

RUN NO. 711/ 0 RN/L = 3.26 GRADIENT INTERVAL = -1.00/ 4.00

ALPHAO	DZ	MACH	DX	DY	BETAO	PHI	ALPHAW	BETA	CY	CLN	CSL
10.504	-2.028	.60040	.90180	-.00790	.00910	.00000	5.83170	.02080	-.00100	-.00040	-.00330
10.465	.931	.60010	.70250	-.00660	.00820	.00000	5.83280	.02910	-.00050	-.00060	-.00290
10.480	5.560	.59930	.38950	-.00470	.00730	.00000	5.82470	.02230	-.00060	-.00040	-.00260
10.486	12.957	.60060	-.11140	-.00170	.00580	.00000	5.81620	.02310	-.00020	-.00040	-.00230
10.495	27.683	.59980	-1.12660	-.00090	.00160	.00000	5.80430	.03860	.00000	.00000	-.00180
10.513	42.996	.60040	-2.16480	.00170	.00120	.00000	5.79700	.03140	.00020	.00010	-.00210
	GRADIENT	.00000	.00000	.00000	.00000	.00000	.00000	.00000	.00000	.00000	.00000

RUN NO. 712/ 0 RN/L = 3.23 GRADIENT INTERVAL = -1.00/ 4.00

ALPHAO	DZ	MACH	DX	DY	BETAO	PHI	ALPHAW	BETA	CY	CLN	CSL
14.850	.857	.59970	-.28590	-.00380	.00380	.00000	5.86580	.01490	-.00130	.00060	-.00190
14.835	3.331	.60060	-.49550	-.00180	.00300	.00000	5.86000	.02250	-.00060	.00030	-.00180
14.823	7.779	.59990	-.60040	-.00110	.00300	.00000	5.85040	.02240	-.00040	.00010	-.00170
14.816	15.438	.60000	-1.32290	.00080	.00190	.00000	5.83870	.02460	-.00020	.00020	-.00160
14.812	30.319	.60000	-2.33750	.00670	-.00120	.00000	5.82090	.02360	.00060	.00030	-.00150
14.814	45.332	.60030	-3.36420	.00880	-.00280	.00000	5.80920	.03150	.00120	.00030	-.00160
	GRADIENT	.00029	-.05840	.00065	-.00026	.00000	-.00189	.00248	.00023	-.00010	.00003

ORIGINAL PAGE IS
OF POOR QUALITY

CA20 747/1 02 S1 ORBITER DATA (CGN144) (20 JAN 75)

REFERENCE DATA

SREF =	2690.0000 SQ.FT.	XMRP =	1109.0000 IN.XO
LREF =	474.8100 IN.	YMRP =	.0000 IN.YO
BREF =	936.6800 IN.	ZMRP =	375.0000 IN.ZO
SCALE =	.0300		

PARAMETRIC DATA

ALPHAC =	4.000	BETAC =	.000
RUD-U =	15.000	RUD-L =	15.000
ELEVON =	5.000	AILRON =	.000
BETAO =	.000	PHI =	.000
DX =	.000	DY =	.000

RUN NO. 725/ 0 RN/L = 3.35 GRADIENT INTERVAL = -1.00/ 4.00

ALPHAO	DZ	MACH	DX	DY	BETAO	PHI	ALPHAH	BETA	CY	CLN	CSL
10.493	-2.198	.59920	.86940	-.02120	.00909	.00000	5.83560	.04360	-.00290	.00070	-.00350
10.490	.873	.60080	.65950	-.01790	.00720	.00000	5.83230	.04430	-.00250	.00070	-.00290
10.498	5.397	.60040	.34800	-.01580	.00630	.00000	5.82620	.04540	-.00210	.00060	-.00270
10.503	12.963	.60040	-.17080	-.01280	.00430	.00000	5.82090	.04640	-.00180	.00070	-.00230
10.527	28.053	.60080	-1.20520	-.00340	-.00140	.00000	5.81010	.05480	-.00020	.00070	-.00200
10.533	42.969	.59970	-2.22510	-.00150	-.00120	.00000	5.80140	.05530	.00020	.00050	-.00210
	GRADIENT	.00000	.00000	.00000	.00000	.00000	.00000	.00000	.00000	.00000	.00000

CA20 747/1 01 S1 ORBITER DATA (CGN145) (20 JAN 75)

REFERENCE DATA

SREF =	2690.0000 SQ.FT.	XMRP =	1109.0000 IN.XO
LREF =	474.8100 IN.	YMRP =	.0000 IN.YO
BREF =	936.6800 IN.	ZMRP =	375.0000 IN.ZO
SCALE =	.0300		

PARAMETRIC DATA

ALPHAC =	4.000	BETAC =	.000
ELV-IB =	.000	ELV-OB =	3.000
ELEVON =	.000	MACH =	.600
BETAO =	.000	PHI =	.000
DX =	.000	DY =	.000

RUN NO. 719/ 0 RN/L = 3.37 GRADIENT INTERVAL = -1.00/ 4.00

ALPHAO	DZ	MACH	DX	DY	BETAO	PHI	ALPHAH	BETA	CY	CLN	CSL
10.508	-2.315	.59950	.86160	-.02240	.01230	.00000	5.83900	.01600	-.00300	.00000	-.00230
10.485	.910	.60010	.64410	-.01560	.01010	.00000	5.83720	.00790	-.00230	-.00010	-.00190
10.479	5.273	.60050	.34780	-.01470	.00900	.00000	5.83290	.00740	-.00220	.00000	-.00170
10.493	12.814	.59990	-.17030	-.01270	.00720	.00000	5.82510	.00680	-.00210	.00020	-.00140
10.514	27.985	.59990	-1.20940	-.00700	.00240	.00000	5.81500	.01410	-.00120	.00040	-.00110
10.516	42.855	.60060	-2.22930	-.00590	.00230	.00000	5.81080	.01410	-.00100	.00040	-.00140
	GRADIENT	.00000	.00000	.00000	.00000	.00000	.00000	.00000	.00000	.00000	.00000

RUN NO. 720/ 0 RN/L = 3.36 GRADIENT INTERVAL = -1.00/ 4.00

ALPHAO	DZ	MACH	DX	DY	BETAO	PHI	ALPHAH	BETA	CY	CLN	CSL
14.834	.261	.59990	-.35440	-.01240	.00660	.00000	5.87110	.00780	-.00210	.00050	-.00200
14.809	3.316	.60070	-.56180	-.01030	.00510	.00000	5.86790	.00710	-.00160	.00030	-.00180
14.796	7.661	.60060	-.86160	-.00870	.00450	.00000	5.85940	.01500	-.00120	.00030	-.00160
14.787	15.322	.60020	-1.38380	-.00440	.00320	.00000	5.84680	.00720	-.00080	.00030	-.00150
14.785	30.159	.60020	-2.40060	.00200	.00030	.00000	5.83010	.01380	.00050	.00010	-.00150
14.785	45.162	.59980	-3.43280	.00150	-.00110	.00000	5.82200	.01400	.00020	.00040	-.00110
	GRADIENT	.00026	-.06788	.00059	-.00016	.00000	-.00105	-.00023	.00018	-.00007	.00007

CA20 747/1 01 S1 ORBITER DATA (CGN146) (20 JAN 75)

REFERENCE DATA

SREF =	2690.0000 SQ.FT.	XMRP =	1109.0000 IN.XO		
LREF =	474.8100 IN.	YMRP =	.0000 IN.YO		
BREF =	936.6800 IN.	ZMRP =	375.0000 IN.ZO		
SCALE =	.0300				

PARAMETRIC DATA

ALPHAC =	4.000	BETAC =	.000
ELV-IB =	.000	ELV-OB =	3.000
ELEVON =	10.000	MACH =	.600
BETAO =	.000	PHI =	.000
DX =	.000	DY =	.000

RUN NO. 714/ 0 RN/L = 3.32 GRADIENT INTERVAL = -1.00/ 4.00

ALPHAO	DZ	MACH	DX	DY	BETAO	PHI	ALPHAW	BETA	CY	CLN	CSL
10.553	-1.753	.60000	.91190	-.01320	.01160	.00000	5.84170	.00730	-.00140	-.00070	-.00250
10.538	1.319	.59950	.70500	-.01080	.01060	.00000	5.84200	-.00080	-.00150	-.00060	-.00220
10.533	5.976	.59920	.39120	-.00710	.00880	.00000	5.83500	-.00140	-.00090	-.00070	-.00190
10.546	13.370	.59940	-.11340	-.00420	.00710	.00000	5.82500	-.00930	-.00090	-.00040	-.00170
10.559	28.434	.59990	-1.13730	-.00280	.00230	.00000	5.81050	.01370	-.00030	.00000	-.00130
10.566	43.339	.60040	-2.16030	.00340	.00160	.00000	5.80210	-.00170	.00020	-.00010	-.00170
	GRADIENT	.00000	.00000	.00000	.00000	.00000	.00000	.00000	.00000	.00000	.00000

RUN NO. 715/ 0 RN/L = 3.26 GRADIENT INTERVAL = -1.00/ 4.00

ALPHAO	DZ	MACH	DX	DY	BETAO	PHI	ALPHAW	BETA	CY	CLN	CSL
14.836	.243	.60050	-.21980	.00160	.00640	.00000	5.87510	-.00800	.00040	-.00040	-.00380
14.814	3.412	.59960	-.43820	.00680	.00600	.00000	5.87140	-.00830	.00150	-.00090	-.00360
14.803	7.911	.60000	-.74500	.00770	.00520	.00000	5.86270	.00650	.00230	-.00110	-.00390
14.796	15.416	.60060	-1.25570	.01250	.00400	.00000	5.84080	-.00140	.00280	-.00120	-.00420
14.790	30.262	.60080	-2.27070	.01570	-.00090	.00000	5.82830	-.00970	.00240	-.00030	-.00320
14.791	45.331	.59950	-3.30390	.01700	-.00250	.00000	5.81480	-.00190	.00270	-.00010	-.00360
	GRADIENT	-.00028	-.06892	.00164	-.00013	.00000	-.00117	-.00009	.00035	-.00016	.00008

CA20 747/1 01 SI ORBITER DATA (CGN147) (20 JAN 75)

REFERENCE DATA

SREF =	2690.0000 SQ.FT.	XMRP =	1109.0000 IN.XO
LREF =	474.8100 IN.	YMRP =	.0000 IN.YO
BREF =	936.6800 IN.	ZMRP =	375.0000 IN.ZO
SCALE =	.0300		

PARAMETRIC DATA

ALPHAC =	4.000	BETAC =	.000
ELV-IB =	.000	ELV-OB =	3.000
ELEVON =	10.000	MACH =	.300
BETAO =	.000	PHI =	.000
DX =	.000	DY =	.000

RUN NO. 717/ 0 RN/L = 1.89 GRADIENT INTERVAL = -1.00/ 4.00

ALPHAO	DZ	MACH	DX	DY	BETAO	PHI	ALPHAW	BETA	CY	CLN	CSL
10.141	-2.519	.29950	.81180	.00220	.00360	.00000	5.83780	-.01830	-.00150	-.00070	-.00280
10.136	.296	.29970	.61310	.00380	.00280	.00000	5.83750	-.01850	-.00080	-.00080	-.00250
10.135	4.872	.30050	.30110	.00390	.00260	.00000	5.83370	-.01870	-.00080	-.00070	-.00230
10.138	12.202	.29950	-.20310	.00500	.00160	.00000	5.82540	-.01890	-.00040	-.00040	-.00210
10.139	26.995	.29920	-1.21700	.00550	.00010	.00000	5.81450	-.01120	.00030	.00010	-.00180
10.142	42.221	.30030	-2.28320	.00710	-.00030	.00000	5.80700	-.01130	.00130	-.00010	-.00210
	GRADIENT	.00000	.00000	.00000	.00000	.00000	.00000	.00000	.00000	.00000	.00000

CA20 747/1 01 SI ORBITER DATA (CGN148) (20 JAN 75)

REFERENCE DATA

SREF =	2690.0000 SQ.FT.	XMRP =	1109.0000 IN.XO
LREF =	474.8100 IN.	YMRP =	.0000 IN.YO
BREF =	936.6800 IN.	ZMRP =	375.0000 IN.ZO
SCALE =	.0300		

PARAMETRIC DATA

ALPHAC =	4.000	BETAC =	.000
ELV-IB =	.000	ELV-OB =	3.000
ELEVON =	10.000	MACH =	.700
BETAO =	.000	PHI =	.000
DX =	.000	DY =	.000

RUN NO. 716/ 0 RN/L = 3.54 GRADIENT INTERVAL = -1.00/ 4.00

ALPHAO	DZ	MACH	DX	DY	BETAO	PHI	ALPHAW	BETA	CY	CLN	CSL
10.694	-1.671	.69950	1.00630	-.00650	.00800	.00000	5.84060	.00160	-.00070	-.00030	-.00230
10.678	1.362	.69940	.80310	-.00020	.00550	.00000	5.84060	-.00650	-.00030	-.00020	-.00240
10.669	5.761	.69990	.50890	.00080	.00430	.00000	5.83300	.00040	.00010	-.00020	-.00220
10.672	13.248	.69970	.00210	.00210	.00320	.00000	5.82130	-.00760	-.00010	-.00010	-.00150
10.678	28.136	.69950	-1.01140	.00480	-.00020	.00000	5.80840	-.01510	-.00040	.00020	.00020
10.687	43.386	.70020	-2.04590	.00670	-.00150	.00000	5.79430	-.00790	.00000	.00020	-.00020
	GRADIENT	.00000	.00000	.00000	.00000	.00000	.00000	.00000	.00000	.00000	.00000

CA20 747/1 01 S1 ORBITER DATA (CON149) (20 JAN 75)

REFERENCE DATA

SREF = 2690.8[illegible] SQ.FT. XMRP = 1109.0000 IN.XO
LREF = 474.8100 IN. YMRP = .0000 IN.YO
BREF = 936.6800 IN. ZMRP = 375.0000 IN.ZO
SCALE = .0300

PARAMETRIC DATA

ALPHAC =	4.000	BETAC =	.000
RUD-U =	.000	RUD-L =	.000
ELEVON =	5.000	AILRON =	-10.000
BETAO =	.000	PHI =	.000
DX =	.000	DY =	.000

RUN NO. 722/ 0 RN/L = 3.33 GRADIENT INTERVAL = -1.00/ 4.00

ALPHAO	DZ	MACH	DX	DY	BETAO	PHI	ALPHAW	BETA	CY	CLN	CSL
10.503	-2.010	.59960	.09090	.25100	-.08650	.00000	5.85820	.01850	.04280	.00180	-.05460
10.487	1.016	.60000	.08680	.25740	-.09050	.00000	5.85620	.01730	.04350	.00180	-.05340
10.482	5.470	.60000	.08360	.26120	-.09370	.00000	5.85130	.01560	.04380	.00210	-.05270
10.481	12.919	.59940	-.12140	.26800	-.09810	.00000	5.84070	.00120	.04430	.00250	-.05210
10.494	28.155	.59980	-1.16420	.27080	-.10760	.00000	5.82080	.01190	.04590	.00310	-.05130
10.501	42.900	.60060	-2.17720	.28710	-.11030	.00000	5.82100	.00890	.04680	.00300	-.05140
	GRADIENT	.00000	.00000	.00000	.00000	.00000	.00000	.00000	.00000	.00000	.00000

RUN NO. 723/ 0 RN/L = 3.28 GRADIENT INTERVAL = -1.00/ 4.00

ALPHAO	DZ	MACH	DX	DY	BETAO	PHI	ALPHAW	BETA	CY	CLN	CSL
14.782	.127	.59030	-.27480	.24900	-.09720	.00000	5.88580	.01450	.03980	.00810	-.04980
14.780	2.855	.59940	-.46850	.25950	-.09840	.00000	5.88230	.01270	.04210	.00690	-.04800
14.769	7.573	.59960	-.79580	.26120	-.10000	.00000	5.87690	.02520	.04290	.00650	-.04700
14.755	15.007	.60020	-1.29780	.26930	-.10580	.00000	5.86080	.01260	.04330	.00700	-.04610
14.753	30.023	.60080	-2.38950	.28280	-.11230	.00000	5.84740	.00450	.04520	.00690	-.04570
14.748	45.056	.60010	-3.36330	.28550	-.11380	.00000	5.83310	.00650	.04560	.00700	-.04580
	GRADIENT	-.00033	-.07103	.00385	-.00044	.00000	-.00128	-.00066	.00084	-.00044	.00029

CA20 01 S2 S3 ORBITER DATA (DGN001) (20 JAN 75)

REFERENCE DATA

SREF = 2690.0000 SQ.FT. XMRP = 1109.0000 IN.XO
LREF = 474.8100 IN. YMRP = .0000 IN.YO
BREF = 930.6800 IN. ZMRP = 375.0000 IN.ZO
SCALE = .0300

PARAMETRIC DATA

ELEVON = 5.000 AILRON = .000
BETAO = -5.000 PHI = .000

RUN NO. 576/ 0 RN/L = 1.91 GRADIENT INTERVAL = .00/ 12.00

MACH	ALPHAO	Q(PSF)	PB1	PB2	PB4	LHLS	RHLS	PCAV
.299	4.081	125.22060	-.13150	-.22170	-.17270	-.17400	-.18180	-.13250
.299	6.115	125.22070	-.12240	-.21330	-.16460	-.16910	-.17440	-.13560
.299	8.152	125.07500	-.10890	-.20420	-.17570	-.15940	-.16560	-.12690
.299	10.203	125.36630	-.09450	-.19770	-.16980	-.15270	-.15890	-.11930
.299	12.243	125.07460	-.07630	-.18540	-.15580	-.13980	-.14480	-.10680
.300	14.294	125.80350	-.04840	-.16010	-.13140	-.11420	-.12120	-.07980
.300	16.335	125.94970	-.01710	-.13160	-.10260	-.08490	-.0956.	-.05020
.299	17.236	125.07500	-.00680	-.12320	-.09450	-.07630	-.08320	-.04140
	GRADIENT	.01436	.00611	.00397	.00380	.00361	.00380	.00228

RUN NO. 577/ 0 RN/L = 2.81 GRADIENT INTERVAL = .00/ 12.00

MACH	ALPHAO	Q(PSF)	PB1	PB2	PB4	LHLS	RHLS	PCAV
.481	4.186	293.67830	-.38720	-.43570	-.42960	-.42990	-.42490	-.38060
.480	6.247	293.13870	-.36040	-.41620	-.40600	-.40570	-.40200	-.35860
.480	8.336	292.86970	-.33080	-.38960	-.38170	-.38220	-.37710	-.33540
.480	10.417	292.46310	-.30460	-.36820	-.35959	-.36030	-.35480	-.31530
.480	12.496	292.59760	-.27050	-.33910	-.32850	-.32970	-.32450	-.28700
.479	14.585	292.05640	-.20440	-.27490	-.26500	-.26500	-.26060	-.21920
.481	16.675	293.54200	-.15830	-.22630	-.21850	-.21860	-.21340	-.17520
.479	17.643	292.19150	-.14350	-.21140	-.20370	-.20520	-.19930	-.16270
	GRADIENT	-.18827	.01335	.01102	.01129	.01122	.01132	.01054

CA20 01 S2 S3 ORBITER DATA (DGN002) (20 JAN 75)

REFERENCE DATA

SREF = 2690.0000 SQ.FT. XMRP = 1109.0000 IN.XO
LREF = 474.8100 IN. YMRP = .0000 IN.YO
BREF = 936.6800 IN. ZMRP = 375.0000 IN.ZO
SCALE = .0300

PARAMETRIC DATA

ELEVON = 5.000 AILRON = .000
BETAO = .000 PHI = .000

RUN NO. 575/ 0 RN/L = 1.89 GRADIENT INTERVAL = .00/ 12.00

MACH	ALPHAO	Q(PSF)	PB1	PB2	PB4	LHLS	RHLS	PCAV
.299	4.069	125.51340	-.14120	-.16140	-.15350	-.15510	-.14810	-.15640
.300	6.109	125.95090	-.12240	-.15240	-.14170	-.14350	-.13530	-.15320
.300	8.127	125.80530	-.10700	-.14000	-.12770	-.12950	-.12120	-.14000
.299	10.162	125.36760	-.09280	-.12710	-.11290	-.11480	-.10640	-.12560
.301	12.188	126.38780	-.07910	-.11730	-.09670	-.10010	-.09360	-.11120
.299	14.240	125.22150	-.06430	-.10180	-.08560	-.08240	-.08010	-.09610
.299	16.274	125.51330	-.04950	-.08560	-.07010	-.06720	-.06460	-.08040
.300	17.052	125.65910	-.04040	-.07780	-.06200	-.05920	-.05660	-.07220
	GRADIENT		-.02650	.00790	.00567	.00668	.00664	.00685	.00667

CA20 01 S2 S3 ORBITER DATA (DGN003) (20 JAN 75)

REFERENCE DATA

SREF = 2690.0000 SQ.FT. XMRP = 1109.0000 IN.XO
LREF = 474.8100 IN. YMRP = .0000 IN.YO
BREF = 936.6800 IN. ZMRP = 375.0000 IN.ZO
SCALE = .0300

PARAMETRIC DATA

ELEVON = 5.000 AILRON = .000
BETAO = .000 PHI = .000

RUN NO. 572/ 0 RN/L = 3.28 GRADIENT INTERVAL = .00/ 12.00

MACH	ALPHAO	Q(PSF)	PB1	PB2	PB4	LHLS	RHLS	PCAV
.601	-.009	421.01010	-.53340	-.49340	-.51370	-.52080	-.50960	-.50740
.599	4.257	419.65190	-.43150	-.42470	-.44510	-.45370	-.44360	-.43890
.600	4.613	421.01800	-.44970	-.42470	-.42960	-.44080	-.42810	-.41700
.599	5.242	419.77250	-.39220	-.41040	-.41550	-.42560	-.41470	-.40310
.600	6.343	420.39910	-.39110	-.38120	-.40000	-.40780	-.39850	-.38870
.601	8.514	421.14230	-.34040	-.32220	-.34170	-.34990	-.34000	-.33090
.599	10.610	419.52380	-.30510	-.27940	-.30110	-.31020	-.30090	-.29010
	GRADIENT		-.02312	.02105	.02410	.02232	.02250	.02219	.02250

ORIGINAL PAGE IS
OF POOR QUALITY

CA20 01 S2 S3 ORBITER DATA (DGN004) (20 JAN 75)

REFERENCE DATA

SREF = 2690.0000 SQ.FT. XMRP = 1109.0000 IN.XO
LREF = 474.8100 IN. YMRP = .0000 IN.YO
BREF = 936.6800 IN. ZMRP = 375.0000 IN.ZO
SCALE = .0300

PARAMETRIC DATA

ELEVON = 5.000 AILRON = .000
BETAO = .000 PHI = .000

RUN NO. 574/ 0 RN/L = 3.26 GRADIENT INTERVAL = .00/ 12.00

MACH	ALPHAO	Q(PSF)	PB1	PB2	PB4	LHLS	RHLS	PCAV
.601	4.223	421.09510	-.45320	-.43180	-.45250	-.46470	-.45040	-.45910
.601	6.337	421.46490	-.37860	-.40070	-.40230	-.41090	-.39930	-.39380
.601	8.463	421.47120	-.32510	-.34940	-.35210	-.35970	-.34880	-.34160
.601	10.562	421.34220	-.26870	-.30600	-.31080	-.31870	-.30900	-.29890
.599	12.700	419.72320	-.24770	-.25610	-.27240	-.28030	-.27070	-.27260
.601	14.797	421.09510	-.20500	-.21910	-.23330	-.24000	-.22830	-.23740
.600	16.872	420.59770	-.14920	-.16470	-.17640	-.18440	-.17030	-.17848
.599	17.711	419.72470	-.12410	-.14130	-.15430	-.16000	-.14680	-.15450
	GRADIENT	.03544	.02871	.02028	.02248	.02314	.02246	.02521

CA20 02 S2 S3 ORBITER DATA (DGN005) (20 JAN 75)

REFERENCE DATA

SREF = 2690.0000 SQ.FT. XMRP = 1109.0000 IN.XO
LREF = 474.8100 IN. YMRP = .0000 IN.YO
BREF = 936.6800 IN. ZMRP = 375.0000 IN.ZO
SCALE = .0300

PARAMETRIC DATA

ELEVON = 5.000 AILRON = .000
BETAO = -5.000 PHI = .000

RUN NO. 578/ 0 RN/L = 2.87 GRADIENT INTERVAL = .00/ 12.00

MACH	ALPHAO	Q(PSF)	PB1	PB2	PB4	LHLS	RHLS	PCAV
.479	4.174	291.63840	-.44870	-.53030	-.51310	-.34870	-.34740	-.34160
.480	6.255	292.44810	-.45090	-.55110	-.51600	-.32000	-.31780	-.32720
.480	8.346	292.71950	-.45320	-.54780	-.52630	-.29250	-.28950	-.29580
.480	10.422	292.71830	-.45720	-.55430	-.53820	-.26010	-.25790	-.26380
.479	12.509	292.04200	-.45720	-.55820	-.53590	-.21980	-.21880	-.21980
.480	14.604	292.98720	-.46060	-.56470	-.53890	-.18200	-.17910	-.17960
.479	16.697	292.17780	-.48680	-.59650	-.57140	-.15750	-.15620	-.15260
.479	17.586	292.17720	-.49880	-.61070	-.58170	-.13800	-.13740	-.13500
	GRADIENT	.16856	-.00133	-.00330	-.00411	.01408	.01425	.01271

CA20 02 S2 S3 ORBITER DATA (DGN006) (20 JAN 75)

REFERENCE DATA

SREF = 2690.0000 SQ.FT. XMRP = 1109.0000 IN.XO
LREF = 474.8100 IN. YMRP = .0000 IN.YO
BREF = 936.6800 IN. ZMRP = 375.0000 IN.ZO
SCALE = .0300

PARAMETRIC DATA

ELEVON = 5.000 AILRON = .000
BETAO = .000 PHI = .000

RUN NO. 580/ 0 RN/L = 2.85 GRADIENT INTERVAL = .00/ 12.00

MACH	ALPHAO	Q(PSF)	PB1	PB2	PB4	LHLS	RHLS	PCAV
.480	4.158	292.58320	-.43610	-.50110	-.50720	-.28680	-.28280	-.27070
.480	6.223	293.12360	-.42080	-.48820	-.49160	-.26260	-.25450	-.24300
.481	8.306	293.52750	-.41050	-.48300	-.48350	-.22960	-.22290	-.21040
.480	10.404	292.31290	-.41220	-.48620	-.49020	-.19660	-.18850	-.17770
.480	12.487	293.12230	-.42360	-.50500	-.50720	-.16490	-.15490	-.14510
.480	14.551	292.99850	-.44870	-.53030	-.53670	-.12950	-.11720	-.11180
.479	16.629	291.63900	-.48850	-.57510	-.59510	-.09400	-.08820	-.07980
.480	17.347	292.44870	-.50730	-.59390	-.60830	-.08550	-.07880	-.07220
	GRADIENT	-.02021	.00393	.00239	.00283	.01467	.01511	.01497

RUN NO. 579/ 0 RN/L = 3.36 GRADIENT INTERVAL = .00/ 12.00

MACH	ALPHAO	Q(PSF)	PB1	PB2	PB4	LHLS	RHLS	PCAV
.599	4.252	418.77280	-.65530	-.69560	-.70500	-.39020	-.37170	-.37990
.599	6.355	418.77130	-.61660	-.70210	-.68210	-.32790	-.31110	-.32980
.599	8.455	418.77130	-.60750	-.69110	-.66510	-.27840	-.25850	-.28830
.600	10.572	419.27010	-.62290	-.70600	-.68280	-.23570	-.21340	-.23860
.600	12.711	419.64220	-.65880	-.73200	-.71680	-.18870	-.16290	-.18780
.600	14.811	419.51870	-.71910	-.78450	-.77880	-.15630	-.12990	-.15450
.600	16.885	419.88940	-.81480	-.88430	-.88510	-.10750	-.09290	-.10930
.599	17.522	419.01690	-.84720	-.92640	-.92500	-.08790	-.07680	-.08920
	GRADIENT	.07094	.00504	-.00096	.00396	.02435	.02504	.02257

CA20 01 SI ORBITER DATA (DGN007) (20 JAN 75)

REFERENCE DATA

SREF = 2690.0000 SQ.FT. XMRP = 1109.0000 IN.XO
LREF = 474.8100 IN. YMRP = .0000 IN.YO
BREF = 936.6[illegible] IN. ZMRP = 375.0000 IN.ZO
SCALE = .0300

PARAMETRIC DATA

ELEVON = 5.000 AILRON = .000
BETAO = -5.000 PHI = .000

RUN NO. 603/ 0 RN/L = 2.00 GRADIENT INTERVAL = .00/ 12.00

MACH	ALPHAO	Q(PSF)	PB1	PB2	PB4	LHLS	RHLS	PCAV
.300	4.045	126.54920	-.08930	-.12190	-.07000	-.06410	-.08690	-.03890
.299	6.083	125.96630	-.09670	-.13870	-.08370	-.06840	-.09090	-.04330
.299	8.123	126.11250	-.10480	-.14390	-.08650	-.07750	-.09900	-.05210
.300	10.174	126.54970	-.14170	-.17830	-.12410	-.11480	-.13470	-.08670
.300	12.220	126.54960	-.12770	-.16210	-.11100	-.09950	-.12190	-.07220
.299	14.238	126.25780	-.12110	-.15820	-.12470	-.09520	-.11710	-.06590
.300	16.301	126.54970	-.13140	-.16930	-.12070	-.10620	-.12660	-.07470
.301	18.356	127.42390	-.14030	-.17380	-.12640	-.11540	-.13600	-.08600
.299	20.373	126.11200	-.14620	-.17440	-.13320	-.12210	-.14270	-.09480
	GRADIENT	.00738	-.00810	-.00854	-.00809	-.00790	-.00742	-.00746

RUN NO. 604/ 0 RN/L = 3.41 GRADIENT INTERVAL = .00/ 12.00

MACH	ALPHAO	Q(PSF)	PB1	PB2	PB4	LHLS	RHLS	PCAV
.600	4.178	423.48400	-.24660	-.25220	-.23000	-.23750	-.24440	-.20600
.600	6.295	423.61630	-.28500	-.32160	-.24430	-.25830	-.27330	-.22730
.601	8.427	424.11040	-.38310	-.41300	-.31370	-.36270	-.37100	-.33030
.600	10.623	423.24160	-.43040	-.45510	-.38040	-.41030	-.41880	-.37560
.601	12.689	423.98610	-.34990	-.37410	-.33080	-.33150	-.34400	-.29450
.601	14.810	423.86490	-.37350	-.39350	-.34560	-.35720	-.36830	-.32030
.599	15.845	422.24470	-.41860	-.43240	-.36730	-.40300	-.41540	-.36800
.601	16.884	423.86340	-.45620	-.45840	-.42530	-.44570	-.45710	-.41200
.601	19.013	424.10410	-.57140	-.57310	-.53590	-.56660	-.57630	-.51440
.600	21.153	422.98760	-.64670	-.65420	-.59330	-.64900	-.64970	-.59470
	GRADIENT	-.01190	-.03025	-.03258	-.02429	-.02902	-.02893	-.02851

CA20 01 SI ORBITER DATA (DGN009) (20 JAN 75)

REFERENCE DATA

SREF = 2690.0000 SQ.FT. XMRP = 1109.0000 IN.XO
LREF = 474.8100 IN. YMRP = .0000 IN.YO
BREF = 936.6800 IN. ZMRP = 375.0000 IN.ZO
SCALE = .0300

PARAMETRIC DATA

ELEVON = .000 AILRON = .000
BETAO = .000 PHI = .000

RUN NO. 614/ 0 RN/L = 3.26 GRADIENT INTERVAL = .00/ 12.00

MACH	ALPHAO	Q(PSF)	PB1	PB2	PB4	LHLS	RHLS	PCAV
.601	4.204	423.96270	-.11440	-.12960	-.11500	-.11970	-.12390	-.09230
.600	6.291	423.59130	-.15350	-.18540	-.14630	-.15390	-.15420	-.12240
.600	8.408	423.46700	-.16980	-.19770	-.16230	-.17100	-.16900	-.13560
.600	10.522	422.84840	-.18530	-.21130	-.17650	-.18680	-.18380	-.14880
.599	12.651	422.59380	-.21480	-.23860	-.20840	-.21920	-.21540	-.18150
.599	14.756	422.34520	-.22000	-.24180	-.21520	-.22530	-.22220	-.18960
.599	16.848	422.47770	-.22740	-.24570	-.22320	-.23380	-.23020	-.19650
.600	18.960	423.71730	-.26210	-.27740	-.26130	-.27110	-.26660	-.23300
.600	21.090	423.72040	-.23620	-.24630	-.23970	-.24790	-.24300	-.20910
	GRADIENT		-.16454	-.01086	-.01220	-.00951	-.01036	-.00922	-.00866

CA20 01 SI ORBITER DATA (DGN009) (20 JAN 75)

REFERENCE DATA

SREF = 2690.0000 SQ.FT. XMRP = 1109.0000 IN.XO
LREF = 474.8100 IN. YMRP = .0000 IN.YO
BREF = 936.6800 IN. ZMRP = 375.0000 IN.ZO
SCALE = .0300

PARAMETRIC DATA

ELEVON = 5.000 AILRON = -10.000
BETAO = .000 PHI = .000

RUN NO. 613/ 0 RN/L = 3.26 GRADIENT INTERVAL = .00/ 12.00

MACH	ALPHAO	Q(PSF)	PB1	PB2	PB4	LHLS	RHLS	PCAV
.601	4.208	423.65550	-.19560	-.20360	-.21180	-.20090	-.20330	-.17900
.600	6.333	423.11090	-.21780	-.24050	-.24480	-.21740	-.22290	-.19410
.601	8.429	424.10410	-.25250	-.27170	-.25680	-.25340	-.25990	-.22800
.599	10.544	422.61220	-.26280	-.28010	-.26020	-.26320	-.27000	-.23800
.601	12.646	423.86020	-.28280	-.29930	-.26190	-.28570	-.29150	-.26130
.600	14.760	423.35970	-.30340	-.31510	-.29100	-.30770	-.31240	-.28510
.600	16.873	423.35810	-.31820	-.32740	-.28980	-.32240	-.32660	-.30020
.601	18.987	423.85230	-.34260	-.34560	-.33760	-.34920	-.35080	-.32600
.600	21.110	423.61470	-.34700	-.35080	-.35530	-.35720	-.35750	-.32910
	GRADIENT		-.13007	-.01119	-.01235	-.00745	-.01055	-.01123	-.00999

CA20 01 SI ORBITER DATA (DGN010) (20 JAN 75)

REFERENCE DATA

SREF = 2690.0000 SQ.FT. XMRP = 1109.0000 IN.XO
LREF = 474.8100 IN. YMRP = .0000 IN.YO
BREF = 936.6800 IN. ZMRP = 375.0000 IN.ZO
SCALE = .0300

PARAMETRIC DATA

ELEVON = 5.000 AILRON = .000
BETAO = .000 PHI = .000

RUN NO. 615/ 0 RN/L = 1.92 GRADIENT INTERVAL = .00/ 12.00

MACH	ALPHAO	Q(PSF)	PB1	PB2	PB4	LHLS	RHLS	PCAV
.299	4.061	126.24970	-.04060	-.07000	-.00740	-.02080	-.04040	.00820
.299	6.090	125.95810	-.05980	-.09210	-.03300	-.04330	-.06190	-.01630
.299	8.121	126.10420	-.06130	-.09140	-.03470	-.04580	-.06260	-.01700
.299	10.153	126.24990	-.05980	-.08690	-.03250	-.04460	-.06060	-.01440
.299	12.193	126.24980	-.08710	-.11410	-.05920	-.07140	-.08750	-.04020
.300	14.219	126.68710	-.08640	-.11340	-.05920	-.07080	-.08680	-.03960
.300	16.263	126.54150	-.07970	-.10630	-.05120	-.06410	-.08010	-.03330
.300	18.293	126.54150	-.07680	-.10500	-.04900	-.06230	-.07810	-.03080
.300	20.317	126.97880	-.07530	-.09850	-.04610	-.05980	-.07610	-.02950
	GRADIENT	.00724	-.00291	-.00246	-.00379	-.00364	-.00302	-.00337

RUN NO. 616/ 0 RN/L = 3.25 GRADIENT INTERVAL = .00/ 12.00

MACH	ALPHAO	Q(PSF)	PB1	PB2	PB4	LHLS	RHLS	PCAV
.600	4.211	423.58030	-.14170	-.15230	-.10420	-.14840	-.15010	-.10930
.599	6.315	422.46280	-.18160	-.20550	-.15430	-.18070	-.18380	-.13690
.600	8.424	423.58350	-.20080	-.22430	-.19020	-.20090	-.20330	-.15450
.601	10.546	424.08230	-.22660	-.24960	-.18620	-.22710	-.22960	-.17900
.600	12.674	423.58510	-.23550	-.25930	-.18560	-.23750	-.24030	-.19030
.599	14.748	422.09200	-.23550	-.25480	-.18850	-.23750	-.23970	-.19150
.601	16.858	424.08230	-.24430	-.25860	-.20610	-.25030	-.25040	-.20470
.600	18.972	422.83640	-.27170	-.28390	-.24140	-.27900	-.27800	-.23170
.601	21.105	423.83530	-.28350	-.29490	-.28410	-.29370	-.29350	-.24680
	GRADIENT	.12466	-.01297	-.01471	-.01334	-.01214	-.01222	-.01074

ORIGINAL PAGE IS
OF POOR QUALITY

CA20 01 SI ORBITER DATA (DGN011) (20 JAN 75)

REFERENCE DATA

SREF = 2690.0000 SQ.FT. XMRP = 1109.0000 IN.XO
LREF = 474.8100 IN. YMRP = .0000 IN.YO
BREF = 936.6800 IN. ZMRP = 375.0000 IN.ZO
SCALE = .0300

PARAMETRIC DATA

ELEVON = 10.000 AILRON = .000
BETAO = .000 PHI = .000

RUN NO. 612/ 0 RN/L = 3.27 GRADIENT INTERVAL = .00/ 12.00

MACH	ALPHAO	Q(PSF)	PB1	PB2	PB4	LHLS	RHLS	PCAV
.600	4.238	423.49350	-.16540	-.18150	-.16450	-.17710	-.17100	-.15140
.599	6.342	422.74630	-.20010	-.22690	-.18900	-.20270	-.20270	-.17330
.600	8.451	422.87430	-.22740	-.25550	-.19930	-.23320	-.23090	-.19970
.599	10.597	422.75080	-.24220	-.26910	-.22090	-.24910	-.24580	-.21350
.601	12.718	424.11830	-.25180	-.27820	-.24080	-.26070	-.25650	-.22610
.599	14.781	422.62720	-.27830	-.30280	-.26480	-.28760	-.28410	-.25560
.601	16.872	424.24260	-.29980	-.32290	-.27270	-.30890	-.30500	-.27570
.599	18.936	422.37710	-.29530	-.31640	-.29840	-.30650	-.30100	-.27200
.600	21.148	423.62100	-.30340	-.32030	-.31320	-.31690	-.31110	-.28200
	GRADIENT	-.09890	-.01215	-.01374	-.00847	-.01163	-.01191	-.01003

CA20 01 SI ORBITER DATA (DGN012) (20 JAN 75)

REFERENCE DATA

SREF = 2690.0000 SQ.FT. XMRP = 1109.0000 IN.XO
LREF = 474.8100 IN. YMRP = .0000 IN.YO
BREF = 936.6800 IN. ZMRP = 375.0000 IN.ZO
SCALE = .0300

PARAMETRIC DATA

ELEVON = 5.000 AILRON = .000
ALPHAO = 10.000 BETAO = -5.000
PHI = .000

RUN NO. 605/ 0 RN/L = 3.33 GRADIENT INTERVAL = .00/ 12.00

MACH	DZ	Q(PSF)	PB1	PB2	PB4	LHLS	RHLS	PCAV
.600	1.169	423.24940	-.45250	-.44740	-.42480	-.45060	-.44770	-.43330
.600	5.634	423.61630	-.43850	-.43830	-.40080	-.43410	-.43290	-.41010
.600	10.389	423.49190	-.44000	-.43830	-.41280	-.43660	-.43490	-.41450
.600	25.346	423.37230	-.44000	-.43700	-.41680	-.43720	-.43560	-.41700
.601	40.230	424.24100	-.43630	-.43050	-.39520	-.43350	-.43090	-.41450
.601	47.384	423.86810	-.45700	-.45060	-.41850	-.45490	-.45180	-.43770
	GRADIENT	.02573	.00134	.00098	.00126	.00150	.00137	.00201

CA20 01 SI ORBITER DATA (DGN013) (20 JAN 75)

REFERENCE DATA

SREF = 2690.0000 SQ.FT. XMRP = 1109.0000 IN.XO
LREF = 474.8100 IN. YMRP = .0000 IN.YO
BREF = 936.6800 IN. ZMRP = 375.0000 IN.ZO
SCALE = .0300

PARAMETRIC DATA

ELEVON = 5.000 AILRON = .000
ALPHAO = 14.000 BETAO = -5.000
PHI = .000

RUN NO. 606/ 0 RN/L = 3.30 GRADIENT INTERVAL = .00/ 12.00

MACH	DZ	Q(PSF)	PB1	PB2	PB4	LHLS	RHLS	PCAV
.600	25.012	423.38010	-.36910	-.35400	-.38550	-.37550	-.37030	-.36550
.599	29.470	422.50390	-.37580	-.35790	-.36040	-.37920	-.37500	-.36430
.599	37.617	422.38030	-.37720	-.36180	-.36330	-.38100	-.37840	-.36740
.600	49.099	423.00110	-.37280	-.35980	-.36860	-.37730	-.37430	-.36490
.599	64.081	422.63050	-.37500	-.36760	-.35130	-.37790	-.37640	-.36610
.600	71.262	423.50760	-.38610	-.37670	-.37750	-.38770	-.38650	-.37680
	GRADIENT	.00000	.00000	.00000	.00000	.00000	.00000	.00000

CA20 01 SI ORBITER DATA (DGN014) (20 JAN 75)

REFERENCE DATA

SREF = 2690.0000 SQ.FT. XMRP = 1109.0000 IN.XO
LREF = 474.8100 IN. YMRP = .0000 IN.YO
BREF = 936.6800 IN. ZMRP = 375.0000 IN.ZO
SCALE = .0300

PARAMETRIC DATA

ELEVON = 5.000 AILRON = .000
ALPHAO = 7.500 PHI = -90.000

RUN NO. 617/ 0 RN/L = 3.29 GRADIENT INTERVAL = -5.00/ 5.00

MACH	BETAO	Q(PSF)	PB1	PB2	PB4	LHLS	RHLS	PCAV
.601	-15.806	423.56140	-.27020	-.27100	-.28010	-.27290	-.27600	-.22040
.600	-10.549	422.94290	-.29600	-.31370	-.29890	-.29180	-.30360	-.25680
.600	-7.913	423.43870	-.29820	-.31960	-.29950	-.29310	-.30160	-.26310
.601	-5.281	423.93590	-.37720	-.40450	-.35640	-.37300	-.37770	-.34980
.601	-2.654	423.56460	-.29230	-.32090	-.27160	-.28570	-.29760	-.25870
.600	-.011	423.18690	-.21700	-.23080	-.22430	-.21370	-.22150	-.17960
.601	2.618	423.56140	-.32110	-.35430	-.29610	-.31440	-.31510	-.27570
	GRADIENT	-.00072	-.00543	-.00820	-.00463	-.00542	-.00329	-.00320

CA20 02 S1 ORBITER DATA (DGN015) (20 JAN 75)

REFERENCE DATA

SREF = 2690.0000 SQ.FT. XMRP = 1109.0000 IN.XO
LREF = 474.8100 IN. YMRP = .0000 IN.YO
BREF = 936.6800 IN. ZMRP = 375.0000 IN.ZO
SCALE = .0300

PARAMETRIC DATA

ELEVON = 5.000 AILRON = .000
BETAO = -5.000 PHI = .000

RUN NO. 607/ 0 RN/L = 3.38 GRADIENT INTERVAL = .00/ 12.00

MACH	ALPHAO	Q(PSF)	PB1	PB2	PB4	LHLS	RHLS	PCAV
.599	4.229	422.23130	-.78470	-.78970	-.77100	-.09160	-.11310	-.05910
.599	6.328	422.35080	-.76110	-.78510	-.74700	-.12390	-.13400	-.10490
.600	8.482	422.73450	-.75000	-.76890	-.74530	-.23020	-.22890	-.20790
.600	10.691	422.73450	-.73750	-.75530	-.72710	-.22530	-.23500	-.20030
.600	12.706	423.60520	-.74780	-.77220	-.71800	-.21250	-.21880	-.18590
.601	14.833	423.85230	-.77150	-.79100	-.73220	-.24000	-.24840	-.21540
.600	16.936	423.36130	-.81570	-.82990	-.76360	-.33760	-.34400	-.31590
.599	19.038	422.23730	-.88590	-.89410	-.82730	-.46710	-.46990	-.44150
.601	21.209	423.98450	-.94640	-.94980	-.87400	-.60260	-.61600	-.57840
	GRADIENT	.08864	.00717	.00562	.00626	-.02389	-.02168	-.02337

CA20 02 S1 ORBITER DATA (DGN016) (20 JAN 75)

REFERENCE DATA

SREF = 2690.0000 SQ.FT. XMRP = 1109.0000 IN.XO
LREF = 474.8100 IN. YMRP = .0000 IN.YO
BREF = 936.6800 IN. ZMRP = 375.0000 IN.ZO
SCALE = .0300

PARAMETRIC DATA

ELEVON = .000 AILRON = .000
BETAO = .000 PHI = .000

RUN NO. 609/ 0 RN/L = 3.28 GRADIENT INTERVAL = .00/ 12.00

MACH	ALPHAO	Q(PSF)	PB1	PB2	PB4	LHLS	RHLS	PCAV
.599	4.212	422.91030	-.67480	-.65100	-.64230	-.10440	-.10640	-.09110
.600	6.318	423.53260	-.64820	-.64190	-.62000	-.11660	-.11990	-.10110
.600	8.418	423.16340	-.63120	-.61990	-.61890	-.13430	-.13940	-.11810
.600	10.540	423.65870	-.64970	-.64510	-.60470	-.15940	-.16430	-.14260
.600	12.677	423.53410	-.69150	-.66850	-.62060	-.16730	-.16900	-.14820
.601	14.777	424.28360	-.75160	-.73070	-.67360	-.18930	-.18580	-.16830
.600	16.898	423.91370	-.83280	-.80200	-.76180	-.20700	-.20400	-.18720
.600	18.990	423.90740	-.96720	-.93370	-.83980	-.24850	-.24710	-.22920
.600	21.120	424.16240	-1.05650	-1.01990	-.93260	-.27840	-.27740	-.25940
	GRADIENT	.08907	.00437	.00187	.00540	-.00867	-.00917	-.00814

CA20 02 S1 ORBITER DATA (DGN017) (20 JAN 75)

REFERENCE DATA

SREF = 2690.0000 SQ.FT. XMRP = 1109.0000 IN.XO
LREF = 474.8100 IN. YMRP = .0000 IN.YO
BREF = 936.6800 IN. ZMRP = 375.0000 IN.ZO
SCALE = .0300

PARAMETRIC DATA

ELEVON = 5.000 AILRON = -10.000
BETAO = .000 PHI = .000

RUN NO. 610/ 0 RN/L = 3.28 GRADIENT INTERVAL = .00/ 12.00

MACH	ALPHAO	Q(PSF)	PB1	PB2	PB4	LHLS	RHLS	PCAV
.600	4.228	423.26900	-.72500	-.72100	-.65360	-.09520	-.10570	-.08100
.600	6.329	423.64300	-.69920	-.71580	-.63660	-.10680	-.12250	-.09360
.600	8.429	423.76890	-.68880	-.70480	-.63490	-.13250	-.14810	-.11680
.600	10.561	423.89640	-.69920	-.71190	-.64620	-.15200	-.16560	-.13440
.600	12.668	423.77200	-.74130	-.74370	-.68440	-.17460	-.18380	-.15390
.600	14.791	423.52640	-.80400	-.77940	-.72880	-.19170	-.20000	-.17270
.600	16.883	423.64770	-.90290	-.86820	-.80000	-.22470	-.23160	-.20600
.601	18.999	424.39060	-1.01660	-.97320	-.90470	-.25640	-.26260	-.23740
.601	21.118	424.39370	-1.12440	-1.07440	-.99930	-.31440	-.31850	-.29770
	GRADIENT	.09511	.00415	.00181	.00112	-.00930	-.00973	-.00869

CA20 02 S1 ORBITER DATA (DGN018) (20 JAN 75)

REFERENCE DATA

SREF = 2690.0000 SQ.FT. XMRP = 1109.0000 IN.XO
LREF = 474.8100 IN. YMRP = .0000 IN.YO
BREF = 936.6800 IN. ZMRP = 375.0000 IN.ZO
SCALE = .0300

PARAMETRIC DATA

ELEVON = 5.000 AILRON = .000
BETAO = .000 PHI = .000

RUN NO. 608/ 0 RN/L = 3.28 GRADIENT INTERVAL = .00/ 12.00

MACH	ALPHAO	Q(PSF)	PB1	PB2	PB4	LHLS	RHLS	PCAV
.600	4.223	423.91840	-.75000	-.71510	-.71690	-.15200	-.15150	-.14630
.600	6.348	424.15770	-.69540	-.69370	-.67530	-.13920	-.15080	-.11740
.599	8.436	422.51660	-.70870	-.69370	-.66620	-.20150	-.20270	-.18840
.600	10.556	424.16400	-.71020	-.69110	-.67020	-.20880	-.21070	-.19590
.600	12.678	423.41980	-.73900	-.71380	-.68330	-.21250	-.21410	-.20030
.600	14.781	423.54630	-.80250	-.76570	-.73110	-.22710	-.22760	-.21540
.601	16.897	424.78870	-.90800	-.86100	-.81190	-.25460	-.25450	-.24300
.600	19.006	424.16560	-.99070	-.95180	-.90530	-.24970	-.24840	-.23930
.600	21.118	424.04430	-1.10960	-1.05740	-.97480	-.30040	-.30090	-.29080
	GRADIENT	-.02337	.00505	.00342	.00708	-.01101	-.01087	-.01040

ORIGINAL PAGE IS
OF POOR QUALITY

CA20 02 S1 ORBITER DATA (DGN019) (30 JUL 75)

REFERENCE DATA

SREF = 2690.0000 SQ.FT. XMRP = 1109.0000 IN.XO
LREF = 474.8100 IN. YMRP = .0000 IN.YO
BREF = 936.6800 IN. ZMRP = 375.0000 IN.ZO
SCALE = .0300

PARAMETRIC DATA

ELEVON = 10.000 AILRON = .000
BETAO = .000 PHI = .000

RUN NO. 611/ 0 RN/L = 3.26 GRADIENT INTERVAL = .00/ 12.00

MACH	ALPHAO	Q(PSF)	PB1	PB2	PB4	LHLS	RHLS	PCAV
.599	4.246	422.50070	-.78560	-.75410	-.72650	-.16120	-.16900	-.14260
.599	6.328	422.50220	-.75600	-.74690	-.71460	-.18620	-.19190	-.16200
.599	8.470	422.62420	-.74720	-.73720	-.70320	-.21550	-.22350	-.18970
.600	10.583	423.62250	-.76270	-.75150	-.71910	-.24240	-.25320	-.21670
.600	12.694	422.99940	-.78560	-.76900	-.73050	-.24790	-.25720	-.22110
.599	14.800	422.50220	-.84460	-.81830	-.77610	-.25640	-.26390	-.23110
.600	16.894	423.25240	-.96350	-.92590	-.84500	-.28210	-.29090	-.25750
.601	19.022	423.99560	-1.07940	-1.04190	-.94740	-.29060	-.29960	-.26630
.601	21.151	424.24730	-1.18200	-1.12880	-1.00100	-.30340	-.31240	-.27820
	GRADIENT	.16506	.00365	.00083	.00158	-.01290	-.01344	-.01182

CA20 03 S2 ORBITER DATA (DGN020) (20 JAN 75)

REFERENCE DATA

SREF = 2690.0000 SQ.FT. XMRP = 1109.0000 IN.XO
LREF = 474.8100 IN. YMRP = .0000 IN.YO
BREF = 936.6800 IN. ZMRP = 375.0000 IN.ZO
SCALE = .0300

PARAMETRIC DATA

ELEVON = 5.000 AILRON = .000
BETAO = -5.000 PHI = .000
RUDDER = .000

RUN NO. 597/ 0 RN/L = 1.92 GRADIENT INTERVAL = .00/ 12.00

MACH	ALPHAO	Q(PSF)	PB1	PB2	PB4	LHVERT	RHVERT	PCAV
.301	.013	127.12640	-.19930	-.22240	-.73500	.03160	-.24550	-.17460
.300	4.093	126.10590	-.18680	-.20420	-.73610	.03520	-.22860	-.16770
.300	6.198	126.10580	-.17640	-.19390	-.74520	.04000	-.22090	-.15640
.299	8.186	125.81440	-.16240	-.18090	-.71510	.04950	-.21030	-.14190
.300	10.206	126.10550	-.14840	-.16730	-.72590	.06030	-.19910	-.12750
.299	12.246	125.96010	-.13140	-.14980	-.70650	.07160	-.18640	-.11120
.299	14.299	125.66850	-.11370	-.13030	-.68890	.08300	-.17380	-.09360
.301	15.394	126.83460	-.10410	-.11990	-.69400	.09190	-.16460	-.08420
.299	16.289	125.66830	-.09740	-.11220	-.67580	.09550	-.15830	-.07600
.301	17.247	127.12620	-.08860	-.10050	-.68490	.10510	-.15190	-.06590
	GRADIENT	-.10638	.00499	.00537	.00140	.00276	.00449	.00466

CA20 03 S2 ORBITER DATA (DGN020) (20 JAN 75)

REFERENCE DATA

SREF = 2690.0000 SQ.FT. XMRP = 1109.0000 IN.XO
LREF = 474.8100 IN. YMRP = .0000 IN.YO
BREF = 936.6800 IN. ZMRP = 375.0000 IN.ZO
SCALE = .0300

PARAMETRIC DATA

ELEVON = 5.000 AILRON = .000
BETAO = -5.000 PHI = .000
RUDDER = .000

RUN NO. 595/ 0 RN/L = 3.30 GRADIENT INTERVAL = .00/ 12.00

MACH	ALPHAO	Q(PSF)	PB1	PB2	PB4	LHVERT	RHVERT	PCAV
.599	.035	421.64720	-.66440	-.66070	-2.76630	.08420	-.90180	-.66010
.600	4.232	422.76460	-.60900	-.60940	-2.83180	.11220	-.86520	-.61300
.601	6.365	423.13920	-.54330	-.54850	-2.84200	.15220	-.81740	-.54640
.600	8.467	422.52070	-.49020	-.49600	-2.84720	.18090	-.77380	-.49360
.600	10.623	421.89280	-.42820	-.43370	-2.81760	.22380	-.73020	-.42890
.600	12.737	422.14590	-.36990	-.37600	-2.73670	.25730	-.67810	-.36990
.599	14.875	421.52060	-.33440	-.34040	-2.54830	.25850	-.61970	-.33410
.599	16.957	421.27050	-.28500	-.28920	-2.47030	.27700	-.56910	-.28010
.599	17.897	421.51910	-.25690	-.26060	-2.42250	.29310	-.53530	-.25000
	GRADIENT	.03117	.02264	.02160	-.00549	.01324	.01657	.02216

CA20 03 S2 ORBITER DATA (DGN021) (20 JAN 75)

REFERENCE DATA

SREF = 2690.0000 SQ.FT. XMRP = 1109.0000 IN.XO
LREF = 474.8100 IN. YMRP = .0000 IN.YO
BREF = 936.6800 IN. ZMRP = 375.0000 IN.ZO
SCALE = .0300

PARAMETRIC DATA

ELEVON = 5.000 AILRON = .000
BETAO = .000 PHI = .000
RUDDER = .000

RUN NO. 592/ 0 RN/L = 1.93 GRADIENT INTERVAL = .00/ 12.00

MACH	ALPHAO	Q(PSF)	PB1	PB2	PB4	LHVERT	RHVERT	PCAV
.300	6.127	126.25070	-.16240	-.18610	-.08600	-.11940	-.08160	-.11120
.299	8.218	125.95930	-.14910	-.17180	-.07120	-.10800	-.07030	-.09610
.300	10.249	126.54240	-.13580	-.15880	-.04500	-.09850	-.05770	-.08230
.300	12.161	126.68910	-.12330	-.14520	-.02650	-.09010	-.04780	-.06970
.301	13.240	126.97970	-.11220	-.13910	-.02160	-.08480	-.04010	-.06150
.300	14.288	126.39660	-.10410	-.12900	-.00800	-.07820	-.03380	-.05210
.300	15.234	126.25050	-.09740	-.12120	.00230	-.06980	-.02880	-.04330
.300	16.234	126.54220	-.08960	-.11150	.01250	-.06210	-.02040	-.03330
.299	17.171	125.81300	-.08190	-.10110	.02330	-.05370	-.01270	-.02450
	GRADIENT	.06972	.00645	.00662	.00993	.00507	.00580	.00701

CA20 03 S2 ORBITER DATA (DGN021) (20 JAN 75)

REFERENCE DATA

SREF = 2690.0000 SQ.FT. XMRP = 1109.0000 IN.XO
LREF = 474.8100 IN. YMRP = .0000 IN.YO
BREF = 936.6800 IN. ZMRP = 375.0000 IN.ZO
SCALE = .0300

PARAMETRIC DATA

ELEVON = 5.000 AILRON = .000
BETAO = .000 PHI = .000
RUDDER = .000

RUN NO. 593/ 0 RN/L = 2.95 GRADIENT INTERVAL = .00/ 12.00

MACH	ALPHAO	Q(PSF)	PB1	PB2	PB4	LHVERT	RHVERT	PCAV
.500	.021	315.51970	-.44070	-.45060	-.29830	-.41480	-.26170	-.39000
.500	6.288	315.38310	-.36100	-.37730	-.21350	-.33900	-.20470	-.30770
.501	8.345	315.78540	-.32410	-.33580	-.17020	-.31220	-.17800	-.26690
.500	10.377	315.51740	-.28640	-.29760	-.13660	-.28350	-.14630	-.22990
.499	11.441	314.18100	-.27390	-.28330	-.10530	-.27990	-.13370	-.21540
.501	12.561	316.18530	-.25250	-.26130	-.08200	-.26620	-.11610	-.19220
.499	13.630	314.71710	-.23030	-.23990	-.06090	-.25010	-.09710	-.17080
.500	14.666	315.51820	-.20890	-.21980	-.03530	-.23400	-.08160	-.15070
.499	15.681	314.71570	-.19050	-.20100	-.01420	-.22200	-.06260	-.13190
.499	16.641	314.31610	-.17270	-.18350	.00340	-.21310	-.04500	-.11430
.500	17.602	314.98370	-.15950	-.17050	.01880	-.20290	-.03520	-.10170
	GRADIENT	-.06291	.01480	.01483	.01650	.01196	.01122	.01547

RUN NO. 594/ 0 RN/L = 3.30 GRADIENT INTERVAL = .00/ 12.00

MACH	ALPHAO	Q(PSF)	PB1	PB2	PB4	LHVERT	RHVERT	PCAV
.599	.046	421.64420	-.57880	-.57050	-.36950	-.59150	-.35030	-.54510
.600	6.384	422.64030	-.45920	-.45120	-.22830	-.48770	-.26170	-.42330
.601	8.515	422.89210	-.40460	-.39740	-.15310	-.44290	-.21670	-.36800
.600	10.508	422.38840	-.35280	-.34690	-.11500	-.40350	-.17520	-.31460
.600	11.633	422.51600	-.33070	-.32550	-.05980	-.39400	-.15260	-.28700
.600	12.738	422.39160	-.30190	-.29690	-.03190	-.37310	-.12940	-.25620
.600	13.755	422.26980	-.28130	-.27680	-.00910	-.36290	-.11180	-.23490
.601	14.842	422.89060	-.26350	-.26060	.01590	-.35460	-.09140	-.21480
.601	15.883	422.88580	-.24210	-.23990	.03700	-.33900	-.07250	-.19220
.601	16.938	423.13920	-.21410	-.21460	.06430	-.31280	-.05420	-.16450
.599	17.825	421.64570	-.18680	-.18280	.10360	-.27700	-.02040	-.12940
	GRADIENT	.07526	.02159	.02134	.02602	.01751	.01704	.02227

ORIGINAL PAGE IS
OF POOR QUALITY

DATE 01 DEC 75 TABULATED SOURCE DATA - CA20

CA20 03 S2 ORBITER DATA (DGN022) (20 JAN 75)

REFERENCE DATA

SREF = 2690.0000 SQ.FT. XMRP = 1109.0000 IN.XO
LREF = 474.8100 IN. YMRP = .0000 IN.YO
BREF = 936.6800 IN. ZMRP = 375.0000 IN.ZO
SCALE = .0300

PARAMETRIC DATA

ELEVON = 5.000 AILRON = .000
BETAO = .000 PHI = .000
RUDDER = .000

RUN NO. 591/ 0 RN/L = 3.36 GRADIENT INTERVAL = .00/ 12.00

MACH	ALPHAO	Q(PSF)	PB1	PB2	PB4	LHVERT	RHVERT	PCAV
.600	.035	422.76780	-.56990	-.58610	-.37920	-.56590	-.34260	-.53980
.600	6.359	422.52070	-.45990	-.50050	-.21460	-.41840	-.23000	-.41450
.599	8.489	421.40150	-.40380	-.43890	-.14860	-.38140	-.19560	-.36300
.599	10.617	421.52360	-.34770	-.38060	-.11390	-.34860	-.15620	-.30960
.600	12.671	422.64500	-.29530	-.32420	-.05640	-.32350	-.11400	-.25560
.601	13.745	423.14080	-.28640	-.31440	-.02900	-.32650	-.10550	-.24620
.600	14.812	422.27350	-.25910	-.28590	-.00740	-.30920	-.08370	-.21860
.599	15.797	421.27059	-.23840	-.25740	.00510	-.30980	-.06540	-.19780
.599	16.912	421.52360	-.21260	-.23020	.05980	-.28530	-.04360	-.17080
.601	17.658	422.89210	-.17270	-.18410	.11840	-.25550	-.00560	-.13130
	GRADIENT		-.13026	.02062	.01886	.02570	.02090	.01755	.02142

CA20 03 S2 ORBITER DATA (DGN023) (20 JAN 75)

REFERENCE DATA

SREF = 2690.0000 SQ.FT. XMRP = 1109.0000 IN.XO
LREF = 474.8100 IN. YMRP = .0000 IN.YO
BREF = 936.6800 IN. ZMRP = 375.0000 IN.ZO
SCALE = .0300

PARAMETRIC DATA

ELEVON = 5.000 AILRON = .000
BETAO = .000 PHI = .000
RUDDER = 15.000

RUN NO. 589/ 0 RN/L = 3.33 GRADIENT INTERVAL = .00/ 12.00

MACH	ALPHAO	Q(PSF)	PB1	PB2	PB4	LHVERT	RHVERT	PCAV
.600	6.417	422.24990	-.41790	-.44480	-.15720	-.43040	-.25680	-.40010
.600	8.452	421.62770	-.36620	-.38710	-.09790	-.40060	-.21950	-.34980
.599	10.659	421.12590	-.30660	-.32610	-.03870	-.36890	-.17520	-.29370
.599	12.653	421.37910	-.25400	-.27040	.01940	-.33790	-.12950	-.23550
.599	14.754	421.50120	-.21710	-.22560	.06150	-.32180	-.09710	-.19220
.600	15.887	421.74970	-.19570	-.20230	.10880	-.30440	-.07530	-.16900
.599	16.873	421.25550	-.16610	-.17120	.13780	-.28000	-.05000	-.13690
	GRADIENT		-.26447	.02577	.02798	.02792	.01450	.01925	.02533

CA20 05 S2 ORBITER DATA (DGN024) (20 JAN 75)

REFERENCE DATA

SREF = 2690.0000 SQ.FT. XMRP = 1109.0000 IN.XO
LREF = 474.8100 IN. YMRP = .0000 IN.YO
BREF = 936.6800 IN. ZMRP = 375.0000 IN.ZO
SCALE = .0300

PARAMETRIC DATA

ELEVON = 5.000 AILRON = .000
BETAO = -5.000 PHI = .000
RUDDER = .000

RUN NO. 598/ 0 RN/L = 3.35 GRADIENT INTERVAL = .00/ 12.00

MACH	ALPHAO	Q(PSF)	PB1	PB2	PB4	LHVERT	RHVERT	PCAV
.599	.034	421.92130	-.79580	-.77350	-.78790	.11160	-.83080	-.60230
.601	4.328	423.28870	-.79290	-.78640	-.75430	.17070	-.76890	-.53570
.599	8.452	421.54760	-.79880	-.79030	-.77260	.20180	-.73160	-.47790
.599	8.512	421.67120	-.79360	-.77990	-.77940	.23340	-.69500	-.42710
.599	10.627	421.91980	-.78700	-.76960	-.74920	.27640	-.65420	-.36240
.600	12.720	422.29190	-.80760	-.79100	-.76570	.30200	-.61340	-.30520
.599	14.896	421.79470	-.84970	-.84610	-.81240	.29670	-.55990	-.27070
.600	16.949	422.17140	-.92130	-.92910	-.89840	.31100	-.51840	-.22170
.600	17.793	422.66860	-.96490	-.97440	-.93140	.32290	-.49590	-.20030
	GRADIENT		-.04649	.00061	.00024	.00229	.01530	.01665	.02263

CA20 05 S2 ORBITER DATA (DGN025) (20 JAN 75)

REFERENCE DATA

SREF = 2690.0000 SQ.FT. XMRP = 1109.0000 IN.XO
LREF = 474.8100 IN. YMRP = .0000 IN.YO
BREF = 936.6800 IN. ZMRP = 375.0000 IN.ZO
SCALE = .0300

PARAMETRIC DATA

ELEVON = 5.000 AILRON = .000
BETAO = .000 PHI = .000
RUDDER = .000

RUN NO. 581/ 0 RN/L = 3.34 GRADIENT INTERVAL = .00/ 12.00

MACH	ALPHAO	Q(PSF)	PB1	PB2	PB4	LHVERT	RHVERT	PCAV
.601	6.364	421.06330	-.64110	-.69820	-.71980	-.44110	-.19340	-.32280
.600	8.475	420.44320	-.62400	-.70540	-.69760	-.35470	-.13930	-.25940
.600	10.577	420.69030	-.64170	-.71770	-.71610	-.34260	-.10690	-.21540
.599	12.691	419.69190	-.67530	-.74040	-.74340	-.30440	-.06120	-.16080
.599	14.815	419.81990	-.74700	-.81040	-.81420	-.29610	-.04290	-.13440
.600	16.906	420.81630	-.83930	-.90640	-.90950	-.26140	-.00420	-.08670
.600	17.617	420.94060	-.88540	-.95500	-.95820	-.24650	.01340	-.06780
	GRADIENT		-.08870	-.00014	-.00463	.00089	.02339	.02054	.02550

CA20 05 S2 ORBITER DATA (DGN026) (20 JAN 75)

REFERENCE DATA

SREF = 2690.0000 SQ.FT. XMRP = 1109.0000 IN.XO
LREF = 474.8100 IN. YMRP = .0000 IN.YO
BREF = 936.6800 IN. ZMRP = 375.0000 IN.ZO
SCALE = .0300

PARAMETRIC DATA

ELEVON = 5.000 AILRON = .000
BETAO = .000 PHI = .000
RUDDER = 15.000

RUN NO. 589/ 0 RN/L = 3.33 GRADIENT INTERVAL = .00/ 12.00

MACH	ALPHAO	Q(PSF)	PB1	PB2	PB4	LHVERT	RHVERT	PCAV
.600	6.363	422.10830	-.75900	-.78260	-.76590	-.45550	-.21810	-.32910
.600	8.467	421.98550	-.73980	-.78460	-.74770	-.38440	-.16040	-.26440
.600	10.604	421.98390	-.75230	-.79040	-.75390	-.35820	-.12030	-.21670
.600	12.707	421.73170	-.77820	-.81890	-.77100	-.32120	-.07040	-.15390
.600	14.811	421.48310	-.85500	-.88640	-.84390	-.32410	-.05210	-.12940
.600	15.867	422.22950	-.89780	-.92720	-.87980	-.30330	-.03030	-.09800
.600	16.913	422.35540	-.96130	-.99400	-.94470	-.28360	-.02110	-.07790
	GRADIENT	-.02925	.00156	-.00184	.00281	.02292	.02305	.02650

CA2J 06 S2 ORBITER DATA (DGN027) (20 JAN 75)

REFERENCE DATA

SREF = 2690.0000 SQ.FT. XMRP = 1109.0000 IN.XO
LREF = 474.8100 IN. YMRP = .0000 IN.YO
BREF = 936.6800 IN. ZMRP = 375.0000 IN.ZO
SCALE = .0300

PARAMETRIC DATA

ELEVON = 5.000 AILRON = .000
BETAO = .000 PHI = .000
RUDDER = .000

RUN NO. 582/ 0 RN/L = 3.31 GRADIENT INTERVAL = .00/ 12.00

MACH	ALPHAO	Q(PSF)	PB1	PB2	PB4	LHVERT	RHVERT	PCAV
.601	6.360	421.32300	-.77550	-.81690	-.78690	-.49180	-.22300	-.80200
.600	8.465	420.33210	-.75840	-.82340	-.79360	-.44530	-.17870	-.79630
.600	10.581	420.32910	-.77040	-.83240	-.80170	-.41480	-.14420	-.80320
.599	12.695	419.70230	-.80000	-.86230	-.83270	-.39040	-.10550	-.83340
.601	14.807	421.19870	-.87460	-.92970	-.89990	-.37660	-.08510	-.90120
.600	16.905	420.07900	-.99530	-1.04380	-1.01800	-.35870	-.06540	-1.01300
.599	17.799	419.82740	-1.04760	-1.09700	-1.07110	-.33720	-.04360	-1.06640
	GRADIENT	-.23531	.00120	-.00367	-.00351	.01824	.01867	-.00029

CA20 07 S2 ORBITER DATA (DGN028) (20 JAN 75)

REFERENCE DATA

SREF = 2690.0000 SQ.FT. XMRP = 1109.0000 IN.XO
LREF = 474.8100 IN. YMRP = .0000 IN.YO
BREF = 936.6800 IN. ZMRP = 375.0000 IN.ZO
SCALE = .0300

PARAMETRIC DATA

ELEVON = 5.000 AILRON = .000
BETAO = .000 PHI = .000
RUDDER = .000

RUN NO. 583/ 0 RN/L = 3.30 GRADIENT INTERVAL = .00/ 12.00

MACH	ALPHAO	Q(PSF)	PB1	PB2	PB4	LHVERT	RHVERT	PCAV
.601	6.339	421.70700	-.73510	-.79810	-.76700	-.45540	-.19700	-.79820
.600	8.464	420.71390	-.71400	-.80070	-.76850	-.40230	-.15190	-.79800
.601	10.590	421.67550	-.72030	-.80910	-.77730	-.37480	-.11750	-.79570
.600	12.706	421.07910	-.74870	-.82600	-.79800	-.34620	-.07810	-.82210
.600	14.793	420.21160	-.82100	-.89270	-.85590	-.33540	-.06190	-.89740
.601	16.912	421.45210	-.93660	-1.00040	-.98110	-.31580	-.03730	-1.01860
.599	17.798	419.83790	-.98560	-1.05090	-1.02760	-.29610	-.01480	-1.07260
	GRADIENT		-.02993	.00348	-.00259	-.00242	.01896	.01870	.00059

CA20 08 S2 ORBITER DATA (DGN029) (20 JAN 75)

REFERENCE DATA

SREF = 2690.0000 SQ.FT. XMRP = 1109.0000 IN.XO
LREF = 474.8100 IN. YMRP = .0000 IN.YO
BREF = 936.6800 IN. ZMRP = 375.0000 IN.ZO
SCALE = .0300

PARAMETRIC DATA

ELEVON = 5.000 AILRON = .000
BETAO = .000 PHI = .000
RUDDER = .000

RUN NO. 584/ 0 RN/L = 3.30 GRADIENT INTERVAL = .00/ 12.00

MACH	ALPHAO	Q(PSF)	PB1	PB2	PB4	LHVERT	RHVERT	PCAV
.600	6.321	421.22070	-1.05850	-1.09630	-1.07110	-.58430	-.24760	-1.07450
.600	8.437	421.08850	-1.03110	-1.10860	-1.06010	-.53720	-.21240	-1.06640
.600	10.548	421.21600	-1.01920	-1.09830	-1.04970	-.50620	-.18360	-1.06130
.600	12.674	420.72330	-1.00150	-1.08850	-1.04010	-.49000	-.15620	-1.06200
.601	14.794	421.71960	-1.02540	-1.10860	-1.05860	-.48170	-.13790	-1.09900
.599	15.422	420.10150	-1.01980	-1.10540	-1.05270	-.47630	-.13580	-1.11280
	GRADIENT		-.00114	.00930	-.00048	.00506	.01848	.01514	.00312

DATE 01 DEC 75 TABULATED SOURCE DATA - CA20

CA20 08 S2 ORBITER DATA (DGN030) (20 JAN 75)

REFERENCE DATA

SREF = 2690.0000 SQ.FT. XMRP = 1109.0000 IN.XO
LREF = 474.8100 IN. YMRP = .0000 IN.YO
BREF = 936.6800 IN. ZMRP = 375.0000 IN.ZO
SCALE = .0300

PARAMETRIC DATA

ELEVON = 5.000 AILRON = .000
BETAO = .000 PHI = .000
RUDDER = .000

RUN NO. 585/ 0 RN/L = 3.33 GRADIENT INTERVAL = .00/ 12.00

MACH	ALPHAO	Q(PSF)	PB1	PB2	PB4	LHVERT	RHVERT	PCAV
.599	6.334	420.05510	-.99030	-1.04130	-1.02620	-.40470	-.17940	-1.04200
.601	8.442	421.91930	-.94640	-1.02580	-1.00410	.63930	.17590	-1.00240
.601	10.560	421.54310	-.94700	-1.02320	-1.00480	-.36770	.15340	-.99800
.600	12.684	420.42290	-.92190	-.99790	-.98190	-.43580	.10060	-.98170
.601	14.780	421.79180	-.95550	-1.02840	-1.01660	-.42500	.02250	-1.04200
.600	16.868	421.42350	-.92140	-.99790	-.99230	-.41850	-.01620	-1.09410
.599	17.295	420.43040	-.94810	-1.03550	-1.02990	-.40590	-2.30190	-1.13930
	GRADIENT	.35164	.01024	.00428	.00506	.00836	.07867	.01040

CA20 08 S2 ORBITER DATA (DGN031) (20 JAN 75)

REFERENCE DATA

SREF = 2690.0000 SQ.FT. XMRP = 1109.0000 IN.XO
LREF = 474.8100 IN. YMRP = .0000 IN.YO
BREF = 936.6800 IN. ZMRP = 375.0000 IN.ZO
SCALE = .0300

PARAMETRIC DATA

ELEVON = 5.000 AILRON = .000
BETAO = .000 PHI = .000
RUDDER = .000

RUN NO. 586/ 0 RN/L = 3.29 GRADIENT INTERVAL = .00/ 12.00

MACH	ALPHAO	Q(PSF)	PB1	PB2	PB4	LHVERT	RHVERT	PCAV
.601	6.325	421.68170	-1.03350	-1.04000	-1.00780	3.31490	-.87520	-1.04640
.600	8.434	421.55890	-1.03580	-1.07180	-1.02850	3.26300	-.99550	-1.04950
.600	10.558	420.68650	-.99080	-1.01990	-.97460	3.26600	-.81330	-1.01620
.600	12.663	421.30540	-.97890	-1.01860	-.98270	3.28980	-.85060	-1.02130
.600	14.780	421.55570	-.97830	-1.03870	-1.01960	3.29820	-.88930	-1.07150
.600	16.870	421.18420	-.94020	-1.04590	-1.05360	3.29520	-.88500	-1.13060
.599	17.301	420.43340	-.92930	-1.04260	-1.05360	3.29160	-.88850	-1.13870
	GRADIENT	-.23528	.01010	.00477	.00786	-.01154	.01470	.00714

CA20 08 S2 ORBITER DATA (DGN032) (20 JAN 75)

REFERENCE DATA

SREF = 2690.0000 SQ.FT. XMRP = 1109.0000 IN.XO
LREF = 474.8100 IN. YMRP = .0000 IN.YO
BREF = 936.6800 IN. ZMRP = 375.0000 IN.ZO
SCALE = .0300

PARAMETRIC DATA

ELEVON = 5.000 AILRON = .000
BETAO = .000 PHI = .000
RUDDER = .000

RUN NO. 587/ 0 RN/L = 3.31 GRADIENT INTERVAL = .00/ 12.00

MACH	ALPHAO	Q(PSF)	PB1	PB2	PB4	LHVERT	RHVERT	PCAV
.599	-16.828	420.33980	-1.09390	-1.12890	-1.12440	3.38590	-.56210	-1.10420
.600	-14.701	421.22130	-1.09220	-1.13210	-1.12590	3.38300	-.52480	-1.11230
.601	-12.593	422.46230	-1.06940	-1.10620	-1.09340	3.39850	-.49740	-1.08950
.601	-10.497	422.21690	-1.05800	-1.10550	-1.08160	3.39910	-.46850	-1.08160
.599	-8.391	420.71800	-1.03700	-1.09320	-1.06680	3.37820	-.45660	-1.06520
.600	-6.286	421.46910	-1.01080	-1.07050	-1.04250	3.38950	-.53190	-1.04140
.601	.017	422.33640	-.99600	-1.04000	-1.02110	3.36500	-.63250	-1.02580
.600	6.346	421.21230	-.97200	-1.04650	-.99970	3.25520	-.70700	-.99800
.600	8.446	421.21380	-.96120	-1.03160	-.98340	3.27370	-.75000	-.98420
.600	10.563	421.59250	-.95040	-1.01800	-.97090	3.29520	-.77670	-.97100
.601	12.668	422.07990	-.94580	-1.02380	-.99340	3.31550	-.78300	-.98230
.601	14.789	422.32850	-.93500	-1.02640	-.99820	3.32990	-.78020	-1.02380
.601	16.884	422.07990	-.89570	-1.01670	-1.00930	3.33100	-.68170	-1.08090
.600	17.935	421.71470	-.84680	-.99330	-1.00630	3.33280	-.56690	-1.10790
	GRADIENT	-.08908	.00427	.00177	.00468	-.00782	-.01375	.00504

CA20 09 S2 ORBITER DATA (DGN033) (20 JAN 75)

REFERENCE DATA

SREF = 2690.0000 SQ.FT. XMRP = 1109.0000 IN.XO
LREF = 474.8100 IN. YMRP = .0000 IN.YO
BREF = 936.6800 IN. ZMRP = 375.0000 IN.ZO
SCALE = .0300

PARAMETRIC DATA

ELEVON = 5.000 AILRON = .000
BETAO = -5.000 PHI = .000

RUN NO. 599/ 0 RN/L = 3.34 GRADIENT INTERVAL = .00/ 12.00

MACH	ALPHAO	Q(PSF)	PB1	PB2	PB4	LHVERT	RHVERT	PCAV
.601	.053	423.17540	-.73310	-.71250	-.73900	.08180	-.77870	-.59720
.599	4.278	421.93180	-.72940	-.71250	-.68550	.14580	-.71120	-.50300
.600	6.376	422.05390	-.75590	-.71510	-.68940	.17610	-.69360	-.46600
.600	8.549	422.05240	-.77880	-.71450	-.69120	.21250	-.66620	-.41580
.599	10.609	421.80370	-.80540	-.72350	-.70710	.25130	-.63170	-.36110
.600	12.776	422.17740	-.82090	-.76630	-.73440	.28110	-.58530	-.30330
.600	14.839	422.42900	-.88000	-.83510	-.82210	.26500	-.54800	-.27880
.599	17.052	421.92730	-.96860	-.94270	-.90980	.28230	-.50370	-.22670
.601	17.477	423.17230	-.99370	-.97250	-.93820	.28950	-.49520	-.21860
	GRADIENT	-.11473	-.00707	-.00086	.00303	.01586	.01346	.02108

CA20 747/1 CARRIER DATA (DGN034) (20 JAN 75)

REFERENCE DATA

SREF = 5500.0000 SQ.FT. XMRP = 1339.9000 IN.XO
LREF = 327.7800 IN. YMRP = .0000 IN.YC
BREF = 2348.0400 IN. ZMRP = 190.8000 IN.ZC
SCALE = .0300

PARAMETRIC DATA

BETAC = -5.000 ELV-IB = .000
ELV-OB = 3.000 RUD-U = .000
RUD-L = .000 RUD747 = .000

RUN NO. 853/ 0 RN/L = 3.27 GRADIENT INTERVAL = -1.00/ 5.00

MACH	ALPHAW	PSC
.600	-.081	1675.99100
.600	1.899	1675.27299
.601	3.842	1674.48300
.599	5.788	1676.35001
.600	7.724	1674.91200
.600	9.637	1675.12601
.601	11.602	1674.84100
.600	13.552	1675.63000
	GRADIENT	-.38439

CA20 747/1 CARRIER DATA (DGN035) (20 JAN 75)

REFERENCE DATA

SREF = 5500.0000 SQ.FT. XMRP = 1339.9000 IN.XO
LREF = 327.7800 IN. YMRP = .0000 IN.YC
BREF = 2348.0400 IN. ZMRP = 190.8000 IN.ZC
SCALE = .0300

PARAMETRIC DATA

BETAC = .000 ELV-IB = .000
ELV-OB = 3.000 RUD-U = .000
RUD-L = .000 RUD747 = .000

RUN NO. 852/ 0 RN/L = 3.31 GRADIENT INTERVAL = -1.00/ 5.00

MACH	ALPHAW	PSC
.600	.000	1675.41600
.600	1.947	1676.20700
.600	3.860	1675.84599
.600	5.828	1676.06200
.600	7.852	1676.20599
.599	9.685	1676.20599
.600	11.561	1675.12700
	GRADIENT	.11228

CA20 747/1 CARRIER DATA (DGN036) (20 JAN 75)

REFERENCE DATA

SREF =	5500.0000 SQ.FT.	XMRP =	1339.9000 IN.XO		
LREF =	327.7800 IN.	YMRP =	.0000 IN.YC		
BREF =	2348.0400 IN.	ZMRP =	190.8000 IN.ZC		
SCALE =	.0300				

PARAMETRIC DATA

BETAC =	5.000	ELV-IB =	.000
ELV-OB =	3.000	RUD-U =	.000
RUD-L =	.000	RUD747 =	.000

RUN NO. 854/ 0 RN/L = 3.27 GRADIENT INTERVAL = -1.00/ 5.00

MACH	ALPHAR	PSC
.600	-.083	1676.20700
.600	1.884	1676.06200
.600	3.844	1675.93001
.601	5.798	1674.76900
.600	7.700	1675.34200
.600	9.668	1674.98399
.600	11.584	1675.34300
	GRADIENT	-.05527

CA20 747/1 01 SI ORBITER DATA (DGN037) (20 JAN 75)

REFERENCE DATA

SREF =	2690.0000 SQ.FT.	XMRP =	1109.0000 IN.XO		
LREF =	474.8100 IN.	YMRP =	.0000 IN.YO		
BREF =	936.6800 IN.	ZMRP =	375.0000 IN.ZO		
SCALE =	.0300				

PARAMETRIC DATA

ALPHAC =	4.000	BETAC =	.000
ELV-IB =	.000	ELV-OB =	3.000
ELEVON =	5.000	BETAO =	.000
PHI =	.000	DX =	.000
DY =	.000	DZ =	7.500

RUN NO. 851/ 0 RN/L = 3.29 GRADIENT INTERVAL = -1.00/ 4.00

MACH	ALPHAO	Q(PSF)	PB1	PB2	PB4	LHLS	RHLS	PCAV
.599	6.201	421.10090	-.26570	-.25220	-.26010	-.26190	-.23830	-1.98510
.599	8.330	420.98030	-.28420	-.27680	-.28800	-.29060	-.25110	-2.11890
.601	10.305	422.72200	-.30260	-.29490	-.30970	-.31140	-.26650	-2.26710
.600	12.627	422.47330	-.29600	-.28850	-.30450	-.30470	-.25450	-2.57230
.601	14.759	422.72350	-.31440	-.30140	-.32050	-.31630	-.26990	-2.69600
.601	16.873	422.72670	-.34400	-.32930	-.35290	-.34310	-.29890	-2.65770
.600	18.983	421.60260	-.35580	-.32480	-.35010	-.33760	-.28000	-2.46550
	GRADIENT	.00000	.00000	.00000	.00000	.00000	.00000	.00000

ORIGINAL PAGE IS
OF POOR QUALITY

CA20 747/1 01 S1 ORBITER DATA (DGN038) (20 JAN 75)

REFERENCE DATA

SREF =	2690.0000 SQ.FT.	XMRP =	1109.0000 IN.XO		
LREF =	474.8100 IN.	YMRP =	.0000 IN.YO		
BREF =	936.6800 IN.	ZMRP =	375.0000 IN.ZO		
SCALE =	.0300				

PARAMETRIC DATA

ALPHAC =	4.000	ELV-IB =	.000
ELV-OB =	3.000	ELEVON =	5.000
ALPHA =	10.000	BETAO =	.000
PHI =	.000	DX =	.000
DY =	.000	DZ =	7.500

RUN NO. 850/ 0 RN/L = 3.33 GRADIENT INTERVAL = -5.00/ 5.00

MACH	BETA	Q(PSF)	PB1	PB2	PB4	LHLS	RHLS	PCAV
.600	-9.976	422.47650	-.35730	-.33970	-.34950	-.33460	-.33930	-2.24570
.600	-6.964	421.73070	-.34320	-.33000	-.33700	-.32420	-.32310	-2.29160
.599	-4.978	420.98180	-.31670	-.30790	-.31310	-.30530	-.29550	-2.27960
.600	-3.007	422.10030	-.31590	-.30860	-.31310	-.30950	-.29220	-2.33110
.600	-1.992	422.47330	-.31520	-.30990	-.31360	-.31200	-.28950	-2.36000
.600	-1.008	422.47170	-.29230	-.28780	-.29320	-.29310	-.26590	-2.32300
.601	.007	422.71720	-.32030	-.31700	-.32100	-.32110	-.29150	-2.33990
.600	1.014	422.47170	-.31000	-.30790	-.31250	-.31380	-.27940	-2.29470
.600	2.013	421.84820	-.31000	-.30660	-.31140	-.31380	-.27870	-2.28090
.600	2.989	421.72470	-.31150	-.30990	-.31360	-.31750	-.28140	-2.25140
.600	4.984	422.21990	-.33580	-.33320	-.33700	-.34190	-.30560	-2.18920
.601	9.990	422.59610	-.36980	-.37140	-.37740	-.38100	-.33990	-2.05670
	GRADIENT	.04889	-.00115	-.00185	-.00175	-.00297	-.00013	.01127

CA20 747/1 01 S1 ORBITER DATA (DGN039) (20 JAN 75)

REFERENCE DATA

SREF =	2690.0000 SQ.FT.	XMRP =	1109.0000 IN.XO		
LREF =	474.8100 IN.	YMRP =	.0000 IN.YO		
BREF =	936.6900 IN.	ZMRP =	375.0000 IN.ZO		
SCALE =	.0300				

PARAMETRIC DATA

ALPHAC =	4.000	ELV-IB =	.000
ELV-OB =	3.000	ELEVON =	5.000
ALPHA =	10.000	BETAO =	.000
PHI =	.000	DX =	.000
DY =	10.000	DZ =	7.500

RUN NO. 648/ 0 RN/L = 3.35 GRADIENT INTERVAL = -5.00/ 5.00

MACH	BETA	Q(PSF)	PB1	PB2	PB4	LHLS	RHLS	PCAV
.599	-9.977	421.20800	-.35430	-.35910	-.35980	-.34980	-.34400	-1.73770
.599	-6.964	420.96080	-.35650	-.36170	-.35460	-.35170	-.33790	-1.62340
.600	-5.008	421.71260	-.34250	-.34750	-.33870	-.33890	-.32040	-1.60080
.599	-3.000	420.83580	-.32260	-.32870	-.31650	-.32110	-.29750	-1.57190
.600	-2.007	421.96020	-.32400	-.33060	-.31540	-.32360	-.29750	-1.56240
.599	-1.006	421.08290	-.33360	-.33970	-.32330	-.33340	-.30490	-1.57060
.600	.025	421.70960	-.33730	-.34160	-.32500	-.33520	-.30830	-1.56750
.600	1.019	421.83580	-.33730	-.34160	-.32330	-.33580	-.30560	-1.56620
.600	2.013	421.45980	-.33220	-.33580	-.31650	-.33090	-.29960	-1.55300
.599	2.991	421.08990	-.33360	-.33840	-.31820	-.33340	-.30090	-1.54490
.599	5.113	420.96680	-.31590	-.32150	-.30050	-.31870	-.28070	-1.52540
.600	9.990	421.93490	-.34690	-.35330	-.33020	-.34800	-.31370	-1.52410
	GRADIENT	.01891	-.00190	-.00148	-.00027	-.00193	-.00055	.00370

CA20 747/0 01 S1 AT38 AT39 ORBITER DATA (DGN040) (20 JAN 75)

REFERENCE DATA

SREF =	2690.0000 SQ.FT.	XMRP =	1109.0000 IN.XO		
LREF =	474.8100 IN.	YMRP =	.0000 IN.YO		
BREF =	936.6900 IN.	ZMRP =	375.0000 IN.ZO		
SCALE =	.0300				

PARAMETRIC DATA

ALPHAC =	.000	BETAC =	.000
ELV-IB =	.000	ELV-OB =	3.000
ELEVON =	5.000	MACH =	.600
BETAO =	.000	PHI =	.000
DX =	.000	DY =	.000

RUN NO. 619/ 0 RN/L = 3.37 GRADIENT INTERVAL = -1.00/ 4.00

ALPHAO	DZ	Q(PSF)	PB1	PB2	PB4	LHLS	RHLS	PCAV
8.543	1.907	422.63400	-.31530	-.35530	-.30120	-.30100	-.31850	-.25690
8.536	4.846	423.62640	-.29530	-.31310	-.25680	-.28640	-.29690	-.23740
8.531	9.288	422.63550	-.30270	-.31250	-.24140	-.29490	-.30360	-.24560
8.529	17.091	422.88110	-.31230	-.31900	-.25280	-.30470	-.31370	-.25750
8.525	31.807	422.38530	-.31380	-.31700	-.26420	-.31020	-.31640	-.26310
8.523	38.614	423.13210	-.30710	-.30800	-.26760	-.30230	-.30840	-.25690
	GRADIENT	.00000	.00000	.00000	.00000	.00000	.00000	.00000

CA20 747/0 01 SI AT38 AT39 ORBITER DATA (DGN041) (20 JAN 75)

REFERENCE DATA

SREF = 2690.0000 SQ.FT. XMRP = 1109.0000 IN.XO
LREF = 474.8100 IN. YMRP = .0000 IN.YO
BREF = 936.6800 IN. ZMRP = 375.0000 IN.ZO
SCALE = .0300

PARAMETRIC DATA

ALPHAC = 4.000 BETAC = .000
ELV-IB = .000 ELV-OB = 3.000
ELEVON = 5.000 MACH = .600
BETAO = .000 PHI = .000
DX = .000 DY = .000

RUN NO. 621/ 0 RN/L = 3.27 GRADIENT INTERVAL = -1.00/ 4.00

ALPHAO	DZ	Q(PSF)	PB1	PB2	PB4	LHLS	RHLS	PCAV
12.656	.965	422.78310	-.32340	-.32030	-.37580	-.35360	-.32920	-.35980
12.650	4.780	422.90510	-.29460	-.29240	-.35070	-.32360	-.29960	-.33220
12.648	8.551	422.90660	-.29680	-.29430	-.33250	-.32490	-.30160	-.33350
12.651	15.655	423.65470	-.30860	-.30540	-.36720	-.33520	-.31370	-.35110
12.672	30.855	424.15050	-.27610	-.27550	-.32740	-.30530	-.28280	-.31710
12.678	45.578	423.90020	-.28940	-.28980	-.33710	-.31870	-.29760	-.33220
12.678	60.229	423.28000	-.27830	-.27680	-.33760	-.30710	-.28610	-.32340
	GRADIENT	.00000	.00000	.00000	.00000	.00000	.00000	.00000

CA20 747/0 01 SI AT38 AT39 ORBITER DATA (DGN042) (20 JAN 75)

REFERENCE DATA

SREF = 2690.0000 SQ.FT. XMRP = 1109.0000 IN.XO
LREF = 474.8100 IN. YMRP = .0000 IN.YO
BREF = 936.6800 IN. ZMRP = 375.0000 IN.ZO
SCALE = .0300

PARAMETRIC DATA

ALPHAC = 8.000 BETAC = .000
ELV-IB = .000 ELV-OB = 3.000
ELEVON = 5.000 MACH = .600
BETAO = .000 PHI = .000
DX = .000 DY = .000

RUN NO. 620/ 0 RN/L = 3.33 GRADIENT INTERVAL = -1.00/ 4.00

ALPHAO	DZ	Q(PSF)	PB1	PB2	PB4	LHLS	RHLS	PCAV
16.829	3.116	422.77710	-.32410	-.34170	-.33370	-.33100	-.32850	-.30400
16.828	6.039	422.90210	-.32560	-.34230	-.33820	-.33400	-.33120	-.30710
16.849	18.388	424.02930	-.33890	-.34100	-.34330	-.35970	-.34870	-.34100
16.864	32.988	424.27160	-.33740	-.33450	-.37180	-.36090	-.34470	-.34790
16.870	48.151	422.65650	-.32780	-.32350	-.36040	-.35480	-.33800	-.34670
16.886	63.071	423.27690	-.32040	-.31250	-.37010	-.34870	-.33120	-.34980
	GRADIENT	.00000	.00000	.00000	.00000	.00000	.00000	.00000

CA20 747/0 01 S1 AT38 AT39 ORBITER DATA (DGN043) (20 JAN 75)

REFERENCE DATA

SREF =	2690.0000 SQ.FT.	XMRP =	1109.0000 IN.XO		
LREF =	474.8100 IN.	YMRP =	.0000 IN.YO		
BREF =	936.6800 IN.	ZMRP =	375.0000 IN.ZO		
SCALE =	.0300				

PARAMEYRIC DATA

ALPHAC =	4.000	BETAC =	-5.000
ELV-IB =	.000	ELV-OB =	3.000
ELEVON =	5.000	MACH =	.600
BETAO =	-5.000	PHI =	.000
DX =	.000	DY =	.000

RUN NO. 622/ 0 RN/L = 3.34 GRADIENT INTERVAL = -1.00/ 4.00

ALPHAO	DZ	Q(PSF)	PB1	PB2	PB4	LHLS	RHLS	PCAV
12.644	1.130	422.53590	-.46220	9.77950	-.43680	-.44510	-.47130	-.40130
12.623	4.337	422.66550	-.47110	9.81130	-.44190	-.45430	-.48000	-.40700
12.617	8.510	422.79050	-.46000	9.86450	-.42710	-.44270	-.46930	-.39440
12.618	16.134	423.16720	-.46440	9.86840	-.42940	-.44700	-.47400	-.39880
12.630	31.004	422.42280	-.45630	9.86980	-.42080	-.43970	-.46390	-.39190
12.635	46.251	422.91410	-.47400	9.88330	-.42650	-.45920	-.48140	-.41390
12.638	60.055	422.54190	-.46300	9.89820	-.43280	-.45060	-.46930	-.40950
	GRADIENT	.00000	.00000	.00000	.00000	.00000	.00000	.00000

CA20 747/0 02 S1 AT38 AT39 ORBITER DATA (DGN044) (20 JAN 75)

REFERENCE DATA

SREF =	2690.0000 SQ.FT.	XMRP =	1109.0000 IN.XO		
LREF =	474.8100 IN.	YMRP =	.0000 IN.YO		
BREF =	936.6800 IN.	ZMRP =	375.0000 IN.ZO		
SCALE =	.0300				

PARAMETRIC DATA

ALPHAC =	4.000	BETAC =	-5.000
ELV-IB =	.000	ELV-OB =	3.000
ELEVON =	5.000	MACH =	.600
BETAO =	-5.000	PHI =	.000
DX =	.000	DY =	.000

RUN NO. 623/ 0 RN/L = 3.33 GRADIENT INTERVAL = -1.00/ 4.00

ALPHAO	DZ	Q(PSF)	PB1	PB2	PB4	LHLS	RHLS	PCAV
12.689	1.078	423.68930	-.25400	-.81370	-.78580	-.83900	-.28680	-.25250
12.667	4.227	423.93170	-.29900	-.82670	-.76930	-.84140	-.29890	-.24930
12.664	8.517	424.55340	-.30050	-.83580	-.78180	-.84140	-.30090	-.25060
12.671	16.093	423.93960	-.30270	-.84350	-.80010	-.85550	-.30500	-.25750
12.680	31.112	423.31180	-.26210	-.83190	-.79610	-.83840	-.28820	-.24180
12.697	46.160	423.81050	-.28800	-.84940	-.78180	-.85610	-.30630	-.26500
12.700	60.200	423.06020	-.28800	-.83390	-.79320	-.84390	-.30230	-.26560
	GRADIENT	.00000	.00000	.00000	.00000	.00000	.00000	.00000

DATE 01 DEC 75 TABULATED SOURCE DATA - CA20

CA20 747/1 01 S1 AT38 AT39 ORBITER DATA (DGN045) (20 JAN 75)

REFERENCE DATA

SREF =	2690.0000 SQ.FT.	XMRP =	1109.0000 IN.XO		
LREF =	474.8100 IN.	YMRP =	.0000 IN.YO		
BREF =	936.6800 IN.	ZMRP =	375.0000 IN.ZO		
SCALE =	.0300				

PARAMETRIC DATA

ALPHAC =	.000	BETAC =	.000
ELV-1B =	.000	ELV-OB =	3.000
ELEVON =	5.000	MACH =	.600
BETAO =	.000	PHI =	.000
DX =	.000	DY =	.000

RUN NO. 627/ 0 RN/L = 3.23 GRADIENT INTERVAL = -1.00/ 4.00

ALPHAO	DZ	Q(PSF)	PB1	PB2	PB4	LHLS	RHLS	PCAV
8.542	.714	423.28310	-.27620	-.28330	-.28530	-.29000	-.28070	-.28200
8.528	3.692	422.53740	-.26060	-.26710	-.28240	-.27230	-.26460	-.26500
8.518	8.066	423.15520	-.25920	-.26520	-.28190	-.27110	-.26260	-.26380
8.507	15.605	422.65650	-.25550	-.26190	-.27900	-.26870	-.26060	-.26190
8.501	30.694	423.03170	-.25100	-.25610	-.27220	-.26440	-.25580	-.25810
8.499	36.458	424.27320	-.26430	-.26910	-.26820	-.27720	-.26930	-.27190
	GRADIENT		-.25041	.00524	.00544	.00097	.00594	.00541	.00571

CA20 747/1 01 S1 AT38 AT39 ORBITER DATA (DGN046) (20 JAN 75)

REFERENCE DATA

SREF =	2690.0000 SQ.FT.	XMRP =	1109.0000 IN.XO		
LREF =	474.8100 IN.	YMRP =	.0000 IN.YO		
BREF =	936.6800 IN.	ZMRP =	375.0000 IN.ZO		
SCALE =	.0300				

PARAMETRIC DATA

ALPHAC =	4.000	BETAC =	.000
ELV-1B =	.000	ELV-OB =	3.000
ELEVON =	5.000	MACH =	.600
BETAO =	.000	PHI =	.000
DX =	.000	DY =	.000

RUN NO. 625/ 0 RN/L = 3.33 GRADIENT INTERVAL = -1.00/ 4.00

ALPHAO	DZ	Q(PSF)	PB1	PB2	PB4	LHLS	RHLS	PCAV
12.932	1.832	424.14730	-.31970	-.36050	-.31720	-.31690	-.32650	-.28950
12.928	4.902	423.89710	-.30130	-.33780	-.29950	-.30100	-.30770	-.27260
12.919	9.333	423.02720	-.32190	-.35660	-.32230	-.32420	-.32920	-.29390
12.922	16.287	423.39970	-.31310	-.34040	-.30460	-.31510	-.32110	-.28320
12.928	31.736	423.02570	-.29830	-.32160	-.28810	-.30100	-.30700	-.26750
12.931	46.536	423.39650	-.30050	-.31900	-.27560	-.30280	-.30900	-.26820
12.938	61.653	423.14770	-.29170	-.30600	-.27790	-.29190	-.29890	-.25810
	GRADIENT		.00000	.00000	.00000	.00000	.00000	.00000	.00000

ORIGINAL PAGE IS OF POOR QUALITY

DATE 01 DEC 75 TABULATED SOURCE DATA - CA20

CA20 747/1 01 S1 AT38 AT39 ORBITER DATA (DGN047) (20 JAN 75)

REFERENCE DATA

SREF =	2690.0000 SQ.FT.	XMRP =	1109.0000 IN.XO
LREF =	474.8100 IN.	YMRP =	.0000 IN.YO
BREF =	936.6800 IN.	ZMRP =	375.0000 IN.ZO
SCALE =	.0300		

PARAMETRIC DATA

ALPHAC =	8.000	BETAC =	.000
ELV-1B =	.000	ELV-OB =	3.000
ELEVON =	5.000	MACH =	.600
BETAO =	.000	PHI =	.000
DX =	.000	DY =	.000

RUN NO. 626/ 0 RN/L = 3.25 GRADIENT INTERVAL = -1.00/ 4.00

ALPHAO	DZ	Q(PSF)	PB1	PB2	PB4	LHLS	RHLS	PCAV
16.841	.924	423.62400	-.34260	-.35080	-.34340	-.34010	-.34540	-.31590
16.843	3.722	424.13940	-.31900	-.32680	-.28980	-.32550	-.32320	-.29450
16.845	8.201	423.64050	-.34330	-.35080	-.31430	-.35230	-.34740	-.32660
16.850	15.692	422.64900	-.33520	-.33910	-.32120	-.34500	-.34000	-.31840
16.865	30.700	423.01950	-.34700	-.34820	-.35420	-.35840	-.35090	-.33720
16.875	45.718	423.14150	-.35000	-.34950	-.36270	-.36330	-.35550	-.34600
16.891	61.155	423.01660	-.32780	-.32610	-.34220	-.34010	-.33330	-.32660
16.891	67.037	423.14460	-.32190	-.31970	-.34560	-.33650	-.32720	-.32660
16.891	75.245	424.01670	-.32930	-.32680	-.35360	-.34500	-.33460	-.33850
	GRADIENT	.21994	.00843	.00858	.01916	.00808	.00793	.00785

CA20 747/1 01 S1 AT38 AT39 ORBITER DATA (DGN048) (20 JAN 75)

REFERENCE DATA

SREF =	2690.0000 SQ.FT.	XMRP =	1109.0000 IN.XO
LREF =	474.8100 IN.	YMRP =	.0000 IN.YO
BREF =	936.6800 IN.	ZMRP =	375.0000 IN.ZO
SCALE =	.0300		

PARAMETRIC DATA

ALPHAC =	4.000	BETAC =	-5.000
ELV-1B =	.000	ELV-OB =	3.000
ELEVON =	5.000	MACH =	.600
BETAO =	-5.000	PHI =	.000
DX =	.000	DY =	.000

RUN NO. 624/ 0 RN/L = 3.34 GRADIENT INTERVAL = -1.00/ 4.00

ALPHAO	DZ	Q(PSF)	PB1	PB2	PB4	LHLS	RHLS	PCAV
12.701	.950	424.18510	-.42680	-.45650	-.41510	-.40420	-.43830	-.37930
12.684	4.036	423.62460	-.43270	-.45260	-.42590	-.41460	-.44500	-.38500
12.674	8.306	423.31030	-.45190	-.46550	-.44240	-.43480	-.46390	-.40190
12.674	15.805	423.43930	-.44010	-.44870	-.42990	-.42320	-.45110	-.38940
12.679	30 896	422.65980	-.43790	-.44150	-.41850	-.42260	-.44700	-.38810
12.680	45.974	423.06020	-.44600	-.44740	-.40940	-.43420	-.45580	-.40000
12.692	60.286	424.54240	-.46370	-.46230	-.42310	-.45550	-.47130	-.42770
	GRADIENT	.00000	.00000	.00000	.00000	.00000	.00000	.00000

CA20 747/1 01 S1 ORBITER DATA (DGN049) (20 JAN 75)

REFERENCE DATA

SREF =	2690.0000 SQ.FT.	XMRP =	1109.0000 IN.XO		
LREF =	474.8100 IN.	YMRP =	.0000 IN.YO		
BREF =	936.6800 IN.	ZMRP =	375.0000 IN.ZO		
SCALE =	.0300				

PARAMETRIC DATA

ALPHAC =	.000	BETAC =	.000
ELV-IB =	.000	ELV-OB =	3.000
ELEVON =	5.000	MACH =	.600
BETAO =	.000	PHI =	.000
DX =	.000	DY =	.000

RUN NO. 631/ 0 RN/L = 3.24 GRADIENT INTERVAL = -1.00/ 4.00

ALPHAO	DZ	Q(PSF)	PB1	PB2	PB4	LHLS	RHLS	PCAV
6.312	-1.419	422.11270	-.24960	-.26390	-.21870	-.24850	-.25310	-.21100
6.292	1.466	422.11120	-.22220	-.23730	-.23060	-.22040	-.22550	-.18210
6.279	6.074	421.98610	-.23480	-.24830	-.22830	-.23270	-.23770	-.19410
6.271	13.645	422.11270	-.23040	-.24310	-.22260	-.22900	-.23360	-.19090
6.270	16.388	422.35990	-.23410	-.24510	-.21520	-.23390	-.23700	-.19530
6.269	23.904	422.98250	-.22960	-.24120	-.22260	-.22960	-.23430	-.19340
	GRADIENT	.00000	.00000	.00000	.00000	.00000	.00000	.00000

RUN NO. 628/ 0 RN/L = 3.29 GRADIENT INTERVAL = -1.00/ 4.00

ALPHAO	DZ	Q(PSF)	PB1	PB2	PB4	LHLS	RHLS	PCAV
10.637	1.272	422.62950	-.26730	-.30990	-.25280	-.25400	-.27470	-.20660
10.614	3.983	422.13220	-.26210	-.30210	-.24370	-.25100	-.27000	-.20030
10.601	6.941	422.75450	-.24510	-.28010	-.21980	-.23270	-.25180	-.17770
10.592	9.629	422.62800	-.29240	-.32220	-.26140	-.27780	-.29760	-.22230
10.583	15.194	423.87500	-.26360	-.29110	-.23010	-.25160	-.27000	-.19280
10.585	20.698	423.50200	-.25770	-.27100	-.22550	-.25100	-.26190	-.19410
10.582	26.325	424.12370	-.26660	-.27950	-.21920	-.25950	-.27200	-.20350
10.566	31.999	422.99980	-.27390	-.29110	-.23350	-.26380	-.27810	-.20470
10.560	37.416	422.12920	-.27320	-.28920	-.22550	-.26320	-.27740	-.20350
10.561	42.935	423.87190	-.29310	-.30730	-.24090	-.28330	-.29760	-.22420
10.566	48.066	422.12620	-.26060	-.27230	-.21240	-.25220	-.26530	-.19410
	GRADIENT	-.18349	.00192	.00288	.00336	.00111	.00173	.00232

RUN NO. 630/ 0 RN/L = 3.25 GRADIENT INTERVAL = -1.00/ 4.00

ALPHAO	DZ	Q(PSF)	PB1	PB2	PB4	LHLS	RHLS	PCAV
14.838	3.701	421.99360	-.30270	-.31640	-.27580	-.30290	-.30700	-.25940
14.820	6.608	422.11720	-.29530	-.30860	-.26990	-.29430	-.29890	-.25120
14.798	11.326	423.86240	-.28060	-.29500	-.26190	-.27970	-.28550	-.23800
14.777	18.752	421.99360	-.30130	-.31380	-.28360	-.29980	-.30630	-.25750
14.759	33.074	422.36440	-.29610	-.31060	-.27050	-.29490	-.30090	-.25370
14.751	48.459	423.36350	-.30860	-.31970	-.28870	-.30650	-.31310	-.26630
14.740	63.690	423.98520	-.28350	-.29310	-.25050	-.28090	-.28820	-.24180
	GRADIENT	.00000	.00000	.00000	.00000	.00000	.00000	.00000

CA20 747/1 01 SI ORBITER DATA (DGN050) (20 JAN 75)

REFERENCE DATA

SREF =	2690.0000 SQ.FT.	XMRP =	1109.0000 IN.XO		
LREF =	474.8100 IN.	YMRP =	.0000 IN.YO		
BREF =	936.6900 IN.	ZMRP =	375.0000 IN.ZO		
SCALE =	.0300				

PARAMETRIC DATA

ALPHAC =	.000	DETAC =	.000
ELV-IB =	.000	ELV-OB =	3.000
ELEVON =	5.000	MACH =	.600
DETAO =	.000	PHI =	.000
DX =	10.000	DY =	.000

RUN NO. 636/ 0 RN/L = 3.25 GRADIENT INTERVAL = -1.00/ 4.00

ALPHAO	DZ	Q(PSF)	PB1	PB2	PB4	LHLS	RHLS	PCAV
6.250	.172	423.18370	-.25170	-.26250	-.22380	-.24670	-.25580	-.19910
6.243	3.541	422.43590	-.20370	-.21650	-.17710	-.19840	-.20740	-.15070
6.236	7.711	422.81060	-.24360	-.25670	-.20330	-.23870	-.24910	-.19210
6.238	15.213	423.68100	-.24280	-.25460	-.19700	-.23970	-.24840	-.19210
6.237	18.581	422.06060	-.21040	-.21990	-.16800	-.20520	-.21340	-.15950
6.239	24.078	422.08210	-.20520	-.21620	-.16170	-.20150	-.21010	-.15540
	GRADIENT	-.22198	.01425	.01355	.01386	.01434	.01437	.01437

RUN NO. 637/ 0 RN/L = 3.24 GRADIENT INTERVAL = -1.00/ 4.00

ALPHAO	DZ	Q(PSF)	PB1	PB2	PB4	LHLS	RHLS	PCAV
10.523	2.219	421.94000	-.25760	-.26900	-.23740	-.25400	-.26260	-.20910
10.509	5.391	422.44180	-.26420	-.27620	-.22770	-.26130	-.26930	-.21660
10.498	9.749	422.94130	-.27460	-.28720	-.22720	-.27110	-.27870	-.22670
10.491	17.197	422.43730	-.27750	-.29040	-.24820	-.27480	-.28210	-.23110
10.487	32.470	422.69580	-.28860	-.30140	-.24800	-.28640	-.29350	-.24430
10.486	39.016	423.16590	-.27460	-.28520	-.26420	-.27360	-.27940	-.23170
10.484	47.260	422.69030	-.27750	-.28720	-.24310	-.27540	-.28280	-.23480
	GRADIENT	.00000	.00000	.00000	.00000	.00000	.00000	.00000

RUN NO. 638/ 0 RN/L = 3.23 GRADIENT INTERVAL = -1.00/ 4.00

ALPHAO	DZ	Q(PSF)	PB1	PB2	PB4	LHLS	RHLS	PCAV
14.710	4.969	423.31280	-.26350	-.27290	-.24770	-.26260	-.26660	-.22350
14.694	8.249	422.81220	-.26200	-.26970	-.23170	-.26070	-.26460	-.22230
14.680	12.695	423.68580	-.25760	-.26580	-.22550	-.25650	-.25990	-.21980
14.671	20.170	422.93340	-.27020	-.27810	-.24200	-.26930	-.27400	-.23360
14.656	35.008	421.80890	-.27750	-.28720	-.25450	-.27780	-.28210	-.24240
14.656	50.142	422.81060	-.28570	-.29110	-.26760	-.28390	-.28950	-.25050
14.648	64.911	423.43240	-.27460	-.27810	-.26420	-.27360	-.27940	-.24050
	GRADIENT	.00000	.00000	.00000	.00000	.00000	.00000	.00000

CA20 747/1 01 SI ORBITER DATA (DGNOSI) (20 JAN 75)

REFERENCE DATA

SREF =	2690.0000 SQ.FT.	XMRP =	1109.0000 IN.XO		
LREF =	474.8100 IN.	YMRP =	.0000 IN.YO		
BREF =	936.6800 IN.	ZMRP =	375.0000 IN.ZO		
SCALE =	.0300				

PARAMETRIC DATA

ALPHAC =	.000	BETAC =	.000
ELV-IB =	.000	ELV-OB =	3.000
ELEVON =	5.000	MACH =	.600
BETAO =	.000	PHI =	.000
DX =	20.000	DY =	.000

RUN NO. 641/ 0 RN/L = 3.24 GRADIENT INTERVAL = -1.00/ 4.00

ALPHAO	DZ	Q(PSF)	PB1	PB2	PB4	LHLS	RHLS	PCAV
6.190	8.425	422.82360	-.21480	-.22430	-.16280	-.20760	-.21480	-.16520
6.192	11.568	421.95280	-.21120	-.22170	-.18620	-.20700	-.21270	-.16390
6.193	16.022	422.95260	-.20450	-.21460	-.18050	-.20090	-.20670	-.15890
6.197	23.581	422.20290	-.20600	-.21390	-.17420	-.20330	-.20800	-.16250
	GRADIENT	.00000	.00000	.00000	.00000	.00000	.00000	.00000

RUN NO. 640/ 0 RN/L = 3.25 GRADIENT INTERVAL = -1.00/ 4.00

ALPHAO	DZ	Q(PSF)	PB1	PB2	PB4	LHLS	RHLS	PCAV
10.406	10.347	422.32800	-.23480	-.25930	-.21690	-.22960	-.24240	-.18590
10.407	13.221	422.95110	-.23920	-.26120	-.22030	-.23380	-.24640	-.18840
10.409	17.990	422.57510	-.24070	-.26060	-.22150	-.23510	-.24780	-.18900
10.410	25.437	422.07640	-.24360	-.26190	-.22370	-.23750	-.24980	-.19220
10.413	40.457	422.57510	-.24950	-.26580	-.22030	-.24360	-.25520	-.19780
10.411	46.554	422.32200	-.25180	-.26770	-.21240	-.24730	-.25790	-.20090
	GRADIENT	.00000	.00000	.00000	.00000	.00000	.00000	.00000

RUN NO. 639/ 0 RN/L = 3.30 GRADIENT INTERVAL = -1.00/ 4.00

ALPHAO	DZ	Q(PSF)	PB1	PB2	PB4	LHLS	RHLS	PCAV
14.618	13.230	422.81730	-.22890	-.26190	-.21520	-.22040	-.23770	-.18400
14.617	16.279	423.19190	-.21560	-.24890	-.20720	-.21060	-.22690	-.17390
14.616	20.672	423.81830	-.24730	-.27810	-.23970	-.24240	-.25990	-.20600
14.614	28.161	423.94420	-.25180	-.28200	-.24480	-.24910	-.26460	-.21160
14.610	43.380	423.81670	-.25910	-.28720	-.25050	-.25640	-.27130	-.21850
14.607	58.256	422.94320	-.25180	-.27420	-.24080	-.24790	-.26190	-.20910
14.604	68.990	423.44690	-.25180	-.26770	-.23910	-.24610	-.26060	-.20790
	GRADIENT	.00000	.00000	.00000	.00000	.00000	.00000	.00000

CA20 747/1 01 S1 ORBITER DATA (DG1052) (20 JAN 75)

REFERENCE DATA

SREF =	2690.0000 SQ.FT.	XMRP =	1109.0000 IN.XO
LREF =	474.8100 IN.	YMRP =	.0000 IN.YO
BREF =	936.6900 IN.	ZMRP =	375.0000 IN.ZO
SCALE =	.0300		

PARAMETRIC DATA

ALPHAC =	4.000	BETAC =	.000
ELV-1B =	.000	ELV-GB =	3.000
ELEVON =	5.000	MACH =	.800
BETAO =	.000	PHI =	.000
DX =	.000	DY =	.000

RUN NO. 632/ 0 RN/L = 3.24 GRADIENT INTERVAL = -1.00/ 4.00

ALPHAO	DZ	Q(PSF)	PB1	PB2	PB4	LHLS	RHLS	PCAV
6.161	-3.400	423.72550	-.25620	-.26970	-.24430	-.25650	-.26060	-.22040
6.159	-.517	423.60430	-.25330	-.26650	-.24710	-.25220	-.25790	-.21600
6.165	3.831	423.23130	-.26800	-.28140	-.26990	-.26750	-.27270	-.23170
6.178	11.707	422.48040	-.22820	-.24050	-.23230	-.22720	-.23230	-.19150
6.203	24.148	422.73050	-.24440	-.25480	-.24650	-.24490	-.24910	-.20960
	GRADIENT	-.08579	-.00339	-.00343	-.00524	-.00352	-.00340	-.00351

RUN NO. 646/ 0 RN/L = 3.24 GRADIENT INTERVAL = -1.00/ 4.00

ALPHAO	DZ	Q(PSF)	PB1	PB2	PB4	LHLS	RHLS	PCAV
10.487	1.956	422.96970	-.33300	-.34550	-.29660	-.33030	-.33660	-.29200
10.482	6.349	423.71450	-.32630	-.33900	-.29040	-.32420	-.32990	-.28700
10.480	13.746	422.34450	-.31300	-.32540	-.29550	-.31080	-.31710	-.27530
10.493	29.253	422.09430	-.29930	-.30990	-.28910	-.29650	-.30160	-.26060
10.497	34.651	422.96970	-.31010	-.32220	-.29650	-.30830	-.31370	-.27320
10.501	44.044	423.21080	-.31230	-.32350	-.28990	-.31020	-.31710	-.27570
	GRADIENT	.00000	.00000	.00000	.00000	.00000	.00000	.00000

RUN NO. 647/ 0 RN/L = 3.24 GRADIENT INTERVAL = -1.00/ 4.00

ALPHAO	DZ	Q(PSF)	PB1	PB2	PB4	LHLS	RHLS	PCAV
14.823	.973	424.08900	-.34630	-.35460	-.30860	-.34370	-.34810	-.31460
14.799	3.966	422.97120	-.32040	-.32930	-.30740	-.31930	-.32320	-.28630
14.785	8.718	423.71600	-.31160	-.32220	-.29950	-.31080	-.31510	-.27880
14.777	16.055	423.71450	-.31600	-.32540	-.30400	-.31500	-.31980	-.28320
14.774	31.103	423.95310	-.32930	-.33710	-.31820	-.32650	-.33260	-.29700
14.771	45.934	422.35050	-.32340	-.33060	-.32510	-.32300	-.32790	-.29200
14.768	60.784	422.21940	-.31970	-.32410	-.31200	-.31750	-.32330	-.28820
	GRADIENT	-.37344	.00855	.00845	.00040	.00915	.00832	.00945

DATE 01 DEC 75 TABULATED SOURCE DATA - CA20

CA20 747/1 01 SI ORBITER DATA (DGN053) (20 JAN 75)

REFERENCE DATA

SREF =	2690.0000 SQ.FT.	XMRP =	1109.0000 IN.XO		
LREF =	474.8100 IN.	YMRP =	.0000 IN.YO		
BREF =	936.6800 IN.	ZMRP =	375.0000 IN.ZO		
SCALE =	.0300				

PARAMETRIC DATA

ALPHAC =	4.000	BETAC =	.000
ELV-IB =	.000	ELV-OB =	3.000
ELEVON =	5.000	MACH =	.600
BETAO =	.000	PHI =	.000
DX =	10.000	DY =	.000

ORIGINAL PAGE IS OF POOR QUALITY

RUN NO. 635/ 0 RN/L = 3.27 GRADIENT INTERVAL = -1.00/ 4.00

ALPHAO	DZ	Q(PSF)	PB1	PB2	PB4	LHLS	RHLS	PCAV
6.127	-3.556	423.11270	-.23470	-.26710	-.21520	-.23330	-.24780	-.18650
6.127	-.595	423.54570	-.23480	-.26120	-.21070	-.23140	-.24510	-.18340
6.134	3.736	423.54730	-.23400	-.25540	-.20780	-.22960	-.24300	-.18080
6.151	11.277	422.92870	-.22810	-.24630	-.20100	-.22410	-.23560	-.17460
6.169	17.788	423.05310	-.23690	-.25220	-.20950	-.23260	-.24440	-.18270
	GRADIENT	.00037	-.00000	.00134	.00067	.00042	.00048	.00060

RUN NO. 694/ 0 RN/L = 3.23 GRADIENT INTERVAL = -1.00/ 4.00

ALPHAO	DZ	Q(PSF)	PB1	PB2	PB4	LHLS	RHLS	PCAV
10.448	-1.201	424.99130	-.30410	-.30340	-.32050	-.31140	-.30020	-.29630
10.431	1.842	424.98280	-.28860	-.29040	-.30630	-.29670	-.28610	-.28190
10.432	6.408	425.72710	-.29300	-.29490	-.30970	-.29980	-.29010	-.28570
10.436	13.966	424.60970	-.27900	-.28130	-.29550	-.28570	-.27600	-.27190
10.455	28.936	425.35270	-.28490	-.28650	-.30120	-.29060	-.28140	-.27750
10.476	43.999	424.73570	-.27680	-.27680	-.29260	-.28210	-.27260	-.26870
10.477	48.276	424.85859	-.28050	-.28070	-.29550	-.28570	-.27530	-.27250
	GRADIENT	.00000	.00000	.00000	.00000	.00000	.00000	.00000

RUN NO. 693/ 0 RN/L = 3.23 GRADIENT INTERVAL = -1.00/ 4.00

ALPHAO	DZ	Q(PSF)	PB1	PB2	PB4	LHLS	RHLS	PCAV
14.751	1.086	425.10400	-.27530	-.27420	-.28980	-.28450	-.27130	-.26870
14.731	4.167	424.35820	-.28200	-.28200	-.29660	-.29120	-.27800	-.27560
14.724	8.638	424.85380	-.29080	-.29170	-.30350	-.29790	-.28680	-.28320
14.722	16.335	425.09930	-.30110	-.30080	-.31200	-.30650	-.29620	-.29190
14.722	31.320	424.22710	-.30780	-.30660	-.31940	-.31320	-.30290	-.29890
14.727	46.516	424.85220	-.31810	-.31700	-.32910	-.32170	-.31170	-.30950
14.727	61.207	424.10660	-.30040	-.29880	-.31090	-.30340	-.29420	-.29070
	GRADIENT	.00000	.00000	.00000	.00000	.00000	.00000	.00000

CA20 747/1 01 S1 ORBITER DATA (DGN054) (20 JAN 75)

REFERENCE DATA

SREF =	2690.0000 SQ.FT.	XMRP =	1109.0000 IN.XO
LREF =	474.8100 IN.	YMRP =	.0000 IN.YO
BREF =	936.6800 IN.	ZMRP =	375.0000 IN.ZO
SCALE =	.0300		

PARAMETRIC DATA

ALPHAC =	4.000	BETAC =	.000
ELV-IB =	.000	ELV-OB =	3.000
ELEVON =	5.000	MACH =	.600
BETAO =	.000	PHI =	.000
DX =	20.000	DY =	.000

RUN NO. 642/ 0 RN/L = 3.22 GRADIENT INTERVAL = -1.00/ 4.00

ALPHAO	DZ	Q(PSF)	PB1	PB2	PB4	LHLS	RHLS	PCAV
6.093	2.348	421.95280	-.21120	-.21980	-.19360	-.20880	-.21270	-.17140
6.103	5.577	422.20440	-.21260	-.22040	-.19470	-.20680	-.21340	-.17270
6.111	9.878	422.07540	-.22090	-.22680	-.19930	-.21920	-.22280	-.18270
6.132	17.481	422.57810	-.21650	-.22490	-.18670	-.21670	-.22020	-.18340
6.145	25.850	422.70010	-.20380	-.21000	-.19130	-.20330	-.20670	-.16890
	GRADIENT	.00000	.00000	.00000	.00000	.00000	.00000	.00000

RUN NO. 677/ 0 RN/L = 3.28 GRADIENT INTERVAL = -1.00/ 4.00

ALPHAO	DZ	Q(PSF)	PB1	PB2	PB4	LHLS	RHLS	PCAV
10.302	4.428	424.12200	-.26360	-.26450	-.27560	-.26990	-.25930	-.25130
10.309	7.499	424.62300	-.25470	-.25740	-.26710	-.26140	-.25120	-.24250
10.316	11.549	424.24360	-.25330	-.25680	-.26540	-.25890	-.24980	-.24060
10.336	19.513	424.24520	-.25920	-.26130	-.26990	-.26320	-.25390	-.24500
10.357	34.554	424.37270	-.26060	-.26190	-.27390	-.26630	-.25660	-.24750
10.367	48.107	424.61830	-.26800	-.26970	-.27950	-.27300	-.26400	-.25500
	GRADIENT	.00000	.00000	.00000	.00000	.00000	.00000	.00000

RUN NO. 676/ 0 RN/L = 3.27 GRADIENT INTERVAL = -1.00/ 4.00

ALPHAO	DZ	Q(PSF)	PB1	PB2	PB4	LHLS	RHLS	PCAV
14.565	7.759	423.74230	-.27390	-.27170	-.28410	-.28090	-.26870	-.26190
14.565	10.920	424.86700	-.23850	-.23730	-.24830	-.24490	-.23300	-.22550
14.575	15.111	423.74230	-.25250	-.25160	-.26140	-.25930	-.24650	-.23930
14.571	22.922	425.24000	-.24730	-.24570	-.25750	-.25160	-.24040	-.23300
14.590	37.645	423.36850	-.22210	-.27850	-.29150	-.28540	-.27470	-.26820
14.589	52.832	423.49820	-.27020	-.26780	-.27620	-.27180	-.26260	-.25500
14.705	68.281	424.74260	-.28720	-.28460	-.29440	-.28930	-.27680	-.27140
	GRADIENT	.00000	.00000	.00000	.00000	.00000	.00000	.00000

CA20 747/1 01 S1 ORBITER DATA (DGN055) (20 JAN 75)

REFERENCE DATA

SREF =	2690.0000 SQ.FT.	XMRP =	1109.0000 IN.XO		
LREF =	474.8100 IN.	YMRP =	.0000 IN.YO		
BREF =	936.6800 IN.	ZMRP =	375.0000 IN.ZO		
SCALE =	.0300				

PARAMETRIC DATA

ALPHAC =	8.000	BETAC =	.000
ELV-IB =	.000	ELV-OB =	3.000
ELEVON =	5.000	MACH =	.600
BETAO =	.000	PHI =	.000
DX =	.000	DY =	.000

RUN NO. 633/ 0 RN/L = 3.23 GRADIENT INTERVAL = -1.00/ 4.00

ALPHAO	DZ	Q(PSF)	PB1	PB2	PB4	LHLS	RHLS	PCAV
5.939	-.987	421.97860	-.27540	-.28660	-.25800	-.27660	-.28070	-.24240
5.987	1.851	422.35390	-.27910	-.28980	-.25510	-.27970	-.28410	-.24560
6.027	6.647	423.59640	-.26290	-.27430	-.22660	-.26440	-.26800	-.22990
6.074	14.133	422.22880	-.24660	-.25550	-.21810	-.24670	-.25050	-.21290
6.098	18.812	423.10220	-.25180	-.26130	-.21520	-.25340	-.25650	-.21920
6.122	24.109	423.47530	-.22740	-.23670	-.21870	-.22960	-.23230	-.19530
	GRADIENT	.13225	-.00130	-.00113	.00102	-.00109	-.00120	-.00113

RUN NO. 645/ 0 RN/L = 3.25 GRADIENT INTERVAL = -1.00/ 4.00

ALPHAO	DZ	Q(PSF)	PB1	PB2	PB4	LHLS	RHLS	PCAV
10.299	-2.897	422.46960	-.38320	-.40000	-.36090	-.37920	-.38780	-.33910
10.303	.285	423.34140	-.35220	-.36690	-.32960	-.34740	-.35620	-.30520
10.323	4.651	423.48110	-.35910	-.37400	-.33650	-.35410	-.36290	-.31400
10.355	12.183	423.46890	-.35590	-.37080	-.33310	-.35110	-.35880	-.30900
10.431	27.416	423.71130	-.31380	-.32800	-.29390	-.30960	-.31910	-.26880
10.459	42.286	423.59540	-.30120	-.31440	-.28350	-.29920	-.30700	-.25680
10.464	47.714	422.64320	-.30050	-.31250	-.28240	-.29730	-.30570	-.25680
	GRADIENT	.00000	.00000	.00000	.00000	.00000	.00000	.00000

RUN NO. 644/ 0 RN/L = 3.28 GRADIENT INTERVAL = -1.00/ 4.00

ALPHAO	DZ	Q(PSF)	PB1	PB2	PB4	LHLS	RHLS	PCAV
14.701	-.738	423.71290	-.35730	-.39870	-.34670	-.35050	-.36360	-.32150
14.691	2.335	423.46110	-.32780	-.36040	-.31430	-.32480	-.33600	-.28820
14.699	6.812	423.83880	-.33960	-.37020	-.32510	-.33700	-.34740	-.29950
14.714	14.542	422.96820	-.33150	-.35910	-.31480	-.32850	-.33930	-.28950
14.743	29.472	423.71130	-.33220	-.35780	-.31540	-.33030	-.34000	-.28950
14.754	44.335	423.21550	-.35510	-.38120	-.33990	-.35470	-.36490	-.31650
14.762	59.151	423.33520	-.32260	-.34160	-.30520	-.31990	-.33190	-.27820
	GRADIENT	-.08195	.00990	.01247	.01054	.00836	.00998	.01084

CA20 747/1 01 S1 ORBITER DATA (DGNC56) (20 JAN 75)

REFERENCE DATA

SREF =	2690.0000 SQ.FT.	XMRP =	1169.0000 IN.XO		
LREF =	474.8100 IN.	YMRP =	.0000 IN.YO		
BREF =	935.6800 IN.	ZMRP =	379.0000 IN.ZO		
SCALE =	.0300				

PARAMETRIC DATA

ALPHAC =	8.000	BETAC =	.000
ELV-IB =	.000	ELV-OB =	3.000
ELEVON =	5.000	MACH =	.600
BETAO =	.000	PHI =	.000
DX =	10.000	DY =	.000

RUN NO. 634/ 0 RN/L = 3.30 GRADIENT INTERVAL = -1.00/ 4.00

ALPHAO	DZ	Q(PSF)	PB1	PB2	PB4	LHLS	RHLS	PCAV
5.917	-2.[illegible]58	421.91910	-.18160	-.23600	-.17820	-.18200	-.19860	-.14940
5.956	.903	423.54100	-.21260	-.26590	-.20900	-.21370	-.23020	-.18020
5.994	5.537	422.17370	-.19490	-.24500	-.19070	-.19780	-.21340	-.16140
6.038	12.664	422.[illegible]3950	-.22070	-.26900	-.21580	-.22530	-.24030	-.18710
6.070	19.121	422.17070	-.21180	-.25480	-.20440	-.21490	-.23020	-.17640
6.098	25.727	422.29500	-.20890	-.25020	-.20040	-.21250	-.22690	-.17270
	GRADIENT	.00006	.00000	.00000	.00000	.00000	.00000	.00000

RUN NO. 691/ 0 RN/L = 3.24 GRADIENT INTERVAL = -1.00/ 4.00

ALPHAO	DZ	Q(PSF)	PB1	PB2	PB4	LHLS	RHLS	PCAV
10.217	-2.770	424.10660	-.32330	-.32150	-.32970	-.32850	-.31840	-.30640
10.225	.202	425.22680	-.30410	-.30400	-.31030	-.30930	-.29950	-.28820
10.258	5.005	425.10720	-.31960	-.31960	-.32570	-.32300	-.31440	-.30200
10.289	12.254	424.65850	-.31150	-.31240	-.31710	-.31500	-.30700	-.29380
10.356	27.323	424.35820	-.29600	-.29690	-.30290	-.29850	-.29080	-.27940
10.401	42.555	423.98610	-.27900	-.27810	-.28590	-.28210	-.27330	-.26240
10.410	48.530	425.10720	-.28710	-.28590	-.29380	-.29000	-.28070	-.27120
	GRADIENT	.00000	.00000	.00000	.00000	.00000	.00000	.00000

RUN NO. 692/ 0 RN/L = 3.23 GRADIENT INTERVAL = -1.00/ 4.00

ALPHAO	DZ	Q(PSF)	PB1	PB2	PB4	LHLS	RHLS	PCAV
14.599	-.266	424.35820	-.28860	-.28720	-.29890	-.29550	-.28340	-.27690
14.597	2.610	424.23010	-.31960	-.31890	-.33020	-.32660	-.31500	-.30830
14.613	7.478	424.73410	-.29230	-.29230	-.30230	-.29980	-.28810	-.28130
14.633	14.672	425.10400	-.33510	-.33580	-.34390	-.34010	-.32920	-.32650
14.673	29.795	424.72630	-.32400	-.32280	-.33360	-.32850	-.31840	-.31330
14.695	44.753	424.47870	-.33580	-.33380	-.34550	-.34010	-.32850	-.32770
14.712	59.602	425.72710	-.31740	-.31440	-.32620	-.32050	-.30960	-.30580
	GRADIENT	-.04455	-.01078	-.01102	-.01089	-.01082	-.01099	-.01092

DATE 01 DEC 75 TABULATED SOURCE DATA - CA20

CA20 747/1 01 S1 ORBITER DATA (DGN057) (20 JAN 75)

REFERENCE DATA

SREF =	2690.0000 SQ.FT.	XMRP =	1109.0000 IN.XO		
LREF =	474.8100 IN.	YMRP =	.0000 IN.YO		
BREF =	936.6800 IN.	ZMRP =	375.0000 IN.ZO		
SCALE =	.0300				

PARAMETRIC DATA

ALPHAC =	8.000	BETAC =	.000
ELV-IB =	.000	ELV-OB =	3.000
ELEVON =	5.000	MACH =	.600
BETAO =	.000	PHI =	.000
DX =	20.000	DY =	.000

RUN NO. 643/ 0 RN/L = 3.22 GRADIENT INTERVAL = -1.00/ 4.00

ALPHAO	DZ	Q(PSF)	PB1	PB2	PB4	LHLS	RHLS	PCAV
5.918	-3.193	423.70340	-.20890	-.21650	-.19980	-.20760	-.20870	-.17580
5.942	-.094	423.70190	-.21040	-.21850	-.18050	-.21000	-.21070	-.17830
5.973	4.408	423.08020	-.18530	-.19250	-.17540	-.18560	-.18650	-.15380
6.011	11.874	423.33040	-.18010	-.18600	-.17140	-.18070	-.18180	-.14950
6.079	26.802	423.19820	-.18750	-.19250	-.17990	-.18990	-.19120	-.15830
	GRADIENT	.00000	.00000	.00000	.00000	.00000	.00000	.00000

RUN NO. 674/ 0 RN/L = 3.27 GRADIENT INTERVAL = -1.00/ 4.00

ALPHAO	DZ	Q(PSF)	PB1	PB2	PB4	LHLS	RHLS	PCAV
10.226	-1.405	423.98490	-.27980	-.27880	-.28470	-.28520	-.27540	-.26190
10.235	1.641	424.85440	-.27540	-.27430	-.27900	-.28030	-.27070	-.25690
10.253	6.023	424.73000	-.27690	-.27620	-.28020	-.28150	-.27200	-.25750
10.290	13.703	424.99190	-.29020	-.28980	-.29500	-.29370	-.28550	-.27070
10.351	28.615	423.85840	-.24950	-.24830	-.25280	-.25220	-.24310	-.22930
10.395	43.888	425.09990	-.27250	-.27100	-.27790	-.27660	-.26670	-.25380
10.403	49.633	423.98340	-.27980	-.27620	-.28530	-.28340	-.27340	-.26190
	GRADIENT	.00000	.00000	.00000	.00000	.00000	.00000	.00000

RUN NO. 675/ 0 RN/L = 3.27 GRADIENT INTERVAL = -1.00/ 4.00

ALPHAO	DZ	Q(PSF)	PB1	PB2	PB4	LHLS	RHLS	PCAV
14.444	1.517	424.98860	-.28800	-.28460	-.29670	-.29430	-.28280	-.27320
14.457	4.549	423.86740	-.27320	-.27100	-.28020	-.27970	-.26800	-.25820
14.478	9.043	424.11590	-.27690	-.27560	-.28360	-.28270	-.27140	-.26190
14.497	16.873	424.36640	-.30120	-.30150	-.30750	-.30530	-.29560	-.28580
14.563	31.919	424.11280	-.28350	-.28140	-.29040	-.28700	-.27740	-.26820
14.607	46.722	425.23520	-.29680	-.29440	-.30410	-.29990	-.29020	-.28080
14.699	62.461	423.86590	-.27910	-.27690	-.28300	-.28030	-.27140	-.26130
	GRADIENT	.00000	.00000	.00000	.00000	.00000	.00000	.00000

CA20 747/1 01 SI ORBITER DATA (DGN058) (20 JAN 75)

REFERENCE DATA

SREF =	2690.0000 SQ.FT.	XMRP =	1109.0000 IN.XO		
LREF =	474.8100 IN.	YMRP =	.0000 IN.YO		
BREF =	936.6800 IN.	ZMRP =	375.0000 IN.ZO		
SCALE =	.0300				

PARAMETRIC DATA

ALPHAC =	4.000	BETAC =	.000
ELV-IB =	.000	ELV-OB =	3.000
ELEVON =	5.000	MACH =	.600
BETAO =	.000	PHI =	.000
DX =	.000	DY =	10.000

RUN NO. 775/ 0 RN/L = 3.33 GRADIENT INTERVAL = -1.00/ 4.00

ALPHAO	DZ	Q(PSF)	PB1	PB2	PB4	LHLS	RHLS	PCAV
10.536	-1.419	423.75080	-.34400	-.35210	-.34280	-.33950	-.33940	.73920
10.526	1.326	423.75390	-.33000	-.33980	-.32340	-.32360	-.32520	.79440
10.524	5.838	424.11900	-.32480	-.33390	-.31660	-.31750	-.32120	.81200
10.524	13.085	422.69110	-.30710	-.31770	-.29610	-.30160	-.30300	.82770
10.536	28.495	423.62330	-.31820	-.32870	-.30540	-.31200	-.31440	.83460
10.542	43.191	424.36450	-.30860	-.32090	-.29510	-.30160	-.30570	.88800
10.542	47.091	424.24020	-.31230	-.32480	-.29720	-.30410	-.30770	.90180
	GRADIENT	.00000	.00000	.00000	.00000	.00000	.00000	.00000

RUN NO. 781/ 0 RN/L = 3.22 GRADIENT INTERVAL = -1.00/ 4.00

ALPHAO	DZ	Q(PSF)	PB1	PB2	PB4	LHLS	RHLS	PCAV
14.685	1.432	424.51880	-.35810	-.34690	-.36270	-.35970	-.35010	1.25230
14.649	5.001	423.64690	-.33300	-.32090	-.33940	-.33520	-.32590	1.25100
14.643	8.890	424.14270	-.33440	-.32290	-.34220	-.33770	-.32790	1.24410
14.834	16.716	424.14110	-.34260	-.33200	-.35080	-.34620	-.33670	1.21270
14.831	29.965	424.38970	-.32190	-.31250	-.32460	-.32300	-.31380	1.24280
14.830	31.354	424.01520	-.33740	-.32740	-.34560	-.34070	-.33130	1.21960
14.828	46.543	423.64690	-.32120	-.31320	-.32860	-.32420	-.31510	1.24970
14.820	61.677	423.15070	-.31300	-.30280	-.31690	-.30780	-.30700	1.28490
	GRADIENT	.00000	.00000	.00000	.00000	.00000	.00000	.00000

CA20 747/1 01 SI ORBITER DATA (DGN059) (20 JAN 75)

REFERENCE DATA

SREF =	2690.0000 SQ.FT.	XMRP =	1109.0000 IN.XO		
LREF =	474.8100 IN.	YMRP =	.0000 IN.YO		
BREF =	936.6800 IN.	ZMRP =	375.0000 IN.ZO		
SCALE =	.0300				

PARAMETRIC DATA

ALPHAC =	4.000	BETAC =	.000
ELV-IB =	.000	ELV-OB =	3.000
ELEVON =	5.000	MACH =	.600
BETAO =	.000	PHI =	.000
DX =	10.000	DY =	10.000

RUN NO. 735/ 0 RN/L = 3.31 GRADIENT INTERVAL = -1.00/ 4.00

ALPHAO	DZ	Q(PSF)	PB1	PB2	PB4	LHLS	RHLS	PCAV
10.410	-2.369	423.29300	-.31750	-.32800	-.31660	-.31320	-.31040	-1.02870
10.404	1.142	424.16710	-.30270	-.31310	-.30240	-.29980	-.29700	-1.01670
10.407	5.650	423.91680	-.29390	-.30410	-.29150	-.29060	-.28750	-1.00360
10.424	13.193	424.16080	-.28800	-.29760	-.28640	-.28510	-.28150	-.99540
10 437	27.965	423.78930	-.27840	-.28660	-.27620	-.27540	-.27140	-.99410
10.445	42.957	423.29150	-.28500	-.29500	-.28020	-.28210	-.27880	-1.00730
10.450	46.957	423.79250	-.28570	-.29500	-.27900	-.28210	-.27880	-1.00670
	GRADIENT	.00000	.00000	.00000	.00000	.00000	.00000	.00000

RUN NO. 738/ 0 RN/L = 3.24 GRADIENT INTERVAL = -1.00/ 4.00

ALPHAO	DZ	Q(PSF)	PB1	PB2	PB4	LHLS	RHLS	PCAV
14.679	-.128	424.04910	-.34040	-.33190	-.33770	-.34500	-.33330	-.85530
14.671	3.023	423.92150	-.28060	-.27160	-.27850	-.28700	-.27410	-.79760
14.668	7.553	423.92630	-.29170	-.28330	-.28930	-.29730	-.28480	-.80450
14.673	14.858	424.54640	-.28720	-.27810	-.26470	-.29250	-.27950	-.80700
14.673	30.066	423.79560	-.29680	-.28850	-.29870	-.30280	-.29020	-.82270
14.682	44.947	424.54800	-.30790	-.29950	-.30920	-.31320	-.30170	-.83780
14.683	59.957	424.42050	-.30640	-.29690	-.30690	-.30890	-.29970	-.84280
	GRADIENT	-.04048	.01897	.01913	.01878	.01840	.01878	.01831

CA20 747/1 01 S1 ORBITER DATA (DGN060) (20 JAN 75)

REFERENCE DATA

SREF =	2690.0000 SQ.FT.	XMRP =	1109.0000 IN.XO		
LREF =	474.8100 IN.	YMRP =	.0000 IN.YO		
BREF =	936.6800 IN.	ZMRP =	375.0000 IN.ZO		
SCALE =	.0300				

PARAMETRIC DATA

ALPHAC =	8.000	BETAC =	.000
ELV-IB =	.000	ELV-OB =	3.000
ELEVON =	5.000	MACH =	.600
BETAO =	.000	PHI =	.000
DX =	.000	DY =	10.000

RUN NO. 780/ 0 RN/L = 3.24 GRADIENT INTERVAL = -1.00/ 4.00

ALPHAO	DZ	Q(PSF)	PB1	PB2	PB4	LHLS	RHLS	PCAV
10.362	-1.757	423.77440	-.35880	-.35010	-.35480	-.35780	-.35080	.82520
10.376	.812	424.14430	-.36770	-.35920	-.36550	-.36700	-.36020	.81520
10.393	5.122	422.65040	-.35220	-.34300	-.34910	-.35110	-.34340	.81830
10.433	12.363	423.77120	-.34990	-.34100	-.34650	-.34990	-.34070	.80390
10.490	27.651	423.01960	-.36180	-.35470	-.36220	-.36210	-.35420	.75490
10.511	42.980	423.39170	-.31600	-.30930	-.31550	-.31570	-.30770	.81700
10.512	46.793	422.76800	-.30050	-.29180	-.29900	-.29920	-.29090	.82580
	GRADIENT	.00000	.00000	.00000	.00000	.00000	.00000	.00000

RUN NO. 787/ 0 RN/L = 3.18 GRADIENT INTERVAL = -1.00/ 4.00

ALPHAO	DZ	Q(PSF)	PB1	PB2	PB4	LHLS	RHLS	PCAV
14.755	.306	424.27490	-.38980	-.37800	-.41680	-.39870	-.39580	1.14110
14.757	3.230	423.40220	-.35810	-.34750	-.38550	-.36940	-.35480	1.16310
14.765	7.681	424.52670	-.36180	-.35080	-.38950	-.37370	-.35820	1.15930
14.743	15.148	424.61320	-.33150	-.32030	-.35990	-.34380	-.32780	1.16810
14.783	15.393	424.64310	-.33890	-.32740	-.36730	-.35050	-.33530	1.15970
14.805	30.352	424.27330	-.33740	-.32550	-.36610	-.34810	-.33330	1.16750
14.814	45.218	424.02460	-.33080	-.31770	-.35820	-.33950	-.32520	1.19070
14.814	60.205	423.77280	-.32260	-.30730	-.34850	-.32360	-.31710	1.23220
	GRADIENT	-.25548	.01064	.01043	.01071	.01002	.01060	.00752

CA20 747/1 01 S1 ORBITER DATA (DGN061) (20 JAN 75)

REFERENCE DATA

SREF =	2690.0000 SQ.FT.	XMRP =	1109.0000 IN.XO
LREF =	474.8100 IN.	YMRP =	.0000 IN.YO
BREF =	936.6800 IN.	ZMRP =	375.0000 IN.ZO
SCALE =	.0300		

PARAMETRIC DATA

ALPHAC =	8.000	BETAC =	.000
ELV-IB =	.000	ELV-OB =	3.000
ELEVON =	5.000	MACH =	.600
BETAO =	.000	PHI =	.000
DX =	10.000	DY =	10.000

RUN NO. 736/ 0 RN/L = 3.27 GRADIENT INTERVAL = -1.00/ 4.00

ALPHAO	DZ	Q(PSF)	PB1	PB2	PB4	LHLS	RHLS	PCAV
10.233	-3.822	423.67110	-.31900	-.32220	-.30460	-.31570	-.31250	-.95210
10.250	-.443	423.16640	-.30790	-.31120	-.29380	-.30530	-.30170	-.93700
10.273	3.946	424.41260	-.31750	-.31900	-.30180	-.31380	-.31040	-.94890
10.306	11.425	423.42250	-.33230	-.33190	-.31770	-.32790	-.32390	-.96650
10.370	26.395	423.04590	-.32780	-.32550	-.31380	-.32420	-.31920	-.97530
10.405	41.249	423.91530	-.28500	-.28010	-.26880	-.28090	-.27540	-.95080
10.417	47.343	423.91680	-.30720	-.30340	-.29210	-.30410	-.29900	-.97840
	GRADIENT	.28389	-.00219	-.00178	-.00182	-.00194	-.00198	-.00271

RUN NO. 737/ 0 RN/L = 3.24 GRADIENT INTERVAL = -1.00/ 4.00

ALPHAO	DZ	Q(PSF)	PB1	PB2	PB4	LHLS	RHLS	PCAV
14.551	-1.912	423.41800	-.33520	-.33130	-.31890	-.33400	-.32860	-.89370
14.559	1.350	423.78930	-.32860	-.32350	-.31320	-.32790	-.32150	-.88930
14.571	5.795	423.03940	-.31820	-.31180	-.30460	-.31870	-.31180	-.87540
14.596	13.276	423.29300	-.32050	-.31250	-.30920	-.32180	-.31310	-.88300
14.628	27.980	424.78870	-.30270	-.29240	-.29330	-.30470	-.29430	-.86670
14.652	43.114	424.78560	-.33920	-.32930	-.33200	-.34070	-.33000	-.90060
14.658	57.869	423.91370	-.28720	-.27680	-.27960	-.28760	-.27880	-.84840
	GRADIENT	.00000	.00000	.00000	.00000	.00000	.00000	.00000

ORIGINAL PAGE IS
OF POOR QUALITY

CA20 747/1 01 S1 ORBITER DATA (OGN062) (20 JAN 75)

REFERENCE DATA

SREF =	2690.0000 SQ.FT.	XMRP =	1109.0000 IN.XO		
LREF =	474.8100 IN.	YMRP =	.0000 IN.YO		
BREF =	936.6800 IN.	ZMRP =	375.0000 IN.ZO		
SCALE =	.0300				

PARAMETRIC DATA

ALPHAC =	4.000	BETAC =	-5.000
ELV-IB =	.000	ELV-OB =	3.000
ELEVON =	5.000	MACH =	.600
BETAO =	.000	PHI =	.000
DX =	.000	DY =	.000

RUN NO. 649/ 0 RN/L = 3.23 GRADIENT INTERVAL = -1.00/ 4.00

ALPHAO	DZ	Q(PSF)	PB1	PB2	PB4	LHLS	RHLS	PCAV
10.509	-1.137	422.60510	-.32410	-.33450	-.33870	-.32360	-.32720	-.29830
10.494	1.805	422.22990	-.35290	-.35370	-.34840	-.35170	-.35550	-.33030
10.489	6.479	423.35090	-.31600	-.32610	-.31030	-.31380	-.31650	-.28950
10.492	14.163	422.48000	-.33300	-.34360	-.32790	-.33150	-.33600	-.30830
10.505	28.786	422.47860	-.31300	-.32410	-.29490	-.31200	-.31710	-.28760
10.508	37.359	422.21940	-.27910	-.29110	-.26930	-.28020	-.28410	-.25560
10.511	44.033	422.60060	-.30120	-.31250	-.28520	-.30160	-.30570	-.27760
	GRADIENT	.00000	.00000	.00000	.00000	.00000	.00000	.00000

RUN NO. 648/ 0 RN/L = 3.23 GRADIENT INTERVAL = -1.00/ 4.00

ALPHAO	DZ	Q(PSF)	PB1	PB2	PB4	LHLS	RHLS	PCAV
14.815	1.009	422.97570	-.35140	-.35980	-.34270	-.35110	-.35350	-.32720
14.791	4.326	423.47210	-.37280	-.38380	-.36490	-.37370	-.37500	-.34910
14.781	8.540	423.34770	-.35510	-.35560	-.34730	-.35470	-.35750	-.33030
14.774	15.930	423.22650	-.30200	-.31250	-.28490	-.30220	-.30570	-.27570
14.772	31.119	422.84920	-.35070	-.35650	-.34330	-.34920	-.35210	-.32590
14.770	46.180	422.47410	-.31530	-.32220	-.30800	-.31380	-.31780	-.28820
14.771	61.235	424.09370	-.32190	-.33000	-.28490	-.32050	-.32590	-.29700
	GRADIENT	.00000	.00000	.00000	.00000	.00000	.00000	.00000

CA20 747/1 01 S1 ORBITER DATA (DGN063) (20 JAN 75)

REFERENCE DATA

SREF =	2690.0000 SQ.FT.	XMRP =	1109.0000 IN.XO
LREF =	474.8100 IN.	YMRP =	.0000 IN.YO
BREF =	936.6800 IN.	ZMRP =	375.0000 IN.ZO
SCALE =	.0300		

PARAMETRIC DATA

ALPHAC =	4.000	BETAC =	-5.000
ELV-IB =	.000	ELV-OB =	3.000
ELEVON =	5.000	MACH =	.600
BETAO =	.000	PHI =	.000
DX =	10.000	DY =	.000

RUN NO. 687/ 0 RN/L = 3.29 GRADIENT INTERVAL = -1.00/ 4.00

ALPHAO	DZ	Q(PSF)	PB1	PB2	PB4	LHLS	RHLS	PCAV
10.405	-1.205	423.96510	-.33440	-.35780	-.31880	-.32480	-.33390	-.28060
10.394	1.344	424.84120	-.32850	-.34480	-.30400	-.31870	-.32590	-.27030
10.395	6.229	425.34320	-.31220	-.32480	-.28410	-.30220	-.30830	-.25300
10.414	13.845	425.46440	-.31590	-.32410	-.28470	-.30530	-.31030	-.25680
10.432	28.880	424.96710	-.31740	-.32150	-.28640	-.30770	-.31100	-.25990
10.441	43.758	423.46930	-.29230	-.29360	-.26300	-.28510	-.28610	-.23920
10.445	48.107	425.46440	-.32180	-.32350	-.28610	-.31500	-.31500	-.27190
	GRADIENT	.00000	.00000	.00000	.00000	.00000	.00000	.00000

RUN NO. 688/ 0 RN/L = 3.26 GRADIENT INTERVAL = -1.00/ 4.00

ALPHAO	DZ	Q(PSF)	PB1	PB2	PB4	LHLS	RHLS	PCAV
14.748	1.142	425.09770	-.33730	-.33640	-.31770	-.33400	-.32980	-.29570
14.723	4.240	424.35070	-.33980	-.33840	-.32000	-.33520	-.33050	-.29760
14.719	6.654	424.34770	-.32770	-.32860	-.30920	-.32360	-.32040	-.28760
14.719	16.242	423.97710	-.31960	-.32090	-.30120	-.31440	-.31170	-.27940
14.721	31.044	424.10060	-.33360	-.33120	-.31600	-.32850	-.32450	-.29380
14.728	46.344	423.97410	-.29670	-.29490	-.28070	-.29240	-.28740	-.25930
14.727	60.991	423.59890	-.28420	-.28330	-.26650	-.27960	-.27460	-.24610
	GRADIENT	.00000	.00000	.00000	.00000	.00000	.00000	.00000

CA20 747/1 01 S1 ORBITER DATA (DGN064) (20 JAN 75)

REFERENCE DATA

SREF =	2690.0000 SQ.FT.	XMRP =	1109.0000 IN.XO		
LREF =	474.8100 IN.	YMRP =	.0000 IN.YO		
BREF =	936.6800 IN.	ZMRP =	375.0000 IN.ZO		
SCALE =	.0300				

PARAMETRIC DATA

ALPHAC =	4.000	BETAC =	-5.000
ELV-IB =	.000	ELV-OB =	3.000
ELEVON =	5.000	MACH =	.600
BETAO =	.000	PHI =	.000
DX =	20.000	DY =	.000

RUN NO. 670/ 0 RN/L = 3.30 GRADIENT INTERVAL = -1.00/ 4.00

ALPHAO	DZ	Q(PSF)	PB1	PB2	PB4	LHLS	RHLS	PCAV
10.318	3.700	424.22790	-.27540	-.28070	-.27450	-.28340	-.27410	-.25500
10.322	6.553	423.85390	-.30640	-.31510	-.30010	-.30960	-.30440	-.27950
10.343	11.191	425.22890	-.27610	-.28530	-.26650	-.27540	-.27270	-.24430
10.354	18.631	424.10980	-.28870	-.29760	-.27900	-.28700	-.28480	-.25560
10.379	33.918	425.22730	-.27170	-.27880	-.26310	-.27050	-.26730	-.23810
10.388	48.230	424.35380	-.26880	-.27430	-.25850	-.26560	-.26330	-.23370
	GRADIENT	.00000	.00000	.00000	.00000	.00000	.00000	.00000

RUN NO. 671/ 0 RN/L = 3.30 GRADIENT INTERVAL = -1.00/ 4.00

ALPHAO	DZ	Q(PSF)	PB1	PB2	PB4	LHLS	RHLS	PCAV
14.501	7.815	424.35700	-.28540	-.29500	-.27670	-.28700	-.28350	-.25560
14.504	11.048	424.48140	-.28060	-.28530	-.26710	-.27790	-.27410	-.24620
14.508	15.518	424.60570	-.28500	-.28850	-.27050	-.28090	-.27740	-.25000
14.516	22.987	425.22570	-.27390	-.27620	-.25970	-.26930	-.26600	-.23810
14.524	38.017	424.10820	-.29390	-.29500	-.28190	-.29010	-.28620	-.25880
14.529	52.576	425.10140	-.28350	-.28460	-.26930	-.27850	-.27540	-.24690
14.527	68.431	424.47820	-.28210	-.28270	-.26820	-.27660	-.27410	-.24580
	GRADIENT	.00000	.00000	.00000	.00000	.00000	.00000	.00000

CA20 747/1 01 S1 ORBITER DATA (DGN065) (20 JAN 75)

REFERENCE DATA

SREF = 2690.0000 SQ.FT.	XMRP = 1109.0000 IN.XO		
LREF = 474.8100 IN.	YMRP = .0000 IN.YO		
BREF = 936.6900 IN.	ZMRP = 375.0000 IN.ZO		
SCALE = .0300			

PARAMETRIC DATA

ALPHAC =	8.000	BETAC =	-5.000
ELV-IB =	.000	ELV-OB =	3.000
ELEVON =	5.000	MACH =	.600
BETAO =	.000	PHI =	.000
DX =	.000	DY =	.000

RUN NO. 650/ 0 RN/L = 3.23 GRADIENT INTERVAL = -1.00/ 4.00

ALPHAO	DZ	Q(PSF)	PB1	PB2	PB4	LHLS	RHLS	PCAV
10.285	-2.880	422.22090	-.37430	-.38570	-.35070	-.37490	-.37840	-.35420
10.303	.275	422.21940	-.37140	-.38250	-.37860	-.37180	-.37500	-.35840
10.329	4.787	422.21640	-.36250	-.37530	-.37460	-.36330	-.36690	-.34220
10.366	12.206	422.58860	-.35810	-.36890	-.33020	-.35780	-.36150	-.33720
10.440	27.766	422.96360	-.32120	-.33060	-.32620	-.32050	-.32520	-.29760
10.469	42.705	423.08800	-.31670	-.32410	-.30970	-.31630	-.32050	-.29330
10.475	47.740	422.46360	-.33080	-.33640	-.32390	-.33150	-.33460	-.30960
	GRADIENT	.00000	.00000	.00000	.00000	.00000	.00000	.00000

RUN NO. 651/ 0 RN/L = 3.22 GRADIENT INTERVAL = -1.00/ 4.00

ALPHAO	DZ	Q(PSF)	PB1	PB2	PB4	LHLS	RHLS	PCAV
14.666	-.982	423.46260	-.37580	-.38640	-.39230	-.37790	-.37980	-.35980
14.656	2.094	423.71290	-.37280	-.38440	-.37750	-.37550	-.37570	-.35600
14.666	6.577	424.08900	-.36620	-.37730	-.35180	-.36940	-.36960	-.35040
14.686	14.365	423.83560	-.35070	-.36110	-.35180	-.35290	-.35350	-.33600
14.713	29.395	423.21390	-.34770	-.35720	-.35010	-.34980	-.35140	-.33220
14.725	44.077	422.59010	-.33300	-.34230	-.33020	-.33640	-.33800	-.31900
	GRADIENT	.08138	.00098	.00065	.00481	.00078	.00107	.00124

ORIGINAL PAGE IS
OF POOR QUALITY

CA20 747/1 01 SI ORBITER DATA (DGN066) (20 JAN 75)

REFERENCE DATA

SREF =	2690.0000 SQ.FT.	XMRP =	1109.0000 IN.XO
LREF =	474.8100 IN.	YMRP =	.0000 IN.YO
BREF =	936.6800 IN.	ZMRP =	375.0000 IN.ZO
SCALE =	.0300		

PARAMETRIC DATA

ALPHAC =	8.000	BETAC =	-5.000
ELV-IB =	.000	ELV-OB =	3.000
ELEVON =	5.000	MACH =	.600
BETAO =	.000	PHI =	.000
DX =	10.000	DY =	.000

RUN NO. 690/ 0 RN/L = 3.24 GRADIENT INTERVAL = -1.00/ 4.00

ALPHAO	DZ	Q(PSF)	PB1	PB2	PB4	LHLS	RHLS	PCAV
10.206	-2.705	423.98010	-.33990	-.33840	-.33650	-.33880	-.33120	-.31520
10.219	.329	425.35110	-.34690	-.34680	-.34390	-.34740	-.33860	-.32460
10.243	4.772	424.73260	-.34620	-.34610	-.34450	-.34620	-.33860	-.32270
10.288	12.369	424.73100	-.31440	-.31500	-.31260	-.31380	-.30760	-.29010
10.356	27.344	424.60500	-.31220	-.31180	-.31090	-.31200	-.30560	-.28820
10.397	42.540	424.10660	-.31070	-.30790	-.31030	-.31080	-.30360	-.28760
10.407	48.511	424.72780	-.32400	-.32350	-.32400	-.32420	-.31780	-.30140
	GRADIENT	.00000	.00000	.00000	.00000	.00000	.00000	.00000

RUN NO. 689/ 0 RN/L = 3.25 GRADIENT INTERVAL = -1.00/ 4.00

ALPHAO	DZ	Q(PSF)	PB1	PB2	PB4	LHLS	RHLS	PCAV
14.592	-.448	424.22710	-.34320	-.34100	-.33360	-.34250	-.33460	-.31270
14.594	2.908	424.85220	-.33880	-.33770	-.33020	-.33820	-.33050	-.30760
14.610	7.309	424.97500	-.32920	-.32860	-.32050	-.32910	-.32180	-.29890
14.635	14.529	424.72630	-.32260	-.32150	-.31310	-.32110	-.31500	-.29260
14.677	29.655	424.47570	-.32480	-.32150	-.31540	-.32240	-.31570	-.29510
14.699	44.920	424.35220	-.32550	-.32220	-.31690	-.32420	-.31700	-.29700
14.711	59.693	425.34480	-.32180	-.31890	-.31370	-.31870	-.31300	-.29320
	GRADIENT	.18627	.00131	.00098	.00101	.00128	.00122	.00152

CA20 747/1 01 S1 ORBITER DATA (DGH067) (20 JAN 75)

REFERENCE DATA

SREF =	2690.0000 SQ.FT.	XMRP =	1109.0000 IN.XO
LREF =	474.8100 IN.	YMRP =	.0000 IN.YO
BREF =	936.6800 IN.	ZMRP =	375.0000 IN.ZO
SCALE =	.0300		

PARAMETRIC DATA

ALPHAC =	8.000	BETAC =	-5.000
ELV-IB =	.000	ELV-OB =	3.000
ELEVON =	5.000	MACH =	.600
BETAO =	.000	PHI =	.000
DX =	20.000	DY =	.000

RUN NO. 673/ 0 RN/L = 3.28 GRADIENT INTERVAL = -1.00/ 4.00

ALPHAO	DZ	Q(PSF)	PB1	PB2	PB4	LHLS	RHLS	PCAV
10.219	-1.170	424.60260	-.30490	-.30470	-.30180	-.30660	-.29970	-.28080
10.227	1.973	423.48170	-.29460	-.29310	-.29100	-.29500	-.28890	-.26950
10.253	6.418	424.73000	-.29680	-.29630	-.29380	-.29680	-.29090	-.27140
10.285	13.777	423.85390	-.28280	-.28330	-.27900	-.28340	-.27680	-.25820
10.356	28.938	425.09830	-.29680	-.29570	-.29610	-.29680	-.29020	-.27200
10.397	44.164	423.48020	-.26210	-.25970	-.26250	-.26380	-.25520	-.23930
10.406	49.620	423.65840	-.26430	-.26130	-.26420	-.26630	-.25720	-.24120
	GRADIENT	.00000	.00000	.00000	.00000	.00000	.00000	.00000

RUN NO. 672/ 0 RN/L = 3.28 GRADIENT INTERVAL = -1.00/ 4.00

ALPHAO	DZ	Q(PSF)	PB1	PB2	PB4	LHLS	RHLS	PCAV
14.374	1.687	423.22550	-.31820	-.31970	-.31200	-.31940	-.31310	-.28890
14.386	5.002	423.72280	-.31750	-.31840	-.31090	-.31760	-.31180	-.28770
14.403	9.317	424.97400	-.28570	-.28530	-.27790	-.28580	-.27950	-.25560
14.432	16.929	424.47510	-.28280	-.28200	-.27330	-.28150	-.27540	-.25190
14.474	32.128	424.35070	-.28870	-.28660	-.28190	-.28760	-.28150	-.25820
14.499	46.955	424.34910	-.29610	-.29180	-.28870	-.29370	-.28750	-.26510
14.362	60.738	424.97400	-.28720	-.28330	-.27850	-.28400	-.27810	-.25630
	GRADIENT	.00000	.00000	.00000	.00000	.00000	.00000	.00000

CA20 747/1 01 SI ORBITER DATA (DGN068) (20 JAN 75)

REFERENCE DATA

SREF =	2690.0000 SQ.FT.	XMRP =	1109.0000 IN.XO		
LREF =	474.8100 IN.	YMRP =	.0000 IN.YO		
BREF =	936.6800 IN.	ZMRP =	375.0000 IN.ZO		
SCALE =	.0300				

PARAMETRIC DATA

ALPHAC =	4.000	BETAC =	-5.000
ELV-IB =	.000	ELV-OB =	3.000
ELEVON =	5.000	MACH =	.600
BETAO =	.000	PHI =	.000
DX =	.000	DY =	10.000

RUN NO. 776/ 0 RN/L = 3.29 GRADIENT INTERVAL = -1.00/ 4.00

ALPHAO	DZ	Q(PSF)	PB1	PB2	PB4	LHLS	RHLS	PCAV
10.526	-1.143	423.99630	-.35440	-.35600	-.33480	-.34810	-.34610	.81890
10.516	1.191	422.88710	-.33440	-.33460	-.31320	-.32730	-.32590	.82460
10.514	5.570	423.38240	-.33740	-.33780	-.31600	-.32970	-.32930	.82140
10.520	13.285	423.38080	-.32550	-.32740	-.30290	-.31810	-.31780	.84720
10.530	28.364	423.13110	-.30860	-.31060	-.28640	-.30100	-.30100	.86160
10.538	43.310	423.62640	-.30420	-.30730	-.28130	-.29680	-.29760	.89930
10.536	47.055	423.99530	-.30490	-.30860	-.28130	-.29680	-.29760	.89550
	GRADIENT	.00000	.00000	.00000	.00000	.00000	.00000	.00000

RUN NO. 782/ 0 RN/L = 3.21 GRADIENT INTERVAL = -1.00/ 4.00

ALPHAO	DZ	Q(PSF)	PB1	PB2	PB4	LHLS	RHLS	PCAV
14.852	1.732	423.40070	-.39870	-.38840	-.40710	-.40120	-.39250	1.20200
14.836	4.566	423.40220	-.39790	-.38900	-.40830	-.40240	-.39250	1.20010
14.828	8.860	422.90350	-.36840	-.35790	-.37810	-.37250	-.36220	1.19320
14.824	16.510	423.27420	-.35510	-.34820	-.36790	-.36090	-.35010	1.18440
14.826	31.452	423.02410	-.32780	-.31900	-.33880	-.33280	-.32250	1.22340
14.825	46.606	423.39320	-.31890	-.31120	-.32910	-.32240	-.31380	1.24850
14.822	61.410	423.77440	-.30340	-.29440	-.31260	-.29980	-.29900	1.29430
	GRADIENT	.00000	.00000	.00000	.00000	.00000	.00000	.00000

CA20 747/1 01 SI ORBITER DATA (DGN0691) (20 JAN 75)

REFERENCE DATA

SREF =	2690.0000 SQ.FT.	XMRP =	1109.0000 IN.XO		
LREF =	474.8100 IN.	YMRP =	.0000 IN.YO		
BREF =	936.6800 IN.	ZMRP =	375.0000 IN.ZO		
SCALE =	.0300				

PARAMETRIC DATA

ALPHAC =	4.000	BETAC =	-5.000
ELV-IB =	.000	ELV-OB =	3.000
ELEVON =	5.000	MACH =	.600
BETAO =	.000	PHI =	.000
DX =	10.000	DY =	10.000

RUN NO. 739/ 0 RN/L = 3.24 GRADIENT INTERVAL = -1.00/ 4.00

ALPHAO	DZ	Q(PSF)	PB1	PB2	PB4	LHLS	RHLS	PCAV
10.422	-2.280	424.92560	-.35440	-.34560	-.35360	-.35600	-.34540	-.90370
10.405	1.098	424.55590	-.35960	-.35140	-.35930	-.36020	-.35020	-.90430
10.409	5.675	424.05590	-.32930	-.32350	-.33080	-.33150	-.32120	-.87980
10.422	13.013	424.30560	-.33230	-.32610	-.33370	-.33400	-.32320	-.88550
10.450	28.103	424.30400	-.30790	-.29950	-.31030	-.31080	-.29970	-.87920
10.460	43.255	424.80130	-.27690	-.27030	-.27950	-.28090	-.26940	-.85720
10.461	46.967	423.69160	-.26360	-.25800	-.26550	-.26740	-.25590	-.84470
	GRADIENT	.00000	.00000	.00000	.00000	.00000	.00000	.00000

RUN NO. 746/ 0 RN/L = 3.23 GRADIENT INTERVAL = -1.00/ 4.00

ALPHAO	DZ	Q(PSF)	PB1	PB2	PB4	LHLS	RHLS	PCAV
14.699	.081	424.53700	-.27980	-.27030	-.28380	-.28760	-.27410	-.69460
14.686	3.398	424.78560	-.27540	-.26580	-.28870	-.28270	-.26940	-.69210
14.677	8.089	423.54160	-.29240	-.28140	-.30640	-.29980	-.28620	-.71150
14.677	15.482	424.66130	-.31090	-.30080	-.32570	-.31810	-.30500	-.73230
14.674	30.336	422.91630	-.30720	-.29820	-.32400	-.31500	-.30240	-.73230
14.676	45.437	423.66500	-.30490	-.29560	-.32280	-.31320	-.29970	-.73730
14.674	60.598	422.91480	-.26060	-.25090	-.27790	-.26500	-.25520	-.69770
	GRADIENT	.07495	.00133	.00136	.00154	.00148	.00142	.00075

ORIGINAL PAGE IS OF POOR QUALITY

CA20 747/1 01 S1 ORBITER DATA (DGN070) (20 JAN 75)

REFERENCE DATA

SREF =	2690.0000 SQ.FT.	XMRP =	1109.0000 IN.XO		
LREF =	474.8100 IN.	YMRP =	.0000 IN.YO		
BREF =	936.6800 IN.	ZMRP =	375.0000 IN.ZO		
SCALE =	.0300				

PARAMETRIC DATA

ALPHAC =	8.000	BETAC =	-5.000		
ELV-IB =	.000	ELV-OB =	3.000		
ELEVON =	5.000	MACH =	.600		
BETAO =	.000	PHI =	.000		
DX =	.000	DY =	10.000		

RUN NO. 779/ 0 RN/L = 3.26 GRADIENT INTERVAL = -1.00/ 4.00

ALPHAO	DZ	Q(PSF)	PB1	PB2	PB4	LHLS	RHLS	PCAV
10.342	-2.449	423.90500	-.38460	-.37610	-.37470	-.38040	-.37500	.86780
10.363	.833	424.02940	-.40240	-.39420	-.39180	-.39930	-.39250	.84090
10.393	5.429	424.64940	-.36690	-.35860	-.35700	-.36330	-.35690	.84840
10.426	12.730	424.40080	-.36620	-.35920	-.35820	-.36330	-.35750	.82650
10.478	27.999	424.15210	-.35950	-.35470	-.35190	-.35660	-.35150	.79950
10.511	42.823	424.26850	-.32480	-.32030	-.31830	-.3218	-.31780	.82710
10.514	46.832	423.65160	-.31230	-.30730	-.30350	-.3084	-.30370	.86670
	GRADIENT	.00000	.00000	.00000	.00000	.00000	.00000	.00000

RUN NO. 786/ 0 RN/L = 3.19 GRADIENT INTERVAL = -1.00/ 4.00

ALPHAO	DZ	Q(PSF)	PB1	PB2	PB4	LHLS	RHLS	PCAV
14.727	.234	422.65490	-.41570	-.40590	-.43620	-.42380	-.41140	1.13540
14.734	3.279	424.27330	-.42080	-.41240	-.44190	-.43050	-.41750	1.12480
14.749	7.626	424.64460	-.35510	-.34560	-.37920	-.36510	-.35150	1.17190
14.763	15.024	423.89870	-.35590	-.34560	-.37920	-.36580	-.35150	1.15930
14.794	30.355	424.51720	-.34330	-.33260	-.36780	-.35250	-.33800	1.17080
14.799	45.083	422.65040	-.32040	-.30930	-.34280	-.32780	-.31510	1.21830
14.813	60.285	424.14270	-.31080	-.29890	-.33200	-.31080	-.30640	1.25600
	GRADIENT	.53151	-.00167	-.00213	-.00187	-.00220	-.00200	-.00348

CA20 747/1 01 SI ORBITER DATA (DGN071) (20 JAN 75)

REFERENCE DATA

SREF =	2690.0000 SQ.FT.	XMRP =	1109.0000 IN.XO		
LREF =	474.8100 IN.	YMRP =	.0000 IN.YO		
BREF =	936.6800 IN.	ZMRP =	375.0000 IN.ZO		
SCALE =	.0300				

PARAMETRIC DATA

ALPHAC =	8.000	BETAC =	-5.000
ELV-IB =	.000	ELV-OB =	3.000
ELEVON =	5.000	MACH =	.600
BETAO =	.000	PHI =	.000
DX =	10.000	DY =	10.000

RUN NO. 740/ 0 RN/L = 3.25 GRADIENT INTERVAL = -1.00/ 4.00

ALPHAO	DZ	Q(PSF)	PB1	PB2	PB4	LHLS	RHLS	PCAV
10.224	-3.964	423.30200	-.34260	-.33390	-.34050	-.34370	-.33270	-.85850
10.249	-1.071	423.17990	-.32780	-.32090	-.32630	-.32910	-.31850	-.84220
10.273	3.575	423.17990	-.32120	-.31180	-.31890	-.32180	-.31040	-.83710
10.307	11.249	423.17840	-.31310	-.30470	-.31260	-.31500	-.30370	-.83340
10.375	26.103	423.67710	-.30490	-.29630	-.30580	-.30650	-.29490	-.84590
10.407	41.260	423.30350	-.30050	-.29300	-.30290	-.30410	-.29230	-.85280
10.427	47.378	423.80500	-.29680	-.29040	-.29900	-.30040	-.28890	-.85600
	GRADIENT	.00000	.00000	.00000	.00000	.00000	.00000	.00000

RUN NO. 741/ 0 RN/L = 3.24 GRADIENT INTERVAL = -1.00/ 4.00

ALPHAO	DZ	Q(PSF)	PB1	PB2	PB4	LHLS	RHLS	PCAV
14.548	-1.395	423.43300	-.38990	-.38510	-.38950	-.39380	-.38320	-.84780
14.553	1.311	424.55270	-.37800	-.37410	-.37750	-.38040	-.37170	-.83340
14.570	6.124	424.17660	-.35520	-.34940	-.35530	-.35780	-.34810	-.81830
14.599	13.813	423.42700	-.32410	-.31900	-.32630	-.32910	-.31720	-.79510
14.637	28.816	424.79500	-.32270	-.31700	-.32800	-.32850	-.31720	-.80130
14.658	43.625	424.54960	-.31680	-.30920	-.32290	-.32180	-.31040	-.80010
14.668	58.608	424.54960	-.27760	-.26780	-.28190	-.27780	-.27140	-.76240
	GRADIENT	.00000	.00000	.00000	.00000	.00000	.00000	.00000

CA20 747/1 01 SI ORBITER DATA (DGN072) (20 JAN 75)

REFERENCE DATA

SREF =	2690.0000 SQ.FT.	XMRP =	1109.0000 IN.XO		
LREF =	474.8100 IN.	YMRP =	.0000 IN.YO		
BREF =	936.6800 IN.	ZMRP =	375.0000 IN.ZO		
SCALE =	.0300				

PARAMETRIC DATA

ALPHAC =	4.000	BETAC =	5.000
ELV-IB =	.000	ELV-OB =	3.000
ELEVON =	5.000	MACH =	.600
BETAO =	.000	PHI =	.000
DX =	.000	DY =	10.000

RUN NO. 777/ 0 RN/L = 3.27 GRADIENT INTERVAL = -1.00/ 4.00

ALPHAO	DZ	Q(PSF)	PB1	PB2	PB4	LHLS	RHLS	PCAV
10.561	-1.260	423.62330	-.35660	-.35340	-.33600	-.34990	-.34740	.87860
10.547	1.334	424.12060	-.33810	-.33390	-.31660	-.33220	-.32930	.89430
10.536	5.878	423.50050	-.33520	-.32940	-.31200	-.32780	-.32520	.88740
10.536	13.042	423.75080	-.32560	-.32030	-.30240	-.31870	-.31580	.87100
10.541	28.032	423.75080	-.32410	-.32090	-.30120	-.31750	-.31510	.86790
10.562	43.587	423.39240	-.30710	-.30410	-.28240	-.29860	-.29760	.90680
10.545	47.071	423.99950	-.31300	-.31060	-.28930	-.30530	-.30370	.92690
	GRADIENT	.00000	.00000	.00000	.00000	.00000	.00000	.00000

RUN NO. 783/ 0 RN/L = 3.21 GRADIENT INTERVAL = -1.00/ 4.00

ALPHAO	DZ	Q(PSF)	PB1	PB2	PB4	LHLS	RHLS	PCAV
14.885	1.660	423.77590	-.33740	-.32480	-.35020	-.34070	-.33190	1.25730
14.865	4.767	422.77550	-.31820	-.30600	-.33200	-.32240	-.31310	1.25980
14.851	8.930	423.15220	-.32190	-.31060	-.33600	-.32730	-.31780	1.22960
14.843	16.495	422.90050	-.30860	-.29700	-.32340	-.31450	-.30300	1.21460
14.833	31.538	424.26860	-.31160	-.30150	-.32800	-.31870	-.30700	1.22520
14.829	46.682	424.02460	-.29970	-.29050	-.31380	-.30590	-.29490	1.24530
14.822	61.660	423.39920	-.28720	-.27750	-.29780	-.28640	-.28210	1.29560
	GRADIENT	.00000	.00000	.00000	.00000	.00000	.00000	.00000

CA20 747/1 01 SI ORBITER DATA (OGN073) (30 JUL 75)

REFERENCE DATA

SREF =	2690.0000 SQ.FT.	XMRP =	1109.0000 IN.XO
LREF =	474.8100 IN.	YMRP =	.0000 IN.YO
BREF =	936.6800 IN.	ZMRP =	375.0000 IN.ZO
SCALE =	.0300		

PARAMETRIC DATA

ALPHAC =	4.000	BETAC =	5.000
ELV-1B =	.000	ELV-0B =	3.000
ELEVON =	5.000	MACH =	.600
BETAO =	.000	PHI =	.000
DX =	10.000	DY =	10.000

ORIGINAL PAGE IS
OF POOR QUALITY

RUN NO. 743/ 0 RN/L = 3.24 GRADIENT INTERVAL = -1.00/ 4.00

ALPHAO	DZ	Q(PSF)	PB1	PB2	PB4	LHLS	RHLS	PCAV
10.456	-2.278	424.05690	-.32560	-.32030	-.33080	-.32970	-.31920	-.81960
10.441	.974	423.80810	-.32190	-.31440	-.32630	-.32480	-.31380	-.81580
10.437	5.632	423.93100	-.30050	-.29110	-.30350	-.30160	-.29090	-.79690
10.440	12.947	424.30090	-.30130	-.29170	-.30460	-.30340	-.29160	-.80450
10.454	28.272	423.80500	-.29170	-.28330	-.29550	-.29370	-.28210	-.79190
10.462	43.215	423.80190	-.29310	-.28530	-.30010	-.29730	-.28550	-.80070
10.464	46.552	424.79660	-.29310	-.28660	-.29950	-.29730	-.28550	-.80070
	GRADIENT	.00000	.00000	.00000	.00000	.00000	.00000	.00000

RUN NO. 746/ 0 RN/L = 3.23 GRADIENT INTERVAL = -1.00/ 4.00

ALPHAO	DZ	Q(PSF)	PB1	PB2	PB4	LHLS	RHLS	PCAV
14.699	.081	424.53700	-.27980	-.27030	-.29380	-.28760	-.27410	-.69460
14.686	3.398	424.78560	-.27540	-.26590	-.28870	-.28270	-.26940	-.69210
14.677	8.089	423.54160	-.29240	-.28140	-.30640	-.29980	-.28620	-.71150
14.677	15.482	424.66130	-.31090	-.30080	-.32570	-.31810	-.30500	-.73230
14.674	30.336	422.91630	-.30720	-.29820	-.32400	-.31500	-.30240	-.73230
14.676	45.437	423.66500	-.30490	-.29560	-.32290	-.31320	-.29970	-.73730
14.674	60.598	422.91480	-.26060	-.25090	-.27790	-.26500	-.25520	-.69770
	GRADIENT	.07485	.00133	.00136	.00154	.00148	.00142	.00075

CA20 747/1 01 S1 ORBITER DATA (DG2074) (20 JAN 75)

REFERENCE DATA

SREF =	2690.0000 SQ.FT.	XMRP =	1109.0000 IN.XO
LREF =	474.8100 IN.	YMRP =	.0000 IN.YO
BREF =	936.6800 IN.	ZMRP =	375.0000 IN.ZO
SCALE =	.0300		

PARAMETRIC DATA

ALPHAC =	8.000	BETAC =	5.000
ELV-IB =	.000	ELV-OB =	3.000
ELEVON =	5.000	MACH =	.600
BETAO =	.000	PHI =	.000
DX =	.000	DY =	10.000

RUN NO. 778/ 0 RN/L = 3.27 GRADIENT INTERVAL = -1.00/ 4.00

ALPHAO	DZ	Q(PSF)	PB1	PB2	PB4	LHLS	RHLS	PCAV
10.366	-2.569	423.51310	-.37430	-.36830	-.35820	-.36880	-.36560	.89740
10.382	.494	423.52090	-.38320	-.37670	-.36790	-.37660	-.37500	.88230
10.404	5.444	422.77250	-.38240	-.37480	-.36790	-.37740	-.37300	.83710
10.446	12.879	424.51720	-.37280	-.36500	-.35870	-.36760	-.36360	.84220
10.484	27.855	424.39130	-.34770	-.34360	-.33480	-.34380	-.33940	.82270
10.507	42.785	424.64310	-.34990	-.34550	-.33710	-.34500	-.34140	.81080
10.510	46.810	423.27570	-.33440	-.33070	-.32120	-.32850	-.32590	.83900
	GRADIENT	.00000	.00000	.00000	.00000	.00000	.00000	.00000

RUN NO. 785/ 0 RN/L = 3.20 GRADIENT INTERVAL = -1.00/ 4.00

ALPHAO	DZ	Q(PSF)	PB1	PB2	PB4	LHLS	RHLS	PCAV
14.769	.421	423.78690	-.35510	-.34690	-.37700	-.36450	-.35210	1.18950
14.783	3.277	424.03250	-.38100	-.37220	-.40320	-.38960	-.37710	1.14990
14.785	7.611	424.15580	-.35140	-.34230	-.37350	-.36050	-.34740	1.17440
14.776	14.897	423.28170	-.34030	-.33000	-.36220	-.34930	-.33600	1.16620
14.801	30.065	424.02780	-.34850	-.33910	-.37300	-.35900	-.34410	1.16940
14.812	45.241	424.27020	-.34480	-.33260	-.36670	-.35230	-.33870	1.19450
14.809	60.161	424.14740	-.32710	-.31510	-.34790	-.32910	-.32250	1.23560
	GRADIENT	.08600	-.00907	-.00886	-.00917	-.00879	-.00875	-.01387

CA20 747/1 01 S1 ORBITER DATA (DGN075) (20 JAN 75)

REFERENCE DATA

SREF =	2690.0000 SQ.FT.	XMRP =	1109.0000 IN.XO		
LREF =	474.8100 IN.	YMRP =	.0000 IN.YO		
BREF =	936.6900 IN.	ZMRP =	375.0000 IN.ZO		
SCALE =	.0300				

PARAMETRIC DATA

ALPHAC =	8.000	BETAC =	2.000
ELV-IB =	.000	ELV-OB =	3.000
ELEVON =	5.000	MACH =	.600
BETAO =	.000	PHI =	.000
DX =	10.000	DY =	10.000

RUN NO. 744/ 0 RN/L = 3.24 GRADIENT INTERVAL = -1.00/ 4.00

ALPHAO	DZ	Q(PSF)	PB1	PB2	PB4	LHLS	RHLS	PCAV
10.291	-4.295	423.67680	-.32930	-.32290	-.33430	-.33210	-.32260	-.82020
10.284	-1.016	423.92780	-.32050	-.31380	-.32630	-.32360	-.31380	-.81830
10.296	3.234	424.92410	-.32640	-.31900	-.33200	-.32910	-.31850	-.82770
10.325	10.653	424.17970	-.32190	-.31310	-.32690	-.32420	-.31310	-.82270
10.391	26.076	423.30200	-.30200	-.29170	-.30750	-.30410	-.29290	-.81700
10.421	40.921	424.04910	-.30790	-.29820	-.31490	-.31140	-.29970	-.82020
10.429	47.391	423.80030	-.30270	-.29370	-.31030	-.30710	-.29490	-.82270
	GRADIENT	.00000	.00000	.00000	.00000	.00000	.00000	.00000

RUN NO. 745/ 0 RN/L = 3.23 GRADIENT INTERVAL = -1.00/ 4.00

ALPHAO	DZ	Q(PSF)	PB1	PB2	PB4	LHLS	RHLS	PCAV
14.583	-1.882	423.92310	-.31970	-.31180	-.32630	-.32420	-.31310	-.74860
14.579	1.393	423.29750	-.30720	-.29890	-.31390	-.31140	-.30100	-.73040
14.585	5.736	424.29460	-.30570	-.29630	-.31320	-.31020	-.29900	-.73290
14.601	12.991	424.29460	-.30790	-.29760	-.31660	-.31260	-.30030	-.73670
14.629	28.063	423.29600	-.29610	-.28330	-.30690	-.30160	-.28750	-.72660
14.652	42.937	424.53380	-.29760	-.28460	-.31030	-.30410	-.28960	-.73350
14.659	57.817	423.29150	-.32410	-.31250	-.33880	-.32970	-.31780	-.75930
	GRADIENT	.00000	.00000	.00000	.00000	.00000	.00000	.00000

CA20 747/1 01 S1 ORBITER DATA (DGN076) (20 JAN 75)

REFERENCE DATA

SREF =	2690.0000 SQ.FT.	XMRP =	1109.0000 IN.XO		
LREF =	474.8100 IN.	YMRP =	.0000 IN.YO		
BREF =	936.6800 IN.	ZMRP =	375.0000 IN.ZO		
SCALE =	.0300				

PARAMETRIC DATA

ALPHAC =	4.000	BETAC =	-5.000
ELV-IB =	.000	ELV-OB =	3.000
ELEVON =	5.000	MACH =	.600
BETAO =	.000	PHI =	7.500
DX =	.000	DY =	.000

RUN NO. 700/ 0 RN/L = 3.24 GRADIENT INTERVAL = -1.00/ 4.00

ALPHAO	DZ	Q(PSF)	PB1	PB2	PB4	LHLS	RHLS	PCAV
10.498	-1.277	423.60250	-.36170	-.36830	-.34270	-.35960	-.35750	-.31400
10.489	2.021	423.85330	-.33070	-.33450	-.31080	-.32790	-.32580	-.28010
10.492	6.310	424.72360	-.32700	-.33080	-.30740	-.32420	-.32250	-.27750
10.500	13.726	424.10050	-.31670	-.32020	-.29650	-.31320	-.31240	-.26810
10.510	28.683	424.58990	-.31450	-.31830	-.29660	-.31320	-.31100	-.27000
10.516	43.777	424.21850	-.29820	-.29880	-.28010	-.29550	-.29350	-.25430
10.513	47.275	422.64480	-.27310	-.27490	-.25390	-.27110	-.26800	-.22920
	GRADIENT	.00000	.00000	.00000	.00000	.00000	.00000	.00000

RUN NO. 699/ 0 RN/L = 3.25 GRADIENT INTERVAL = -1.00/ 4.00

ALPHAO	DZ	Q(PSF)	PB1	PB2	PB4	LHLS	RHLS	PCAV
14.757	1.908	422.72130	-.34110	-.35330	-.32560	-.33950	-.34130	-.29140
14.746	4.533	423.47450	-.32330	-.33450	-.30690	-.32360	-.32450	-.27380
14.741	9.089	423.09650	-.35210	-.36170	-.33530	-.35230	-.35140	-.30140
14.736	16.717	423.59950	-.31820	-.32930	-.30230	-.31990	-.31910	-.26880
14.734	31.718	423.97140	-.31520	-.32410	-.29890	-.31630	-.31510	-.26560
14.738	46.644	422.97290	-.31450	-.32350	-.29710	-.31570	-.31370	-.26500
14.739	61.610	424.22480	-.28600	-.29110	-.26580	-.28450	-.28340	-.23480
	GRADIENT	.00000	.00000	.00000	.00000	.00000	.00000	.00000

CA20 747/1 01 S1 ORBITER DATA (DGN077) (20 JAN 75)

REFERENCE DATA

SREF =	2690.0000 SQ.FT.	XMRP =	1109.0000 IN.XO		
LREF =	474.8100 IN.	YMRP =	.0000 IN.YO		
BREF =	936.6800 IN.	ZMRP =	375.0000 IN.ZO		
SCALE =	.0300				

PARAMETRIC DATA

ALPHAC =	4.000	BETAC =	-5.000
ELV-IB =	.000	ELV-OB =	3.000
ELEVON =	5.000	MACH =	.600
BETAO =	.000	PHI =	7.500
DX =	10.000	DY =	.000

RUN NO. 679/ 0 RN/L = 3.29 GRADIENT INTERVAL = -1.00/ 4.00

ALPHAO	DZ	Q(PSF)	PB1	PB2	PB4	LHLS	RHLS	PCAV
10.372	-2.105	424.84510	-.33750	-.35020	-.32970	-.33590	-.33530	-.30150
10.367	1.060	424.46880	-.32340	-.33720	-.31660	-.32240	-.32250	-.28640
10.367	5.691	425.33780	-.31380	-.32750	-.30580	-.31140	-.31240	-.27510
10.389	13.253	424.83720	-.29980	-.31250	-.29100	-.29740	-.29890	-.26130
10.411	28.268	424.71290	-.33230	-.34370	-.32120	-.32790	-.32990	-.29080
10.422	43.330	424.46250	-.30420	-.31380	-.29210	-.29920	-.30100	-.26190
10.423	48.502	423.96700	-.29930	-.30740	-.28470	-.29310	-.29420	-.25500
	GRADIENT	.00000	.00000	.00000	.00000	.00000	.00000	.00000

RUN NO. 680/ 0 RN/L = 3.28 GRADIENT INTERVAL = -1.00/ 4.00

ALPHAO	DZ	Q(PSF)	PB1	PB2	PB4	LHLS	RHLS	PCAV
14.684	.874	424.96320	-.37440	-.38190	-.35980	-.37250	-.37230	-.33480
14.667	4.232	424.71290	-.31240	-.32100	-.29730	-.31080	-.31110	-.27010
14.662	8.405	425.08600	-.34650	-.35530	-.33200	-.34630	-.34610	-.30400
14.663	16.057	425.58490	-.31830	-.32690	-.30130	-.31630	-.31650	-.27450
14.668	30.959	424.33770	-.31160	-.31770	-.29560	-.30960	-.30900	-.26820
14.672	45.936	423.84040	-.31240	-.31840	-.29610	-.31080	-.30970	-.26980
14.683	61.178	423.58720	-.30570	-.31080	-.28760	-.30230	-.30160	-.26070
	GRADIENT	.00000	.00000	.00000	.00000	.00000	.00000	.00000

ORIGINAL PAGE IS OF POOR QUALITY

CA20 747/1 01 SI ORBITER DATA (DGN078) (20 JAN 75)

REFERENCE DATA

SREF =	2690.0000 SQ.FT.	XMRP =	1109.0000 IN.XO
LREF =	474.8100 IN.	YMRP =	.0000 IN.YO
BREF =	936.6900 IN.	ZMRP =	375.0000 IN.ZO
SCALE =	.0300		

PARAMETRIC DATA

ALPHAC =	8.000	BETAC =	-5.000
ELV-IB =	.000	ELV-OB =	3.000
ELEVON =	5.000	MACH =	.600
BETAO =	.000	PHI =	7.500
DX =	.000	DY =	.000

RUN NO. 701/ 0 RN/L = 3.22 GRADIENT INTERVAL = -1.00/ 4.00

ALPHAO	DZ	Q(PSF)	PB1	PB2	PB4	LHLS	RHLS	PCAV
10.301	-1.522	423.46700	-.38090	-.38160	-.36650	-.38160	-.37630	-.34350
10.323	1.720	423.59050	-.35320	-.36370	-.34950	-.36390	-.35820	-.32590
10.358	6.033	424.33020	-.35800	-.35720	-.34380	-.35780	-.35280	-.32020
10.398	15.288	423.46100	-.34030	-.33970	-.32730	-.33020	-.33390	-.30140
10.452	28.550	424.57880	-.32480	-.32280	-.31310	-.32480	-.31910	-.29010
10.485	43.635	423.58270	-.30340	-.30140	-.29430	-.30470	-.29890	-.27130
10.490	47.136	424.20120	-.31300	-.31120	-.30490	-.31500	-.30900	-.28190
	GRADIENT	.00000	.00000	.00000	.00000	.00000	.00000	.00000

RUN NO. 698/ 0 RN/L = 3.31 GRADIENT INTERVAL = -1.00/ 4.00

ALPHAO	DZ	Q(PSF)	PB1	PB2	PB4	LHLS	RHLS	PCAV
14.639	1.551	424.71880	-.36470	-.40450	-.35860	-.36330	-.37030	-.32970
14.646	4.440	423.22750	-.36320	-.39740	-.35920	-.36270	-.36960	-.32720
14.662	9.007	424.47180	-.35800	-.39090	-.35350	-.35780	-.36420	-.32210
14.679	16.752	423.85020	-.33290	-.36040	-.32620	-.33280	-.33900	-.29200
14.701	31.550	424.22010	-.32700	-.34880	-.31820	-.32790	-.33060	-.28380
14.713	46.466	423.71800	-.30540	-.32740	-.29860	-.30770	-.30970	-.26250
14.722	61.470	424.21690	-.31300	-.33000	-.30230	-.31140	-.31580	-.26810
	GRADIENT	.00000	.00000	.00000	.00000	.00000	.00000	.00000

CA20 747/1 01 SI ORBITER DATA (DGN079) (20 JAN 75)

REFERENCE DATA

SREF = 2690.0800 SQ.FT. XMRP = 1109.0000 IN.XO
LREF = 474.8100 IN. YMRP = .0000 IN.YO
BREF = 936.6800 IN. ZMRP = 375.0000 IN.ZO
SCALE = .0300

PARAMETRIC DATA

ALPHAC = 8.000 BETAC = -5.000
ELV-IB = .000 ELV-OB = 3.000
ELEVON = 5.000 MACH = .600
BETAO = .000 PHI = 7.500
DX = 10.000 DY = .000

RUN NO. 682/ 0 RN/L = 3.27 GRADIENT INTERVAL = -1.00/ 4.00

ALPHAO	DZ	Q(PSF)	PB1	PB2	PB4	LHLS	RHLS	PCAV
10.182	-3.146	424.47480	-.31610	-.31770	-.30010	-.31210	-.30900	-.27640
10.201	-.191	425.21660	-.36630	-.36640	-.35080	-.36210	-.35820	-.32850
10.223	4.382	424.84670	-.31830	-.32030	-.30350	-.31450	-.31170	-.27830
10.263	11.935	424.97110	-.30720	-.30800	-.29330	-.30290	-.30030	-.26760
10.337	26.849	423.84640	-.32340	-.32420	-.30810	-.31760	-.31580	-.28330
10.377	42.008	424.84040	-.30500	-.30540	-.29160	-.30050	-.29830	-.26630
10.386	48.909	424.56850	-.33010	-.33010	-.31610	-.32670	-.32320	-.29080
	GRADIENT	.00000	.00000	.00000	.00000	.00000	.00000	.00000

RUN NO. 681/ 0 RN/L = 3.27 GRADIENT INTERVAL = -1.00/ 4.00

ALPHAO	DZ	Q(PSF)	PB1	PB2	PB4	LHLS	RHLS	PCAV
14.540	-.899	425.46220	-.38990	-.39230	-.37300	-.38840	-.38510	-.34920
14.539	1.681	425.33630	-.37960	-.38060	-.36110	-.37620	-.37300	-.33670
14.550	6.191	424.34070	-.34040	-.34170	-.32180	-.33710	-.33530	-.29520
14.577	13.669	424.96630	-.34850	-.34950	-.32970	-.34500	-.34200	-.30340
14.626	28.659	425.46060	-.34120	-.33980	-.32400	-.33830	-.33460	-.29710
14.654	43.807	424.96480	-.32710	-.32680	-.31210	-.32610	-.32120	-.28640
14.668	58.633	424.34370	-.31610	-.31510	-.30180	-.31510	-.31040	-.27570
	GRADIENT	-.04880	.00399	.00454	.00461	.00473	.00469	.00485

CA20 747/1 01 S1 ORBITER DATA (DGN080) (20 JAN 75)

REFERENCE DATA

SREF =	2690.0000 SQ.FT.	XMRP =	1109.0000 IN.XO		
LREF =	474.8100 IN.	YMRP =	.0000 IN.YO		
BREF =	936.6800 IN.	ZMRP =	375.0000 IN.ZO		
SCALE =	.0300				

PARAMETRIC DATA

ALPHAC =	4.000	BETAC =	-5.000
ELV-IB =	.000	ELV-OB =	3.000
ELEVON =	5.000	MACH =	.600
BETAO =	.000	PHI =	7.500
DX =	.000	DY =	10.000

RUN NO. 791/ 0 RN/L = 3.34 GRADIENT INTERVAL = -1.00/ 4.00

ALPHAO	DZ	Q(PSF)	PB1	PB2	PB4	LHLS	RHLS	PCAV
10.543	.273	422.71000	-.36240	-.37010	-.33820	-.34980	-.35340	.16520
10.537	3.154	422.33780	-.35870	-.36560	-.33250	-.34560	-.34940	.17400
10.543	7.602	423.20560	-.35500	-.36240	-.32850	-.34190	-.34540	.17270
10.546	14.948	422.21120	-.35430	-.36040	-.32570	-.33950	-.34470	.16700
10.563	30.456	423.33000	-.32990	-.33640	-.30060	-.31500	-.32050	.17520
10.569	45.266	422.33330	-.34180	-.34880	-.30970	-.32420	-.33060	.16520
10.573	47.765	424.07430	-.34990	-.35720	-.31770	-.33150	-.33860	.15320
	GRADIENT	-.12918	.00128	.00156	.00198	.00146	.00139	.00305

RUN NO. 792/ 0 RN/L = 3.33 GRADIENT INTERVAL = -1.00/ 4.00

ALPHAO	DZ	Q(PSF)	PB1	PB2	PB4	LHLS	RHLS	PCAV
14.693	2.086	423.08440	-.48570	-.49140	-.44350	-.46650	-.47660	.23610
14.684	4.700	423.20560	-.47830	-.48420	-.43670	-.45970	-.46860	.23800
14.679	9.002	423.70610	-.46060	-.46670	-.42130	-.44390	-.45110	.23360
14.683	16.383	423.82570	-.41560	-.42070	-.37920	-.39930	-.40800	.23740
14.691	31.443	422.20830	-.36540	-.36820	-.32910	-.34680	-.35750	.25060
14.694	46.562	422.45840	-.35650	-.35650	-.31880	-.33340	-.34940	.24990
14.693	61.369	422.58340	-.34030	-.33510	-.29830	-.30890	-.33190	.25430
	GRADIENT	.00000	.00000	.00000	.00000	.00000	.00000	.00000

CA20 747/1 01 SI ORBITER DATA (DGN081) (20 JAN 75)

REFERENCE DATA

SREF =	2690.0000 SQ.FT.	XMRP =	1109.0000 IN.XO		
LREF =	474.8100 IN.	YMRP =	.0000 IN.YO		
BREF =	936.6800 IN.	ZMRP =	375.0000 IN.ZO		
SCALE =	.0300				

PARAMETRIC DATA

ALPHAC =	4.000	BETAC =	-5.000
ELV-IB =	.000	ELV-OB =	3.000
ELEVON =	5.000	MACH =	.600
BETAO =	.000	PHI =	7.500
DX =	10.000	DY =	10.000

RUN NO. 752/ 0 RN/L = 3.25 GRADIENT INTERVAL = -1.00/ 4.00

ALPHAO	DZ	Q(PSF)	PB1	PB2	PB4	LHLS	RHLS	PCAV
10.346	-1.602	424.92060	-.35950	-.35470	-.33250	-.35350	-.35010	-1.45070
10.345	1.482	424.55240	-.34330	-.33980	-.31770	-.33830	-.33330	-1.44000
10.354	5.906	424.17780	-.32700	-.32290	-.30120	-.32180	-.31710	-1.43120
10.381	13.318	424.42650	-.31230	-.30860	-.28700	-.30650	-.30230	-1.44510
10.413	28.645	424.17940	-.30490	-.30080	-.28070	-.29920	-.29560	-1.45200
10.412	43.525	423.30620	-.28790	-.28590	-.26700	-.28210	-.27880	-1.45320
10.415	47.221	424.17940	-.29310	-.29110	-.27160	-.28700	-.28410	-1.45010
	GRADIENT	.00000	.00000	.00000	.00000	.00000	.00000	.00000

RUN NO. 755/ 0 RN/L = 3.25 GRADIENT INTERVAL = -1.00/ 4.00

ALPHAO	DZ	Q(PSF)	PB1	PB2	PB4	LHLS	RHLS	PCAV
14.608	-.248	424.92690	-.42300	-.42020	-.40540	-.41890	-.41540	-1.46770
14.598	2.722	424.30210	-.41120	-.40980	-.39460	-.40850	-.40470	-1.46390
14.593	7.480	424.30530	-.39940	-.39810	-.38260	-.39750	-.39190	-1.46390
14.598	14.602	424.92530	-.38760	-.38320	-.37070	-.38470	-.37910	-1.47330
14.613	29.687	423.92750	-.32110	-.31450	-.30630	-.31940	-.31240	-1.44690
14.617	44.725	423.43120	-.32780	-.32030	-.31320	-.32360	-.31980	-1.45760
14.621	59.760	424.18090	-.30640	-.29830	-.28980	-.29800	-.29900	-1.45070
	GRADIENT	-.21094	.00398	.00351	.00365	.00351	.00361	.00128

CA20 747/1 01 SI ORBITER DATA (DGN052) (20 JAN 75)

REFERENCE DATA

SREF =	2690.0000 SQ.FT.	XMRP =	1109.0000 IN.XO		
LREF =	474.8100 IN.	YMRP =	.0000 IN.YO		
BREF =	936.6800 IN.	ZMRP =	375.0000 IN.ZO		
SCALE =	.0300				

PARAMETRIC DATA

ALPHAC =	8.000	BETAC =	-5.000
ELV-IB =	.000	ELV-OB =	3.000
ELEVON =	5.000	MACH =	.600
BETAO =	.000	PHI =	7.500
DX =	.000	DY =	10.000

RUN NO. 798/ 0 RN/L = 3.28 GRADIENT INTERVAL = -1.00/ 4.00

ALPHAO	DZ	Q(PSF)	PB1	PB2	PB4	LHLS	RHLS	PCAV
10.341	-.270	423.69250	-.40300	-.39870	-.37690	-.39440	-.39050	.09920
10.486	.652	422.06670	-.41410	-.40970	-.38720	-.40420	-.40120	.09040
10.365	3.053	422.81370	-.39420	-.38890	-.36670	-.38460	-.38100	.11050
10.389	7.538	421.81500	-.37940	-.37530	-.35360	-.37060	-.36560	.12370
10.427	14.849	423.06080	-.40520	-.40000	-.37920	-.39560	-.39110	.09550
10.498	30.104	422.58240	-.37870	-.37340	-.35070	-.36690	-.36280	.10860
10.519	44.754	423.43070	-.34840	-.34360	-.32000	-.33520	-.33320	.13940
10.519	47.323	423.18830	-.34400	-.33970	-.31430	-.33030	-.32850	.14700
	GRADIENT	-.14623	.00378	.00410	.00417	.00400	.00398	.00440

RUN NO. 797/ 0 RN/L = 3.29 GRADIENT INTERVAL = -1.00/ 4.00

ALPHAO	DZ	Q(PSF)	PB1	PB2	PB4	LHLS	RHLS	PCAV
14.589	1.523	422.31830	-.50270	-.49910	-.46690	-.48660	-.49150	.21670
14.598	4.729	423.81470	-.49380	-.49200	-.45830	-.47990	-.48270	.21410
14.608	8.739	423.81780	-.50410	-.50170	-.46900	-.49030	-.49210	.19780
14.637	16.314	422.65490	-.40740	-.40450	-.37520	-.39560	-.39590	.24180
14.669	31.043	422.19180	-.39780	-.39410	-.36840	-.38400	-.38640	.22110
14.697	46.253	423.31590	-.37790	-.37270	-.34790	-.36270	-.36690	.21350
14.695	61.364	423.43230	-.36680	-.35720	-.33420	-.34560	-.35480	.21540
	GRADIENT	.00000	.00000	.00000	.00000	.00000	.00000	.00000

ORIGINAL PAGE IS
OF POOR QUALITY

CA20 747/1 01 SI ORBITER DATA (DGN083) (20 JAN 75)

REFERENCE DATA

SREF =	2690.0000 SQ.FT.	XMRP =	1109.0000 IN.XO		
LREF =	474.8100 IN.	YMRP =	.0000 IN.YO		
BREF =	936.6800 IN.	ZMRP =	375.0000 IN.ZO		
SCALE =	.0300				

PARAMETRIC DATA

ALPHAC =	8.000	BETAC =	-5.000
ELV-IB =	.000	ELV-OB =	3.000
ELEVON =	5.000	MACH =	.600
BETAO =	.000	PHI =	7.500
DX =	10.000	DY =	10.000

RUN NO. 753/ 0 RN/L = 3.25 GRADIENT INTERVAL = -1.00/ 4.00

ALPHAO	DZ	Q(PSF)	PB1	PB2	PB4	LHLS	RHLS	PCAV
10.157	-4.055	423.05760	-.35730	-.35270	-.33140	-.35230	-.34810	-1.44940
10.183	-1.077	422.92950	-.36250	-.35790	-.33820	-.35720	-.35420	-1.44180
10.217	3.434	422.93250	-.34330	-.33980	-.31880	-.33830	-.33400	-1.44320
10.253	10.894	423.30320	-.32920	-.32480	-.30630	-.32360	-.31990	-1.44320
10.325	26.227	423.92750	-.32040	-.31640	-.30010	-.31690	-.31170	-1.45950
10.368	40.888	423.67980	-.28790	-.28530	-.26930	-.28330	-.27940	-1.44880
10.380	47.654	423.80160	-.32110	-.31900	-.30400	-.31630	-.31310	-1.47900
	GRADIENT	.00000	.00000	.00000	.00000	.00000	.00000	.00000

RUN NO. 754/ 0 RN/L = 3.25 GRADIENT INTERVAL = -1.00/ 4.00

ALPHAO	DZ	Q(PSF)	PB1	PB2	PB4	LHLS	RHLS	PCAV
14.464	-1.083	423.17810	-.44440	-.44480	-.42480	-.44210	-.43830	-1.49340
14.477	1.853	423.68430	-.43700	-.43770	-.41790	-.43540	-.43160	-1.49280
14.493	6.138	423.67980	-.44290	-.44220	-.42300	-.43960	-.43560	-1.49910
14.525	13.721	424.79790	-.43110	-.42860	-.41170	-.42740	-.42350	-1.51160
14.575	28.934	424.17620	-.33510	-.32810	-.31660	-.33100	-.32450	-1.45130
14.596	44.022	423.17510	-.33370	-.32810	-.31830	-.32970	-.32590	-1.46330
14.608	58.528	424.54290	-.29230	-.28330	-.27330	-.28270	-.28410	-1.45450
	GRADIENT	.00000	.00000	.00000	.00000	.00000	.00000	.00000

CA20 747/1 01 S1 ORBITER DATA (DGN094) (20 JAN 75)

REFERENCE DATA

SREF =	2690.0000 SQ.FT.	XMRP =	1109.0000 IN.XO
LREF =	474.8100 IN.	YMRP =	.0000 IN.YO
BREF =	936.6800 IN.	ZMRP =	375.0000 IN.ZO
SCALE =	.0300		

PARAMETRIC DATA

ALPHAC =	4.000	BETAC =	.000
ELV-IB =	.000	ELV-OB =	3.000
ELEVON =	5.000	MACH =	.600
BETAO =	.000	PHI =	7.500
DX =	.000	DY =	.000

RUN NO. 705/ 0 RN/L = 3.19 GRADIENT INTERVAL = -1.00/ 4.00

ALPHAO	DZ	Q(PSF)	PB1	PB2	PB4	LHLS	RHLS	PCAV
10.477	-.781	423.55580	-.30490	-.30210	-.32050	-.31630	-.30360	-.29580
10.470	1.431	423.82820	-.34400	-.34290	-.36030	-.35600	-.34280	-.33720
10.466	6.105	422.82990	-.31300	-.31180	-.32900	-.32420	-.31170	-.30390
10.472	13.569	423.57950	-.31890	-.31700	-.33420	-.32650	-.31710	-.31150
10.485	28.308	423.20500	-.28720	-.28590	-.30280	-.29670	-.28610	-.27880
10.489	43.532	423.07700	-.28570	-.28390	-.30110	-.29490	-.28410	-.27690
10.490	47.201	422.95640	-.28200	-.28000	-.29710	-.29060	-.28010	-.27360
	GRADIENT	.10960	-.01768	-.01845	-.01800	-.01795	-.01736	-.01872

RUN NO. 704/ 0 RN/L = 3.19 GRADIENT INTERVAL = -1.00/ 4.00

ALPHAO	DZ	Q(PSF)	PB1	PB2	PB4	LHLS	RHLS	PCAV
15.435	6.448	423.33600	-.35950	-.35780	-.37120	-.37060	-.35680	-.35040
15.428	9.304	423.45800	-.33810	-.33640	-.35120	-.34980	-.33590	-.32970
15.423	12.875	423.20950	-.32920	-.32800	-.34270	-.34130	-.32650	-.32150
15.412	20.640	422.83290	-.32260	-.32150	-.33640	-.33520	-.32060	-.31520
15.415	36.108	423.70700	-.33740	-.33590	-.35120	-.34860	-.33530	-.33030
15.414	50.653	423.33000	-.31230	-.31050	-.32560	-.32480	-.31040	-.30140
14.609	60.670	424.44820	-.28860	-.28390	-.30280	-.29920	-.28690	-.27890
15.413	65.386	423.20650	-.29580	-.29430	-.31080	-.30690	-.29560	-.28700
	GRADIENT	.00000	.00000	.00000	.00000	.00000	.00000	.00000

CA20 747/1 01 SI ORBITER DATA (DGN085) (20 JAN 75)

REFERENCE DATA

SREF =	2690.0000 SQ.FT.	XMRP =	1109.0000 IN.XO		
LREF =	474.8100 IN.	YMRP =	.0000 IN.YO		
BREF =	936.6800 IN.	ZMRP =	375.0000 IN.ZO		
SCALE =	.0300				

PARAMETRIC DATA

ALPHAC =	4.000	BETAC =	.000
ELV-IB =	.000	ELV-OB =	3.000
ELEVON =	5.000	MACH =	.600
BETAO =	.000	PHI =	7.500
DX =	10.000	DY =	.000

RUN NO. 696/ 0 RN/L = 3.25 GRADIENT INTERVAL = -1.00/ 4.00

ALPHAO	DZ	Q(PSF)	PB1	PB2	PB4	LHLS	RHLS	PCAV
10.398	-1.550	424.46560	-.34410	-.34500	-.34280	-.34440	-.33800	-.31660
10.383	1.373	424.46720	-.33230	-.33330	-.33090	-.33340	-.32660	-.30210
10.381	5.899	424.09510	-.30050	-.30280	-.30010	-.30230	-.29630	-.27200
10.388	13.274	423.84940	-.28870	-.29050	-.28700	-.28950	-.28410	-.25940
10.407	28.273	424.09660	-.29170	-.29240	-.28990	-.29190	-.28620	-.26510
10.420	43.578	424.59630	-.29610	-.29570	-.29500	-.29690	-.29090	-.26880
10.422	48.458	423.97300	-.29460	-.29370	-.29270	-.29430	-.28950	-.26700
	GRADIENT	.00000	.00000	.00000	.00000	.00000	.00000	.00000

RUN NO. 695/ 0 RN/L = 3.26 GRADIENT INTERVAL = -1.00/ 4.00

ALPHAO	DZ	Q(PSF)	PB1	PB2	PB4	LHLS	RHLS	PCAV
14.697	1.100	423.96700	-.31530	-.31450	-.31260	-.31830	-.31110	-.28520
14.684	4.360	425.21350	-.28580	-.28470	-.28190	-.28820	-.28080	-.25500
14.678	8.649	425.21030	-.29020	-.28920	-.28690	-.29250	-.28480	-.25940
14.673	16.181	423.84040	-.30130	-.30090	-.29870	-.30350	-.29560	-.27070
14.676	31.096	425.08600	-.33300	-.33200	-.32920	-.33400	-.32660	-.30210
14.684	46.169	425.46060	-.32270	-.32030	-.31950	-.32430	-.31650	-.29210
14.686	61.197	424.46560	-.33080	-.32880	-.32750	-.33220	-.32390	-.30020
	GRADIENT	.00000	.00000	.00000	.00000	.00000	.00000	.00000

CA20 747/1 01 S1 ORBITER DATA (DGN0861 (20 JAN 75)

REFERENCE DATA

SREF =	2690.0000 SQ.FT.	XMRP =	1109.0000 IN.XO		
LREF =	474.8100 IN.	YMRP =	.0000 IN.YO		
BREF =	936.6900 IN.	ZMRP =	375.0000 IN.ZO		
SCALE =	.0300				

PARAMETRIC DATA

ALPHAC =	8.000	BETAC =	.000
ELV-IB =	.000	ELV-OB =	3.000
ELEVON =	5.000	MACH =	.600
BETAO =	.000	PHI =	7.500
DX =	.000	DY =	.000

RUN NO. 702/ 0 RN/L = 3.21 GRADIENT INTERVAL = -1.00/ 4.00

ALPHAO	DZ	Q(PSF)	PB1	PB2	PB4	LHLS	RHLS	PCAV
10.331	-1.338	422.95940	-.36470	-.36240	-.36030	-.36940	-.35950	-.33910
10.340	1.740	423.70860	-.34030	-.33980	-.33760	-.34500	-.33590	-.31520
10.363	6.289	424.45290	-.35730	-.35460	-.35280	-.36150	-.35210	-.33150
10.396	13.806	423.95570	-.35290	-.35070	-.34950	-.35660	-.34810	-.32840
10.462	28.633	424.32700	-.34110	-.33900	-.33930	-.34440	-.33660	-.31640
10.485	43.486	424.07640	-.30120	-.29950	-.29940	-.30590	-.29820	-.27630
10.489	47.086	423.08300	-.30340	-.30080	-.30110	-.30650	-.29880	-.27820
	GRADIENT	.00000	.00000	.00000	.00000	.00000	.00000	.00000

RUN NO. 703/ 0 RN/L = 3.20 GRADIENT INTERVAL = -1.00/ 4.00

ALPHAO	DZ	Q(PSF)	PB1	PB2	PB4	LHLS	RHLS	PCAV
14.513	1.005	423.70700	-.34920	-.34680	-.35410	-.35840	-.34600	-.33150
14.522	4.003	423.45950	-.38020	-.37860	-.38600	-.38850	-.37770	-.36290
14.535	8.390	424.57400	-.36620	-.36430	-.37630	-.37670	-.36360	-.35290
14.550	15.642	423.33450	-.35950	-.35650	-.36880	-.37000	-.35610	-.34800
15.384	35.410	423.58270	-.33660	-.33380	-.34720	-.34800	-.33330	-.32650
15.397	50.740	423.95100	-.32560	-.32350	-.33590	-.33700	-.32250	-.31520
15.393	65.244	423.70390	-.29600	-.29300	-.30630	-.30710	-.29420	-.28260
	GRADIENT	.00000	.00000	.00000	.00000	.00000	.00000	.00000

DATE 01 DEC 75 TABULATED SOURCE DATA - CA20

CA20 747/1 01 S1 ORBITER DATA (DGN087) (20 JAN 75)

REFERENCE DATA

SREF =	2690.0000 SQ.FT.	XMRP =	1109.0000	IN.XO	
LREF =	474.8100 IN.	YMRP =	.0000	IN.YO	
BREF =	935.6800 IN.	ZMRP =	375.0000	IN.ZO	
SCALE =	.0300				

PARAMETRIC DATA

ALPHAC =	8.000	BETAC =	.000
ELV-IB =	.000	ELV-OB =	3.000
ELEVON =	5.000	MACH =	.600
BETAO =	.000	PHI =	7.500
DX =	10.000	DY =	.000

RUN NO. 683/ 0 RN/L = 3.27 GRADIENT INTERVAL = -1.00/ 4.00

ALPHAO	DZ	Q(PSF)	PB1	PB2	PB4	LHLS	RHLS	PCAV
10.202	-2.848	425.33940	-.30870	-.30870	-.29780	-.30660	-.30230	-.27140
10.212	.552	424.84200	-.30650	-.30670	-.29590	-.30410	-.29960	-.26880
10.232	4.877	424.84350	-.31970	-.32160	-.30980	-.31820	-.31440	-.28270
10.267	12.472	424.46680	-.31310	-.31380	-.30070	-.30960	-.30640	-.27450
10.343	27.592	423.84490	-.32490	-.32750	-.31380	-.32120	-.31650	-.28710
10.377	42.540	424.96630	-.31010	-.31000	-.29840	-.30660	-.30300	-.27200
10.387	48.934	425.21660	-.31010	-.30930	-.29780	-.30590	-.30300	-.27200
	GRADIENT	.00000	.00000	.00000	.00000	.00000	.00000	.00000

RUN NO. 684/ 0 RN/L = 3.26 GRADIENT INTERVAL = -1.00/ 4.00

ALPHAO	DZ	Q(PSF)	PB1	PB2	PB4	LHLS	RHLS	PCAV
14.557	-1.221	424.21570	-.31310	-.31190	-.30640	-.31450	-.30840	-.27830
14.553	1.801	424.09060	-.36330	-.36120	-.35540	-.36270	-.35690	-.33040
14.564	6.393	423.71630	-.32570	-.32360	-.31830	-.32610	-.31980	-.29080
14.590	13.985	424.34070	-.33820	-.33720	-.33030	-.33830	-.33190	-.30400
14.632	28.717	424.96000	-.32420	-.32230	-.31720	-.32550	-.31850	-.29080
14.655	43.772	423.71380	-.31090	-.30930	-.30520	-.31270	-.30500	-.27760
14.654	48.457	423.59920	-.32490	-.32360	-.3[illegible]	-.32610	-.31910	-.26890
14.666	53.011	424.45930	-.30950	-.30480	-.3[illegible]30	-.30900	-.30100	-.27450
	GRADIENT	.00000	.00000	.00000	.00000	.00000	.00000	.00000

CA20 747/1 01 S1 ORBITER DATA (DGN088) (20 JAN 75)

REFERENCE DATA

SREF =	2690.0000 SQ.FT.	XMRP =	1109.0000 IN.XO
LREF =	474.8100 IN.	YMRP =	.0000 IN.YO
BREF =	936.6800 IN.	ZMRP =	375.0000 IN.ZO
SCALE =	.0300		

PARAMETRIC DATA

ALPHAC =	4.000	BETAC =	.000
ELV-IB =	.000	ELV-OB =	3.000
ELEVON =	5.000	MACH =	.600
GETAO =	.000	PHI =	7.500
DX =	.000	DY =	10.000

RUN NO. 790/ 0 RN/L = 3.35 GRADIENT INTERVAL = -1.00/ 4.00

ALPHAO	DZ	Q(PSF)	PB1	PB2	PB4	LHLS	RHLS	PCAV
10.555	.254	423.95160	-.35210	-.36430	-.33930	-.33550	-.34540	.18460
10.549	3.398	422.56490	-.32780	-.33900	-.31140	-.31570	-.32180	.20720
10.551	7.733	423.21030	-.33070	-.34230	-.31490	-.31930	-.32520	.19530
10.556	15.401	423.70300	-.33550	-.34750	-.31880	-.32420	-.33060	.18710
10.567	30.165	424.07740	-.32180	-.33130	-.30120	-.30830	-.31440	.18210
10.572	45.459	422.20690	-.32030	-.33060	-.29830	-.30590	-.31170	.17710
10.573	47.767	422.96000	-.32260	-.33320	-.29990	-.30650	-.31370	.17710
	GRADIENT	-.43469	.00798	.00805	.00887	.00757	.00751	.00719

RUN NO. 793/ 0 RN/L = 3.32 GRADIENT INTERVAL = -1.00/ 4.00

ALPHAO	DZ	Q(PSF)	PB1	PB2	PB4	LHLS	RHLS	PCAV
14.705	1.985	423.08590	-.44290	-.44530	-.40030	-.42130	-.43290	.29200
14.705	4.790	422.83650	-.41700	-.42010	-.37690	-.39970	-.40880	.27130
14.694	8.916	422.71450	-.40150	-.40450	-.36100	-.38400	-.39160	.27320
14.687	16.371	422.21120	-.38310	-.38570	-.34390	-.36690	-.37360	.26750
14.692	31.267	423.20550	-.37350	-.37600	-.33710	-.35780	-.36490	.25060
14.697	46.547	422.58040	-.35360	-.35260	-.31490	-.33400	-.34540	.25680
14.696	61.277	422.45590	-.33880	-.33260	-.29660	-.31080	-.32990	.25940
	GRADIENT	.00000	.00000	.00000	.00000	.00000	.00000	.00000

ORIGINAL PAGE IS
OF POOR QUALITY

CA20 747/1 01 SI ORBITER DATA (DGN089) (20 JAN 75)

REFERENCE DATA

SREF =	2690.0000 SQ.FT.	XMRP =	1109.0000 IN.XO		
LREF =	474.8100 IN.	YMRP =	.0000 IN.YO		
BREF =	936.6900 IN.	ZMRP =	375.0000 IN.ZO		
SCALE =	.0300				

PARAMETRIC DATA

ALPHAC =	4.000	BETAC =	.000
ELV-IB =	.000	ELV-OB =	3.010
ELEVON =	5.000	MACH =	.600
BETAO =	.000	PHI =	7.500
DX =	10.000	DY =	10.000

RUN NO. 748/ 0 RN/L = 3.31 GRADIENT INTERVAL = -1.00/ 4.00

ALPHAO	DZ	Q(PSF)	PB1	PB2	PB4	LHLS	RHLS	PCAV
10.378	-1.632	424.17780	-.30490	-.32220	-.28700	-.29130	-.29560	-1.41110
10.387	1.664	424.05340	-.28790	-.30410	-.26530	-.27360	-.27670	-1.38040
10.394	6.264	424.05190	-.32780	-.34230	-.30400	-.31320	-.31710	-1.42940
10.402	13.375	424.55080	-.31300	-.32550	-.28640	-.29740	-.30160	-1.42180
10.423	28.632	424.92210	-.29450	-.30670	-.26820	-.28150	-.28480	-1.42430
10.434	43.683	424.67200	-.29680	-.30990	-.27220	-.28390	-.28690	-1.44820
10.431	47.364	424.30210	-.27760	-.29110	-.25220	-.26500	-.26800	-1.42620
	GRADIENT	.00000	.00000	.00000	.00000	.00000	.00000	.00000

RUN NO. 751/ 0 RN/L = 3.25 GRADIENT INTERVAL = -1.00/ 4.00

ALPHAO	DZ	Q(PSF)	PB1	PB2	PB4	LHLS	RHLS	PCAV
14.603	-.240	423.42370	-.40450	-.40330	-.37520	-.39750	-.39660	-1.44690
14.595	2.648	423.55180	-.39270	-.39100	-.36380	-.37710	-.38510	-1.44070
14.596	7.191	423.17360	-.35620	-.36180	-.33590	-.35900	-.35750	-1.43500
14.595	14.612	423.55030	-.36170	-.35730	-.33190	-.35480	-.35280	-1.43500
14.603	29.756	423.17210	-.32260	-.31640	-.28550	-.31810	-.31390	-1.43120
14.61.	44.626	422.79840	-.31230	-.30540	-.28410	-.30530	-.30230	-1.43000
14.611	59.694	423.67530	-.28720	-.28010	-.25960	-.27910	-.27740	-1.42240
	GRADIENT	.04435	.00409	.00426	.00395	.00360	.00398	.00215

CA20 747/1 01 SI ORBITER DATA (DGN090) (20 JAN 75)

REFERENCE DATA

SREF =	2690.0000 SQ.FT.	XMRP =	1109.0000 IN.XO		
LREF =	474.8100 IN.	YMRP =	.0000 IN.YO		
BREF =	936.6800 IN.	ZMRP =	375.0000 IN.ZO		
SCALE =	.0300				

PARAMETRIC DATA

ALPHAC =	8.000	BETAC =	.000
ELV-1B =	.000	ELV-0B =	3.000
ELEVON =	5.000	MACH =	.800
BETAO =	.000	PHI =	7.500
DX =	.000	DY =	10.000

RUN NO. 799/ 0 RN/L = 3.28 GRADIENT INTERVAL = -1.00/ 4.00

ALPHAO	DZ	Q(PSF)	PB1	PB2	PB4	LHLS	RHLS	PCAV
10.357	-.035	423.18520	-.38530	-.38180	-.36040	-.37670	-.37160	.11990
10.375	3.161	422.43890	-.37940	-.37660	-.35470	-.37120	-.35620	.12810
10.396	7.497	423.06080	-.38600	-.38180	-.36040	-.37730	-.37230	.12500
10.435	14.798	423.69230	-.38160	-.37730	-.35530	-.37180	-.36690	.12560
10.484	29.812	421.93860	-.35590	-.35130	-.32970	-.34500	-.34200	.14070
10.518	45.359	422.30480	-.36240	-.35850	-.33540	-.34880	-.34670	.13750
10.522	47.338	423.05450	-.35730	-.35460	-.33190	-.34430	-.34270	.13500
	GRADIENT	-.23353	.00165	.00163	.00178	.00172	.00169	.00257

RUN NO. 796/ 0 RN/L = 3.29 GRADIENT INTERVAL = -1.00/ 4.00

ALPHAO	DZ	Q(PSF)	PB1	PB2	PB4	LHLS	RHLS	PCAV
14.594	1.481	422.44640	-.48270	-.48030	-.44350	-.46400	-.47190	.24050
14.602	4.549	421.81650	-.46580	-.46410	-.42700	-.44870	-.45380	.24490
14.617	8.657	422.19930	-.44580	-.44530	-.40840	-.43040	-.43490	.23930
14.642	16.518	422.69490	-.42680	-.42720	-.39400	-.41520	-.41670	.23660
14.671	31.266	422.69040	-.38600	-.38250	-.35470	-.37240	-.37360	.23740
14.697	46.167	423.06710	-.37570	-.37210	-.34500	-.36080	-.36420	.22800
14.696	61.030	423.18990	-.35580	-.34750	-.32340	-.33640	-.34400	.22730
	GRADIENT	.00000	.00000	.00000	.00000	.00000	.00000	.00000

DATE 01 DEC 75 TABULATED SOURCE DATA - CA20

CA20 747/1 01 S1 ORBITER DATA (OGN0B11 (20 JAN 75)

REFERENCE DATA

SREF =	2690.0000 SQ.FT.	XMRP =	1109.0000 IN.XO		
LREF =	474.8100 IN.	YMRP =	.0000 IN.YO		
BREF =	936.6800 IN.	ZMRP =	375.0000 IN.ZO		
SCALE =	.0300				

PARAMETRIC DATA

ALPHAC =	8.000	BETAC =	.000
ELV-1B =	.000	ELV-0B =	3.000
ELEVON =	5.000	MACH =	.600
BETAO =	.000	PHI =	7.500
DX =	10.000	DY =	10.000

RUN NO. 749/ 0 RN/L = 3.28 GRADIENT INTERVAL = -1.00/ 4.00

ALPHAO	DZ	Q(PSF)	PB1	PB2	PB4	LHLS	RHLS	PCAV
10.211	-2.473	424.05190	-.32850	-.33460	-.29380	-.31690	-.31980	-1.37600
10.231	.684	423.30620	-.31370	-.31900	-.27840	-.30280	-.30500	-1.36970
10.254	5.170	423.29870	-.31960	-.32420	-.28350	-.30640	-.31110	-1.37970
10.284	12.734	423.04710	-.31670	-.31370	-.28010	-.30470	-.30640	-1.38040
10.350	27.679	423.29870	-.32330	-.32480	-.28750	-.31140	-.31310	-1.41490
10.390	42.827	423.54580	-.30640	-.30930	-.27390	-.29550	-.29690	-1.42310
10.396	47.827	424.41700	-.29310	-.29440	-.26020	-.28270	-.28410	-1.42550
	GRADIENT	.00000	.00000	.00000	.00000	.00000	.00000	.00000

RUN NO. 750/ 0 RN/L = 3.26 GRADIENT INTERVAL = -1.00/ 4.00

ALPHAO	DZ	Q(PSF)	PB1	PB2	PB4	LHLS	RHLS	PCAV
14.459	-1.845	423.54730	-.44880	-.45130	-.41340	-.43960	-.44240	-1.47020
14.468	1.617	423.42070	-.41780	-.42020	-.38320	-.40970	-.41210	-1.44690
14.487	6.361	424.41700	-.43700	-.43770	-.40310	-.42930	-.43030	-1.48400
14.517	13.973	424.41390	-.42150	-.42020	-.38830	-.41340	-.41410	-1.48340
14.559	28.740	423.91810	-.35470	-.36050	-.33250	-.35660	-.35480	-1.44680
14.582	41.006	423.54430	-.35580	-.35090	-.32450	-.34740	-.34610	-1.46950
14.586	42.477	424.28640	-.35680	-.35340	-.32710	-.35050	-.34880	-1.48150
14.596	58.866	423.91900	-.32780	-.32220	-.29610	-.31810	-.31780	-1.44880
	GRADIENT	.00000	.00000	.00000	.00000	.00000	.00000	.00000

CA20 747/1 01 S1 ORBITER DATA (DGN092) (20 JAN 75)

REFERENCE DATA

SREF =	2690.0000 SQ.FT.	XMRP =	1109.0000 IN.XO
LREF =	474.8100 IN.	YMRP =	.0000 IN.YO
BREF =	933.6800 IN.	ZMRP =	375.0000 IN.ZO
SCALE =	.0300		

PARAMETRIC DATA

ALPHAC =	4.000	BETAC =	5.000
ELV-IB =	.000	ELV-OB =	3.000
ELEVON =	5.000	MACH =	.600
BETAO =	.000	PHI =	7.500
DX =	.000	DY =	10.000

RUN NO. 793/ 0 CN/L = 3.37 GRADIENT INTERVAL = -1.00/ 4.00

ALPHAO	DZ	Q(PSF)	PB1	PB2	PB4	LHLS	RHLS	PCAV
10.577	-.150	422.63330	-.34180	-.35520	-.34560	-.33520	-.34000	.17520
10.573	3.339	423.46590	-.34000	-.35780	-.34730	-.33580	-.34330	.17080
10.574	7.765	423.70300	-.33380	-.34680	-.33710	-.32600	-.33260	.17020
10.561	15.573	422.56340	-.31810	-.33060	-.32000	-.31020	-.31640	.17650
10.569	30.037	422.08770	-.31890	-.33130	-.31830	-.30950	-.31570	.16010
10.574	45.241	423.20330	-.31740	-.33320	-.31430	-.30650	-.31300	.16330
10.574	47.760	422.70350	-.32850	-.34620	-.32450	-.31690	-.32380	.15320
	GRADIENT	.17595	-.00092	-.00073	-.00048	-.00017	-.00093	-.00124

RUN NO. 794/ 0 CN/L = 3.31 GRADIENT INTERVAL = -1.00/ 4.00

ALPHAO	DZ	Q(PSF)	PB1	PB2	PB4	LHLS	RHLS	PCAV
14.741	1.933	422.33180	-.41630	-.41750	-.37690	-.39750	-.40660	.26120
14.723	4.632	422.03080	-.42070	-.42140	-.38090	-.40230	-.41000	.25660
14.712	8.933	423.70140	-.42650	-.42850	-.38660	-.40910	-.41610	.24740
14.701	16.684	422.70700	-.41330	-.41420	-.37280	-.39550	-.40260	.24950
14.695	31.346	423.70300	-.37230	-.37270	-.33480	-.35590	-.36150	.26380
14.693	46.698	422.70700	-.35380	-.35070	-.31370	-.33340	-.34270	.25940
14.699	61.405	423.20230	-.34320	-.33710	-.30180	-.31870	-.33260	.25910
	GRADIENT	.00000	.00000	.00000	.00000	.00000	.00000	.00000

CA20 747/1 01 S1 ORBITER DATA (DGN093) (20 JAN 75)

REFERENCE DATA

SREF =	2820.0000 SQ.FT.	XMRP =	1109.0000 IN.XO		
LREF =	474.8100 IN.	YMRP =	.0000 IN.YO		
BREF =	936.6800 IN.	ZMRP =	375.0000 IN.ZO		
SCALE =	.0300				

PARAMETRIC DATA

ALPHAC =	4.000	BETAC =	5.000
ELV-IB =	.000	ELV-OB =	3.000
ELEVON =	5.000	MACH =	.600
BETAO =	.000	PHI =	7.500
DX =	10.000	DY =	10.000

RUN NO. 756/ 0 RN/L = 3.27 GRADIENT INTERVAL = -1.00/ 4.00

ALPHAO	DZ	Q(PSF)	PB1	PB2	PB4	LHLS	RHLS	PCAV
10.407	-1.572	424.31160	-.29230	-.29110	-.27560	-.29070	-.28410	-1.42560
10.397	1.296	424.06440	-.31520	-.31250	-.29840	-.31260	-.30640	-1.45010
10.396	5.872	424.93640	-.29380	-.29110	-.27560	-.29000	-.28410	-1.43000
10.403	13.650	424.31160	-.29450	-.29180	-.27730	-.29130	-.28480	-1.43810
10.415	28.531	423.68580	-.27980	-.27820	-.26360	-.27660	-.27000	-1.44440
10.423	43.642	424.18880	-.28050	-.28010	-.26420	-.27720	-.27130	-1.46450
10.426	47.246	424.93320	-.30860	-.30800	-.29150	-.30410	-.29960	-1.49720
	GRADIENT	.00000	.00000	.00000	.00000	.00000	.00000	.00000

RUN NO. 759/ 0 RN/L = 3.24 GRADIENT INTERVAL = -1.00/ 4.00

ALPHAO	DZ	Q(PSF)	PB1	PB2	PB4	LHLS	RHLS	PCAV
14.648	-.347	424.43590	-.31300	-.31380	-.29950	-.31320	-.30840	-1.40990
14.628	2.782	424.93320	-.31520	-.31380	-.30290	-.31630	-.30970	-1.42940
14.615	7.144	423.30920	-.32850	-.32480	-.31430	-.32670	-.32120	-1.43310
14.606	14.929	423.06050	-.34400	-.34230	-.33020	-.34260	-.33730	-1.46330
14.610	29.445	422.93100	-.36540	-.36050	-.35240	-.36330	-.35690	-1.51600
14.615	44.674	423.30620	-.34110	-.33460	-.32850	-.33890	-.33260	-1.51660
14.618	59.607	423.05760	-.31300	-.30470	-.29950	-.30590	-.30570	-1.47580
	GRADIENT	.15995	-.00071	.00000	-.00109	-.00100	-.00042	-.00627

CA20 747/1 01 SI ORBITER DATA (OGN094) (20 JAN 75)

REFERENCE DATA

SREF =	2690.0000 SQ.FT.	XMRP =	1109.0000 IN.XO		
LREF =	474.8100 IN.	YMRP =	.0000 IN.YO		
BREF =	936.6800 IN.	ZMRP =	375.0000 IN.ZO		
SCALE =	.0300				

PARAMETRIC DATA

ALPHAC =	8.000	BETAC =	5.000
ELV-IB =	.000	ELV-OB =	3.000
ELEVON =	5.000	MACH =	.600
BETAO =	.000	PHI =	7.500
DX =	.000	DY =	10.000

RUN NO. 800/ 0 RN/L = 3.28 GRADIENT INTERVAL = -1.00/ 4.00

ALPHAO	DZ	Q(PSF)	PB1	PB2	PB4	LHLS	RHLS	PCAV
10.383	-.121	422.05920	-.39780	-.39410	-.37410	-.39890	-.39510	.10610
10.394	3.280	422.06070	-.39640	-.39150	-.37070	-.39710	-.38170	.10740
10.408	7.350	423.55660	-.40230	-.39870	-.37810	-.39440	-.38850	.09920
10.448	15.415	422.30930	-.39340	-.38760	-.36840	-.38340	-.37840	.10880
10.505	30.092	422.80420	-.38600	-.37890	-.36100	-.37550	-.37090	.10610
10.523	45.305	422.68290	-.35870	-.35520	-.33480	-.34800	-.34330	.13250
10.526	47.357	423.55030	-.36610	-.36240	-.34050	-.35350	-.35080	.12430
	GRADIENT	.00044	.00041	.00076	.00100	.00053	.00100	.00038

RUN NO. 795/ 0 RN/L = 3.30 GRADIENT INTERVAL = -1.00/ 4.00

ALPHAO	DZ	Q(PSF)	PB1	PB2	PB4	LHLS	RHLS	PCAV
14.609	1.223	422.82450	-.50120	-.50040	-.45950	-.48050	-.49210	.22480
14.604	4.295	423.20250	-.48130	-.48160	-.43840	-.46220	-.47060	.24370
14.610	9.099	423.31740	-.47760	-.47780	-.43730	-.46030	-.46590	.23240
14.633	16.424	421.81950	-.46280	-.46280	-.42590	-.44750	-.45110	.21290
14.673	31.163	423.06710	-.39930	-.39480	-.36500	-.38340	-.38640	.23930
14.686	46.448	422.81640	-.37420	-.37080	-.34050	-.35900	-.36290	.23680
14.698	61.101	423.43380	-.35870	-.35130	-.32400	-.33890	-.34740	.22860
	GRADIENT	.00000	.00000	.00000	.00000	.00000	.00000	.00000

CA20 747/1 01 S1 ORBITER DATA (DGN095) (20 JAN 75)

REFERENCE DATA

SREF = 2690.0000 SQ.FT. XMRP = 1109.0000 IN.XO
LREF = 474.8100 IN. YMRP = .0000 IN.YO
BREF = 936.6800 IN. ZMRP = 375.0000 IN.ZO
SCALE = .0300

PARAMETRIC DATA

ALPHAC = 8.000 BETAC = 5.000
ELV-IB = .000 ELV-OB = 3.000
ELEVON = 5.000 MACH = .600
BETAO = .000 PHI = 7.500
DX = 10.000 DY = 10.000

RUN NO. 757/ 0 RN/L = 3.26 GRADIENT INTERVAL = -1.00/ 4.00

ALPHAO	DZ	Q(PSF)	PB1	PB2	PB4	LHLS	RHLS	PCAV
10.229	-2.945	424.68460	-.33510	-.33720	-.31940	-.33340	-.32860	-1.44130
10.238	.916	423.93690	-.33290	-.33260	-.31540	-.32970	-.32520	-1.43370
10.254	5.217	423.06060	-.32780	-.32740	-.31140	-.32480	-.31980	-1.42870
10.286	12.241	424.05970	-.33070	-.32870	-.31260	-.32610	-.32180	-1.44510
10.352	27.562	424.18090	-.31370	-.31060	-.29660	-.30960	-.30430	-1.46010
10.383	42.621	423.68430	-.30640	-.30470	-.28810	-.30230	-.29690	-1.46830
10.385	47.697	423.80930	-.27760	-.27690	-.25850	-.27360	-.26800	-1.44440
	GRADIENT	.00000	.00000	.00000	.00000	.00000	.00000	.00000

RUN NO. 758/ 0 RN/L = 3.26 GRADIENT INTERVAL = -1.00/ 4.00

ALPHAO	DZ	Q(PSF)	PB1	PB2	PB4	LHLS	RHLS	PCAV
14.510	-1.170	424.18090	-.38830	-.39160	-.37120	-.38650	-.38240	-1.46700
14.504	1.917	424.55710	-.44370	-.44800	-.42590	-.44030	-.43900	-1.48520
14.507	6.286	423.55930	-.39940	-.40330	-.38320	-.39630	-.39390	-1.43810
14.530	13.648	424.18090	-.42740	-.42990	-.41110	-.42380	-.42150	-1.49030
14.567	29.243	424.31000	-.39490	-.39290	-.38030	-.39140	-.38650	-1.47710
14.594	43.847	424.80260	-.34470	-.33980	-.32910	-.34010	-.33530	-1.46450
14.605	58.656	424.67830	-.30050	-.29370	-.28410	-.29190	-.29360	-1.43750
	GRADIENT	.00000	.00000	.00000	.00000	.00000	.00000	.00000

ORIGINAL PAGE IS
OF POOR QUALITY

CA20 747/1 01 S1 ORBITER DATA (DGN096) (20 JAN 75)

REFERENCE DATA

SREF =	2690.0000 SQ.FT.	XMRP =	1109.0000 IN.XO		
LREF =	474.8100 IN.	YMRP =	.0000 IN.YO		
BREF =	936.6900 IN.	ZMRP =	375.0000 IN.ZO		
SCALE =	.0300				

PARAMETRIC DATA

ALPHAC =	4.000	BETAC =	-5.000
ELV-IB =	.000	ELV-OB =	3.000
ELEVON =	5.000	MACH =	.600
BETAO =	-5.000	PHI =	7.500
DX =	.000	DY =	10.000

RUN NO. 804/ 0 RN/L = 3.28 GRADIENT INTERVAL = -1.00/ 4.00

ALPHAO	DZ	Q(PSF)	PB1	PB2	PB4	LHLS	RHLS	PCAV
10.581	.639	422.27510	-.51020	-.48360	-.48330	-.47510	-.49480	.84650
10.577	3.578	422.15310	-.50870	-.48100	-.48050	-.47320	-.49210	.85150
10.576	7.654	423.02290	-.51750	-.49210	-.48960	-.48360	-.50220	.84140
10.583	15.309	422.77420	-.51900	-.49340	-.49020	-.48480	-.50830	.83580
10.601	30.620	423.14410	-.52050	-.49530	-.49130	-.48730	-.51030	.83690
10.617	45.347	422.52400	-.51980	-.49500	-.49020	-.48790	-.50960	.85520
10.614	47.836	422.02800	-.51900	-.49470	-.48850	-.48670	-.50760	.86030
	GRADIENT	-.04150	.00051	.00088	.00095	.00065	.00092	.00170

RUN NO. 805/ 0 RN/L = 3.28 GRADIENT INTERVAL = -1.00/ 4.00

ALPHAO	DZ	Q(PSF)	PB1	PB2	PB4	LHLS	RHLS	PCAV
14.802	1.971	423.27310	-.53080	-.50700	-.50500	-.50070	-.51640	1.03360
14.786	4.974	423.39740	-.52930	-.50500	-.50270	-.49690	-.51370	1.03170
14.775	9.438	422.27960	-.54410	-.51660	-.51810	-.51170	-.52850	1.00340
14.774	16.557	423.02610	-.51750	-.49140	-.49250	-.48540	-.50160	1.00660
14.779	31.753	422.77420	-.53750	-.51090	-.51410	-.50500	-.51970	.98940
14.774	47.052	422.64360	-.50940	-.48100	-.48620	-.47570	-.49150	1.01410
14.772	61.439	422.15010	-.49390	-.46610	-.47310	-.46040	-.47670	1.02980
	GRADIENT	.00000	.00000	.00000	.00000	.00000	.00000	.00000

CA20 747/1 01 S1 ORBITER DATA (DGN097) (20 JAN 75)

REFERENCE DATA

SREF = 2690.0000 SQ.FT.	XMRP = 1109.0000 IN.XO		
LREF = 474.8100 IN.	YMRP = .0000 IN.YO		
BREF = 936.6900 IN.	ZMRP = 375.0000 IN.ZO		
SCALE = .0300			

PARAMETRIC DATA

ALPHAC =	8.000	BETAC =	-5.000
ELV-1B =	.000	ELV-0B =	3.000
ELEVON =	5.000	MACH =	.600
BETAO =	-5.000	PHI =	7.500
DX =	.000	DY =	10.000

RUN NO. 811/ 0 RN/L = 3.26 GRADIENT INTERVAL = -1.00/ 4.00

ALPHAO	DZ	Q(PSF)	PB1	PB2	PB4	LHLS	RHLS	PCAV
10.393	-.093	421.38920	-.54260	-.51860	-.52720	-.52020	-.54060	.78120
10.413	2.882	422.50510	-.55080	-.52580	-.53460	-.52760	-.54670	.77420
10.438	7.530	422.13040	-.54550	-.52060	-.52890	-.52210	-.54060	.77930
10.483	15.189	423.12670	-.55810	-.53290	-.54080	-.53430	-.55270	.77610
10.527	29.943	421.88350	-.55220	-.52770	-.53460	-.52880	-.54600	.79180
10.564	45.352	422.38390	-.52640	-.50440	-.51070	-.50560	-.52110	.84140
10.566	47.556	422.00550	-.53160	-.50960	-.51580	-.51050	-.52510	.83950
	GRADIENT	.37510	-.00276	-.00242	-.00249	-.00249	-.00205	-.00235

RUN NO. 810/ 0 RN/L = 3.26 GRADIENT INTERVAL = -1.00/ 4.00

ALPHAO	DZ	Q(PSF)	PB1	PB2	PB4	LHLS	RHLS	PCAV
14.680	.829	422.76480	-.51240	-.49080	-.49530	-.49150	-.50700	1.01220
14.684	3.926	421.89100	-.50790	-.48620	-.49070	-.48730	-.50020	1.01850
14.700	7.951	422.88600	-.54120	-.51860	-.52430	-.51900	-.53120	.97330
14.711	15.864	421.76140	-.53450	-.51090	-.51860	-.51110	-.52240	.96760
14.732	30.777	421.88950	-.54260	-.51860	-.52950	-.51900	-.52980	.97640
14.745	45.232	422.50980	-.52420	-.49790	-.51180	-.49950	-.50960	.93900
14.748	60.426	422.26260	-.51530	-.48880	-.50440	-.48970	-.50020	1.00720
	GRADIENT	-.28211	.00145	00149	.00149	.00136	.00220	.00203

CA20 747/1 01 S1 ORBITER DATA (DGM098) (20 JAN 75)

REFERENCE DATA

SREF =	2690.0000 SQ.FT.	XMRP =	1109.0000 IN.XO		
LREF =	474.8100 IN.	YMRP =	.0000 IN.YO		
BREF =	938.6900 IN.	ZMRP =	375.0000 IN.ZO		
SCALE =	.0300				

PARAMETRIC DATA

ALPHAC =	4.000	BETAC =	.000
ELV-IB =	.000	ELV-OB =	3.000
ELEVON =	5.000	MACH =	.600
BETAO =	-5.000	PHI =	7.500
DX =	.000	DY =	10.000

RUN NO. 803/ 0 RN/L = 3.29 GRADIENT INTERVAL = -1.00/ 4.00

ALPHAO	DZ	Q(PSF)	PB1	PB2	PB4	LHLS	RHLS	PCAV
10.589	.754	421.77780	-.49480	-.46940	-.46970	-.45920	-.48070	.86400
10.591	3.692	421.40420	-.49240	-.46740	-.46680	-.45740	-.47870	.86840
10.595	7.812	423.02130	-.51020	-.48380	-.48330	-.47280	-.49350	.83950
10.597	15.159	422.65150	-.50350	-.47720	-.47540	-.46590	-.49080	.83950
10.599	28.483	422.77420	-.50280	-.47650	-.47420	-.46590	-.49210	.83950
10.609	45.607	423.02290	-.51310	-.48820	-.48390	-.47690	-.50220	.85460
10.609	47.846	422.64520	-.51160	-.48620	-.48280	-.47510	-.50020	.85590
	GRADIENT	-.12761	.00075	.00068	.00059	.00061	.00137	.00150

RUN NO. 806/ 0 RN/L = 3.28 GRADIENT INTERVAL = -1.00/ 4.00

ALPHAO	DZ	Q(PSF)	PB1	PB2	PB4	LHLS	RHLS	PCAV
14.807	2.070	423.28840	-.52640	-.50310	-.51160	-.49830	-.51440	1.00600
14.795	5.158	422.77270	-.53300	-.50890	-.51640	-.50440	-.52040	1.00530
14.785	9.244	421.89400	-.50570	-.48040	-.48360	-.47630	-.49150	1.02980
14.782	17.214	422.76790	-.51380	-.48680	-.49070	-.46480	-.49890	1.00030
14.782	31.651	421.77340	-.50350	-.47910	-.48160	-.47510	-.48810	1.00030
14.778	47.097	422.88070	-.50720	-.48170	-.48620	-.47810	-.49080	1.00030
14.777	61.642	423.01990	-.49980	-.47390	-.48110	-.47140	-.48410	1.02350
	GRADIENT	.00000	.00000	.00000	.00000	.00000	.00000	.00000

CA20 747/1 01 S1 ORBITER DATA (DGN099) (20 JAN 75)

REFERENCE DATA

SREF =	2690.0000 SQ.FT.	XMRP =	1109.0000 IN.XO		
LREF =	474.8100 IN.	YMRP =	.0000 IN.YO		
BREF =	936.6900 IN.	ZMRP =	375.0000 IN.ZO		
SCALE =	.0300				

PARAMETRIC DATA

ALPHAC =	8.000	BETAC =	.000
ELV-IB =	.000	ELV-OB =	3.000
ELEVON =	5.000	MACH =	.600
BETAD =	-5.000	PHI =	7.500
DX =	.000	DY =	10.000

RUN NO. 812/ 0 RN/L = 3.26 GRADIENT INTERVAL = -1.00/ 4.00

ALPHAO	DZ	Q(PSF)	PB1	PB2	PB4	LHLS	RHLS	PCAV
10.406	-.598	422.25790	-.54780	-.52450	-.53510	-.52760	-.54800	.77550
10.423	3.005	422.63260	-.54630	-.52250	-.53290	-.52640	-.54470	.77240
10.446	7.573	422.38390	-.54410	-.51930	-.53000	-.52390	-.53990	.77420
10.488	15.463	422.75220	-.54930	-.52320	-.53290	-.52700	-.54330	.77360
10.541	30.172	421.51280	-.53380	-.50830	-.51860	-.51170	-.52780	.79620
10.563	44.935	421.51280	-.53600	-.51150	-.52090	-.51410	-.52920	.81880
10.567	47.483	422.37920	-.54560	-.52190	-.53080	-.52450	-.53930	.81250
	GRADIENT	.10399	.00042	.00056	.00061	.00033	.00092	-.00086

RUN NO. 809/ 0 RN/L = 3.27 GRADIENT INTERVAL = -1.00/ 4.00

ALPHAO	DZ	Q(PSF)	PB1	PB2	PB4	LHLS	RHLS	PCAV
14.680	.880	422.38860	-.52860	-.50760	-.51290	-.50680	-.52510	.98400
14.694	3.893	421.51880	-.51980	-.49850	-.50380	-.49700	-.51370	.99280
14.701	8.089	422.14110	-.52570	-.50440	-.50950	-.50440	-.51700	.99150
14.719	15.576	422.88280	-.53300	-.51020	-.51690	-.51050	-.52180	.98070
14.734	30.598	422.01150	-.53820	-.51350	-.52320	-.51480	-.52510	.95760
14.751	45.433	422.25950	-.52790	-.50310	-.51350	-.50380	-.51370	.97580
14.752	60.072	422.26260	-.51680	-.49140	-.50380	-.49150	-.50160	.99840
	GRADIENT	-.28962	.00293	.00303	.00303	.00326	.00390	.00293

ORIGINAL PAGE IS
OF POOR QUALITY

CA20 747/1 01 S1 ORBITER DATA (OGN100) (20 JAN 75)

REFERENCE DATA

SREF =	2690.0000 SQ.FT.	XMRP =	1109.0000 IN.XO		
LREF =	474.8100 IN.	YMRP =	.0000 IN.YO		
BREF =	936.6800 IN.	ZMRP =	375.0000 IN.ZO		
SCALE =	.0300				

PARAMETRIC DATA

ALPHAC =	4.000	BETAC =	5.000
ELV-1B =	.000	ELV-0B =	3.000
ELEVON =	5.000	MACH =	.600
BETAO =	-5.000	PHI =	7.500
DX =	.000	DY =	10.000

RUN NO. 802/ 0 RN/L = 3.31 GRADIENT INTERVAL = -1.00/ 4.00

ALPHAO	DZ	Q(PSF)	PB1	PB2	PB4	LHLS	RHLS	PCAV
10.632	.542	422.53020	-.46440	-.44210	-.46000	-.42800	-.45850	.81130
10.612	3.365	422.89700	-.49320	-.46680	-.48330	-.45490	-.48000	.80190
10.597	7.664	422.53180	-.48280	-.45510	-.47140	-.44030	-.47130	.81390
10.597	15.623	423.27150	-.49320	-.46480	-.47940	-.44700	-.48340	.81630
10.604	30.599	422.27690	-.48280	-.45250	-.46460	-.43350	-.47460	.83260
10.607	45.321	422.62400	-.49320	-.46510	-.47370	-.44700	-.48470	.83540
10.608	47.816	422.02650	-.49690	-.47000	-.47650	-.45120	-.48810	.83700
	GRADIENT	.12900	-.01013	-.00869	-.00819	-.00946	-.00756	-.00331

RUN NO. 807/ 0 RN/L = 3.28 GRADIENT INTERVAL = -1.00/ 4.00

ALPHAO	DZ	Q(PSF)	PB1	PB2	PB4	LHLS	RHLS	PCAV
14.882	2.028	421.62330	-.49980	-.47720	-.47710	-.47380	-.49350	.92310
14.831	4.948	422.64050	-.51380	-.49210	-.49250	-.48850	-.50430	.94380
14.807	9.169	422.89390	-.51830	-.49400	-.49470	-.48970	-.50630	.96330
14.793	16.781	421.39670	-.49930	-.47330	-.47540	-.46960	-.48470	.93150
14.783	31.685	422.26690	-.50790	-.48100	-.48560	-.47750	-.49150	.95400
14.782	46.800	422.64050	-.49760	-.47200	-.47710	-.46830	-.48280	.93460
14.777	61.889	423.00870	-.49760	-.47000	-.47710	-.46710	-.48140	1.01470
	GRADIENT	.00000	.00000	.00000	.00000	.00000	.00000	.00000

CA20 747/1 01 S1 ORBITER DATA (DGN101) (20 JAN 75)

REFERENCE DATA

SREF =	2690.0000 SQ.FT.	XMRP =	1109.0000 IN.XO		
LREF =	474.8100 IN.	YMRP =	.0000 IN.YO		
BREF =	936.6800 IN.	ZMRP =	375.0000 IN.ZO		
SCALE =	.0300				

PARAMETRIC DATA

ALPHAC =	8.000	BETAC =	5.000
ELV-IB =	.000	ELV-OB =	3.000
ELEVON =	5.000	MACH =	.600
BETAO =	-5.000	PHI =	7.500
DX =	.000	DY =	10.000

RUN NO. 813/ 0 RN/L = 3.25 GRADIENT INTERVAL = -1.00/ 4.00

ALPHAO	DZ	Q(PSF)	PB1	PB2	PB4	LHLS	RHLS	PCAV
10.452	-.442	421.76140	-.53600	-.51410	-.53060	-.52090	-.53930	.71270
10.446	3.090	421.63940	-.51090	-.48990	-.50330	-.49580	-.50830	.75100
10.457	7.446	421.76290	-.51680	-.49140	-.50500	-.49770	-.51100	.75410
10.492	15.406	422.63420	-.52120	-.49400	-.50780	-.49950	-.51500	.77050
10.544	30.322	422.13200	-.51750	-.49010	-.50330	-.49460	-.51100	.78740
10.565	44.966	422.62790	-.52340	-.49720	-.50900	-.50010	-.51570	.80940
10.569	47.470	421.63490	-.54560	-.51990	-.53230	-.52330	-.53930	.78740
	GRADIENT	-.03454	.00711	.00716	.00773	.00711	.00878	.01084

RUN NO. 809/ 0 RN/L = 3.28 GRADIENT INTERVAL = -1.00/ 4.00

ALPHAO	DZ	Q(PSF)	PB1	PB2	PB4	LHLS	RHLS	PCAV
14.737	1.500	421.69100	-.53750	-.51800	-.52260	-.51410	-.53560	.93940
14.727	4.732	422.02050	-.53450	-.51280	-.51750	-.50930	-.52980	.94760
14.725	9.125	423.13620	-.53530	-.51020	-.51470	-.50740	-.52680	.95260
14.735	16.820	421.51730	-.49540	-.47070	-.47540	-.46930	-.48410	.97640
14.755	31.671	423.00720	-.53160	-.50700	-.51280	-.50310	-.51840	.95630
14.761	46.564	422.63730	-.51990	-.49400	-.50210	-.49090	-.50550	.96070
14.756	61.712	422.36540	-.48650	-.46030	-.47140	-.45900	-.47330	1.02480
	GRADIENT	.00000	.00000	.00000	.00000	.00000	.00000	.00000

CA20 747/1 01 S1 ORBITER DATA (DGN102) (20 JAN 75)

REFERENCE DATA

SREF =	2690.0000 SQ.FT.	XMRP =	1109.0000 IN.XO
LREF =	474.8100 IN.	YMRP =	.0000 IN.YO
BREF =	936.6800 IN.	ZMRP =	375.0000 IN.ZO
SCALE =	.0300		

PARAMETRIC DATA

ALPHAC =	4.000	BETAC =	-5.000
ELV-IB =	.000	ELV-OB =	3.000
ELEVON =	5.000	MACH =	.600
BETAO =	-5.000	PHI =	7.500
DX =	.000	DY =	10.000

RUN NO. 815/ 0 RN/L = 3.26 GRADIENT INTERVAL = -1.00/ 4.00

ALPHAO	DZ	Q(PSF)	PB1	PB2	PB4	LHLS	RHLS	PCAV
14.790	1.983	423.00400	-.52710	-.50370	-.52430	-.50860	-.52450	1.02100
14.773	4.601	422.25830	-.51750	-.49340	-.51470	-.49640	-.51230	1.02600
14.771	9.259	422.01000	-.50060	-.47520	-.49700	-.47750	-.49480	1.01540
14.770	16.962	422.63260	-.50130	-.47460	-.49810	-.47630	-.49350	.99780
14.773	31.582	422.25540	-.49460	-.46740	-.49250	-.46950	-.48610	1.00850
14.769	46.760	422.60670	-.49210	-.45380	-.47940	-.45490	-.47190	1.01030
14.768	61.866	422.38230	-.47250	-.44410	-.47080	-.44580	-.46120	1.04110
	GRADIENT	.00000	.00000	.00000	.00000	.00000	.00000	.00000

CA20 747/1 01 S1 ORBITER DATA (DGN103) (20 JAN 75)

REFERENCE DATA

SREF =	2690.0000 SQ.FT.	XMRP =	1109.0000 IN.XO
LREF =	474.8100 IN.	YMRP =	.0000 IN.YO
BREF =	936.6800 IN.	ZMRP =	375.0000 IN.ZO
SCALE =	.0300		

PARAMETRIC DATA

ALPHAC =	4.000	BETAC =	.000
ELV-IB =	.000	ELV-OB =	3.000
ELEVON =	5.000	MACH =	.600
BETAO =	-5.000	PHI =	7.500
DX =	.000	DY =	10.000

RUN NO. 814/ 0 RN/L = 3.24 GRADIENT INTERVAL = -1.00/ 4.00

ALPHAO	DZ	Q(PSF)	PB1	PB2	PB4	LHLS	RHLS	PCAV
14.793	2.161	422.25480	-.50790	-.48360	-.50330	-.48670	-.50220	1.00600
14.782	5.231	422.01000	-.50350	-.47780	-.49930	-.48180	-.49690	1.02170
14.771	9.123	421.38630	-.52710	-.50310	-.52490	-.50680	-.51840	.99840
14.766	16.756	421.75990	-.50650	-.48170	-.50440	-.48610	-.49690	.98330
14.769	31.625	422.50510	-.51240	-.48620	-.51070	-.48910	-.50160	.97830
14.767	46.769	422.50820	-.47550	-.44800	-.47310	-.45120	-.46450	1.01410
14.766	61.571	422.88500	-.49760	-.47000	-.49640	-.47260	-.48540	1.00850
	GRADIENT	.00000	.00000	.00000	.00000	.00000	.00000	.00000

CA20 747/1 01 SI ORBITER DATA (OGN104) (20 JAN 75)

REFERENCE DATA

SREF =	2690.0000 SQ.FT.	XMRP =	1109.0000 IN.XO
LREF =	474.8100 IN.	YMRP =	.0000 IN.YO
BREF =	936.6800 IN.	ZMRP =	375.0000 IN.ZO
SCALE =	.0300		

PARAMETRIC DATA

ALPHAC =	4.000	BETAC =	-5.000
ELV-IB =	.000	ELV-OB =	3.000
ELEVON =	5.000	MACH =	.600
BETAO =	-5.000	PHI =	.000
DX =	10.000	DY =	.000

RUN NO. 830/ 0 RN/L = 3.29 GRADIENT INTERVAL = -1.00/ 4.00

ALPHAO	DZ	Q(PSF)	PB1	PB2	PB4	LHLS	RHLS	PCAV
10.325	-1.343	422.09090	-.53450	-.54260	-.50850	-.50490	-.54940	-1.09460
10.312	1.825	422.46540	-.56110	-.56660	-.52960	-.52870	-.57230	-1.12410
10.306	6.300	422.34110	-.55300	-.55760	-.51880	-.52020	-.56560	-1.11530
10.313	13.860	421.59340	-.53820	-.54070	-.50170	-.50430	-.54880	-1.09590
10.331	28.680	421.96810	-.54040	-.54070	-.50050	-.50680	-.55210	-1.10530
10.341	43.891	421.96490	-.53010	-.52900	-.48860	-.49700	-.54140	-1.11030
	GRADIENT	.00000	.00000	.00000	.00000	.00000	.00000	.00000

RUN NO. 835/ 0 RN/L = 3.27 GRADIENT INTERVAL = -1.00/ 4.00

ALPHAO	DZ	Q(PSF)	PB1	PB2	PB4	LHLS	RHLS	PCAV
14.692	1.273	422.09400	-.52490	-.50240	-.48400	-.48780	-.53870	-1.09650
14.668	4.371	421.59550	-.53450	-.51350	-.49310	-.49940	-.53800	-1.11280
14.657	8.918	421.72410	-.53230	-.50960	-.49030	-.49640	-.53130	-1.10780
14.654	16.303	421.22360	-.50650	-.48620	-.46520	-.47320	-.50500	-1.12040
14.657	31.560	420.59570	-.50430	-.48300	-.46120	-.46950	-.50030	-1.13610
14.663	46.389	420.97640	-.52640	-.50370	-.48570	-.49210	-.52250	-1.17060
14.672	61.453	420.73080	-.46510	-.45840	-.44360	-.44940	-.47740	-1.17060
	GRADIENT	.00000	.00000	.00000	.00000	.00000	.00000	.00000

ORIGINAL PAGE IS
OF POOR QUALITY

CA20 747/1 01 SI ORBITER DATA (DGN1051 (20 JAN 75)

REFERENCE DATA

SREF =	2690.0000 SQ.FT.	XMRP =	1109.0000 IN.XO
LREF =	474.8100 IN.	YMRP =	.0000 IN.YO
BREF =	936.6900 IN.	ZMRP =	375.0000 IN.ZO
SCALE =	.0300		

PARAMETRIC DATA

ALPHAC =	8.000	BETAC =	-5.000
ELV-IB =	.000	ELV-OB =	3.000
ELEVON =	5.000	MACH =	.600
BETAO =	-5.000	PHI =	.000
DX =	10.000	DY =	.000

RUN NO. 841/ 0 RN/L = 3.28 GRADIENT INTERVAL = -1.00/ 4.00

ALPHAO	DZ	Q(PSF)	PB1	PB2	PB4	LHLS	RHLS	PCAV
10.256	-3.049	421.55650	-.55740	-.54850	-.53900	-.53970	-.58710	-1.17750
10.307	-.020	422.34430	-.56330	-.55370	-.54270	-.54280	-.58240	-1.20450
10.328	4.578	420.97190	-.55080	-.53940	-.53020	-.53000	-.56760	-1.18860
10.359	12.050	420.64690	-.54660	-.53680	-.52790	-.52750	-.55630	-1.17560
10.437	27.169	420.72330	-.54410	-.53100	-.52450	-.52390	-.56020	-1.17810
10.469	41.992	422.34110	-.55670	-.54130	-.53700	-.53610	-.57370	-1.19010
	GRADIENT	.00000	.00000	.00000	.00000	.00000	.00000	.00000

RUN NO. 836/ 0 RN/L = 3.31 GRADIENT INTERVAL = -1.00/ 4.00

ALPHAO	DZ	Q(PSF)	PB1	PB2	PB4	LHLS	RHLS	PCAV
14.548	-.709	422.46860	-.53380	-.53280	-.52620	-.50980	-.55010	-1.16620
14.535	2.486	422.09400	-.52640	-.51930	-.50910	-.49700	-.52920	-1.16870
14.550	7.114	422.09240	-.52490	-.51610	-.50450	-.49390	-.52880	-1.15870
14.571	14.418	421.72090	-.49840	-.48690	-.47780	-.46950	-.50100	-1.13860
14.610	29.342	420.72330	-.50940	-.49470	-.48800	-.47990	-.51170	-1.16580
14.639	44.463	421.97440	-.51310	-.49530	-.49070	-.48300	-.51240	-1.17000
14.650	59.174	421.72250	-.50800	-.48560	-.48570	-.47750	-.50500	-1.22400
	GRADIENT	-.11727	.00232	.00426	.00535	.00401	.00654	-.00078

CA20 747/1 01 SI ORBITER DATA (DGN106) (20 JAN 75)

REFERENCE DATA

SREF =	2690.0000 SQ.FT.	XMRP =	1109.0000 IN.XO
LREF =	474.8100 IN.	YMRP =	.0000 IN.YO
BREF =	936.6800 IN.	ZMRP =	375.0000 IN.ZO
SCALE =	.0300		

PARAMETRIC DATA

ALPHAC =	4.000	BETAC =	-5.000
ELV-IB =	.000	ELV-OB =	3.000
ELEVON =	5.000	MACH =	.600
BETAO =	-5.000	PHI =	.000
DX =	.000	DY =	10.000

RUN NO. 844/ 0 RN/L = 3.30 GRADIENT INTERVAL = -1.00/ 4.00

ALPHAO	DZ	Q(PSF)	PB1	PB2	PB4	LHLS	RHLS	PCAV
10.440	-.766	420.82670	-.53300	-.52060	-.50110	-.50440	-.56220	-2.18690
10.421	2.266	421.32400	-.54410	-.52250	-.50170	-.50680	-.55690	-2.20770
10.417	6.604	421.19690	-.54040	-.51800	-.49710	-.50190	-.55350	-2.20080
10.423	14.060	420.95030	-.54550	-.52510	-.50570	-.50740	-.55350	-2.22150
10.442	29.281	422.69460	-.55220	-.53810	-.51130	-.51780	-.56420	-2.27800
10.451	44.256	421.57400	-.53150	-.52000	-.48860	-.49950	-.54400	-2.27550
	GRADIENT	.16403	-.00365	-.00063	-.00020	-.00079	.00178	-.00696

CA20 747/1 01 SI ORBITER DATA (DGN107) (20 JAN 75)

REFERENCE DATA

SREF =	2690.0000 SQ.FT.	XMRP =	1109.0000 IN.XO
LREF =	474.8100 IN.	YMRP =	.0000 IN.YO
BREF =	936.6800 IN.	ZMRP =	375.0000 IN.ZO
SCALE =	.0300		

PARAMETRIC DATA

ALPHAC =	4.000	BETAC =	-5.000
ELV-IB =	.000	ELV-OB =	3.000
ELEVON =	5.000	MACH =	.600
BETAO =	-5.000	PHI =	.000
DX =	10.000	DY =	10.000

RUN NO. 819/ 0 RN/L = 3.26 GRADIENT INTERVAL = -1.00/ 4.00

ALPHAO	DZ	Q(PSF)	PB1	PB2	PB4	LHLS	RHLS	PCAV
10.347	-1.294	421.97780	-.53010	-.50960	-.49530	-.49950	-.53860	-1.09570
10.332	1.624	421.60340	-.52640	-.50500	-.49020	-.49580	-.52350	-1.10200
10.329	6.160	421.72690	-.52930	-.50700	-.49[illegible]	-.49700	-.52920	-1.10200
10.340	13.665	421.47380	-.53230	-.51480	-.497[illegible]	-.50380	-.53390	-1.12020
10.361	28.609	421.97310	-.53750	-.52190	-.50330	-.51170	-.54200	-1.15780
10.373	43.844	421.60040	-.52420	-.50890	-.49250	-.50190	-.53050	-1.14790
	GRADIENT	.00000	.00000	.00000	.00000	.00000	.00000	.00000

CA20 747/1 01 SI ORBITER DATA (DGN107) (20 JAN 75)

REFERENCE DATA

SREF =	2690.0000 SQ.FT.	XMRP =	1109.0000 IN.XO
LREF =	474.8100 IN.	YMRP =	.0000 IN.YO
BREF =	935.6800 IN.	ZMRP =	375.0000 IN.ZO
SCALE =	.0300		

PARAMETRIC DATA

ALPHAC =	4.000	BETAC =	-5.000
ELV-IB =	.000	ELV-OB =	3.000
ELEVON =	5.000	MACH =	.600
BETAO =	-5.000	PHI =	.000
DX =	10.000	DY =	10.000

RUN NO. 820/ 0 RN/L = 3.25 GRADIENT INTERVAL = -1.00/ 4.00

ALPHAO	DZ	Q(PSF)	PB1	PB2	PB4	LHLS	RHLS	PCAV
14.674	2.198	421.85640	-.51530	-.48750	-.49190	-.48970	-.51230	-1.06620
14.656	5.136	421.47680	-.49390	-.46740	-.46970	-.46830	-.48680	-1.04800
14.660	9.779	421.69870	-.49020	-.46220	-.46510	-.46280	-.47930	-1.04490
14.655	17.264	422.83970	-.50350	-.47390	-.47990	-.47570	-.49010	-1.10960
14.666	32.135	422.09270	-.50200	-.47130	-.47940	-.47320	-.48610	-1.16170
14.659	47.232	421.71330	-.48510	-.45190	-.46230	-.45610	-.46860	-1.20190
14.671	62.086	422.83550	-.50350	-.47130	-.48110	-.47510	-.48880	-1.27530
	GRADIENT	.00000	.00000	.00000	.00000	.00000	.00000	.00000

CA20 747/1 01 SI ORBITER DATA (DGN108) (20 JAN 75)

REFERENCE DATA

SREF =	2690.0000 SQ.FT.	XMRP =	1109.0000 IN.XO
LREF =	474.8100 IN.	YMRP =	.0000 IN.YO
BREF =	935.6800 IN.	ZMRP =	375.0000 IN.ZO
SCALE =	.0300		

PARAMETRIC DATA

ALPHAC =	8.000	BETAC =	-5.000
ELV-IB =	.000	ELV-OB =	3.000
ELEVON =	5.000	MACH =	.600
BETAO =	-5.000	PHI =	.000
DX =	10.000	DY =	10.000

RUN NO. 827/ 0 RN/L = 3.23 GRADIENT INTERVAL = -1.00/ 4.00

ALPHAO	DZ	Q(PSF)	PB1	PB2	PB4	LHLS	RHLS	PCAV
10.123	-2.709	420.95140	-.51390	-.49790	-.49940	-.49330	-.52650	-1.12850
10.130	.522	420.46710	-.51460	-.49790	-.49940	-.49270	-.52380	-1.12660
10.153	4.682	420.71430	-.51900	-.50240	-.50340	-.49700	-.52790	-1.12540
10.189	12.431	421.83590	-.53380	-.52000	-.51820	-.51290	-.54340	-1.12920
10.262	27.432	421.33960	-.50720	-.49270	-.49310	-.48780	-.51850	-1.12160
10.293	42.263	422.08610	-.53010	-.51610	-.51820	-.51350	-.54270	-1.15990
	GRADIENT	.00000	.00000	.00000	.00000	.00000	.00000	.00000

CA20 747/1 01 SI ORBITER DATA (DGN108) (20 JAN 75)

REFERENCE DATA

SREF = 2690.0000 SQ.FT. XMRP = 1109.0000 IN.XO
LREF = 474.8100 IN. YMRP = .0000 IN.YO
BREF = 936.6800 IN. ZMRP = 375.0000 IN.ZO
SCALE = .0300

PARAMETRIC DATA

ALPHAC = 8.000 BETAC = -5.000
ELV-IB = .000 ELV-OB = 3.000
ELEVON = 5.000 MACH = .600
BETAO = -5.000 PHI = .000
DX = 10.000 DY = 10.000

RUN NO. 823/ 0 RN/L = 3.24 GRADIENT INTERVAL = -1.00/ 4.00

ALPHAO	DZ	Q(PSF)	PB1	PB2	PB4	LHLS	RHLS	PCAV
14.529	-.426	420.60420	-.48360	-.46870	-.46410	-.46040	-.48550	-1.05820
14.532	2.587	421.59970	-.49840	-.47910	-.47610	-.47260	-.49490	-1.07390
14.546	7.236	421.10300	-.49240	-.47260	-.46980	-.46710	-.48750	-1.06010
14.574	14.884	420.97790	-.48880	-.46680	-.46580	-.46340	-.48210	-1.07080
14.612	29.618	421.72410	-.49690	-.47200	-.47490	-.47070	-.48860	-1.14050
14.638	44.620	421.47510	-.49170	-.46480	-.46920	-.46520	-.48210	-1.16750
14.647	59.279	422.22310	-.48880	-.46230	-.46520	-.46160	-.47940	-1.21330
	GRADIENT	.33040	-.00491	-.00345	-.00398	-.00405	-.00312	-.00521

CA20 747/1 01 SI ORBITER DATA (DGN109) (20 JAN 75)

REFERENCE DATA

SREF = 2690.0000 SQ.FT. XMRP = 1109.0000 IN.XO
LREF = 474.8100 IN. YMRP = .0000 IN.YO
BREF = 936.6800 IN. ZMRP = 375.0000 IN.ZO
SCALE = .0300

PARAMETRIC DATA

ALPHAC = 4.000 BETAC = .000
ELV-IB = .000 ELV-OB = 3.000
ELEVON = 5.000 MACH = .600
BETAO = -5.000 PHI = .000
DX = 10.000 DY = .000

RUN NO. 831/ . RN/L = 3.27 GRADIENT INTERVAL = -1.00/ 4.00

ALPHAO	DZ	Q(PSF)	PB1	PB2	PB4	LHLS	RHLS	PCAV
10.322	-1.388	421.09700	-.54340	-.54130	-.50400	-.51230	-.55820	-1.09780
10.306	1.603	420.46710	-.53750	-.53100	-.49260	-.50370	-.54880	-1.09650
10.302	6.139	421.34260	-.53900	-.53160	-.49310	-.50430	-.54880	-1.09900
10.313	13.778	421.72090	-.56260	-.55430	-.51530	-.52750	-.57230	-1.12160
10.332	28.819	421.71780	-.52790	-.51930	-.48120	-.49520	-.53880	-1.10090
10.343	43.741	421.21900	-.52120	-.50890	-.47380	-.48840	-.53060	-1.08900
	GRADIENT	.00000	.00000	.00000	.00000	.00000	.00000	.00000

CA20 747/1 01 S1 ORBITER DATA (DGN109) (20 JAN 75)

REFERENCE DATA

SREF =	2690.0000 SQ.FT.	XMRP =	1109.0000 IN.XO		
LREF =	474.8100 IN.	YMRP =	.0000 IN.YO		
BREF =	936.6800 IN.	ZMRP =	375.0000 IN.ZO		
SCALE =	.0300				

PARAMETRIC DATA

ALPHAC =	4.000	BETAC =	.000
ELV-IB =	.000	ELV-OB =	3.000
ELEVON =	5.000	MACH =	.600
BETAO =	-5.000	PHI =	.000
DX =	10.000	DY =	.000

RUN NO. 834/ 0 RN/L = 3.28 GRADIENT INTERVAL = -1.00/ 4.00

ALPHAO	DZ	Q(PSF)	PB1	PB2	PB4	LHLS	RHLS	PCAV
14.694	.928	421.84220	-.52270	-.50120	-.48120	-.48480	-.53460	-1.07140
14.676	3.997	422.46230	-.52270	-.50370	-.48170	-.48780	-.52790	-1.08390
14.659	8.486	421.95910	-.51310	-.49400	-.47090	-.47810	-.51510	-1.06820
14.660	16.091	421.71460	-.50800	-.48880	-.46240	-.47200	-.50630	-1.07700
14.655	31.106	421.46980	-.51090	-.49210	-.46520	-.47500	-.50840	-1.10970
14.692	46.023	421.71940	-.51090	-.48950	-.46910	-.47300	-.50570	-1.11720
14.673	60.943	420.84840	-.48950	-.46480	-.44590	-.45300	-.48280	-1.13540
	GRADIENT	.20202	.00000	-.00081	-.00016	-.00098	.00218	-.00407

CA20 747/1 01 S1 ORBITER DATA (DGN110) (20 JAN 75)

REFERENCE DATA

SREF =	2690.0000 SQ.FT.	XMRP =	1109.0000 IN.XO		
LREF =	474.8100 IN.	YMRP =	.0000 IN.YO		
BREF =	936.6800 IN.	ZMRP =	375.0000 IN.ZO		
SCALE =	.0300				

PARAMETRIC DATA

ALPHAC =	8.000	BETAC =	.000
ELV-IB =	.000	ELV-OB =	3.000
ELEVON =	5.000	MACH =	.600
BETAO =	-5.000	PHI =	.000
DX =	10.000	DY =	.000

RUN NO. 840/ 0 RN/L = 3.28 GRADIENT INTERVAL = -1.00/ 4.00

ALPHAO	DZ	Q(PSF)	PB1	PB2	PB4	LHLS	RHLS	PCAV
10.304	-3.002	422.47020	-.54040	-.53550	-.52270	-.52320	-.55550	-1.16680
10.306	-.075	420.85140	-.53230	-.52320	-.51080	-.51100	-.54670	-1.17000
10.328	4.516	421.47660	-.54270	-.53360	-.52050	-.52080	-.55750	-1.17120
10.360	12.075	420.97640	-.54340	-.53550	-.52050	-.52020	-.55890	-1.15740
10.425	26.946	421.84690	-.55000	-.53880	-.52730	-.52570	-.56420	-1.17190
10.467	42.070	421.09360	-.54040	-.52710	-.51880	-.51780	-.55550	-1.15680
	GRADIENT	.00000	.00000	.00000	.00000	.00000	.00000	.00000

CA20 747/1 01 SI ORBITER DATA (DGN110) (20 JAN 75)

REFERENCE DATA

SREF =	2690.0000 SQ.FT.	XMRP =	1109.0000 IN.XO		
LREF =	474.8100 IN.	YMRP =	.0000 IN.YO		
BREF =	936.6800 IN.	ZMRP =	375.0000 IN.ZO		
SCALE =	.0300				

PARAMETRIC DATA

ALPHAC =	8.000	BETAC =	.000
ELV-IB =	.000	ELV-OB =	3.000
ELEVON =	5.000	MACH =	.600
BETAC =	-5.000	PHI =	.000
DX =	10.000	DY =	.000

RUN NO. 837/ 0 RN/L = 3.29 GRADIENT INTERVAL = -1.00/ 4.00

ALPHAO	DZ	Q(PSF)	PB1	PB2	PB4	LHLS	RHLS	PCAV
14.301	-2.363	421.47810	-.49470	-.48110	-.47780	-.47010	-.51040	-1.12350
14.539	-1.012	421.72560	-.49610	-.48230	-.47950	-.47200	-.51170	-1.12290
14.492	1.816	421.72090	-.51240	-.49660	-.49200	-.48600	-.52120	-1.14740
14.537	2.114	422.46960	-.51830	-.50240	-.49770	-.49090	-.52650	-1.15430
14.547	6.572	422.59600	-.51980	-.50240	-.49480	-.49030	-.52520	-1.14670
14.576	14.073	421.47360	-.50650	-.48880	-.47780	-.47620	-.51040	-1.13360
14.612	29.194	421.72410	-.52860	-.50890	-.50000	-.49760	-.52990	-1.16870
14.641	44.237	422.21990	-.51750	-.49470	-.49090	-.48780	-.51710	-1.16060
14.651	58.932	421.47810	-.51090	-.48430	-.48460	-.47930	-.50700	-1.20200
	GRADIENT	2.50769	-.01979	-.01945	-.01912	-.01643	-.01777	-.02314

CA20 747/1 01 SI ORBITER DATA (DGN111) (20 JAN 75)

REFERENCE DATA

SREF =	2690.0000 SQ.FT.	XMRP =	1109.0000 IN.XO		
LREF =	474.8100 IN.	YMRP =	.0000 IN.YO		
BREF =	936.6800 IN.	ZMRP =	375.0000 IN.ZO		
SCALE =	.0300				

PARAMETRIC DATA

ALPHAC =	4.000	BETAC =	.000
ELV-IB =	.000	ELV-OB =	3.000
ELEVON =	5.000	MACH =	.600
BETAC =	-5.000	PHI =	.000
DX =	.000	DY =	10.000

RUN NO. 843/ 0 RN/L = 3.33 GRADIENT INTERVAL = -1.00/ 4.00

ALPHAO	DZ	Q(PSF)	PB1	PB2	PB4	LHLS	RHLS	PCAV
10.446	-.843	422.19740	-.51820	-.50440	-.50000	-.49460	-.53600	-1.74980
10.429	2.180	421.19740	-.51010	-.49270	-.48690	-.48120	-.52990	-1.78120
10.422	6.658	421.07390	-.50860	-.48950	-.48290	-.47630	-.52450	-1.84590
10.430	14.218	420.94580	-.54410	-.52510	-.51820	-.50990	-.55820	-1.98600
10.443	29.284	422.44130	-.53150	-.51930	-.50280	-.49390	-.54400	-2.08770
10.450	44.292	421.81960	-.51750	-.51020	-.48570	-.48790	-.53330	-2.17690
	GRADIENT	-.33083	.00268	.00387	.00433	.00443	.00202	-.01039

ORIGINAL PAGE IS OF POOR QUALITY

CA20 747/1 01 SI ORBITER DATA (DGN1121 (20 JAN 75)

REFERENCE DATA

SREF =	2690.0000 SQ.FT.	XMRP =	1109.0000 IN.XO		
LREF =	474.8100 IN.	YMRP =	.0000 IN.YO		
BREF =	936.6800 IN.	ZMRP =	375.0000 IN.ZO		
SCALE =	.0300				

PARAMETRIC DATA

ALPHAC =	4.000	BETAC =	.000
ELV-IB =	.000	ELV-OB =	3.000
ELEVON =	5.000	MACH =	.600
BETAO =	-5.000	PHI =	.000
DX =	10.000	DY =	10.000

RUN NO. 818/ 0 RN/L = 3.27 GRADIENT INTERVAL = -1.00/ 4.00

ALPHAO	DZ	Q(PSF)	PB1	PB2	PB4	LHLS	RHLS	PCAV
10.351	-1.302	421.35330	-.49610	-.47780	-.45720	-.46410	-.50050	-1.06180
10.339	1.671	422.97090	-.52120	-.50110	-.48050	-.48670	-.52040	-1.09200
10.338	6.235	422.95930	-.52270	-.50310	-.48110	-.48730	-.52110	-1.09820
10.344	13.633	422.84500	-.53080	-.51280	-.49020	-.49770	-.52920	-1.09700
10.363	28.774	421.97620	-.53010	-.51480	-.49070	-.50070	-.53120	-1.12150
10.378	43.866	422.59640	-.53160	-.51670	-.49250	-.50380	-.53390	-1.13590
	GRADIENT	.00000	.00000	.00000	.00000	.00000	.00000	.00000

RUN NO. 821/ 0 RN/L = 3.24 GRADIENT INTERVAL = -1.00/ 4.00

ALPHAO	DZ	Q(PSF)	PB1	PB2	PB4	LHLS	RHLS	PCAV
14.674	1.871	421.09970	-.47840	-.44990	-.45720	-.45310	-.47260	-1.04360
14.654	4.988	422.34460	-.51680	-.48750	-.49310	-.49150	-.50700	-1.08320
14.651	9.491	421.34730	-.49760	-.46810	-.47880	-.47260	-.48610	-1.05970
14.654	16.765	421.97310	-.47910	-.44670	-.45890	-.45190	-.46390	-1.07000
14.662	31.845	421.22520	-.47400	-.44080	-.45540	-.44700	-.45850	-1.11520
14.672	46.937	421.72390	-.47250	-.44020	-.45600	-.44590	-.45710	-1.17170
14.669	61.681	421.34860	-.47840	-.44470	-.46170	-.45120	-.46260	-1.20810
	GRADIENT	.00000	.00000	.00000	.00000	.00000	.00000	.00000

CA20 747/1 01 SI ORBITER DATA (DGN113) (20 JAN 75)

REFERENCE DATA

SREF =	2690.0000 SQ.FT.	XMRP =	1109.0000 IN.XO
LREF =	474.8100 IN.	YMRP =	.0000 IN.YO
BREF =	936.6800 IN.	ZMRP =	375.0000 IN.ZO
SCALE =	.0300		

PARAMETRIC DATA

ALPHAC =	8.000	BETAC =	.000
ELV-1B =	.000	ELV-OB =	3.000
ELEVON =	5.000	MACH =	.600
BETAO =	-5.000	PHI =	.000
DX =	.000	DY =	10.000

RUN NO. 846/ 0 RN/L = 3.27 GRADIENT INTERVAL = -1.00/ 4.00

ALPHAO	DZ	Q(PSF)	PB1	PB2	PB4	LHLS	RHLS	PCAV
14.663	-.234	420.82230	-.55000	-.52250	-.50510	-.50680	-.55680	-2.07700
14.664	2.831	421.07540	-.55740	-.52450	-.50680	-.50930	-.56090	-2.06450
14.673	7.169	421.44750	-.56330	-.52640	-.50910	-.51170	-.55690	-2.06130
14.695	14.825	421.82430	-.55880	-.52060	-.50510	-.50620	-.55080	-2.05630
14.718	29.804	420.69570	-.55000	-.51020	-.49710	-.49770	-.54000	-2.08210
14.736	44.793	421.82120	-.51970	-.47780	-.46470	-.46530	-.50630	-2.11280
14.745	59.569	421.69680	-.52490	-.48170	-.46810	-.46770	-.51310	-2.14170
	GRADIENT	.08258	-.00241	-.00065	-.00055	-.00082	-.00134	.00408

CA20 747/1 01 SI ORBITER DATA (DGN134) (28 AUG 75)

REFERENCE DATA

SREF =	2690.0000 SQ.FT.	XMRP =	1109.0000 IN.XO
LREF =	474.8100 IN.	YMRP =	.0000 IN.YO
BREF =	936.6800 IN.	ZMRP =	375.0000 IN.ZO
SCALE =	.0300		

PARAMETRIC DATA

ALPHAC =	8.000	BETAC =	.000
ELV-1B =	.000	ELV-OB =	3.000
ELEVON =	5.000	MACH =	.600
BETAO =	-5.000	PHI =	.000
DX =	10.000	DY =	10.000

RUN NO. 827/ 0 RN/L = 3.23 GRADIENT INTERVAL = -1.00/ 4.00

ALPHAO	DZ	Q(PSF)	PB1	PB2	PB4	LHLS	RHLS	PCAV
10.123	-2.709	420.96140	-.51390	-.49790	-.49940	-.49330	-.52650	-1.12850
10.130	.522	420.46710	-.51460	-.49790	-.49940	-.49270	-.52380	-1.12660
10.153	4.882	420.71430	-.51900	-.50240	-.50340	-.49700	-.52790	-1.12540
10.189	12.431	421.83590	-.53380	-.52000	-.51820	-.51290	-.54340	-1.12920
10.262	27.432	421.33960	-.50720	-.49270	-.49310	-.48780	-.51850	-1.12160
10.293	42.263	422.08610	-.53910	-.51610	-.51820	-.51350	-.54270	-1.15930
	GRADIENT	.00000	.00000	.00000	.00000	.00000	.00000	.00000

CA20 747/1 01 S1 ORBITER DATA (DGNI14) (28 AUG 75)

REFERENCE DATA

SREF =	2690.0000 SQ.FT.	XMRP =	1109.0000 IN.XO		
LREF =	474.8100 IN.	YMRP =	.0000 IN.YO		
BREF =	936.6800 IN.	ZMRP =	375.0000 IN.ZO		
SCALE =	.0300				

PARAMETRIC DATA

ALPHAC =	8.000	BETAC =	.000
ELV-IB =	.000	ELV-OB =	3.000
ELEVON =	5.000	MACH =	.600
BETAO =	-5.000	PHI =	.000
DX =	10.000	DY =	10.000

RUN NO. 824/ 0 RN/L = 3.23 GRADIENT INTERVAL = -1.00/ 4.00

ALPHAO	DZ	Q(PSF)	PB1	PB2	PB4	LHLS	RHLS	PCAV
14.536	-.449	420.84840	-.48060	-.45580	-.45900	-.45790	-.48010	-1.06760
14.541	2.724	421.47510	-.50800	-.48040	-.48460	-.48360	-.50360	-1.09900
14.551	7.181	420.72330	-.50280	-.47780	-.48230	-.47990	-.49960	-1.07330
14.577	14.625	421.98650	-.51390	-.48620	-.49430	-.48970	-.50630	-1.09150
14.616	29.549	420.46710	-.50280	-.47330	-.48350	-.47930	-.49350	-1.12660
14.642	44.653	422.46230	-.49470	-.46610	-.47550	-.47140	-.48480	-1.17000
14.647	59.369	421.34710	-.47770	-.44800	-.45780	-.45240	-.46800	-1.19320
	GRADIENT	.19752	-.00864	-.00775	-.00807	-.00810	-.00741	-.00674

CA20 747/1 01 S1 ORBITER DATA (DGNI15) (20 JAN 75)

REFERENCE DATA

SREF =	2690.0000 SQ.FT.	XMRP =	1109.0000 IN.XO		
LREF =	474.8100 IN.	YMRP =	.0000 IN.YO		
BREF =	936.6800 IN.	ZMRP =	375.0000 IN.ZO		
SCALE =	.0300				

PARAMETRIC DATA

ALPHAC =	4.000	BETAC =	5.000
ELV-IB =	.000	ELV-OB =	3.000
ELEVON =	5.000	MACH =	.600
BETAO =	-5.000	PHI =	.000
DX =	10.000	DY =	.000

RUN NO. 832/ 0 RN/L = 3.26 GRADIENT INTERVAL = -1.00/ 4.00

ALPHAO	DZ	Q(PSF)	PB1	PB2	PB4	LHLS	RHLS	PCAV
10.326	-1.459	420.59520	-.56260	-.55370	-.51880	-.53240	-.58310	-1.08960
10.310	1.577	421.09400	-.53530	-.52320	-.48860	-.50370	-.55010	-1.08140
10.308	6.160	421.84060	-.52860	-.51610	-.48060	-.49640	-.54000	-1.08140
10.316	13.701	422.09090	-.55450	-.54070	-.50680	-.52080	-.56420	-1.10910
10.331	28.714	422.58970	-.54040	-.52640	-.49260	-.50740	-.54940	-1.10660
10.344	43.808	421.96650	-.52710	-.51280	-.48000	-.49520	-.53660	-1.08830
	GRADIENT	.00000	.00000	.00000	.00000	.00000	.00000	.00000

CA20 747/1 01 SI ORBITER DATA (DGN115) (20 JAN 75)

REFERENCE DATA

SREF =	2690.0000 SQ.FT.	XMRP =	1109.0000 IN.XO
LREF =	474.8100 IN.	YMRP =	.0000 IN.YO
BREF =	936.6800 IN.	ZMRP =	375.0000 IN.ZO
SCALE =	.0300		

PARAMETRIC DATA

ALPHAC =	4.000	BETAC =	5.000
ELV-IB =	.000	ELV-OB =	3.000
ELEVON =	5.000	MACH =	.600
BETAO =	-5.000	PHI =	.000
DX =	10.000	DY =	.000

RUN NO. 833/ 0 RN/L = 3.28 GRADIENT INTERVAL = -1.00/ 4.00

ALPHAO	DZ	Q(PSF)	PB1	PB2	PB4	LHLS	RHLS	PCAV
14.703	.481	421.47360	-.53080	-.51480	-.49540	-.50250	-.53070	-1.05630
14.674	3.583	420.97490	-.52570	-.50370	-.48290	-.49030	-.53130	-1.07200
14.669	7.765	421.59970	-.52710	-.50630	-.48350	-.49210	-.52380	-1.07010
14.666	15.725	422.22150	-.52270	-.50310	-.47610	-.48660	-.52320	-1.07890
14.665	30.510	421.22200	-.51310	-.49340	-.46640	-.47620	-.50900	-1.07770
14.670	45.572	420.59970	-.50060	-.47850	-.45560	-.46460	-.49560	-1.07200
14.674	60.497	421.22050	-.50280	-.47780	-.46070	-.46650	-.49490	-1.13100
	GRADIENT		-.16076	.00164	.00359	.00403	.00393	.00239	-.00506

CA20 747/1 01 SI ORBITER DATA (DGN116) (20 JAN 75)

REFERENCE DATA

SREF =	2690.0000 SQ.FT.	XMRP =	1109.0000 IN.XO
LREF =	474.8100 IN.	YMRP =	.0000 IN.YO
BREF =	936.6800 IN.	ZMRP =	375.0000 IN.ZO
SCALE =	.0300		

PARAMETRIC DATA

ALPHAC =	8.000	BETAC =	5.000
ELV-IB =	.000	ELV-OB =	3.000
ELEVON =	5.000	MACH =	.600
BETAO =	-5.000	PHI =	.000
DX =	10.000	DY =	.000

RUN NO. 839/ 0 RN/L = 3.26 GRADIENT INTERVAL = -1.00/ 4.00

ALPHAO	DZ	Q(PSF)	PB1	PB2	PB4	LHLS	RHLS	PCAV
10.294	-2.738	421.22660	-.52050	-.51220	-.50220	-.50550	-.54070	-1.15990
10.306	.352	421.59970	-.53530	-.52510	-.51360	-.51650	-.55010	-1.17440
10.320	3.098	421.47360	-.54270	-.53100	-.51990	-.52200	-.55680	-1.17380
10.367	12.333	422.21830	-.55740	-.54590	-.53300	-.53480	-.57370	-1.16680
10.428	27.414	420.97340	-.54340	-.53030	-.52050	-.52080	-.55890	-1.15490
10.473	42.599	422.21830	-.52640	-.50960	-.50280	-.50310	-.54000	-1.13980
	GRADIENT		-.04592	-.00269	-.00215	-.00229	-.00200	-.00244	.00022

ORIGINAL PAGE IS
OF POOR QUALITY

CA20 747/1 01 SI ORBITER DATA (DGN116) (20 JAN 75)

REFERENCE DATA

SREF =	2690.0000 SQ.FT.	XMRP =	1109.0000 IN.XO
LREF =	474.8100 IN.	YMRP =	.0000 IN.YO
BREF =	936.6800 IN.	ZMRP =	375.0000 IN.ZO
SCALE =	.0300		

PARAMETRIC DATA

ALPHAC =	8.000	BETAC =	5.000
ELV-IB =	.000	ELV-OB =	3.000
ELEVON =	5.000	MACH =	.600
BETAO =	-5.000	PHI =	.000
DX =	10.000	DY =	.000

RUN NO. 838/ 0 RN/L = 3.26 GRADIENT INTERVAL = -1.00/ 4.00

ALPHAO	DZ	Q(PSF)	PB1	PB2	PB4	LHLS	RHLS	PCAV
14.538	-1.194	421.22660	-.53900	-.51930	-.52390	-.51780	-.55550	-1.15300
14.540	1.941	421.10300	-.53600	-.51350	-.51710	-.51160	-.54610	-1.15990
14.553	6.274	420.97490	-.53600	-.50960	-.51250	-.50920	-.54140	-1.15300
14.577	13.736	421.10450	-.52940	-.50310	-.50450	-.50130	-.53190	-1.14740
14.613	28.832	421.22660	-.51310	-.48490	-.48690	-.48360	-.51170	-1.13800
14.640	43.855	422.09870	-.51830	-.48560	-.49940	-.48840	-.51240	-1.14740
14.651	58.746	422.47020	-.50430	-.47130	-.48350	-.47440	-.49830	-1.18320
	GRADIENT	.00000	.00000	.00000	.00000	.00000	.00000	.00000

CA20 747/1 01 SI ORBITER DATA (DGN117) (20 JAN 75)

REFERENCE DATA

SREF =	2690.0000 SQ.FT.	XMRP =	1109.0000 IN.XO
LREF =	474.8100 IN.	YMRP =	.0000 IN.YO
BREF =	936.6800 IN.	ZMRP =	375.0000 IN.ZO
SCALE =	.0300		

PARAMETRIC DATA

ALPHAC =	4.000	BETAC =	5.000
ELV-IB =	.000	ELV-OB =	3.000
ELEVON =	5.000	MACH =	.600
BETAO =	-5.000	PHI =	.000
DX =	.000	DY =	10.000

RUN NO. 845/ 0 RN/L = 3.29 GRADIENT INTERVAL = -1.00/ 4.00

ALPHAO	DZ	Q(PSF)	PB1	PB2	PB4	LHLS	RHLS	PCAV
10.498	-.806	422.19899	-.50720	-.48750	-.47030	-.47450	-.55080	-2.10340
10.467	2.237	421.44900	-.50940	-.48750	-.46810	-.47380	-.53190	-2.13170
10.441	6.513	420.82380	-.51600	-.48620	-.46470	-.47260	-.53130	-2.14550
10.439	14.233	422.69300	-.54550	-.51740	-.49370	-.50250	-.55410	-2.19760
10.446	29.130	421.57240	-.53820	-.51610	-.48860	-.49930	-.54270	-2.22900
10.455	44.219	421.44750	-.53150	-.51480	-.48400	-.49540	-.54140	-2.25790
	GRADIENT	-.23656	-.00070	.00000	.00070	.00022	.00601	-.00900

CA20 747/1 01 S1 ORBITER DATA (DGN118) (20 JAN 75)

REFERENCE DATA

SREF = 2690.0000 SQ.FT. XMRP = 1109.0000 IN.XO
LREF = 474.8100 IN. YMRP = .0000 IN.YO
BREF = 936.6800 IN. ZMRP = 375.0000 IN.ZO
SCALE = .0300

PARAMETRIC DATA

ALPHAC =	4.000	BETAC =	5.000
ELV-IB =	.000	ELV-OB =	3.000
ELEVON =	5.000	MACH =	.600
BETAO =	-5.000	PHI =	.000
DX =	10.000	DY =	10.000

RUN NO. 817/ 0 RN/L = 3.28 GRADIENT INTERVAL = -1.00/ 4.00

ALPHAO	DZ	Q(PSF)	PB1	PB2	PB4	LHLS	RHLS	PCAV
10.387	-1.428	422.46890	-.49910	-.49720	-.47710	-.47450	-.51230	-1.09260
10.368	1.603	421.85180	-.49980	-.48560	-.46570	-.46590	-.49480	-1.08070
10.354	6.192	421.47530	-.50130	-.48490	-.46230	-.46470	-.50020	-1.07310
10.352	13.627	422.59320	-.53010	-.51600	-.49020	-.49340	-.52650	-1.08880
10.368	28.854	421.97310	-.52710	-.51670	-.48950	-.49400	-.52580	-1.10520
10.375	43.802	421.34680	-.51680	-.50630	-.47760	-.48670	-.51770	-1.10390
	GRADIENT	.00000	.00000	.00000	.00000	.00000	.00000	.00000

RUN NO. 822/ 0 RN/L = 3.25 GRADIENT INTERVAL = -1.00/ 4.00

ALPHAO	DZ	Q(PSF)	PB1	PB2	PB4	LHLS	RHLS	PCAV
14.717	1.874	421.59740	-.49100	-.46350	-.47880	-.47020	-.49150	-1.08630
14.688	4.769	421.47380	-.49020	-.46220	-.47590	-.46770	-.48680	-1.07440
14.674	9.382	421.84560	-.49170	-.46220	-.47590	-.46710	-.48410	-1.05930
14.665	16.975	421.84400	-.48430	-.45250	-.46800	-.45800	-.47190	-1.06180
14.668	31.950	420.84400	-.46950	-.43890	-.45260	-.44450	-.45590	-1.09140
14.673	46.749	422.08640	-.49100	-.46160	-.47590	-.46410	-.47670	-1.15980
14.669	61.783	422.08640	-.49380	-.46290	-.47820	-.46530	-.47870	-1.20690
	GRADIENT	.00000	.00000	.00000	.00000	.00000	.00000	.00000

CA20 747/1 01 S1 ORBITER DATA (DGN119) (20 JAN 75)

REFERENCE DATA

SREF =	2690.0000 SQ.FT.	XMRP =	1109.0000 IN.XO
LREF =	474.8100 IN.	YMRP =	.0000 IN.YO
BREF =	936.6800 IN.	ZMRP =	375.0000 IN.ZO
SCALE =	.0300		

PARAMETRIC DATA

ALPHAC =	8.000	GETAC =	5.000
ELV-IB =	.000	ELV-OB =	3.000
ELEVON =	5.000	MACH =	.600
GETAO =	-5.000	PHI =	.000
DX =	10.000	DY =	10.000

RUN NO. 826/ 0 RN/L = 3.24 GRADIENT INTERVAL = -1.00/ 4.00

ALPHAO	DZ	Q(PSF)	PB1	PB2	PB4	LHLS	RHLS	PCAV
10.232	-3.159	421.09100	-.48060	-.46550	-.47210	-.46460	-.49220	-1.12850
10.221	-.170	420.84390	-.49760	-.47590	-.48060	-.47260	-.50160	-1.12480
10.228	4.274	422.21360	-.52050	-.49860	-.50220	-.49330	-.52720	-1.14230
10.086	8.076	422.46540	-.52710	-.50760	-.50910	-.50190	-.53330	-1.13480
10.089	10.921	421.83900	-.52710	-.50830	-.50910	-.50130	-.53260	-1.12100
10.159	26.257	421.46900	-.53080	-.51540	-.51480	-.50860	-.53870	-1.12920
10.305	41.630	421.33960	-.52420	-.50890	-.50970	-.50490	-.53390	-1.13540
	GRADIENT	.00000	.00000	.00000	.00000	.00000	.00000	.00000

RUN NO. 825/ 0 RN/L = 3.22 GRADIENT INTERVAL = -1.00/ 4.00

ALPHAO	DZ	Q(PSF)	PB1	PB2	PB4	LHLS	RHLS	PCAV
14.586	-.647	420.59370	-.49320	-.47260	-.48400	-.47870	-.50360	-1.10280
14.574	2.288	420.46960	-.49980	-.47520	-.48630	-.48170	-.50300	-1.09900
14.572	6.896	421.96490	-.51750	-.48920	-.50050	-.49590	-.51440	-1.10280
14.589	14.523	421.22050	-.50500	-.47520	-.48860	-.48300	-.49930	-1.08020
14.622	29.445	421.46590	-.50350	-.47390	-.48920	-.48170	-.49490	-1.11660
14.641	44.416	421.46430	-.49690	-.46680	-.48120	-.47440	-.48750	-1.14230
14.651	59.282	421.84080	-.48060	-.44930	-.46410	-.45670	-.47000	-1.18440
	GRADIENT	-.04263	-.00225	-.00089	-.00078	-.00102	.00020	.00129

CA20 747/1 01 S1 ORBITER DATA (DGN120) (20 JAN 75)

REFERENCE DATA

SREF =	2690.0000 SQ.FT.	XMRP =	1109.0000 IN.XO
LREF =	474.8100 IN.	YMRP =	.0000 IN.YO
BREF =	936.6800 IN.	ZMRP =	375.0000 IN.ZO
SCALE =	.0300		

PARAMETRIC DATA

ALPHAC =	4.000	BETAC =	-5.000
ELV-IB =	.000	ELV-OB =	.000
ELEVON =	5.000	MACH =	.600
BETAO =	-5.000	PHI =	.000
DX =	.000	DY =	10.000

RUN NO. 765/ 0 RN/L = 3.26 GRADIENT INTERVAL = -1.00/ 4.00

ALPHAO	DZ	Q(PSF)	PB1	PB2	PB4	LHLS	RHLS	PCAV
10.515	-1.996	424.52560	-.55590	-.55370	-.53350	-.54280	-.54740	.58220
10.489	1.101	423.16160	-.51310	-.51160	-.49020	-.50070	-.50500	.62240
10.487	5.844	424.15580	-.53450	-.53300	-.51130	-.52090	-.52650	.59850
10.491	13.003	423.40720	-.53300	-.53170	-.50900	-.51840	-.52590	.61040
10.505	28.256	423.90390	-.55070	-.54980	-.52610	-.53430	-.54340	.60100
10.512	43.057	424.64510	-.55440	-.55700	-.53010	-.54100	-.54980	.62420
10.515	46.935	423.40270	-.54260	-.54530	-.51870	-.53000	-.53730	.63680
	GRADIENT	.00000	.00000	.00000	.00000	.00000	.00000	.00000

RUN NO. 768/ 0 RN/L = 3.24 GRADIENT INTERVAL = -1.00/ 4.00

ALPHAO	DZ	Q(PSF)	PB1	PB2	PB4	LHLS	RHL	PCAV
14.817	.070	423.90390	-.54630	-.53880	-.53520	-.53920	-.54140	.89110
14.790	3.179	424.15100	-.54700	-.53880	-.53410	-.54040	-.54070	.87920
14.781	7.513	424.52240	-.54410	-.53560	-.53180	-.53920	-.53730	.87290
14.780	9.056	424.64830	-.54330	-.53560	-.53240	-.53960	-.53870	.86790
14.776	15.044	423.02910	-.51970	-.51160	-.50960	-.51540	-.51510	.85530
14.778	30.013	423.28070	-.50490	-.49470	-.49480	-.49890	-.49890	.85470
14.777	44.971	423.77800	-.49460	-.48300	-.48450	-.48730	-.48950	.95600
14.777	60.036	424.39650	-.50120	-.48820	-.48300	-.48910	-.49490	.87680
	GRADIENT	.07948	-.00023	.00000	.00035	-.00039	.00023	-.00383

ORIGINAL PAGE IS
OF POOR QUALITY

DATE 01 DEC 75 TABULATED SOURCE DATA - CA20

CA20 747/1 01 S1 ORBITER DATA (DGN121) (20 JAN 75)

REFERENCE DATA

SREF =	2690.0000 SQ.FT.	XMRP =	1109.0000 IN.XO		
LREF =	474.8100 IN.	YMRP =	.0000 IN.YO		
BREF =	935.6800 IN.	ZMRP =	375.0000 IN.ZO		
SCALE =	.0300				

PARAMETRIC DATA

ALPHAC =	8.000	BETAC =	-5.000
ELV-IB =	.000	ELV-OB =	.000
ELEVON =	5.000	MACH =	.600
BETAO =	-5.000	PHI =	.000
DX =	.000	DY =	10.000

RUN NO. 766/ 0 RN/L = 3.25 GRADIENT INTERVAL = -1.00/ 4.00

ALPHAO	DZ	Q(PSF)	PB1	PB2	PB4	LHLS	RHLS	PCAV
10.296	-3.648	423.69280	-.57360	-.56930	-.55000	-.55810	-.56490	.52750
10.312	-.567	424.51450	-.57290	-.56930	-.55060	-.55910	-.55490	.52440
10.352	4.042	423.68980	-.56030	-.55700	-.52910	-.54590	-.55280	.53000
10.388	11.603	423.68930	-.56990	-.55730	-.54720	-.55510	-.56280	.53510
10.447	26.756	422.89350	-.56180	-.55210	-.52860	-.54890	-.55550	.56460
10.474	41.500	423.76390	-.56690	-.56930	-.54490	-.55630	-.55290	.57590
10.480	46.724	423.26870	-.56030	-.55210	-.53810	-.55020	-.55550	.59790
	GRADIENT	.00000	.00000	.00000	.00000	.00000	.00000	.00000

RUN NO. 767/ 0 RN/L = 3.24 GRADIENT INTERVAL = -1.00/ 4.00

ALPHAO	DZ	Q(PSF)	PB1	PB2	PB4	LHLS	RHLS	PCAV
14.680	-1.558	424.14160	-.53080	-.52450	-.51760	-.52270	-.52650	.85030
14.690	1.597	423.64420	-.53080	-.52520	-.51810	-.52390	-.5265	.84720
14.698	5.926	423.52300	-.55960	-.55370	-.54660	-.55320	-.55550	.80390
14.707	13.492	424.01730	-.54630	-.53820	-.52890	-.53980	-.54140	.79320
14.735	28.283	423.02310	-.52930	-.52000	-.51590	-.52090	-.52450	.80760
14.751	43.438	423.14510	-.49980	-.48820	-.48510	-.48910	-.49420	.84030
14.755	58.164	424.01570	-.51160	-.49930	-.49540	-.49830	-.50570	.85030
	GRADIENT	.00000	.00000	.00000	.00000	.00000	.00000	.00000

DATE 01 DEC 75 TABULATED SOURCE DATA - CA20

CA20 747/1 01 S1 ORBITER DATA (DGN122) (20 JAN 75)

REFERENCE DATA

SREF =	2690.0000 SQ.FT.	XMRP =	1109.0000 IN.XO		
LREF =	474.8100 IN.	YMRP =	.0000 IN.YO		
BREF =	935.6900 IN.	ZMRP =	375.0000 IN.ZO		
SCALE =	.0300				

PARAMETRIC DATA

ALPHAC =	4.000	BETAC =	.000
ELV-IB =	.000	ELV-OB =	.000
ELEVON =	5.000	MACH =	.600
BETAO =	-5.000	PHI =	.000
DX =	.000	DY =	10.000

RUN NO. 761/ 0 RN/L = 3.32 GRADIENT INTERVAL = -1.00/ 4.00

ALPHAO	DZ	Q(PSF)	PB1	PB2	PB4	LHLS	RHLS	PCAV
10.533	-1.760	424.04560	-.50050	-.51090	-.50100	-.48300	-.49420	.49330
10.518	1.242	423.79680	-.48940	-.50060	-.48510	-.47080	-.48280	.51060
10.511	5.718	424.04720	-.49330	-.50360	-.49020	-.47870	-.49090	.52000
10.517	13.048	423.29870	-.53450	-.54590	-.52150	-.51280	-.52650	.48300
10.529	28.455	423.79680	-.53300	-.54590	-.51410	-.50930	-.52450	.51310
10.535	43.071	424.66410	-.53150	-.54660	-.50930	-.51050	-.52380	.53510
10.533	47.085	424.53030	-.53820	-.55240	-.51410	-.51720	-.52990	.54200
	GRADIENT	.00000	.00000	.00000	.00000	.00000	.00000	.00000

RUN NO. 764/ 0 RN/L = 3.26 GRADIENT INTERVAL = -1.00/ 4.00

ALPHAO	DZ	Q(PSF)	PB1	PB2	PB4	LHLS	RHLS	PCAV
14.817	.178	424.15420	-.55000	-.54400	-.52380	-.53670	-.54200	.80640
14.797	3.067	424.39810	-.56180	-.55760	-.53810	-.55140	-.55550	.78560
14.787	7.591	422.90550	-.51160	-.50570	-.48800	-.50130	-.50570	.83400
14.780	15.133	423.53070	-.54920	-.54330	-.52720	-.53920	-.54400	.77250
14.773	29.555	422.90100	-.51530	-.50770	-.49360	-.50550	-.51040	.79320
14.775	45.069	423.65210	-.49300	-.48890	-.47600	-.48730	-.49290	.75380
14.771	60.069	423.90080	-.50120	-.49080	-.47710	-.48730	-.49420	.81830
	GRADIENT	.08442	-.00408	-.00471	-.00495	-.00509	-.00467	-.00720

CA20 747/1 01 S1 ORBITER DATA (DGN123) (20 JAN 75)

REFERENCE DATA

SREF = 2690.0000 SQ.FT. XMRP = 1109.0000 IN.XO
LREF = 474.8100 IN. YMRP = .0000 IN.YO
EREF = 936.6900 IN. ZMRP = 375.0000 IN.ZO
SCALE = .0300

PARAMETRIC DATA

ALPHAC =	8.000	BETAC =	.000
ELV-IB =	.000	ELV-OB =	.000
ELEVON =	5.000	MACH =	.600
BETAD =	-5.000	PHI =	.000
DX =	.000	DY =	10.000

RUN NO. 762/ 0 RN/L = 3.28 GRADIENT INTERVAL = -1.00/ 4.00

ALPHAO	DZ	Q(PSF)	PB1	PB2	PB4	LHLS	RHLS	PCAV
10.341	-3.606	423.91160	-.54550	-.55240	-.52150	-.52270	-.53530	.44090
10.346	-.403	423.16160	-.54780	-.55440	-.52330	-.52610	-.53870	.43770
10.375	5.542	423.78270	-.55220	-.55830	-.52610	-.52880	-.54340	.44150
10.411	11.472	423.77880	-.55740	-.56280	-.52840	-.53370	-.54810	.45720
10.469	26.651	422.77600	-.55140	-.55830	-.52040	-.52880	-.54340	.49550
10.496	41.561	422.89950	-.53890	-.54660	-.50730	-.51950	-.53130	.52750
10.503	46.845	423.90080	-.54110	-.54720	-.50850	-.52210	-.53330	.54700
	GRADIENT	.00000	.00000	.00000	.00000	.00000	.00000	.00000

RUN NO. 763/ 0 RN/L = 3.26 GRADIENT INTERVAL = -1.00/ 4.00

ALPHAO	DZ	Q(PSF)	PB1	PB2	PB4	LHLS	RHLS	PCAV
14.689	-1.516	424.52090	-.55960	-.55760	-.53580	-.54530	-.55550	.74170
14.691	2.914	423.89760	-.53890	-.53560	-.51300	-.52570	-.53460	.77060
14.699	7.487	423.40270	-.55000	-.54530	-.52330	-.53730	-.54470	.74670
14.711	13.631	422.90100	-.54330	-.53750	-.51760	-.53180	-.53870	.74730
14.742	28.443	423.52770	-.52190	-.51420	-.48540	-.50990	-.51580	.76930
14.754	43.346	423.77640	-.49930	-.48950	-.47200	-.48420	-.49150	.78820
14.753	58.323	423.77010	-.50790	-.49800	-.48060	-.49030	-.50030	.79630
	GRADIENT	.00000	.00000	.00000	.00000	.00000	.00000	.00000

CA20 747/1 01 SI ORBITER DATA (DGN1241 (20 JAN 75)

ORIGINAL PAGE IS OF POOR QUALITY

REFERENCE DATA

SREF =	2690.0000 SQ.FT.	XMRP =	1109.0000 IN.XO		
LREF =	474.8100 IN.	YMRP =	.0000 IN.YO		
BREF =	936.6800 IN.	ZMRP =	375.0000 IN.ZO		
SCALE =	.0300				

PARAMETRIC DATA

ALPHAC =	4.000	BETAC =	5.000
ELV-IB =	.000	ELV-OB =	.000
ELEVON =	5.000	MACH =	.600
BETAO =	-5.000	PHI =	.000
DX =	.000	DY =	10.000

RUN NO. 769/ 0 RN/L = 3.24 GRADIENT INTERVAL = -1.00/ 4.00

ALPHAO	DZ	Q(PSF)	PB1	PB2	PB4	LHLS	RHLS	PCAV
10.561	-1.968	424.27700	-.49680	-.49540	-.49140	-.49030	-.49020	.59850
10.533	1.261	424.15420	-.50350	-.50180	-.49590	-.49640	-.49620	.60160
10.511	5.843	424.28010	-.52780	-.52650	-.51760	-.51960	-.52050	.58150
10.506	13.217	423.90240	-.52550	-.52260	-.51240	-.51540	-.51710	.59280
10.514	28.279	423.15560	-.55220	-.54790	-.53810	-.53920	-.54340	.59030
10.514	42.986	422.90850	-.51160	-.51160	-.49760	-.50130	-.50500	.66570
10.518	46.942	423.53520	-.55000	-.54980	-.53580	-.53980	-.54340	.63370
	GRADIENT	.00000	.00000	.00000	.00000	.00000	.00000	.00000

RUN NO. 772/ 0 RN/L = 3.23 GRADIENT INTERVAL = -1.00/ 4.00

ALPHAO	DZ	Q(PSF)	PB1	PB2	PB4	LHLS	RHLS	PCAV
14.954	.809	423.79370	-.50640	-.50060	-.50620	-.49950	-.50030	.87170
14.915	4.128	422.91750	-.53080	-.52580	-.53010	-.52570	-.52450	.85410
14.888	10.992	424.66090	-.52710	-.52070	-.52550	-.52150	-.52050	.86230
14.877	18.691	424.28480	-.51970	-.51090	-.51990	-.51540	-.51310	.85790
14.871	33.530	424.16050	-.50860	-.49860	-.50960	-.50310	-.50230	.85530
14.867	48.582	423.91020	-.48940	-.47660	-.48910	-.47890	-.48340	.87670
14.860	63.797	423.03660	-.47840	-.46360	-.47540	-.46470	-.47130	.90940
	GRADIENT	.00000	.00000	.00000	.00000	.00000	.00000	.00000

CA20 747/1 01 S1 ORBITER DATA (DGN125) (20 JAN 75)

REFERENCE DATA

SREF =	2690.0000 SQ.FT.	XMRP =	1109.0000 IN.XO		
LREF =	474.8100 IN.	YMRP =	.0000 IN.YO		
BREF =	938.6800 IN.	ZMRP =	375.0000 IN.ZO		
SCALE =	.0300				

PARAMETRIC DATA

ALPHAC =	8.000	BETAC =	5.000
ELV-IB =	.000	ELV-OB =	.000
ELEVON =	5.000	MACH =	.600
BETAO =	-5.000	PHI =	.000
DX =	.000	DY =	10.000

RUN NO. 770/ 0 RN/L = 3.23 GRADIENT INTERVAL = -1.00/ 4.00

ALPHAO	DZ	Q(PSF)	PB1	PB2	PB4	LHLS	RHLS	PCAV
10.389	-3.483	423.53070	-.50790	-.50510	-.50160	-.49890	-.50100	.52750
10.364	-.364	424.15260	-.53000	-.52710	-.52100	-.52020	-.52250	.52630
10.378	4.046	423.40270	-.53820	-.53620	-.52780	-.52680	-.53060	.52310
10.412	11.707	423.40120	-.55140	-.54850	-.53860	-.53920	-.54270	.52940
10.454	26.489	423.27920	-.55740	-.55440	-.54380	-.54470	-.54940	.55450
10.479	41.497	422.65240	-.54850	-.54660	-.53460	-.53670	-.54140	.56660
10.486	46.758	423.15110	-.55370	-.55370	-.54030	-.54470	-.54810	.60350
	GRADIENT	.00000	.00000	.00000	.00000	.00000	.00000	.00000

RUN NO. 771/ 0 RN/L = 3.23 GRADIENT INTERVAL = -1.00/ 4.00

ALPHAO	DZ	Q(PSF)	PB1	PB2	PB4	LHLS	RHLS	PCAV
14.823	-.884	423.41770	-.53890	-.53300	-.53520	-.53000	-.53060	.81640
14.797	1.955	424.28640	-.53890	-.53300	-.53580	-.53120	-.53190	.83530
14.791	6.399	423.66460	-.55740	-.54920	-.55340	-.55020	-.54940	.81580
14.798	14.059	424.53350	-.53670	-.52840	-.53410	-.53060	-.52920	.82210
14.819	28.947	423.66460	-.52120	-.51090	-.51640	-.51350	-.51370	.82710
14.842	43.761	424.04090	-.50490	-.49280	-.50100	-.49340	-.49930	.84150
14.847	59.029	423.66780	-.46500	-.46940	-.47770	-.46960	-.47810	.89550
	GRADIENT	.30595	.00000	.00000	-.00021	-.00042	-.00046	.00665

CA20 747/1 02 S1 ORBITER DATA (DGN126) (20 JAN 75)

REFERENCE DATA

SREF =	2690.0000 SQ.FT.	XMRP =	1109.0000 IN.XO
LREF =	474.8100 IN.	YMRP =	.0000 IN.YO
BREF =	936.6800 IN.	ZMRP =	375.0000 IN.ZO
SCALE =	.0300		

PARAMETRIC DATA

ALPHAC =	4.000	BETAC =	-5.000
ELV-IB =	.000	ELV-OB =	3.000
ELEVON =	5.000	MACH =	.600
BETAO =	.000	PHI =	.000
DX =	.000	DY =	.000

RUN NO. 656/ 0 RN/L = 3.29 GRADIENT INTERVAL = -1.00/ 4.00

ALPHAO	DZ	Q(PSF)	PB1	PB2	PB4	LHLS	RHLS	PCAV
10.466	-1.096	423.57880	-.30120	-.81220	-.77770	-.82660	-.30570	-.26250
10.459	2.127	422.33770	-.28490	-.77850	-.72930	-.79670	-.28950	-.24550
10.459	6.620	423.08290	-.28930	-.78830	-.74350	-.80580	-.29290	-.24800
10.464	14.115	422.96140	-.27680	-.78630	-.74290	-.80160	-.28070	-.23670
10.475	29.115	422.46280	-.26280	-.78180	-.74070	-.79060	-.26590	-.22290
10.481	44.160	422.58780	-.25690	-.77270	-.73550	-.78750	-.26050	-.21790
10.485	48.200	422.33920	-.25170	-.77149	-.73270	-.78200	-.25520	-.21220
	GRADIENT	.00000	.00000	.00000	.00000	.00000	.00000	.00000

CA20 747/1 02 S1 ORBITER DATA (DGN127) (20 JAN 75)

REFERENCE DATA

SREF =	2690.0000 SQ.FT.	XMRP =	1109.0000 IN.XO
LREF =	474.8100 IN.	YMRP =	.0000 IN.YO
BREF =	936.6800 IN.	ZMRP =	375.0000 IN.ZO
SCALE =	.0300		

PARAMETRIC DATA

ALPHAC =	4.000	BETAC =	-5.000
ELV-IB =	.000	ELV-OB =	3.000
ELEVON =	5.000	MACH =	.600
BETAO =	.000	PHI =	.000
DX =	10.000	DY =	.000

RUN NO. 657/ 0 RN/L = 3.34 GRADIENT INTERVAL = -1.00/ 4.00

ALPHAO	DZ	Q(PSF)	PB1	PB2	PB4	LHLS	RHLS	PCAV
10.433	-1.292	422.34670	-.24510	-.76350	-.74010	-.77470	-.25380	-.21730
10.431	1.807	422.34070	-.23100	-.74160	-.71050	-.75030	-.23970	-.20350
10.433	6.229	423.21200	-.23550	-.74680	-.71220	-.75460	-.24300	-.20600
10.444	14.070	423.21510	-.26280	-.77790	-.74070	-.78320	-.27200	-.23170
10.465	28.827	422.47170	-.22070	-.73770	-.70540	-.74480	-.22820	-.18960
10.477	43.949	422.59080	-.24140	-.75840	-.72700	-.76550	-.24780	-.20780
10.478	48.212	422.96590	-.24280	-.76490	-.72930	-.76800	-.24910	-.20910
	GRADIENT	.00000	.00000	.00000	.00000	.00000	.00000	.00000

CA20 747/1 02 SI ORBITER DATA (DGN128) (20 JAN 75)

REFERENCE DATA

SREF =	2690.0000 SQ.FT.	XMRP =	1109.0000 IN.XO		
LREF =	474.8100 IN.	YMRP =	.0000 IN.YO		
BREF =	936.6800 IN.	ZMRP =	375.0000 IN.ZO		
SCALE =	.0300				

PARAMETRIC DATA

ALPHAC =	4.000	BETAC =	-5.000
ELV-IB =	.000	ELV-OB =	3.000
ELEVON =	5.000	MACH =	.600
BETAO =	.000	PHI =	.000
DX =	20.000	DY =	.000

RUN NO. 669/ 0 RN/L = 3.32 GRADIENT INTERVAL = -1.00/ 4.00

ALPHAO	DZ	Q(PSF)	PB1	PB2	PB4	LHLS	RHLS	PCAV
10.339	-1.706	424.62460	-.82180	-.78650	-.78700	-.28030	-.25720	-.29840
10.333	1.490	423.62630	-.78630	-.74760	-.77900	-.25950	-.23700	-.27830
10.348	5.895	423.63070	-.77010	-.72940	-.77500	-.25340	-.23100	-.27200
10.360	13.450	423.74980	-.75610	-.72940	-.77100	-.24920	-.22690	-.26820
10.383	28.424	424.99450	-.74720	-.72100	-.76930	-.24370	-.22220	-.26380
10.396	43.434	424.12500	-.74060	-.71580	-.76870	-.24180	-.22020	-.26000
10.401	48.251	424.49710	-.73910	-.71520	-.76760	-.24240	-.22090	-.26000
	GRADIENT	.00000	.00000	.00000	.00000	.00000	.00000	.00000

CA20 747/1 02 SI ORBITER DATA (DGN129) (20 JAN 75)

REFERENCE DATA

SREF =	2690.0000 SQ.FT.	XMRP =	1109.0000 IN.XO		
LREF =	474.8100 IN.	YMRP =	.0000 IN.YO		
BREF =	936.6800 IN.	ZMRP =	375.0000 IN.ZO		
SCALE =	.0300				

PARAMETRIC DATA

ALPHAC =	4.000	BETAC =	.000
ELV-IB =	.000	ELV-OB =	3.000
ELEVON =	5.000	MACH =	.600
BETAO =	.000	PHI =	.000
DX =	.000	DY =	.000

RUN NO. 652/ 0 RN/L = 3.31 GRADIENT INTERVAL = -1.00/ 4.00

ALPHAO	DZ	Q(PSF)	PB1	PB2	PB4	LHLS	RHLS	PCAV
10.500	-.437	423.31690	-.27750	-.74220	-.66890	-.73620	-.28280	-.22480
10.491	2.659	422.69480	-.29160	-.75780	-.68770	-.75640	-.29560	-.23550
10.491	7.176	423.31750	-.26650	-.74870	-.68030	-.74420	-.27000	-.20910
10.496	14.694	422.31820	-.27830	-.77590	-.71160	-.76920	-.28070	-.21910
10.508	26.858	422.19020	-.27460	-.78570	-.72530	-.78510	-.27800	-.21730
10.510	29.527	422.31820	-.25240	-.75840	-.70820	-.76550	-.25520	-.19780
10.521	44.750	422.06960	-.24800	-.75780	-.70540	-.76250	-.25040	-.19340
10.524	48.090	423.81790	-.25420	-.77790	-.72870	-.78200	-.26790	-.20910
	GRADIENT	-.20062	-.00455	-.00504	-.00607	-.00652	-.00413	-.00346

CA20 747/1 02 S1 ORBITER DATA (DGN129) (20 JAN 75)

REFERENCE DATA

SREF =	2690.0000 SQ.FT.	XMRP =	1109.0000 IN.XO
LREF =	474.8100 IN.	YMRP =	.0000 IN.YO
BREF =	936.6800 IN.	ZMRP =	375.0000 IN.ZO
SCALE =	.0300		

PARAMETRIC DATA

ALPHAC =	4.000	BETAC =	.000
ELV-IB =	.000	ELV-OB =	3.000
ELEVON =	5.000	MACH =	.600
BETAO =	.000	PHI =	.000
DX =	.000	DY =	.000

RUN NO. 653/ 0 RN/L = 3.29 GRADIENT INTERVAL = -1.00/ 4.00

ALPHAO	DZ	Q(PSF)	PB1	PB2	PB4	LHLS	RHLS	PCAV
14.760	1.601	423.32220	-.27830	-.81420	-.75550	-.83450	-.28010	-.22540
14.750	4.801	423.07190	-.29970	-.83100	-.78170	-.84740	-.30360	-.24930
14.743	9.200	422.57280	-.27530	-.81740	-.75430	-.83270	-.27740	-.22480
14.738	16.514	421.95350	-.26870	-.82650	-.75550	-.85160	-.27130	-.21850
14.739	31.538	422.08010	-.27390	-.83880	-.78390	-.86440	-.27540	-.22480
14.741	46.575	422.82740	-.27680	-.84920	-.80500	-.87850	-.27870	-.22920
14.736	61.537	422.20360	-.25390	-.82720	-.79020	-.86440	-.25650	-.20970
	GRADIENT	.00000	.00000	.00000	.00000	.00000	.00000	.00000

CA20 747/1 02 S1 ORBITER DATA (DGN130) (20 JAN 75)

REFERENCE DATA

SREF =	2690.0000 SQ.FT.	XMRP =	1109.0000 IN.XO
LREF =	474.8100 IN.	YMRP =	.0000 IN.YO
BREF =	936.6800 IN.	ZMRP =	375.0000 IN.ZO
SCALE =	.0300		

PARAMETRIC DATA

ALPHAC =	4.000	BETAC =	.000
ELV-IB =	.000	ELV-OB =	3.000
ELEVON =	5.000	MACH =	.600
BETAO =	.000	PHI =	.000
DX =	10.000	DY =	.000

RUN NO. 661/ 0 RN/L = 3.30 GRADIENT INTERVAL = -1.00/ 4.00

ALPHAO	DZ	Q(PSF)	PB1	PB2	PB4	LHLS	RHLS	PCAV
10.416	-1.295	422.86490	-.24060	-.67610	-.62790	-.69780	-.24440	-.21100
10.413	1.696	423.24150	-.24060	-.68780	-.63190	-.70570	-.24510	-.21220
10.418	6.294	422.86790	-.23990	-.69880	-.66950	-.71850	-.24510	-.21160
10.427	13.796	422.36610	-.23690	-.71630	-.67350	-.73620	-.24170	-.20850
10.446	28.832	422.74130	-.23920	-.73640	-.71280	-.75920	-.24370	-.21040
10.459	43.886	422.99590	-.23840	-.73770	-.70940	-.76010	-.24300	-.20970
10.460	48.115	422.36910	-.23030	-.73700	-.70650	-.75590	-.23500	-.20410
	GRADIENT	.00000	.00000	.00000	.00000	.00000	.00000	.00000

CA20 747/1 02 S1 ORBITER DATA (DGN130) (20 JAN 75)

REFERENCE DATA

SREF =	2690.0000 SQ.FT.	XMRP =	1109.0000 IN.XO		
LREF =	474.8100 IN.	YMRP =	.0000 IN.YO		
BREF =	936.6800 IN.	ZMRP =	375.0000 IN.ZO		
SCALE =	.0300				

PARAMETRIC DATA

ALPHAC =	4.000	BETAC =	.000
ELV-IB =	.000	ELV-OB =	3.000
ELEVON =	5.000	MACH =	.600
BETAO =	.000	PHI =	.000
DX =	10.000	DY =	.000

RUN NO. 659/ 0 RN/L = 3.31 GRADIENT INTERVAL = -1.00/ 4.00

ALPHAO	DZ	Q(PSF)	PB1	PB2	PB4	LHLS	RHLS	PCAV
14.654	1.473	422.47770	-.23250	-.72470	-.67580	-.74910	-.23560	-.19530
14.652	4.559	422.97940	-.23840	-.72150	-.67920	-.74780	-.24170	-.20280
14.654	9.090	424.09340	-.25470	-.76230	-.70820	-.78450	-.25920	-.21850
14.654	16.527	422.60580	-.24430	-.77460	-.74240	-.80220	-.24980	-.20910
14.662	31.535	422.48070	-.26350	-.81350	-.75890	-.84490	-.26730	-.22860
14.669	46.582	423.97380	-.25910	-.82460	-.79530	-.85350	-.26320	-.22480
14.666	61.500	422.61330	-.24650	-.81220	-.78620	-.84190	-.25040	-.21220
	GRADIENT	.00000	.00000	.00000	.00000	.00000	.00000	.00000

CA20 747/1 02 S1 ORBITER DATA (DGN131) (20 JAN 75)

REFERENCE DATA

SREF =	2690.0000 SQ.FT.	XMRP =	1109.0000 IN.XO		
LREF =	474.8100 IN.	YMRP =	.0000 IN.YO		
BREF =	936.6800 IN.	ZMRP =	375.0000 IN.ZO		
SCALE =	.0300				

PARAMETRIC DATA

ALPHAC =	4.000	BETAC =	.000
ELV-IB =	.000	ELV-OB =	3.000
ELEVON =	5.000	MACH =	.600
BETAO =	.000	PHI =	.000
DX =	20.000	DY =	.000

RUN NO. 665/ 0 RN/L = 3.29 GRADIENT INTERVAL = -1.00/ 4.00

ALPHAO	DZ	Q(PSF)	PB1	PB2	PB4	LHLS	RHLS	PCAV
10.344	-1.157	424.62770	-.75160	-.69570	-.71860	-.27970	-.25590	-.26130
10.344	1.504	425.37530	-.73390	-.67890	-.70550	-.26320	-.24310	-.24810
10.359	6.352	425.24940	-.74870	-.69640	-.72260	-.26930	-.24980	-.25500
10.371	13.612	425.37210	-.74130	-.69770	-.72030	-.25530	-.23570	-.24430
10.391	28.736	423.99990	-.75460	-.71190	-.73800	-.25400	-.23500	-.24560
10.408	43.809	423.99690	-.76640	-.71840	-.74710	-.26320	-.24310	-.25630
10.408	48.295	423.74680	-.76200	-.71450	-.75160	-.25770	-.23840	-.25310
	GRADIENT	.00000	.00000	.00000	.00000	.00000	.00000	.00000

ORIGINAL PAGE IS
OF POOR QUALITY

CA20 747/1 02 S1 ORBITER DATA (DGN131) (20 JAN 75)

REFERENCE DATA

SREF =	2690.0000 SQ.FT.	XMRP =	1109.0000 IN.XO
LREF =	474.8100 IN.	YMRP =	.0000 IN.YO
BREF =	936.6800 IN.	ZMRP =	375.0000 IN.ZO
SCALE =	.0300		

PARAMETRIC DATA

ALPHAC =	4.000	BETAC =	.000
ELV-1B =	.000	ELV-0B =	3.000
ELEVON =	5.000	MACH =	.600
BETAO =	.000	PHI =	.000
DX =	20.000	DY =	.000

RUN NO. 666/ 0 RN/L = 3.30 GRADIENT INTERVAL = -1.00/ 4.00

ALPHAO	DZ	Q(PSF)	PB1	PB2	PB4	LHLS	RHLS	PCAV
14.563	1.265	425.11880	-.74500	-.68530	-.70320	-.24120	-.21890	-.23810
14.561	3.972	423.99990	-.73390	-.67370	-.70610	-.24670	-.22490	-.24500
14.566	8.805	425.36430	-.75830	-.70670	-.73630	-.25100	-.22960	-.25060
14.572	16.457	425.11720	-.80110	-.74110	-.77610	-.26630	-.24590	-.26700
14.587	31.737	424.12050	-.82620	-.77220	-.80460	-.27420	-.25250	-.27390
14.590	46.430	424.61990	-.83290	-.77350	-.82230	-.26970	-.24780	-.27140
14.592	61.104	424.49550	-.83290	-.77940	-.82280	-.26380	-.24310	-.26920
	GRADIENT	-.41336	.00410	.00429	-.00107	-.00203	-.00222	-.00255

CA20 747/1 02 S1 ORBITER DATA (DGN132) (20 JAN 75)

REFERENCE DATA

SREF =	2690.0000 SQ.FT.	XMRP =	1109.0000 IN.XO
LREF =	474.8100 IN.	YMRP =	.0000 IN.YO
BREF =	936.6800 IN.	ZMRP =	375.0000 IN.ZO
SCALE =	.0300		

PARAMETRIC DATA

ALPHAC =	8.000	BETAC =	.000
ELV-1B =	.000	ELV-0B =	3.000
ELEVON =	5.000	MACH =	.600
BETAO =	.000	PHI =	.000
DX =	.000	DY =	.000

RUN NO. 655/ 0 RN/L = 3.29 GRADIENT INTERVAL = -1.00/ 4.00

ALPHAO	DZ	Q(PSF)	PB1	PB2	PB4	LHLS	RHLS	PCAV
10.325	-3.370	423.33170	-.31070	-.77530	-.71900	-.77230	-.31370	-.26810
10.339	-.284	422.95840	-.29970	-.77140	-.70250	-.76920	-.30090	-.25620
10.358	4.265	422.33470	-.29010	-.76430	-.70760	-.76740	-.29150	-.24680
10.393	11.674	422.57080	-.28640	-.77920	-.71390	-.76570	-.28880	-.24360
10.467	26.974	423.69980	-.28270	-.79090	-.74980	-.80830	-.28550	-.24180
10.499	41.940	424.07130	-.28420	-.79540	-.74120	-.80830	-.28610	-.24360
10.504	47.907	422.83040	-.26720	-.77920	-.75150	-.79730	-.27000	-.22790
	GRADIENT	.00000	.00000	.00000	.00000	.00000	.00000	.00000

CA20 747/1 02 S1 ORBITER DATA (DGN132) (20 JAN 75)

REFERENCE DATA

SREF =	2690.0000 SQ.FT.	XMRP =	1109.0000 IN.XO
LREF =	474.8100 IN.	YMRP =	.0000 IN.YO
BREF =	936.6800 IN.	ZMRP =	375.0000 IN.ZO
SCALE =	.0300		

PARAMETRIC DATA

ALPHAC =	8.000	BETAC =	.000
ELV-IB =	.000	ELV-OB =	3.000
ELEVON =	5.000	MACH =	.600
BETAO =	.000	PHI =	.000
DX =	.000	DY =	.000

RUN NO. 654/ 0 RN/L = 3.27 GRADIENT INTERVAL = -1.00/ 4.00

ALPHAO	DZ	Q(PSF)	PB1	PB2	PB4	LHLS	RHLS	PCAV
14.639	-1.095	422.32570	-.29380	-.76230	-.70020	-.79790	-.29560	-.24800
14.640	1.805	421.95050	-.29390	-.77980	-.71330	-.80830	-.29690	-.24990
14.651	6.322	422.32870	-.30280	-.81090	-.76910	-.84060	-.30500	-.25930
14.669	13.867	422.20360	-.29970	-.82650	-.77710	-.85090	-.30230	-.25810
14.700	28.918	422.45230	-.30190	-.85370	-.80500	-.89070	-.30430	-.26120
14.717	43.759	423.69990	-.30530	-.87120	-.83970	-.90840	-.30970	-.26620
14.720	58.717	422.20210	-.28200	-.85570	-.81580	-.88520	-.28340	-.24300
	GRADIENT	.00000	.00000	.00000	.00000	.00000	.00000	.00000

CA20 747/1 02 S1 ORBITER DATA (DGN133) (20 JAN 75)

REFERENCE DATA

SREF =	2690.0000 SQ.FT.	XMRP =	1109.0000 IN.XO
LREF =	474.8100 IN.	YMRP =	.0000 IN.YO
BREF =	936.6800 IN.	ZMRP =	375.0000 IN.ZO
SCALE =	.0300		

PARAMETRIC DATA

ALPHAC =	8.000	BETAC =	.000
ELV-IB =	.000	ELV-OB =	3.000
ELEVON =	5.000	MACH =	.600
BETAO =	.000	PHI =	.000
DX =	10.000	DY =	.000

RUN NO. 658/ 0 RN/L = 3.32 GRADIENT INTERVAL = -1.00/ 4.00

ALPHAO	DZ	Q(PSF)	PB1	PB2	PB4	LHLS	RHLS	PCAV
10.250	-3.341	422.47320	-.26500	-.73510	-.69460	-.74050	-.27000	-.22920
10.261	-.279	423.96430	-.25100	-.72730	-.67690	-.73140	-.25520	-.21410
10.285	4.305	424.09020	-.25320	-.73580	-.69110	-.74300	-.25720	-.21600
10.320	11.768	424.21290	-.25390	-.74290	-.70480	-.75520	-.25990	-.21730
10.383	26.778	422.84840	-.23840	-.74350	-.70540	-.75580	-.24370	-.20280
10.431	41.918	423.59450	-.24730	-.75000	-.72070	-.76920	-.25310	-.21040
10.441	48.647	423.96900	-.24650	-.75780	-.72760	-.77350	-.25180	-.21040
	GRADIENT	.00000	.00000	.00000	.00000	.00000	.00000	.00000

CA20 747/1 02 S1 ORBITER DATA (DGN133) (20 JAN 75)

REFERENCE DATA

SREF =	2690.0000 SQ.FT.	XMRP =	1109.0000 IN.XO		
LREF =	474.8100 IN.	YMRP =	.0000 IN.YO		
BREF =	936.6800 IN.	ZMRP =	375.0000 IN.ZO		
SCALE =	.0300				

PARAMETRIC DATA

ALPHAC =	8.000	BETAC =	.000
ELV-IB =	.000	ELV-OB =	3.000
ELEVON =	5.000	MACH =	.600
BETAO =	.000	PHI =	.000
DX =	10.000	DY =	.000

RUN NO. 660/ 0 RN/L = 3.29 GRADIENT INTERVAL = -1.00/ 4.00

ALPHAO	DZ	Q(PSF)	PB1	PB2	PB4	LHLS	RHLS	PCAV
14.520	-1.391	423.48740	-.25690	-.70140	-.64900	-.73690	-.25990	-.22290
14.524	1.080	423.10750	-.25910	-.71440	-.65640	-.74420	-.26120	-.22480
14.540	6.153	422.35960	-.26280	-.74220	-.70820	-.77650	-.26730	-.23110
14.567	13.465	422.48370	-.26500	-.76620	-.73840	-.80710	-.27000	-.23420
14.611	28.593	422.60730	-.27310	-.80710	-.78170	-.84550	-.27740	-.24300
14.634	43.596	422.73540	-.27460	-.82130	-.77540	-.85770	-.27940	-.24610
14.648	58.440	423.60390	-.25470	-.81480	-.78620	-.85650	-.25990	-.22730
	GRADIENT	.00000	.00000	.00000	.00000	.00000	.00000	.00000

CA20 747/1 02 S1 ORBITER DATA (DGN134) (20 JAN 75)

REFERENCE DATA

SREF =	2690.0000 SQ.FT.	XMRP =	1109.0000 IN.XO		
LREF =	474.8100 IN.	YMRP =	.0000 IN.YO		
BREF =	936.6800 IN.	ZMRP =	375.0000 IN.ZO		
SCALE =	.0300				

PARAMETRIC DATA

ALPHAC =	8.000	BETAC =	.000
ELV-IB =	.000	ELV-OB =	3.000
ELEVON =	5.000	MACH =	.600
BETAO =	.000	PHI =	.000
DX =	20.000	DY =	.000

RUN NO. 668/ 0 RN/L = 3.28 GRADIENT INTERVAL = -1.00/ 4.00

ALPHAO	DZ	Q(PSF)	PB1	PB2	PB4	LHLS	RHLS	PCAV
10.184	-3.785	423.99840	-.76350	-.71710	-.77390	-.27360	-.24580	-.28450
10.194	.797	424.36960	-.77820	-.72940	-.78180	-.28520	-.25860	-.29650
10.227	8.220	423.37160	-.74650	-.69830	-.75110	-.25530	-.22900	-.26820
10.297	23.195	424.98820	-.77010	-.72360	-.77950	-.26870	-.24380	-.28270
10.347	38.211	425.10930	-.77530	-.72620	-.78870	-.27600	-.24980	-.28960
10.366	48.398	424.98660	-.77450	-.72750	-.78980	-.27420	-.24850	-.28960
	GRADIENT	.00000	.00000	.00000	.00000	.00000	.00000	.00000

CA20 747/1 02 S1 ORBITER DATA (DGN134) (20 JAN 75)

REFERENCE DATA

SREF =	2690.0000 SQ.FT.	XMRP =	1109.0000 IN.XO		
LREF =	474.8100 IN.	YMRP =	.0000 IN.YO		
BREF =	936.6800 IN.	ZMRP =	375.0000 IN.ZO		
SCALE =	.0300				

PARAMETRIC DATA

ALPHAC =	8.000	BETAC =	.000
ELV-IB =	.000	ELV-OB =	3.000
ELEVON =	5.000	MACH =	.600
BETAO =	.000	PHI =	.000
DX =	20.000	DY =	.000

RUN NO. 667/ 0 RN/L = 3.29 GRADIENT INTERVAL = -1.00/ 4.00

ALPHAO	DZ	Q(PSF)	PB1	PB2	PB4	LHLS	RHLS	PCAV
14.434	-1.973	425.11090	-.72580	-.66460	-.68840	-.25220	-.22760	-.25630
14.439	1.123	423.37010	-.73470	-.67300	-.71810	-.26080	-.23700	-.26630
14.456	5.657	425.23210	-.75830	-.69180	-.74080	-.26380	-.24040	-.25950
14.482	13.159	423.48770	-.78340	-.72230	-.76760	-.26750	-.24440	-.27450
14.529	28.036	423.98640	-.81590	-.75860	-.80690	-.27660	-.25390	-.28390
14.557	42.826	424.73480	-.83580	-.77740	-.83080	-.28760	-.26400	-.29580
14.572	57.824	424.60890	-.84020	-.77870	-.83420	-.27480	-.25180	-.28520
	GRADIENT	.00000	.00000	.00000	.00000	.00000	.00000	.00000

CA20 747/1 02 S1 ORBITER DATA (DGN135) (20 JAN 75)

REFERENCE DATA

SREF =	2690.0000 SQ.FT.	XMRP =	1109.0000 IN.XO		
LREF =	474.8100 IN.	YMRP =	.0000 IN.YO		
BREF =	936.6800 IN.	ZMRP =	375.0000 IN.ZO		
SCALE =	.0300				

PARAMETRIC DATA

ALPHAC =	4.000	BETAC =	-5.000
ELV-IB =	.000	ELV-OB =	3.000
ELEVON =	5.000	MACH =	.600
BETAO =	.000	PHI =	.000
DX =	.000	DY =	10.000

RUN NO. 728/ 0 RN/L = 3.27 GRADIENT INTERVAL = -1.00/ 4.00

ALPHAO	DZ	Q(PSF)	PB1	PB2	PB4	LHLS	RHLS	PCAV
10.520	-1.686	423.06520	-.31970	-.78640	-.77670	-.82740	-.31380	.08790
10.517	1.116	424.17930	-.33370	-.80650	-.79260	-.84510	-.32790	.07290
10.515	5.425	423.93060	-.23680	-.76890	-.75280	-.80420	-.29390	.10680
10.523	13.266	423.80940	-.29610	-.77730	-.76300	-.80720	-.29020	.10620
10.531	28.048	422.80750	-.27980	-.77210	-.75680	-.80300	-.27340	.12190
10.541	43.286	424.42010	-.27690	-.77670	-.76700	-.80780	-.27000	.13070
	GRADIENT	.00000	.00000	.00000	.00000	.00000	.00000	.00000

CA20 747/1 02 S1 ORBITER DATA (DGN136) (20 JAN 75)

REFERENCE DATA

SREF =	2690.0000 SQ.FT.	XMRP =	1109.0000 IN.XO		
LREF =	474.8100 IN.	YMRP =	.0000 IN.YO		
BREF =	936.6800 IN.	ZMRP =	375.0000 IN.ZO		
SCALE =	.0300				

PARAMETRIC DATA

ALPHAC =	4.000	BETAC =	-5.000
ELV-IB =	.000	ELV-OB =	3.000
ELEVON =	5.000	MACH =	.600
BETAO =	.000	PHI =	.000
DX =	10.000	DY =	10.000

RUN NO. 732/ 0 RN/L = 3.26 GRADIENT INTERVAL = -1.00/ 4.00

ALPHAO	DZ	Q(PSF)	PB1	PB2	PB4	LHLS	RHLS	PCAV
10.431	-2.314	423.53560	-.29310	-.75080	-.75730	-.80410	-.28820	-1.02240
10.429	1.200	424.28040	-.26660	-.74170	-.72940	-.77970	-.26130	-.99230
10.436	5.568	424.15300	-.29390	-.76890	-.75220	-.80110	-.28820	-1.01490
10.442	12.949	424.52750	-.26650	-.74820	-.73000	-.77720	-.26130	-.99160
10.461	28.270	424.40160	-.24960	-.73450	-.72830	-.76750	-.24240	-.98970
10.477	43.283	423.77990	-.22080	-.71570	-.70890	-.74920	-.21620	-.97720
10.478	47.066	423.41200	-.22150	-.71830	-.71010	-.74850	-.21680	-.98030
	GRADIENT	.00000	.00000	.00000	.00000	.00000	.00000	.00000

CA20 747/1 02 S1 ORBITER DATA (DGN137) (20 JAN 75)

REFERENCE DATA

SREF =	2690.0000 SQ.FT.	XMRP =	1109.0000 IN.XO		
LREF =	474.8100 IN.	YMRP =	.0000 IN.YO		
BREF =	936.6800 IN.	ZMRP =	375.0000 IN.ZO		
SCALE =	.0300				

PARAMETRIC DATA

ALPHAC =	4.000	BETAC =	.000
ELV-IB =	.000	ELV-OB =	3.000
ELEVON =	5.000	MACH =	.600
BETAO =	.000	PHI =	.000
DX =	.000	DY =	10.000

RUN NO. 727/ 0 RN/L = 3.35 GRADIENT INTERVAL = -1.00/ 4.00

ALPHAO	DZ	Q(PSF)	PB1	PB2	PB4	LHLS	RHLS	PCAV
10.539	-1.720	423.56680	-.30710	-.76440	-.73630	-.77910	-.30300	.10050
10.532	1.145	422.68690	-.29680	-.75980	-.73400	-.77060	-.29560	.11060
10.533	5.590	424.17780	-.28790	-.76180	-.72890	-.76750	-.28680	.12190
10.535	13.225	424.05660	-.26360	-.74820	-.71750	-.75720	-.26060	.14640
10.542	28.323	424.05500	-.26430	-.76240	-.73460	-.77610	-.26120	.14820
10.549	43.196	424.17780	-.26500	-.77280	-.74600	-.78590	-.26120	.15200
	GRADIENT	.00000	.00000	.00000	.00000	.00000	.00000	.00000

CA20 747/1 02 S1 ORBITER DATA (DGN138) (20 JAN 75)

REFERENCE DATA

SREF =	2690.0000 SQ.FT.	XMRP =	1109.0000 IN.XO
LREF =	474.8100 IN.	YMRP =	.0000 IN.YO
BREF =	936.6800 IN.	ZMRP =	375.0000 IN.ZO
SCALE =	.0300		

PARAMETRIC DATA

ALPHAC =	4.000	BETAC =	.000
ELV-IB =	.000	ELV-OB =	3.000
ELEVON =	5.000	MACH =	.600
BETAO =	.000	PHI =	.000
DX =	10.000	DY =	10.000

RUN NO. 731/ 0 RN/L = 3.29 GRADIENT INTERVAL = -1.00/ 4.00

ALPHAO	DZ	Q(PSF)	PB1	PB2	PB4	LHLS	RHLS	PCAV
10.439	-1.917	424.02860	-.26060	-.71380	-.69070	-.73270	-.25860	-.98160
10.439	1.309	424.40160	-.25700	-.71830	-.68500	-.72780	-.25520	-.98220
10.441	5.640	423.90740	-.27100	-.73000	-.69980	-.74300	-.26870	-1.00670
10.446	13.088	424.52750	-.25920	-.73000	-.70150	-.74730	-.25650	-1.00920
10.464	28.151	423.90740	-.26360	-.75400	-.72770	-.76690	-.25930	-1.03370
10.475	43.272	423.58950	-.24000	-.73130	-.71580	-.76010	-.23500	-1.02490
10.474	47.051	422.65420	-.23410	-.72810	-.70780	-.75400	-.22900	-1.02050
	GRADIENT	.00000	.00000	.00000	.00000	.00000	.00000	.00000

CA20 747/1 02 S1 ORBITER DATA (DGN139) (20 JAN 75)

REFERENCE DATA

SREF =	2690.0000 SQ.FT.	XMRP =	1109.0000 IN.XO
LREF =	474.8100 IN.	YMRP =	.0000 IN.YO
BREF =	936.6800 IN.	ZMRP =	375.0000 IN.ZO
SCALE =	.0300		

PARAMETRIC DATA

ALPHAC =	4.000	BETAC =	5.000
ELV-IB =	.000	ELV-OB =	3.000
ELEVON =	5.000	MACH =	.600
BETAO =	.000	PHI =	.000
DX =	.000	DY =	10.000

RUN NO. 729/ 0 RN/L = 3.25 GRADIENT INTERVAL = -1.00/ 4.00

ALPHAO	DZ	Q(PSF)	PB1	PB2	PB4	LHLS	RHLS	PCAV
10.550	-1.816	424.54130	-.34550	-.77150	-.77610	-.81820	-.33940	.05590
10.536	1.291	422.67340	-.32480	-.75330	-.74030	-.78650	-.31780	.07100
10.535	5.717	424.53810	-.31300	-.76240	-.75220	-.80300	-.30770	.07790
10.534	13.051	423.36020	-.29680	-.76110	-.75080	-.79810	-.29090	.08730
10.539	29.184	422.52210	-.28720	-.76890	-.77210	-.81270	-.28140	.09480
10.541	43.343	423.54650	-.26730	-.75920	-.76650	-.80170	-.26260	.11750
	GRADIENT	.00000	.00000	.00000	.00000	.00000	.00000	.00000

CA20 747/1 02 S1 ORBITER DATA (DGN140) (20 JAN 75)

REFERENCE DATA

SREF = 2690.0000 SQ.FT. XMRP = 1109.0000 IN.XO
LREF = 474.8100 IN. YMRP = .0000 IN.YO
BREF = 936.6800 IN. ZMRP = 375.0000 IN.ZO
SCALE = .0300

PARAMETRIC DATA

ALPHAC =	4.000	BETAC =	5.000
ELV-IB =	.000	ELV-OB =	3.000
ELEVON =	5.000	MACH =	.600
BETAO =	.000	PHI =	.000
DX =	10.000	DY =	10.000

RUN NO. 733/ 0 RN/L = 3.25 GRADIENT INTERVAL = -1.00/ 4.00

ALPHAO	DZ	Q(PSF)	PB1	PB2	PB4	LHLS	RHLS	PCAV
10.454	-1.821	424.28990	-.26720	-.69630	-.68730	-.73020	-.28210	-.97030
10.451	1.281	424.66130	-.26800	-.69180	-.66450	-.71070	-.26400	-.95460
10.450	5.640	424.28830	-.27760	-.71830	-.69640	-.73760	-.27200	-.96710
10.454	13.081	423.78460	-.26800	-.73130	-.71580	-.75530	-.26400	-.96960
10.469	28.314	424.52750	-.22960	-.71380	-.71060	-.74550	-.22560	-.94890
10.478	43.187	424.40790	-.23550	-.73000	-.72600	-.75890	-.22960	-.96710
10.479	47.015	424.15610	-.23850	-.72940	-.72830	-.76870	-.23370	-.97660
	GRADIENT	.00000	.00000	.00000	.00000	.00000	.00000	.00000

CA20 747/1 01 S1 ORBITER DATA (DGN141) (20 JAN 75)

REFERENCE DATA

SREF = 2690.0000 SQ.FT. XMRP = 1109.0000 IN.XO
LREF = 474.8100 IN. YMRP = .0000 IN.YO
BREF = 936.6800 IN. ZMRP = 375.0000 IN.ZO
SCALE = .0300

PARAMETRIC DATA

ALPHAC =	4.000	BETAC =	.000
ELV-IB =	10.000	ELV-OB =	13.000
ELEVON =	5.000	MACH =	.600
BETAO =	.000	PHI =	.000
DX =	.000	DY =	.000

RUN NO. 707/ 0 RN/L = 3.25 GRADIENT INTERVAL = -1.00/ 4.00

ALPHAO	DZ	Q(PSF)	PB1	PB2	PB4	LHLS	RHLS	PCAV
10.523	-1.884	424.16970	-.34030	-.35780	-.33240	-.33460	-.33730	-.18960
10.504	.978	422.42930	-.33290	-.34550	-.31140	-.32790	-.32790	-.17020
10.501	5.523	422.55130	-.33150	-.34230	-.30800	-.32660	-.32650	-.16770
10.504	13.055	422.80140	-.33510	-.34420	-.30910	-.32850	-.32920	-.17140
10.516	28.002	422.79840	-.33590	-.34360	-.30970	-.32970	-.32920	-.17080
10.523	42.970	423.17640	-.33740	-.34360	-.31080	-.33210	-.33060	-.16890
	GRADIENT	.00000	.00000	.00000	.00000	.00000	.00000	.00000

ORIGINAL PAGE IS OF POOR QUALITY

CA20 747/1 01 SI ORBITER DATA (DGN141) (20 JAN 75)

REFERENCE DATA

SREF =	2690.0000 SQ.FT.	XMRP =	1109.0000 IN.XO
LREF =	474.8100 IN.	YMRP =	.0000 IN.YO
BREF =	936.6800 IN.	ZMRP =	375.0000 IN.ZO
SCALE =	.0300		

PARAMETRIC DATA

ALPHAC =	4.000	BETAC =	.000
ELV-IB =	10.000	ELV-OB =	13.000
ELEVON =	5.000	MACH =	.600
BETAO =	.000	PHI =	.000
DX =	.000	DY =	.000

RUN NO. 708/ 0 RN/L = 3.19 GRADIENT INTERVAL = -1.00/ 4.00

ALPHAO	DZ	Q(PSF)	PB1	PB2	PB4	LHLS	RHLS	PCAV
14.811	.024	423.54500	-.37650	-.37600	-.35520	-.37430	-.36890	-.17270
14.784	3.045	422.67490	-.34470	-.34420	-.32450	-.34370	-.33860	-.14250
14.771	7.498	422.16720	-.34400	-.34230	-.32390	-.34310	-.33730	-.14320
14.765	14.984	423.54030	-.36100	-.35850	-.34270	-.35840	-.35280	-.16080
14.762	29.993	422.91890	-.34700	-.34160	-.32960	-.34620	-.33860	-.14690
14.773	45.117	423.90850	-.33880	-.33450	-.31990	-.33700	-.33060	-.13940
	GRADIENT		-.28805	.01053	.01053	.01016	.01013	.01003	.01000

CA20 747/1 01 SI ORBITER DATA (DGN142) (20 JAN 75)

REFERENCE DATA

SREF =	2690.0000 SQ.FT.	XMRP =	1109.0000 IN.XO
LREF =	474.8100 IN.	YMRP =	.0000 IN.YO
BREF =	936.6800 IN.	ZMRP =	375.0000 IN.ZO
SCALE =	.0300		

PARAMETRIC DATA

ALPHAC =	4.000	BETAC =	.000
ELV-IB =	-10.000	ELV-OB =	-7.000
ELEVON =	5.000	MACH =	.600
BETAO =	.000	PHI =	.000
DX =	.000	DY =	.000

RUN NO. 709/ 0 RN/L = 3.26 GRADIENT INTERVAL = -1.00/ 4.00

ALPHAO	DZ	Q(PSF)	PB1	PB2	PB4	LHLS	RHLS	PCAV
10.510	-2.321	422.80750	-.32040	-.33460	-.30450	-.31380	-.31910	-.12870
10.492	.765	422.43090	-.29970	-.31380	-.28290	-.29490	-.29820	-.10930
10.488	5.227	423.67710	-.30710	-.32090	-.28970	-.30220	-.30560	-.11740
10.491	12.822	423.30410	-.29820	-.30990	-.27890	-.29250	-.29550	-.11050
10.501	27.760	423.42530	-.29450	-.30470	-.27490	-.29000	-.29220	-.10990
10.504	42.754	422.18070	-.28270	-.29240	-.26130	-.27780	-.27940	-.09730
	GRADIENT		.00000	.00000	.00000	.00000	.00000	.00000	.00000

RUN NO. 710/ 0 RN/L = 3.22 GRADIENT INTERVAL = -1.00/ 4.00

ALPHAO	DZ	Q(PSF)	PB1	PB2	PB4	LHLS	RHLS	PCAV
14.880	.715	422.92950	-.33290	-.33520	-.31020	-.33090	-.32650	-.12680
14.855	3.826	423.05380	-.31890	-.32290	-.29770	-.31750	-.31370	-.11490
14.843	8.214	422.92950	-.32110	-.32420	-.30000	-.31930	-.31570	-.11740
14.833	15.830	422.17920	-.30190	-.30280	-.28120	-.29980	-.29550	-.09920
14.832	30.666	422.92790	-.31890	-.32030	-.30060	-.31810	-.31370	-.11870
14.845	45.837	423.79510	-.30340	-.30280	-.28350	-.30160	-.29590	-.10360
	GRADIENT		.03996	.00450	.00395	.00402	.00431	.00411	.00383

DATE 01 DEC 75 TABULATED SOURCE DATA - CA20

CA20 747/1 01 S1 ORBITER DATA (DGN1431) (20 JAN 75)

REFERENCE DATA

SREF =	2690.0000 SQ.FT.	XMRP =	1109.0000 IN.XO		
LREF =	474.8100 IN.	YMRP =	.0000 IN.YO		
BREF =	936.6800 IN.	ZMRP =	375.0000 IN.ZO		
SCALE =	.0300				

PARAMETRIC DATA

ALPHAC =	4.000	BETAC =	.000
RUD-U =	15.000	RUD-L =	15.000
ELEVON =	5.000	AILRON =	.000
BETAO =	.000	PHI =	.000
DX =	.000	DY =	.000

RUN NO. 711/ 0 RN/L = 3.26 GRADIENT INTERVAL = -1.00/ 4.00

ALPHAO	DZ	Q(PSF)	PB1	PB2	PB4	LHLS	RHLS	PCAV
10.504	-2.028	423.55120	-.33290	-.34620	-.31540	-.32970	-.33190	-.14250
10.485	.931	423.18130	-.34770	-.35860	-.32680	-.34370	-.34530	-.15570
10.480	5.560	422.30980	-.30930	-.32030	-.28690	-.30590	-.30630	-.11990
10.486	12.957	423.80300	-.31740	-.32740	-.29370	-.31260	-.31370	-.12930
10.495	27.883	422.93400	-.31080	-.31900	-.28580	-.30470	-.30830	-.12240
10.513	42.996	423.55440	-.31740	-.32290	-.29030	-.30770	-.31370	-.12490
	GRADIENT	.00000	.00000	.00000	.00000	.00000	.00000	.00000

RUN NO. 712/ 0 RN/L = 3.23 GRADIENT INTERVAL = -1.00/ 4.00

ALPHAO	DZ	Q(PSF)	PB1	PB2	PB4	LHLS	RHLS	PCAV
14.850	.267	422.81500	-.34180	-.34490	-.31650	-.33950	-.33460	-.12370
14.835	3.331	423.80610	-.32630	-.32870	-.30110	-.32420	-.31980	-.11050
14.823	7.779	423.06640	-.31600	-.31710	-.29200	-.31440	-.30900	-.10300
14.816	15.439	423.19390	-.32920	-.33070	-.30630	-.32730	-.32310	-.11870
14.812	30.319	423.19080	-.33510	-.33520	-.31250	-.33400	-.32850	-.12560
14.814	45.332	423.43630	-.34400	-.34170	-.31990	-.34130	-.33520	-.13370
	GRADIENT	.32343	.00506	.00529	.00503	.00499	.00483	.00431

CA20 747/1 02 SI ORBITER DATA (DGN144) (20 JAN 75)

REFERENCE DATA

SREF =	2690.0000 SQ.FT.	XMRP =	1109.0000 IN.XO
LREF =	474.8100 IN.	YMRP =	.0000 IN.YO
BREF =	936.6800 IN.	ZMRP =	375.0000 IN.ZO
SCALE =	.0300		

PARAMETRIC DATA

ALPHAC =	4.000	BETAC =	.000
RUD-U =	15.000	RUD-L =	15.000
ELEVON =	5.000	AILROH =	.000
BETAO =	.000	PHI =	.000
DX =	.000	DY =	.000

RUN NO. 725/ 0 RN/L = 3.35 GRADIENT INTERVAL = -1.00/ 4.00

ALPHAO	DZ	Q(PSF)	PB1	PB2	PB4	LHLS	RHLS	PCAV
10.493	-2.198	422.64270	-.26570	-.68840	-.66940	-.71610	-.26320	-.09850
10.490	.873	424.58430	-.24360	-.68260	-.66650	-.71120	-.24230	-.06590
10.498	5.397	424.08080	-.23250	-.69820	-.68190	-.71610	-.23290	-.05530
10.503	12.963	424.08240	-.22810	-.70460	-.69560	-.72890	-.23020	-.05210
10.527	28.053	424.44900	-.22000	-.70980	-.70410	-.73690	-.22350	-.04400
10.533	42.969	423.33380	-.23400	-.73060	-.72060	-.74790	-.23630	-.05460
	GRADIENT	.00000	.00000	.00000	.00000	.00000	.00000	.00000

CA20 747/1 01 SI ORBITER DATA (DGN145) (20 JAN 75)

REFERENCE DATA

SREF =	2690.0000 SQ.FT.	XMRP =	1109.0000 IN.XO
LREF =	474.8100 IN.	YMRP =	.0000 IN.YO
BREF =	936.6800 IN.	ZMRP =	375.0000 IN.ZO
SCALE =	.0300		

PARAMETRIC DATA

ALPHAC =	4.000	BETAC =	.000
ELV-IB =	.000	ELV-OB =	3.000
ELEVON =	.000	MACH =	.600
BETAO =	.000	PHI =	.000
DX =	.000	DY =	.000

RUN NO. 719/ 0 RN/L = 3.37 GRADIENT INTERVAL = -1.00/ 4.00

ALPHAO	DZ	Q(PSF)	PB1	PB2	PB4	LHLS	RHLS	PCAV
10.508	-2.315	422.51620	-.32920	-.34290	-.32900	-.32910	-.33050	-.14950
10.485	.910	423.13980	-.30930	-.32610	-.31310	-.31010	-.31230	-.12810
10.479	5.273	423.61280	-.29380	-.31120	-.29880	-.29610	-.29950	-.11430
10.493	12.814	422.89270	-.29820	-.31630	-.30220	-.30160	-.30290	-.11870
10.514	27.985	423.02490	-.27830	-.29690	-.28060	-.28080	-.28270	-.09860
10.516	42.855	423.76610	-.27750	-.29560	-.27780	-.27960	-.28200	-.09540
	GRADIENT	.00000	.00000	.00000	.00000	.00000	.00000	.00000

RUN NO. 720/ 0 RN/L = 3.36 GRADIENT INTERVAL = -1.00/ 4.00

ALPHAO	DZ	Q(PSF)	PB1	PB2	PB4	LHLS	RHLS	PCAV
14.834	.261	422.89570	-.30410	-.32480	-.29260	-.30590	-.30630	-.10110
14.809	3.316	423.76450	-.30340	-.32480	-.28970	-.30460	-.30560	-.09860
14.756	7.681	423.76610	-.29670	-.31830	-.28060	-.29730	-.29890	-.08980
14.787	15.232	423.26570	-.29160	-.31310	-.27260	-.29050	-.29280	-.08290
14.785	30.199	423.26260	-.28640	-.30790	-.26580	-.28510	-.28740	-.07470
14.765	45.162	422.76820	-.29380	-.31500	-.28750	-.28940	-.29410	-.08040
	GRADIENT	.28436	.00023	.00000	.00095	.00043	.00023	.00092

CA20 747/1 01 S1 ORBITER DATA (DGH146) (20 JAN 75)

REFERENCE DATA

SREF = 2690.0000 SQ.FT. XMRP = 1109.0000 IN.XO
LREF = 474.8100 IN. YMRP = .0000 IN.YO
BREF = 936.6800 IN. ZMRP = 375.0000 IN.ZO
SCALE = .0300

PARAMETRIC DATA

ALPHAC =	4.000	BETAC =	.000
ELV-IB =	.000	ELV-OB =	3.000
ELEVON =	10.000	MACH =	.600
BETAO =	.000	PHI =	.000
DX =	.000	DY =	.000

RUN NO. 714/ 0 RN/L = 3.32 GRADIENT INTERVAL = -1.00/ 4.00

ALPHAO	DZ	Q(PSF)	PB1	PB2	PB4	LHLS	RHLS	PCAV
10.553	-1.753	423.46930	-.36760	-.38900	-.36200	-.36150	-.36690	-.18770
10.538	1.319	422.97150	-.33880	-.35730	-.33530	-.33400	-.33930	-.15700
10.533	5.976	422.59790	-.34840	-.36630	-.34380	-.34370	-.34800	-.16760
10.546	13.370	422.84650	-.33510	-.35340	-.33020	-.33150	-.33520	-.15630
10.559	28.434	423.34020	-.33370	-.35010	-.32680	-.32970	-.33320	-.15380
10.566	43.399	423.83450	-.33220	-.34690	-.32220	-.32730	-.32990	-.14880
	GRADIENT	.00000	.00000	.00000	.00000	.00000	.00000	.00000

RUN NO. 715/ 0 RN/L = 3.26 GRADIENT INTERVAL = -1.00/ 4.00

ALPHAO	DZ	Q(PSF)	PB1	PB2	PB4	LHLS	RHLS	PCAV
14.836	.243	423.98670	-.37210	-.38380	-.35580	-.37060	-.36890	-.15700
14.814	3.412	423.10100	-.34920	-.35990	-.33190	-.34860	-.34670	-.13560
14.803	7.911	423.47400	-.34250	-.35470	-.32620	-.34190	-.34060	-.13060
14.796	15.416	424.09410	-.35800	-.36630	-.33870	-.35470	-.35480	-.14440
14.790	30.262	424.34120	-.37130	-.37930	-.35240	-.36940	-.36760	-.15700
14.791	45.331	422.97300	-.35580	-.36110	-.33420	-.35170	-.35210	-.14190
	GRADIENT	-.27321	.00723	.00754	.00764	.00694	.00701	.00675

CA20 747/1 01 S1 ORBITER DATA (DGN147) (20 JAN 75)

REFERENCE DATA

SREF =	2690.0000 SQ.FT.	XMRP =	1109.0000 IN.XO
LREF =	474.8100 IN.	YMRP =	.0000 IN.YO
BREF =	936.6800 IN.	ZMRP =	375.0000 IN.ZO
SCALE =	.0300		

PARAMETRIC DATA

ALPHAC =	4.000	BETAC =	.000
ELV-IB =	.000	ELV-OB =	3.000
ELEVON =	10.000	MACH =	.300
BETAO =	.000	PHI =	.000
DX =	.000	DY =	.000

RUN NO. 717/ 0 RN/L = 1.89 GRADIENT INTERVAL = -1.00/ 4.00

ALPHAO	DZ	Q(PSF)	PB1	PB2	PB4	LHLS	RHLS	PCAV
10.141	-2.619	126.39020	-.13140	-.12900	-.10530	-.12540	-.12660	-.07600
10.136	.296	126.53600	-.12620	-.12380	-.09900	-.11970	-.12180	-.06970
10.135	4.872	127.11910	-.11960	-.12000	-.09340	-.11170	-.11650	-.06280
10.138	12.202	126.39040	-.12920	-.13100	-.10250	-.12030	-.12590	-.07350
10.139	26.995	126.09880	-.12030	-.12060	-.09560	-.11110	-.11650	-.06720
10.142	42.221	126.97320	-.11890	-.11930	-.09620	-.11110	-.11440	-.06840
	GRADIENT	.00000	.00000	.00000	.00000	.00000	.00000	.00000

CA20 747/1 01 S1 ORBITER DATA (DGN148) (20 JAN 75)

REFERENCE DATA

SREF =	2690.0000 SQ.FT.	XMRP =	1109.0000 IN.XO
LREF =	474.8100 IN.	YMRP =	.0000 IN.YO
BREF =	936.6800 IN.	ZMRP =	375.0000 IN.ZO
SCALE =	.0300		

PARAMETRIC DATA

ALPHAC =	4.000	BETAC =	.000
ELV-IB =	.000	ELV-OB =	3.000
ELEVON =	10.000	MACH =	.700
BETAO =	.000	PHI =	.000
DX =	.000	DY =	.000

RUN NO. 716/ 0 RN/L = 3.54 GRADIENT INTERVAL = -1.00/ 4.00

ALPHAO	DZ	Q(PSF)	PB1	PB2	PB4	LHLS	RHLS	PCAV
10.674	-1.671	529.30160	-.43700	-.44090	-.41950	-.43560	-.43290	-.21410
10.676	1.362	529.18870	-.40750	-.41110	-.39050	-.41150	-.40260	-.18770
10.669	5.761	529.75610	-.41410	-.41630	-.39560	-.41880	-.40730	-.19650
10.672	13.248	529.53780	-.37720	-.37740	-.35750	-.38040	-.36820	-.16200
10.678	28.136	529.30680	-.37650	-.37540	-.35690	-.37980	-.36620	-.16140
10.687	43.386	530.11770	-.36170	-.35990	-.34270	-.36390	-.35140	-.14760
	GRADIENT	.00000	.00000	.00000	.00000	.00000	.00000	.00000

ORIGINAL PAGE IS
OF POOR QUALITY

CA20 747/1 01 S1 ORBITER DATA (OGN149) (28 JAN 75)

REFERENCE DATA

SREF =	2690.0000 SQ.FT.	XMRP =	1109.0000 IN.XO		
LREF =	474.8100 IN.	YMRP =	.0000 IN.YO		
BREF =	936.6800 IN.	ZMRP =	375.0000 IN.ZO		
SCALE =	.0300				

PARAMETRIC DATA

ALPHAC =	4.000	BETAC =	.000
RUD-U =	.000	RUD-L =	.000
ELEVON =	5.000	AILRON =	-18.000
BETAO =	.000	PHI =	.000
DX =	.000	DY =	.000

RUN NO. 722/ 0 RN/L = 3.33 GRADIENT INTERVAL = -1.00/ 4.00

ALPHAO	DZ	Q(PSF)	PB1	PB2	PB4	LHLS	RHLS	PCAV
10.503	-2.010	423.21030	-.40150	-.41550	-.40190	-.39930	-.40390	-.20720
10.487	1.016	423.70940	-.38900	-.40190	-.38760	-.38580	-.39040	-.19340
10.482	5.470	423.70780	-.37790	-.39090	-.37570	-.37480	-.37900	-.18210
10.481	12.919	422.95420	-.38380	-.39670	-.38080	-.38100	-.38570	-.19030
10.494	28.155	423.45580	-.37790	-.38830	-.37340	-.37300	-.37900	-.18210
10.501	42.900	424.19570	-.37570	-.38380	-.36940	-.36750	-.37630	-.17650
	GRADIENT	.00000	.00000	.00000	.00000	.00000	.00000	.00000

RUN NO. 723/ 0 RN/L = 3.28 GRADIENT INTERVAL = -1.00/ 4.00

ALPHAO	DZ	Q(PSF)	PB1	PB2	PB4	LHLS	RHLS	PCAV
14.792	.127	423.95340	-.42300	-.42910	-.40700	-.41700	-.41800	-.20530
14.780	2.855	422.95570	-.40080	-.40710	-.38530	-.39620	-.39580	-.18590
14.769	7.573	423.20430	-.39200	-.39670	-.37620	-.38710	-.38640	-.17710
14.755	15.007	423.82900	-.40010	-.40390	-.38420	-.39380	-.39380	-.18460
14.753	30.023	424.44430	-.40670	-.40900	-.39160	-.40170	-.40050	-.19090
14.748	45.056	423.70160	-.39050	-.39220	-.37510	-.38520	-.38300	-.17460
	GRADIENT	-.36583	.00814	.00807	.00796	.00763	.00814	.00711

CA20 747/1 CARRIER DATA (HGN034) (25 NOV 75)

REFERENCE DATA

SREF = 9500.0000 SQ.FT. XMRP = 1339.9000 IN.XC
LREF = 327.7800 IN. YMRP = .0000 IN.YC
BREF = 2348.0400 IN. ZMRP = 190.8000 IN.ZC
SCALE = .0300

PARAMETRIC DATA

BETAC = -5.000 ELV-IB = .000
ELV-OB = 3.000 RUD-U = .000
RUD-L = .000 RUD747 = .000

RN/L = 3.27 GRADIENT INTERVAL = -1.00/ 5.00

MACH = .600

ALPHAW	CN	CA	CLM	CY	CBL	CYN	CL	CD	CSL	CLN
2.000	.21009	.07942	.00176	.09722	.01307	-.02331	.20719	.08670	.01224	-.02375
4.000	.38969	.06106	-.04604	.09484	.01505	-.02194	.38448	.08809	.01349	-.02294
6.000	.57029	.03520	-.08340	.09183	.01674	-.02006	.56349	.09461	.01455	-.02170
8.000	.75184	.01035	-.10342	.08796	.01792	-.01768	.74308	.11489	.01529	-.02001
10.000	.93004	.00086	-.10652	.08311	.01728	-.01784	.91578	.16235	.01392	-.02057
12.000	1.05103	.00251	-.12312	.08981	.01762	-.01747	1.02832	.22114	.01351	-.02075
GRADIENT	.08930	-.00918	-.02390	-.00119	.00099	.00069	.08865	.00070	.00062	.00041

CA20 747/1 CARRIER DATA (HGN035) (25 NOV 75)

REFERENCE DATA

SREF = 9500.0000 SQ.FT. XMRP = 1339.9000 IN.XC
LREF = 327.7800 IN. YMRP = .0000 IN.YC
BREF = 2348.0400 IN. ZMRP = 190.8000 IN.ZC
SCALE = .0300

PARAMETRIC DATA

BETAC = .000 ELV-IB = .000
ELV-OB = 3.000 RUD-U = .000
RUD-L = .000 RUD747 = .000

RN/L = 3.31 GRADIENT INTERVAL = -1.00/ 5.00

MACH = .600

ALPHAW	CN	CA	CLM	CY	CBL	CYN	CL	CD	CSL	CLN
2.000	.20398	.08521	.01725	-.00721	.00004	.00180	.19988	.09225	.00010	.00180
4.000	.38765	.06673	-.03959	-.00835	-.00016	.00181	.38205	.09351	-.00004	.00182
6.000	.57352	.04041	-.08767	-.01038	-.00072	.00216	.56525	.10014	-.00049	.00222
8.000	.75259	.01418	-.10541	-.01068	-.00032	.00242	.74329	.11879	.00002	.00244
10.000	.91875	.01131	-.07921	-.01163	-.00079	.00279	.90283	.17058	-.00029	.00288
12.000	1.05884	.00584	-.10533	-.00941	-.00136	.00184	1.03449	.22595	-.00095	.00209
GRADIENT	.09233	-.00924	-.02842	-.00057	-.00010	.00001	.09108	.00069	-.00007	.00001

CA20 747/1 CARRIER DATA (MGN036) (25 NOV 75)

REFERENCE DATA

SREF = 5500.0000 SQ.FT. XMRP = 1339.9000 IN.XC
LREF = 327.7800 IN. YMRP = .0000 IN.YC
BREF = 2348.0400 IN. ZMRP = 190.8000 IN.ZC
SCALE = .0300

PARAMETRIC DATA

BETAC = 5.000 ELV-IB = .000
ELV-OB = 3.000 RUD-U = .000
RUD-L = .000 RUD747 = .000

RN/L = 3.27 GRADIENT INTERVAL = -1.00/ 5.00

MACH = .600

ALPHAW	CN	CA	CLM	CY	CBL	CYN	CL	CD	CSL	CLN
2.000	.21484	.07863	-.00945	-.12262	-.01448	.02962	.21197	.08608	-.01344	.03011
4.000	.39363	.06034	-.05439	-.11703	-.01616	.02678	.38846	.08765	-.01425	.02784
6.000	.57576	.03480	-.08729	-.11289	-.01784	.02434	.56897	.09480	-.01530	.02608
8.000	.75973	.00937	-.11637	-.10926	-.01894	.02204	.75103	.11501	-.01559	.02446
10.000	.93260	.00307	-.12870	-.11126	-.01644	.02267	.91790	.16497	-.01225	.02518
12.000	1.06286	.00003	-.13188	-.11002	-.01981	.02125	1.03963	.22101	-.01496	.02490
GRADIENT	.08939	-.00915	-.02247	.00280	-.00084	-.00142	.08825	.00079	-.00041	-.00113

CA20 747/1 01 S1 CARRIER DATA (MGN037) (25 NOV 75)

REFERENCE DATA

SREF = 5500.0000 SQ.FT. XMRP = 1339.9000 IN.XC
LREF = 327.7800 IN. YMRP = .0000 IN.YC
BREF = 2348.0400 IN. ZMRP = 190.8000 IN.ZC
SCALE = .0300

PARAMETRIC DATA

ALPHAC = 4.000 BETAC = .000
ELV-IB = .000 ELV-OB = 3.000
ELEVON = 5.000 BETAO = .000
PHI = .000 DX = .000
DY = .000 DZ = 7..00

RN/L = 3.29 GRADIENT INTERVAL = .00/ 12.00

MACH = .600

ALPHAO	CN	CA	CLM	CY	CBL	CYN	CL	CD	CSL	CLN
6.000	.47783	.05554	-.06853	-.00806	.00045	.00075	.46978	.10353	.00052	.00070
8.000	.44707	.05523	-.01603	-.00838	.00032	.00074	.43919	.10018	.00039	.00071
10.000	.41156	.05502	.03836	-.00831	.00050	.00068	.40385	.09650	.00057	.00052
12.000	.37699	.05454	.09086	-.00839	.00054	.00060	.36949	.09259	.00059	.00053
14.000	.34259	.05472	.13109	-.00878	.00060	.00101	.33524	.08933	.00070	.00094
16.000	.30364	.05360	.18460	-.00847	.00065	.00071	.29658	.08432	.00072	.00064
18.000	.26299	.05216	.25393	-.00766	.00060	.00013	.25627	.07891	.00061	.00007
GRADIENT	-.01690	-.00016	.02663	-.00005	.00004	-.00003	.01681	-.00183	.00003	-.00003

CA20 747/1 01 S1 CARRIER DATA (HGN038) (25 NOV 75)

REFERENCE DATA

SREF =	5500.0000 SQ.FT.	XMRP =	1339.9000 IN.XC		
LREF =	327.7800 IN.	YMRP =	.0000 IN.YC		
BREF =	2348.0400 IN.	ZMRP =	180.8000 IN.ZC		
SCALE =	.0300				

PARAMETRIC DATA

ALPHAC =	4.000	ELV-IB =	.000
ELV-OB =	3.000	ELEVON =	5.000
ALPHAO =	10.000	BETAO =	.000
PHI =	.000	DX =	.000
DY =	.000	DZ =	7.500

RN/L = 3.33 GRADIENT INTERVAL = -5.00/ 5.00

MACH = .600

BETA	CN	CA	CLM	CY	CBL	CYN	CL	CD	CSL	CLN
-10.000	.44664	.04140	-.05785	.20812	.03441	-.04030	.44015	.08639	.03016	-.04359
-7.000	.42723	.04522	-.02185	.14417	.02600	-.03028	.42046	.08926	.02280	-.03275
-5.000	.41424	.04923	.01048	.10117	.01808	-.02180	.40711	.09097	.01658	-.02350
-3.000	.40780	.05228	.03326	.05865	.01106	-.01402	.40038	.09341	.00959	-.01507
-2.000	.40586	.05367	.03956	.03700	.00744	-.00964	.39831	.09459	.00643	-.01035
-1.000	.40589	.05499	.04291	.01210	.00347	-.00372	.39821	.09591	.00307	-.00405
.000	.40792	.05540	.04409	-.01145	-.00017	.00186	.40019	.09650	.00002	.00186
1.000	.40830	.05515	.04582	-.03319	-.00368	.00698	.40060	.09631	-.00295	.00732
2.000	.40967	.05413	.03962	-.05609	-.00757	.01252	.40206	.09542	-.00626	.01322
3.000	.41359	.05228	.02959	-.07974	-.01108	.01762	.40615	.09399	-.00923	.01855
5.000	.42330	.04861	.00924	-.12000	-.01798	.02405	.41619	.09128	-.01545	.02575
10.000	.45515	.03990	-.04913	-.22492	-.03218	.04140	.44877	.08579	-.02782	.04444
GRADIENT	.00093	-.00003	-.00018	-.02247	-.00369	.00486	.00093	.00007	-.00318	.00521

CA20 747/1 01 S1 CARRIER DATA (MGN039) (25 NOV 75)

REFERENCE DATA

SREF = 5500.0000 SQ.FT. XMRP = 1339.9000 IN.XC
LREF = 327.7800 IN. YMRP = .0000 IN.YC
BREF = 2348.0400 IN. ZMRP = 190.8000 IN.ZC
SCALE = .0300

PARAMETRIC DATA

ALPHAC =	4.000	ELV-IB =	.000
ELV-OB =	3.000	ELEVON =	5.000
ALPHAO =	10.000	BETAO =	.000
PHI =	.000	DX =	.000
DY =	10.000	DZ =	7.500

RN/L = 3.35 GRADIENT INTERVAL = -5.00/ 5.00

MACH = .600

BETA	CN	CA	CLM	CY	CBL	CYN	CL	CD	CSL	CLN
-10.000	.44662	.04517	-.09568	.18684	.03934	-.03747	.43976	.09010	.03535	-.04126
-7.000	.42818	.04774	-.06126	.12755	.03105	-.02955	.42115	.09086	.02790	-.03254
-5.000	.42244	.05127	-.04079	.08491	.02436	-.02130	.41507	.09381	.02207	-.02366
-3.000	.41593	.05411	-.01160	.04120	.01717	-.01262	.40830	.09600	.01580	-.01439
-2.000	.41402	.05521	.00109	.02096	.01352	-.00864	.40629	.09690	.01258	-.00997
-1.000	.41369	.05584	.01297	.00037	.00990	-.00459	.40590	.09750	.00938	-.00557
.000	.41356	.05654	.02413	-.01875	.00641	-.00095	.40570	.09819	.00628	-.00159
1.000	.41387	.05652	.03290	-.03566	.00297	.00205	.40600	.09821	.00316	.00174
2.000	.41342	.05606	.03576	-.05435	-.00049	.00523	.40550	.09771	.00004	.00525
3.000	.41472	.05480	.04003	-.07409	-.00376	.00901	.40702	.09659	-.00283	.00934
5.000	.42056	.05073	.03823	-.11888	-.01055	.01891	.41324	.09312	-.00858	.01888
10.000	.44681	.03802	-.00751	-.23242	-.02647	.04158	.44066	.08308	-.02213	.04404
GRADIENT	-.00018	.00002	.00820	-.01989	-.00349	.00385	-.00018	.00001	-.00308	.00418

CA20 747/0 01 S1 AT38 AT39 CARRIER DATA (MGN040) (25 NOV 75)

REFERENCE DATA

SREF = 5500.0000 SQ.FT. XMRP = 1339.9000 IN.XC
LREF = 327.7800 IN. YMRP = .0000 IN.YC
BREF = 2348.0400 IN. ZMRP = 190.8000 IN.ZC
SCALE = .0300

PARAMETRIC DATA

ALPHAC =	.000	BETAC =	.000
ELV-IB =	.000	ELV-OB =	3.000
ELEVON =	5.000	MACH =	.600
BETAO =	.000	PHI =	.000
DX =	.000	DY =	.000

RN/L = 3.37 GRADIENT INTERVAL = -1.00/ 4.00

ALPHAO = 8.000

DZ	CN	CA	CLM	CY	CBL	CYN	CL	CD	CSL	CLN
.000	.16983	.07445	.18715	-.00751	.00110	.00099	.16721	.08018	.00113	.00095
3.000	.18307	.07533	.17528	-.00638	.00123	.00043	.18041	.08150	.00124	.00039
7.500	.18891	.07576	.17102	-.00556	.00133	.00001	.18624	.08212	.00133	-.00003
15.000	.21611	.07699	.13195	-.00801	.00089	.00144	.21339	.08424	.00094	.00141
30.000	.25972	.07778	.07274	-.00926	.00054	.00235	.25699	.08542	.00051	.00233
45.000	.27522	.07754	.04992	-.00933	.00032	.00238	.27249	.08564	.00040	.00237
60.000	.24024	.06984	.10864	.00249	.00246	-.00343	.23776	.07787	.00234	-.00351
GRADIENT	.00441	.00029	-.00396	.00038	.00004	-.00019	.00440	.00044	.00004	-.00019

CA20 747/0 01 SI AT38 AT39 CARRIER DATA (HGN041) (25 NOV 75)

REFERENCE DATA

SREF = 5500.0000 SQ.FT. XMRP = 1339.9000 IN.XC
LREF = 327.7800 IN. YMRP = .0000 IN.YC
BREF = 2348.0400 IN. ZMRP = 190.8000 IN.ZC
SCALE = .0300

PARAMETRIC DATA

ALPHAC =	4.000	BETAC =	.000
ELV-IB =	.000	ELV-OB =	3.000
ELEVON =	5.000	MACH =	.600
BETAO =	.000	PHI =	.000
DX =	.000	DY =	.000

RN/L = 3.27 GRADIENT INTERVAL = -1.00/ 4.00

ALPHAO = 12.000

DZ	CN	CA	CLM	CY	CBL	CYN	CL	CD	CSL	CLN
.000	.46630	.03548	.10572	-.00809	.00080	.00023	.46028	.08269	.00082	.00014
3.000	.47936	.03638	.10554	-.00845	.00069	.00070	.47318	.08489	.00076	.00063
7.500	.49152	.03743	.08205	-.00919	.00042	.00132	.49514	.08813	.00056	.00127
15.000	.53201	.03782	.04048	-.01052	.00011	.00198	.52544	.09159	.00031	.00196
30.000	.57480	.03704	-.00949	-.01072	-.00024	.00248	.56812	.09490	.00001	.00249
45.000	.60270	.03531	-.03905	-.01070	-.00035	.00248	.59607	.09588	-.00010	.00250
60.000	.62093	.03405	-.05909	-.01060	-.00045	.00247	.61435	.09539	-.00020	.00250
GRADIENT	.00435	.00030	-.00086	-.00012	-.00004	.00016	.00430	.00073	-.00002	.00016

CA20 747/0 01 SI AT38 AT39 CARRIER DATA (HGN042) (25 NOV 75)

REFERENCE DATA

SREF = 5500.0000 SQ.FT. XMRP = 1339.9000 IN.XC
LREF = 327.7800 IN. YMRP = .0000 IN.YC
BREF = 2348.0400 IN. ZMRP = 190.8000 IN.ZC
SCALE = .0300

PARAMETRIC DATA

ALPHAC =	8.000	BETAC =	.000
ELV-IB =	.000	ELV-OB =	3.000
ELEVON =	5.000	MACH =	.600
BETAO =	.000	PHI =	.000
DX =	.000	DY =	.000

RN/L = 3.33 GRADIENT INTERVAL = -1.00/ 4.00

ALPHAO = 16.000

DZ	CN	CA	CLM	CY	CBL	CYN	CL	CD	CSL	CLN
.000	.72897	.00041	.03574	-.01142	-.00043	.00187	.71240	.12316	-.00010	.00191
3.000	.73590	.00240	.03239	-.01092	-.00026	.00150	.72482	.12724	-.00000	.00152
7.500	.74531	.00517	.02607	-.01034	-.00007	.00105	.74350	.13314	.00011	.00105
15.000	.78673	.00624	-.00325	-.01156	-.00050	.00196	.77431	.13938	-.00016	.00202
30.000	.83401	.00569	-.05214	-.01284	-.00082	.00290	.82105	.14662	-.00032	.00300
45.000	.85526	.00534	-.07498	-.01206	-.00083	.00253	.84995	.15105	-.00039	.00264
60.000	.88112	.00587	-.08689	-.01141	-.00068	.00243	.85748	.15451	-.00025	.00251
GRADIENT	.00431	.00056	-.00112	.00016	.00005	-.00012	.00414	.00135	.00003	-.00013

CA20 747/0 01 S1 AT38 AT39 CARRIER DATA (HGN043) (25 NOV 75)

REFERENCE DATA

SREF =	5500.0000 SQ.FT.	XMRP =	1339.9000 IN.XC		
LREF =	327.7800 IN.	YMRP =	.0000 IN.YC		
BREF =	2348.0400 IN.	ZMRP =	190.8000 IN.ZC		
SCALE =	.0300				

PARAMETRIC DATA

ALPHAC =	4.000	BETAC =	-5.000
ELV-IB =	.000	ELV-OB =	3.000
ELEVON =	5.000	MACH =	.600
BETAO =	-5.000	PHI =	.000
DX =	.000	DY =	.000

RN/L = 3.34 GRADIENT INTERVAL = -1.00/ 4.00

ALPHAO = 12.000

DZ	CN	CA	CLM	CY	CBL	CYN	CL	CD	CSL	CLN
.000	.46035	.03300	.10044	.09719	.01601	-.01347	.45460	.07968	.01455	-.01503
3.000	.48377	.03211	.08248	.10382	.01781	-.01968	.47801	.08103	.01572	-.02139
7.500	.50905	.03240	.05304	.10094	.01856	-.02043	.50313	.08385	.01639	-.02221
15.000	.53874	.03286	.01439	.09466	.01859	-.01813	.53265	.08719	.01666	-.01992
30.000	.57762	.03196	-.02778	.08909	.01814	-.01544	.57144	.09009	.01649	-.01720
45.000	.60333	.03021	-.05045	.09170	.01925	-.01706	.59721	.09089	.01743	-.01891
60.000	.61931	.02898	-.06575	.09230	.01947	-.01753	.61325	.09110	.01760	-.01940
GRADIENT	.00781	-.00030	-.00598	.00221	.00060	-.00207	.00780	.00047	.00039	-.00212

CA20 747/0 02 S1 AT38 AT39 CARRIER DATA (HGN044) (25 NOV 75)

REFERENCE DATA

SREF =	5500.0000 SQ.FT.	XMRP =	1339.9000 IN.XC		
LREF =	327.7800 IN.	YMRP =	.0000 IN.YC		
BREF =	2348.0400 IN.	ZMRP =	190.8000 IN.ZC		
SCALE =	.0300				

PARAMETRIC DATA

ALPHAC =	4.000	BETAC =	-5.000
ELV-IB =	.000	ELV-OB =	3.000
ELEVON =	5.000	MACH =	.600
BETAO =	-5.000	PHI =	.000
DX =	.000	DY =	.000

RN/L = 3.33 GRADIENT INTERVAL = -1.00/ 4.00

ALPHAO = 12.000

DZ	CN	CA	CLM	CY	CBL	CYN	CL	CD	CSL	CLN
.000	.45075	.03352	.09501	.09081	.01534	-.00972	.44500	.07921	.01428	-.01123
3.000	.47516	.03353	.07778	.09612	.01673	-.01466	.46928	.08167	.01515	-.01628
7.500	.50332	.03367	.04479	.09557	.01728	-.01652	.49730	.08460	.01552	-.01819
15.000	.53502	.03338	.00559	.09172	.01757	-.01564	.52888	.08742	.01590	-.01734
30.000	.57525	.03201	-.03374	.09340	.01879	-.01728	.56907	.08983	.01695	-.01909
45.000	.60060	.03063	-.05473	.09305	.01935	-.01764	.59445	.09105	.01748	-.01950
60.000	.61751	.02943	-.06872	.09329	.01949	-.01782	.61140	.09160	.01760	-.01970
GRADIENT	.00814	.00000	-.00574	.00177	.00046	-.00165	.00809	.00082	.00029	-.00168

ORIGINAL PAGE IS
OF POOR QUALITY

CA20 747/1 01 S1 AT38 AT39 CARRIER DATA (MGN045) (25 NOV 75)

REFERENCE DATA

SREF = 5500.0000 SQ.FT. XMRP = 1339.9000 IN.XC
LREF = 327.7800 IN. YMRP = .0000 IN.YC
BREF = 2348.0400 IN. ZMRP = 190.8000 IN.ZC
SCALE = .0300

PARAMETRIC DATA

ALPHAC =	.000	BETAC =	.000
ELV-IB =	.000	ELV-OB =	3.000
ELEVON =	5.000	MACH =	.600
BETAO =	.000	PHI =	.000
DX =	.000	DY =	.000

RN/L = 3.23 GRADIENT INTERVAL = -1.00/ 4.00

ALPHAO = 8.000

DZ	CN	CA	CLM	CY	CBL	CYN	CL	CD	CSL	CLN
.000	.03348	.03406	.22949	-.00627	.00076	-.00002	.03018	.09517	.00076	-.00005
3.000	.04435	.09499	.21384	-.00647	.00089	.00023	.04101	.09548	.00089	.00020
7.500	.05744	.09536	.20062	-.00793	.00059	.00121	.05408	.09730	.00073	.00118
15.000	.07830	.09714	.16041	-.00843	.00054	.00172	.07488	.09979	.00060	.00170
30.000	.10985	.09777	.11135	-.00924	.00034	.00218	.10642	.10149	.00041	.00217
45.000	.13185	.09745	.08766	-.01035	.00005	.00273	.12843	.10191	.00015	.00272
60.000	.17337	.09367	.04861	-.01377	-.00040	.00418	.17012	.09845	-.00026	.00419
GRADIENT	.00382	.00031	-.00522	-.00007	.00004	.00008	.00361	.00044	.00004	.00008

CA20 747/1 01 S1 AT38 AT39 CARRIER DATA (MGN046) (25 NOV 75)

REFERENCE DATA

SREF = 5500.0000 SQ.FT. XMRP = 1339.9000 IN.XC
LREF = 327.7800 IN. YMRP = .0000 IN.YC
BREF = 2348.0400 IN. ZMRP = 190.8000 IN.ZC
SCALE = .0300

PARAMETRIC DATA

ALPHAC =	4.000	BETAC =	.000
ELV-IB =	.000	ELV-OB =	3.000
ELEVON =	5.000	MACH =	.600
BETAO =	.000	PHI =	.000
DX =	.000	DY =	.000

RN/L = 3.33 GRADIENT INTERVAL = -1.00/ 4.00

ALPHAO = 12.000

DZ	CN	CA	CLM	CY	CBL	CYN	CL	CD	CSL	CLN
.000	.32609	.06138	.14975	-.00575	.00050	-.00036	.31805	.09459	.00046	-.00041
3.000	.33336	.06176	.14954	-.00633	.00035	.00014	.32723	.09590	.00036	.00010
7.500	.35315	.06293	.12821	-.00723	.00016	.00073	.34482	.09886	.00023	.00071
15.000	.38306	.05418	.08254	-.00854	-.00003	.00149	.37447	.10310	.00012	.00148
30.000	.42645	.06294	.03200	-.00920	-.00050	.00224	.41778	.10821	-.00027	.00228
45.000	.46561	.06118	.00300	-.00921	-.00053	.00218	.44700	.10733	-.00031	.00222
60.000	.47254	.05009	-.01601	-.00903	-.00051	.00207	.46405	.10754	-.00030	.00211
GRADIENT	.00309	.00013	-.00007	-.00019	-.00005	.00017	.00305	.00044	-.00003	.00017

CA20 747/1 01 S1 AT38 AT39 CARRIER DATA (HGN047) (25 NOV 75)

REFERENCE DATA

SREF = 5500.0000 SQ.FT. XMRP = 1339.9000 IN.XC
LREF = 327.7800 IN. YMRP = .0000 IN.YC
BREF = 2348.0400 IN. ZMRP = 190.8000 IN.ZC
SCALE = .0300

PARAMETRIC DATA

ALPHAC =	8.000	BETAC =	.000
ELV-IB =	.000	ELV-OB =	3.000
ELEVON =	5.000	MACH =	.600
BETAO =	.000	PHI =	.000
DX =	.000	DY =	.000

RN/L = 3.25 GRADIENT INTERVAL = -1.00/ 4.00

ALPHAO = 16.000

DZ	CN	CA	CLM	CY	CBL	CYN	CL	CD	CSL	CLN
.000	.63153	.01894	.06048	-.00973	.00006	.00047	.61912	.12601	.00014	.00045
3.000	.64587	.01948	.05852	-.00959	-.00013	.00087	.63317	.12893	.00002	.00088
7.500	.66378	.02161	.04525	-.00883	-.00016	.00042	.65047	.13401	-.00008	.00044
15.000	.69323	.02116	.01834	-.01094	-.00069	.00182	.67960	.13944	-.00037	.00191
30.000	.74409	.01958	-.02218	-.01224	-.00118	.00276	.73002	.14531	-.00069	.00292
45.000	.78006	.01815	-.04424	-.01181	-.00135	.00262	.76575	.14982	-.00089	.00281
60.000	.80259	.01809	-.05684	-.01144	-.00149	.00229	.78798	.15348	-.00108	.00251
GRADIENT	.00478	.00018	-.00065	.00005	-.00006	.00013	.00468	.00097	-.00004	.00014

CA20 747/1 01 S1 AT38 AT39 CARRIER DATA (HGN048) (25 NOV 75)

REFERENCE DATA

SREF = 5500.0000 SQ.FT. XMRP = 1339.9000 IN.XC
LREF = 327.7800 IN. YMRP = .0000 IN.YC
BREF = 2348.0400 IN. ZMRP = 190.8000 IN.ZC
SCALE = .0300

PARAMETRIC DATA

ALPHAC =	4.000	BETAC =	-5.000
ELV-IB =	.000	ELV-OB =	3.000
ELEVON =	5.000	MACH =	.600
BETAO =	-5.000	PHI =	.000
DX =	.000	DY =	.000

RN/L = 3.34 GRADIENT INTERVAL = -1.00/ 4.00

ALPHAO = 12.000

DZ	CN	CA	CLM	CY	CBL	CYN	CL	CD	CSL	CLN
.000	.32356	.05922	.14608	.09660	.01284	-.01263	.31577	.09214	.01147	-.01388
3.000	.34564	.05816	.11791	.10511	.01488	-.01970	.33785	.09331	.01278	-.02112
7.500	.36661	.05866	.08935	.10136	.01554	-.02008	.35967	.09591	.01340	-.02156
15.000	.39256	.05926	.05158	.09687	.01567	-.01878	.38444	.09809	.01367	-.02029
30.000	.43042	.05792	.01261	.09190	.01528	-.01681	.42227	.10153	.01341	-.01828
45.000	.45529	.05803	-.00978	.09485	.01596	-.01881	.44722	.10210	.01396	-.02034
60.000	.47139	.05425	-.02134	.09484	.01624	-.01926	.46343	.10191	.01420	-.02081
GRADIENT	.00736	-.00035	-.00939	.00284	.00069	-.00236	.00736	.00039	.00044	-.00241

ORIGINAL PAGE IS OF POOR QUALITY

CA20 747/1 01 SI CARRIER DATA (MGN049) (25 NOV 75)

REFERENCE DATA

SREF = 5500.0000 SQ.FT. XMRP = 1339.9000 IN.XC
LREF = 327.7800 IN. YMRP = .0000 IN.YC
EREF = 2348.0400 IN. ZMRP = 190.8000 IN.ZC
SCALE = .0300

PARAMETRIC DATA

DETAC =	.000	ELV-IB =	.000
ELV-OB =	3.000	ELEVON =	5.000
MACH =	.600	BETAO =	.000
PHI =	.000	DY =	.000
ALPHAC =	.000	DX =	.000

RN/L = 3.24 GRADIENT INTERVAL = .00/ 12.00

ALPHAO = 6.000

DZ	CN	CA	CLM	CY	CBL	CYN	CL	CD	CSL	CLN
.000	.09395	.09032	.11977	-.00598	.00099	.00019	.09074	.09355	.00100	.00016
3.000	.09480	.09051	.12746	-.00567	.00093	.00034	.09158	.09376	.00094	.00031
7.500	.10407	.09030	.11456	-.00634	.00072	.00085	.10085	.09328	.00074	.00083
15.000	.12007	.09037	.08755	-.00773	.00048	.00158	.11684	.09451	.00054	.00157
30.000	.14625	.08962	.05188	-.00797	.00008	.00217	.14303	.09467	.00015	.00216
45.000	.17381	.08501	.01384	-.01098	-.00150	.00204	.17070	.09202	-.00143	.00209
60.000	.20948	.05547	.00990	-.02956	-.00744	-.00693	.20742	.06274	-.00768	-.00657
GRADIENT	.00140	-.00001	-.00087	-.00006	-.00004	.00009	.00140	.00004	-.00003	.00009

RN/L = 3.31 GRADIENT INTERVAL = .00/ 12.00

ALPHAO = 10.000

DZ	CN	CA	CLM	CY	CBL	CYN	CL	CD	CSL	CLN
.000	.00445	.08331	.28947	-.00658	.00102	.00003	.00152	.08392	.00102	-.00000
3.000	.01473	.08491	.27179	-.00663	.00097	.00024	.01181	.08538	.00098	.00020
7.500	.02934	.08553	.24922	-.00613	.00066	.00044	.02633	.08650	.00068	.00041
15.000	.05422	.08782	.18544	-.00759	.00063	.00141	.06111	.09001	.00069	.00138
30.000	.10490	.08908	.11490	-.00846	.00005	.00202	.10173	.09269	.00012	.00201
45.000	.13251	.08835	.09157	-.00811	.00007	.00193	.12934	.09292	.00014	.00192
60.000	.16381	.08621	.05946	-.00604	.00066	.00090	.16070	.09187	.00069	.00088
GRADIENT	.00331	.00022	-.00534	.00006	-.00005	.00005	.00330	.00034	-.00005	.00005

RN/L = 3.27 GRADIENT INTERVAL = .00/ 12.00

ALPHAO = 14.000

DZ	CN	CA	CLM	CY	CBL	CYN	CL	CD	CSL	CLN
.000	-.08382	.08269	.34758	-.00511	.00058	-.00077	-.08666	.08032	.00056	-.00079
3.000	-.05398	.08326	.34751	-.00493	.00065	-.00061	-.05985	.08122	.00062	-.00063
7.500	-.04581	.08398	.34480	-.00546	.00058	.00001	-.04871	.08233	.00058	-.00001
15.000	-.01162	.08572	.29402	-.00569	.00053	.00042	-.01460	.08566	.00055	.00040
30.000	.05370	.08803	.18315	-.00769	.00029	.00168	.05060	.08985	.00035	.00167
45.000	.09336	.08884	.12586	-.00871	.00002	.00237	.09020	.09204	.00010	.00237
60.000	.11711	.08539	.09653	-.00994	-.00035	.00330	.11393	.09302	-.00025	.00332
GRADIENT	.00241	.00018	-.00039	-.00005	-.00000	.00011	.00240	.00027	.00000	.00011

CA20 747/1 01 S1 CARRIER DATA (MGN050) (25 NOV 75)

REFERENCE DATA

SREF = 5500.0000 SQ.FT. XMRP = 1339.9000 IN.XC
LREF = 327.7800 IN. YMRP = .0000 IN.YC
BREF = 2348.0400 IN. ZMRP = 190.8000 IN.ZC
SCALE = .0300

PARAMETRIC DATA

BETAC =	.000	ELV-IB =	.000
ELV-OB =	3.000	ELEVON =	5.000
MACH =	.600	BETAO =	.000
PHI =	.000	DY =	.000
ALPHAC =	.000	DX =	10.000

RN/L = 3.25 GRADIENT INTERVAL = .00/ 12.00

ALPHAO = 6.000

DZ	CN	CA	CLM	CY	CBL	CYN	CL	CD	CSL	CLN
.000	.10718	.08912	.09987	-.00560	.00088	.00000	.10401	.09281	.00088	-.00003
3.000	.10807	.08943	.10277	-.00508	.00081	.00010	.10488	.09315	.00081	.00007
7.500	.11426	.08963	.09425	-.00699	.00055	.00112	.11106	.09356	.00059	.00110
15.000	.12838	.09007	.07188	-.00690	.00066	.00131	.12515	.09450	.00070	.00129
30.000	.14655	.08890	.04851	-.00913	.00029	.00194	.14336	.09396	.00035	.00193
45.000	.12873	.08979	.01263	-.04050	-.01070	.01452	.12551	.09423	-.01018	.01488
60.000	-.02933	.09540	-.00774	-.18898	-.05846	.05963	-.03264	.09432	-.05599	.07163
GRADIENT	.00098	.00007	-.00084	-.00020	-.00004	.00016	.00097	.00010	-.00004	.00016

RN/L = 3.25 GRADIENT INTERVAL = .00/ 12.00

ALPHAO = 10.000

DZ	CN	CA	CLM	CY	CBL	CYN	CL	CD	CSL	CLN
.000	.03782	.08175	.25625	-.00432	.00117	-.00078	.03494	.08302	.00114	-.00082
3.000	.04066	.08335	.25383	-.00469	.00084	-.00043	.03773	.08472	.00093	-.00045
7.500	.04850	.08518	.23652	-.00582	.00072	.00037	.04650	.08685	.00073	.00034
15.000	.07566	.08745	.17642	-.00697	.00070	.00131	.07257	.09004	.00074	.00128
30.000	.11054	.08839	.11184	-.00789	.00032	.00208	.10739	.09220	.00039	.00207
45.000	.12928	.08819	.08097	-.01065	-.00053	.00305	.12612	.09265	-.00042	.00307
60.000	.13962	.08801	.05320	-.01834	-.00318	.00600	.13647	.09283	-.00296	.00611
GRADIENT	.00159	.00045	-.00273	-.00020	-.00006	.00016	.00157	.00051	-.00005	.00016

RN/L = 3.23 GRADIENT INTERVAL = .00/ 12.00

ALPHAO = 14.000

DZ	CN	CA	CLM	CY	CBL	CYN	CL	CD	CSL	CLN
.000	-.03020	.07759	.37771	-.00205	.00145	-.00151	-.03289	.07649	.00139	-.00156
3.000	-.02213	.07893	.35843	-.00347	.00120	-.00091	-.02487	.07811	.00117	-.00085
7.500	-.01570	.08204	.34331	-.00336	.00112	-.00076	-.01856	.08145	.00110	-.00080
15.000	.01403	.08304	.28160	-.00563	.00086	.00069	.01112	.08348	.00089	.00066
30.000	.05721	.08787	.17802	-.00614	.00055	.00128	.05410	.09016	.00060	.00126
45.000	.10026	.08768	.12699	-.00691	.00063	.00187	.09714	.09112	.00070	.00184
60.000	.12642	.08767	.09675	-.00322	.00199	.00052	.12328	.09203	.00200	.00045
GRADIENT	.00189	.00060	-.00449	-.00016	-.00004	.00009	.00187	.00067	-.00004	.00009

CA20 747/1 01 SI CARRIER DATA (HGN051) (25 NOV 75)

REFERENCE DATA

SREF = 5500.0000 SQ.FT. XMRP = 1339.9000 IN.XC
LREF = 327.7800 IN. YMRP = .0000 IN.YC
BREF = 2348.0400 IN. ZMRP = 190.8000 IN.ZC
SCALE = .0300

PARAMETRIC DATA

BETAC =	.000	ELV-IB =	.000
ELV-OB =	3.000	ELEVON =	5.000
MACH =	.600	BETAO =	.000
PHI =	.000	DY =	.000
ALPHAC =	.000	DX =	20.000

RN/L = 3.24 GRADIENT INTERVAL = .00/ 12.00

ALPHAO = 6.000

DZ	CN	CA	CLM	CY	CBL	CYN	CL	CD	CSL	CLN
.000	.11674	.08710	.08235	-.00594	.00045	.00045	.11363	.09112	.00047	.00043
3.000	.12119	.08784	.07030	-.00451	.00075	.00018	.11805	.09202	.00076	.00015
7.500	.12714	.08827	.06216	-.00499	.00072	.00042	.12398	.09265	.00073	.00040
15.000	.13668	.08850	.05010	-.00645	.00056	.00101	.13347	.09382	.00060	.00099
30.000	.14896	.08842	.04053	-.00795	-.00007	.00173	.14579	.09357	-.00001	.00173
45.000	.16559	.08589	-.05300	-.00400	.00215	.00119	.16213	.10231	.00219	.00112
60.000	.23701	.12628	-.38523	.01533	.01248	-.00248	.23243	.13622	.01238	-.00291
GRADIENT	.00138	.00015	-.00262	.00011	.00003	.00000	.00138	.00020	.00003	.00000

RN/L = 3.25 GRADIENT INTERVAL = .00/ 12.00

ALPHAO = 10.000

DZ	CN	CA	CLM	CY	CBL	CYN	CL	CD	CSL	CLN
.000	.08893	.08285	.23484	-.00019	.00098	-.00111	.05600	.08486	.00094	-.00114
3.000	.09130	.08303	.23257	-.00352	.00091	-.00037	.05937	.08511	.00089	-.00040
7.500	.07026	.08427	.21122	-.00545	.00076	.00030	.06728	.08567	.00077	.00027
15.000	.08064	.08559	.15944	-.00555	.00057	.00077	.08757	.08970	.00060	.00075
30.000	.11914	.08748	.10515	-.00780	.00026	.00205	.11601	.09159	.00033	.00204
45.000	.13551	.08794	.07589	-.00842	.00002	.00230	.13246	.09262	.00010	.00230
60.000	.15106	.08957	.03778	-.00997	-.00048	.00303	.14784	.09478	-.00039	.00305
GRADIENT	.00155	.00020	-.00327	-.00068	-.00003	.00018	.00154	.00025	-.00002	.00019

RN/L = 3.28 GRADIENT INTERVAL = .00/ 12.00

ALPHAO = 14.000

DZ	CN	CA	CLM	CY	CBL	CYN	CL	CD	CSL	CLN
.000	.01079	.09040	.26912	-.01279	-.00100	.00266	.00763	.09072	-.00091	.00269
3.000	.00770	.08267	.32050	-.00667	.00030	.00070	.00481	.08289	.00032	.00069
7.500	.01324	.07942	.33235	-.00270	.00107	-.00055	.01046	.07964	.00105	-.00059
15.000	.03984	.08303	.26223	-.00433	.00076	.00020	.03692	.08437	.00077	.00017
30.000	.08225	.09534	.17129	-.00634	.00042	.00142	.07919	.08916	.00047	.00140
45.000	.10731	.08683	.12574	-.00723	.00027	.00192	.10422	.09052	.00033	.00191
60.000	.12549	.08517	.10733	-.00704	.00021	.00183	.12041	.09043	.00027	.00182
GRADIENT	.00040	-.00140	.00797	.00131	.00027	-.00042	.00045	-.00139	.00025	-.00043

CA20 747/1 01 S1 CARRIER DATA (MGN052) (25 NOV 75)

REFERENCE DATA

SREF = 5500.0000 SQ.FT. XMRP = 1339.9000 IN.XC
LREF = 327.7800 IN. YMRP = .0000 IN.YC
BREF = 2348.0400 IN. ZMRP = 190.8000 IN.ZC
SCALE = .0300

PARAMETRIC DATA

ELV-IB = .000 ELV-OB = 3.000
ELEVON = 5.000 MACH = .600
BETAO = .000 BETAC = .000
PHI = .000 DY = .000
DX = .000 ALPHAC = 4.000

RN/L = 3.22 GRADIENT INTERVAL = .00/ 12.00

ALPHAO = 6.000

DZ	CN	CA	CLM	CY	CBL	CYN	CL	CD	CSL	CLN
.000	.48392	.05582	-.06327	-.00897	.00023	.00090	.47543	.10610	.00033	.00087
3.000	.48766	.05489	-.06006	-.00922	.00008	.00131	.47925	.10557	.00022	.00130
7.500	.49457	.05389	-.06157	-.00968	-.00007	.00180	.48623	.10529	.00012	.00180
15.000	.50390	.05265	-.06591	-.01029	-.00033	.00245	.49564	.10503	-.00007	.00247
30.000	.52223	.04951	-.06613	-.01092	-.00034	.00268	.51420	.10382	-.00006	.00270
45.000	.54133	.04712	-.07162	-.01207	-.00054	.00385	.53344	.10345	-.00014	.00389
60.000	.56409	.04923	-.14880	-.01385	-.00406	.00905	.55585	.10793	-.00309	.00943
GRADIENT	.00143	-.00026	.00018	-.00010	-.00004	.00012	.00145	-.00010	-.00003	.0001

RN/L = 3.24 GRADIENT INTERVAL = .00/ 12.00

ALPHAO = 10.000

DZ	CN	CA	CLM	CY	CBL	CYN	CL	CD	CSL	CLN
.000	.40208	.05442	.06779	-.00647	.00054	-.00041	.39419	.09615	.00050	-.00047
3.000	.41334	.05415	.05245	-.00711	.00036	.00017	.40542	.09706	.00037	.00013
7.500	.42876	.05378	.03213	-.00801	.00011	.00097	.42079	.09830	.00021	.00095
15.000	.45139	.05291	.00103	-.00867	-.00006	.00153	.44339	.09980	.00010	.00153
30.000	.48226	.05089	-.02897	-.00994	-.00041	.00218	.47430	.10102	-.00018	.00221
45.000	.50259	.04924	-.04679	-.01026	-.00068	.00251	.49469	.10150	-.00041	.00257
60.000	.52342	.04787	-.07102	-.01071	-.00151	.00322	.51555	.10232	-.00117	.00336
GRADIENT	.00355	-.00089	-.00474	-.00020	-.00006	.00018	.00354	.00029	-.00004	.00019

RN/L = 3.24 GRADIENT INTERVAL = .00/ 12.00

ALPHAO = 14.000

DZ	CN	CA	CLM	CY	CBL	CYN	CL	CD	CSL	CLN
.000	.32250	.05185	.17223	-.00635	.00078	-.00078	.31531	.08527	.00069	-.00086
3.000	.33241	.05183	.16117	-.00774	.00037	.00019	.32517	.08629	.00039	.00015
7.500	.35069	.05280	.13760	-.00835	.00012	.00088	.34316	.08816	.00022	.00096
15.000	.38719	.05409	.08195	-.00852	.00001	.00117	.37942	.09427	.00013	.00117
30.000	.43746	.05271	.01974	-.01021	-.00053	.00232	.42955	.09915	-.00028	.00235
45.000	.46853	.05062	-.01007	-.01015	-.00046	.00235	.46058	.09932	-.00021	.00239
60.000	.48968	.04883	-.02264	-.01017	-.00009	.00216	.48190	.09974	.00014	.00216
GRADIENT	.00377	.00013	-.00467	-.00026	-.00008	.00022	.00374	.00053	-.00006	.00022

CA20 747/1 01 S1 CARRIER DATA (MGN053) (25 NOV 75)

REFERENCE DATA

SREF = 5500.0000 SQ.FT. XMRP = 1339.9000 IN.XC
LREF = 327.7800 IN. YMRP = .0000 IN.YC
BREF = 2348.0400 IN. ZMRP = 190.8000 IN.ZC
SCALE = .0300

PARAMETRIC DATA

ELV-IB =	.000	ELV-OB =	3.000
ELEVON =	5.000	MACH =	.600
BETAO =	.000	BETAC =	.000
PHI =	.000	DY =	.000
DX =	10.000	ALPHAC =	4.000

RN/L = 3.27 GRADIENT INTERVAL = .00/ 12.00

ALPHAO = 6.000

DZ	CN	CA	CLM	CY	CBL	CYN	CL	CD	CSL	CLN
.000	.49261	.05387	-.07918	-.00794	.00003	.00061	.48528	.10517	.00010	.00060
3.000	.48559	.05342	-.07381	-.00860	-.00003	.00118	.48729	.10493	.00010	.00118
7.500	.50028	.05275	-.07348	-.00931	-.00017	.00171	.49203	.10476	.00001	.00172
15.000	.50870	.05157	-.07629	-.00958	-.00035	.00195	.50052	.10446	-.00014	.00198
30.000	.52555	.04934	-.08213	-.00991	-.00056	.00225	.51752	.10400	-.00042	.00231
45.000	.54754	.05059	-.17211	-.00842	-.00499	.00444	.53925	.10755	-.00450	.00494
60.000	.58169	.05924	-.44183	-.00162	-.01729	.01004	.57231	.11972	-.01614	.01179
GRADIENT	.00090	-.00015	.00071	-.00018	-.00003	.00014	.00091	-.00005	-.00001	.00015

RN/L = 3.23 GRADIENT INTERVAL = .00/ 12.00

ALPHAO = 10.000

DZ	CN	CA	CLM	CY	CBL	CYN	CL	CD	CSL	CLN
.000	.43272	.05144	.04351	-.00900	.00025	.00037	.42497	.09639	.00029	.00034
3.000	.43488	.05191	.04589	-.00987	.00001	.00112	.42708	.09709	.00013	.00111
7.500	.44659	.05188	.02331	-.01092	-.00029	.00201	.43872	.09827	-.00008	.00203
15.000	.46448	.05149	-.00358	-.01127	-.00061	.00250	.45655	.09976	-.00035	.00255
30.000	.49077	.04968	-.03334	-.01193	-.00071	.00284	.48289	.10071	-.00041	.00290
45.000	.50836	.04850	-.05264	-.01148	-.00105	.00226	.50051	.10139	-.00073	.00305
60.000	.52407	.04793	-.08004	-.01133	-.00192	.00329	.51619	.10245	-.00156	.00347
GRADIENT	.00191	.00005	-.00288	-.00025	-.00007	.00022	.00189	.00025	-.00005	.00022

RN/L = 3.23 GRADIENT INTERVAL = .00/ 12.00

ALPHAO = 14.000

DZ	CN	CA	CLM	CY	CBL	CYN	CL	CD	CSL	CLN
.000	.36578	.04627	.17903	-.00746	.00069	-.00056	.35695	.08405	.00063	-.00063
3.000	.36639	.04738	.17755	-.00939	.00017	.00057	.35943	.08542	.00024	.00065
7.500	.38031	.04940	.14850	-.01036	-.00015	.00160	.37306	.08888	.00002	.00160
15.000	.40097	.05113	.08537	-.01131	-.00041	.00244	.40239	.09370	-.00016	.00247
30.000	.43130	.05048	.01979	-.01224	-.00078	.00302	.44355	.09739	-.00046	.00309
45.000	.47779	.04804	-.00899	-.01146	-.00060	.00277	.47004	.09972	-.00031	.00282
60.000	.49497	.04784	-.02019	-.01137	-.00022	.00254	.48726	.09931	.00004	.00254
GRADIENT	.00227	.00042	-.00426	-.00037	-.00011	.00028	.00222	.00065	-.00008	.00029

ORIGINAL PAGE IS
OF POOR QUALITY

CA20 747/1 01 S1 CARRIER DATA (HGN054) (25 NOV 75)

REFERENCE DATA

SREF = 5500.0000 SQ.FT. XMRP = 1339.8000 IN.XC
LREF = 327.7800 IN. YMRP = .0000 IN.YC
BREF = 2348.0400 IN. ZMRP = 190.8000 IN.ZC
SCALE = .0300

PARAMETRIC DATA

ELV-IB =	.000	ELV-OB =	3.000
ELEVON =	5.000	MACH =	.600
BETAO =	.000	PHI =	.000
DY =	.000	BETAC =	.000
DX =	20.000	ALPHAC =	4.000

RN/L = 3.25 GRADIENT INTERVAL = .00/ 12.00

ALPHAO = 6.000

DZ	CN	CA	CLM	CY	CBL	CYN	CL	CD	CSL	CLN
.000	.50206	.05161	-.10473	-.00779	.00006	.00041	.49391	.10380	.00010	.00040
3.000	.50368	.05148	-.09995	-.00825	-.00004	.00082	.49554	.10385	.00004	.00082
7.500	.50688	.05125	-.09593	-.00868	-.00017	.00124	.49874	.10395	-.00004	.00125
15.000	.51289	.05059	-.09350	-.00894	-.00027	.00159	.50479	.10393	-.00010	.00161
30.000	.52482	.04856	-.08537	-.00996	-.00051	.00208	.51687	.10315	-.00029	.00212
45.000	.53546	.04773	-.09096	-.01107	-.00146	.00350	.52754	.10344	-.00109	.00363
60.000	.54094	.05140	-.12627	-.01217	-.00267	.00835	.53260	.10765	-.00178	.00858
GRADIENT	.00065	-.00005	.00115	-.00012	-.00003	.00011	.00065	.00002	-.00002	.00011

RN/L = 3.27 GRADIENT INTERVAL = .00/ 12.00

ALPHAO = 10.000

DZ	CN	CA	CLM	CY	CBL	CYN	CL	CD	CSL	CLN
.000	.45033	.04883	.04374	-.00297	-.00001	.00121	.44276	.09563	.00012	.00121
3.000	.45564	.04918	.03218	-.01058	-.00020	.00163	.44800	.09654	-.00003	.00164
7.500	.46445	.04968	.00832	-.01151	-.00050	.00225	.45671	.09796	-.00036	.00230
15.000	.47804	.04984	-.01197	-.01237	-.00069	.00280	.47022	.09953	-.00040	.00285
30.000	.49889	.04852	-.03787	-.01196	-.00095	.00291	.49109	.10040	-.00054	.00299
45.000	.51306	.04737	-.04691	-.01145	-.00072	.00284	.50530	.10074	-.00042	.00290
60.000	.52570	.04649	-.05029	-.01026	.00003	.00271	.51796	.10118	.00032	.00269
GRADIENT	.00189	.00011	-.00477	-.00021	-.00008	.00014	.00187	.00031	-.00007	.00015

RN/L = 3.27 GRADIENT INTERVAL = .00/ 12.00

ALPHAO = 14.000

DZ	CN	CA	CLM	CY	CBL	CYN	CL	CD	CSL	CLN
.000	.38423	.04562	.19732	-.00959	-.00005	.00074	.37735	.08554	.00003	.00074
3.000	.39238	.04591	.18328	-.00935	.00015	.00103	.39543	.08667	.00026	.00101
7.500	.40800	.04718	.14068	-.01049	-.00021	.00174	.40083	.08957	-.00002	.00175
15.000	.43158	.04891	.08241	-.01186	-.00058	.00273	.42410	.09376	-.00029	.00277
30.000	.46470	.04884	.02028	-.01202	-.00097	.00304	.45705	.09715	-.00065	.00312
45.000	.48524	.04819	-.00899	-.01190	-.00106	.00310	.47754	.09865	-.00073	.00319
60.000	.50201	.04753	-.03128	-.01126	-.00123	.00269	.49429	.09974	-.00094	.00281
GRADIENT	.00319	.00021	-.00770	-.00013	-.00003	.00013	.00315	.00055	-.00001	.00014

CA20 747/1 01 S1 CARRIER DATA (HGN055) (25 NOV 75)

REFERENCE DATA

SREF = 5500.0000 SQ.FT. XMRP = 1339.9000 IN.XC
LREF = 327.7800 IN. YMRP = .0000 IN.YC
BREF = 2348.0400 IN. ZMRP = 190.8000 IN.ZC
SCALE = .0300

PARAMETRIC DATA

ELV-IB =	.000	ELV-OB =	3.000
ELEVON =	5.000	MACH =	.600
BETAO =	.000	BETAC =	.000
PHI =	.000	DY =	.000
DX =	.000	ALPHAC =	8.000

RN/L = 3.22 GRADIENT INTERVAL = .00/ 2.00

ALPHAO = 6.000

DZ	CN	CA	CLM	CY	CBL	CYN	CL	CD	CSL	CLN
.000	.89684	.01051	-.15639	-.01124	-.00117	.00129	.87154	.16435	-.00093	.00148
3.000	.88202	.00977	-.14517	-.01056	-.00121	.00162	.85692	.16278	-.00091	.00181
7.500	.88157	.00979	-.13430	-.01104	-.00137	.00198	.85648	.16273	-.00100	.00219
15.000	.89434	.00835	-.12130	-.01188	-.00154	.00251	.86946	.16179	-.00108	.00274
30.000	.89908	.00748	-.10479	-.01106	-.00160	.00258	.87427	.16176	-.00113	.00281
45.000	.90693	.00722	-.03322	-.01093	-.00091	.00344	.89189	.16460	-.00030	.00355
60.000	.92975	.01245	.26434	-.01273	.00697	.00704	.91347	.17371	.00809	.00572
GRADIENT	-.00065	-.00009	.00290	.00002	-.00003	.00009	-.00063	-.00020	-.00001	.00009

RN/L = 3.25 GRADIENT INTERVAL = .00/ 12.00

ALPHAO = 10.000

DZ	CN	CA	CLM	CY	CBL	CYN	CL	CD	CSL	CLN
.000	.82057	.00892	-.10419	-.00920	-.00044	.00036	.80638	.15226	-.00037	.00043
3.000	.82397	.00940	-.09927	-.01006	-.00068	.00117	.80982	.15233	-.00047	.00127
7.500	.83101	.00857	-.09770	-.01157	-.00091	.00210	.81690	.15274	-.00054	.00223
15.000	.84112	.00740	-.08442	-.01194	-.00099	.00262	.82705	.15335	-.00052	.00275
30.000	.86049	.00640	-.09174	-.01200	-.00102	.00269	.84630	.15573	-.00051	.00301
45.000	.87408	.00603	-.08526	-.01155	-.00068	.00277	.85976	.15772	-.00019	.00264
60.000	.88541	.00661	-.06945	-.01087	.00003	.00273	.87081	.16026	.00051	.00269
GRADIENT	.00141	-.00018	.00082	-.00032	-.00006	.00023	.00142	.00007	-.00002	.00024

RN/L = 3.27 GRADIENT INTERVAL = .00/ 12.00

ALPHAO = 14.000

DZ	CN	CA	CLM	CY	CBL	CYN	CL	CD	CSL	CLN
.000	.73779	.00969	-.00020	-.00982	.00009	.00023	.72490	.13766	.00013	.00021
3.000	.74575	.00986	-.00108	-.01079	-.00016	.00096	.73271	.13921	.00001	.00098
7.500	.76313	.00898	-.02402	-.01135	-.00032	.00178	.74999	.14136	-.00001	.00181
15.000	.78566	.00761	-.04463	-.01275	-.00077	.00283	.77339	.14410	-.00026	.00292
30.000	.82172	.00606	-.06598	-.01317	-.00105	.00330	.80818	.14866	-.00046	.00343
45.000	.84552	.00551	-.07293	-.01224	-.00086	.00300	.83172	.15225	-.00033	.00310
60.000	.85378	.00545	-.08428	-.01219	-.00110	.00276	.84971	.15536	-.00060	.00291
GRADIENT	.00342	-.00010	-.00333	-.00020	-.00005	.00020	.00339	.00049	-.00002	.00021

CA20 747/1 01 SI CARRIER DATA (HGN056) (25 NOV 75)

REFERENCE DATA

SREF = 5500.0000 SQ.FT. XMRP = 1339.9000 IN.XC
LREF = 327.7800 IN. YMRP = .0000 IN.YC
BREF = 2348.0400 IN. ZMRP = 190.8000 IN.ZC
SCALE = .0300

PARAMETRIC DATA

ELV-IB =	.000	ELV-OB =	3.000
ELEVON =	5.000	MACH =	.600
BETAO =	.000	BETAC =	.000
PHI =	.000	DY =	.000
DX =	10.000	ALPHAC =	8.000

RN/L = 3.30 GRADIENT INTERVAL = .00/ 12.00

ALPHAO = 6.000

DZ	CN	CA	CLM	CY	CBL	CYN	CL	CD	CSL	CLN
.000	.88383	.00878	-.17865	-.00934	-.00087	.00078	.86888	.16212	-.00072	.00092
3.000	.88145	.00831	-.16760	-.00960	-.00110	.00132	.86662	.16125	-.00085	.00149
7.500	.88138	.00792	-.15224	-.01058	-.00141	.00199	.86661	.16085	-.00104	.00221
15.000	.88337	.00754	-.13545	-.01118	-.00148	.00241	.86864	.16083	-.00104	.00263
30.000	.88788	.00651	-.11266	-.01150	-.00163	.00265	.87326	.16059	-.00115	.00289
45.000	.88300	.00703	-.05882	-.01301	-.00042	.00362	.86835	.16026	.00021	.00354
60.000	.85300	.01302	.08778	-.01753	.00431	.00733	.83778	.16094	.00552	.00547
GRADIENT	-.00030	-.00011	.00351	-.00017	-.00007	.00016	-.00028	-.00016	-.00004	.00017

RN/L = 3.24 GRADIENT INTERVAL = .00/ 12.00

ALPHAO = 10.000

DZ	CN	CA	CLM	CY	CBL	CYN	CL	CD	CSL	CLN
.000	.83927	.00891	-.11283	-.01017	.00007	.00090	.82498	.15451	.00022	.00087
3.000	.84056	.00843	-.10607	-.01114	-.00021	.00173	.82632	.15426	.00010	.00174
7.500	.84455	.00767	-.10024	-.01214	-.00050	.00253	.83038	.15421	-.00006	.00258
15.000	.85234	.00721	-.09812	-.01228	-.00063	.00276	.83814	.15511	-.00014	.00283
30.000	.86663	.00624	-.09431	-.01293	-.00079	.00312	.85239	.15663	-.00024	.00321
45.000	.87743	.00613	-.08513	-.01221	-.00067	.00301	.86303	.15840	-.00014	.00308
60.000	.88415	.00519	-.06986	-.01116	-.00061	.00278	.86964	.15963	-.00012	.00284
GRADIENT	.00072	-.00017	.00165	-.00026	-.00008	.00021	.00074	-.00004	-.00004	.00022

RN/L = 3.23 GRADIENT INTERVAL = .00/ 12.00

ALPHAO = 14.000

DZ	CN	CA	CLM	CY	CBL	CYN	CL	CD	CSL	CLN
.000	.77599	.00808	.00584	-.01136	.00018	.00097	.76280	.14270	.00034	.00092
3.000	.78150	.00806	-.00150	-.01201	-.00004	.00169	.76822	.14365	.00026	.00167
7.500	.79214	.00747	-.01831	-.01266	-.00031	.00238	.77891	.14491	.00010	.00240
15.000	.80839	.00664	-.03625	-.01354	-.00069	.00315	.79496	.14691	-.00014	.00322
30.000	.83377	.00557	-.05996	-.01387	-.00095	.00348	.82014	.15027	-.00033	.00359
45.000	.85235	.00516	-.06623	-.01293	-.00084	.00333	.83851	.15309	-.00025	.00342
60.000	.86373	.00520	-.07151	-.01238	-.00083	.00308	.84978	.15511	-.00028	.00318
GRADIENT	.00217	-.00009	-.00326	-.00017	-.00007	.00019	.00215	.00029	-.00003	.00019

CA20 747/1 01 S1 CARRIER DATA (MGN057) (25 NOV 75)

REFERENCE DATA

SREF = 5500.0000 SQ.FT. XMRP = 1339.9000 IN.XC
LREF = 327.7800 IN. YMRP = .0000 IN.YC
BREF = 2348.0400 IN. ZMRP = 190.8000 IN.ZC
SCALE = .0300

PARAMETRIC DATA

ELV-IB =	.000	ELV-OB =	3.000
ELEVON =	5.000	MACH =	.600
BETAO =	.000	PHI =	.000
DY =	.000	BETAC =	.000
DX =	20.000	ALPHAC =	8.000

RN/L = 3.24 GRADIENT INTERVAL = .00/ 12.00

ALPHAO = 6.000

DZ	CN	CA	CLM	CY	CBL	CYN	CL	CD	CSL	CLN
.000	.86205	.00647	-.20698	-.00890	-.00092	.00044	.86752	.15954	-.00093	.00060
3.000	.87979	.00647	-.19077	-.00956	-.00113	.00100	.86530	.15915	-.00094	.00118
7.500	.87942	.00659	-.17209	-.01030	-.00127	.00155	.86491	.15920	-.00099	.00174
15.000	.88149	.00680	-.15129	-.01054	-.00133	.00202	.86592	.15977	-.00096	.00222
30.000	.88327	.00594	-.11625	-.01181	-.00139	.00265	.86866	.16012	-.00091	.00285
45.000	.89148	.00584	-.07669	-.01287	-.00212	.00336	.87674	.16154	-.00151	.00368
60.000	.94604	.00350	-.07061	-.01096	-.00880	.00345	.93000	.16794	-.00806	.00492
GRADIENT	-.00033	.00002	.00461	-.00018	-.00005	.00014	-.00033	-.00004	-.00002	.00015

RN/L = 3.27 GRADIENT INTERVAL = .00/ 12.00

ALPHAO = 10.000

DZ	CN	CA	CLM	CY	CBL	CYN	CL	CD	CSL	CLN
.000	.85915	.00587	-.12584	-.01120	-.00037	.00128	.83622	.15341	-.00014	.00133
3.000	.85061	.00607	-.11777	-.01242	-.00068	.00214	.83663	.15369	-.00029	.00223
7.500	.85480	.00602	-.11112	-.01276	-.00095	.00265	.84077	.15437	-.00048	.00278
15.000	.85806	.00599	-.10116	-.01383	-.00119	.00316	.84399	.15490	-.00062	.00332
30.000	.87022	.00544	-.09436	-.01362	-.00114	.00324	.85605	.15647	-.00055	.00339
45.000	.87973	.00611	-.08205	-.01295	-.00123	.00333	.85530	.15878	-.00063	.00350
60.000	.88393	.00557	-.07159	-.01144	-.00160	.00282	.85944	.15896	-.00109	.00305
GRADIENT	.00064	.00002	.00192	-.00020	-.00008	.00018	.00063	.00013	-.00004	.00019

RN/L = 3.29 GRADIENT INTERVAL = .00/ 12.00

ALPHAO = 14.000

DZ	CN	CA	CLM	CY	CBL	CYN	CL	CD	CSL	CLN
.000	.79777	.00603	.00606	-.01099	-.00024	.00110	.78461	.14447	-.00004	.00112
3.000	.80188	.00575	-.00336	-.01243	-.00054	.00208	.78969	.14491	-.00017	.00214
7.500	.80887	.00590	-.01643	-.01333	-.00066	.00292	.79556	.14627	-.00014	.00299
15.000	.82254	.00528	-.03431	-.01398	-.00084	.00340	.80913	.14803	-.00023	.00349
30.000	.84318	.00452	-.05282	-.01437	-.00117	.00366	.82959	.15087	-.00052	.00381
45.000	.85767	.00453	-.05948	-.01370	-.00097	.00368	.84385	.15339	-.00032	.00379
60.000	.85454	.00493	-.05719	-.01283	-.00053	.00346	.85055	.15493	.00007	.00350
GRADIENT	.00149	-.00001	-.00289	-.00030	-.00005	.00024	.00146	.00025	-.00001	.00024

CA20 747/1 01 S1 CARRIER DATA (HGN05B) (25 NOV 75)

REFERENCE DATA

SREF = 5500.0000 SQ.FT. XMRP = 1339.9000 IN.XC
LREF = 327.7800 IN. YMRP = .0000 IN.YC
BREF = 2348.0400 IN. ZMRP = 190.8000 IN.ZC
SCALE = .0300

PARAMETRIC DATA

ELV-IB = .000 ELV-OB = 3.000
ELEVON = 5.000 MACH = .600
BETAO = .000 BETAC = .000
PHI = .000 DY = 10.000
DX = .000 ALPHAC = 4.000

RN/L = 3.34 GRADIENT INTERVAL = .00/ 12.00

ALPHAO = 10.000

DZ	CN	CA	CLM	CY	CBL	CYN	CL	CD	CSL	CLN
.000	.42286	.05587	.01873	-.01629	.00841	-.00467	.41471	.09976	.00788	-.00553
3.000	.43162	.05550	.01525	-.01736	.00659	-.00215	.42345	.10031	.00533	-.00293
7.500	.44615	.05480	-.00094	-.02001	.00480	.00090	.43798	.10113	.00487	.00039
15.000	.46364	.05361	-.01702	-.02040	.00321	.00302	.45550	.10178	.00350	.00265
30.000	.49160	.05123	-.04291	-.02175	.00105	.00606	.48355	.10234	.00168	.00592
45.000	.51024	.04955	-.05477	-.01854	-.00002	.00564	.50226	.10262	.00057	.00561
60.000	.52776	.04799	-.06695	-.01505	-.00116	.00505	.51985	.10290	-.00062	.00514
GRADIENT	.00311	-.00014	-.00270	-.00050	-.00047	.00074	.00311	.00018	-.00039	.00078

RN/L = 3.24 GRADIENT INTERVAL = .00/ 12.00

ALPHAO = 14.000

DZ	CN	CA	CLM	CY	CBL	CYN	CL	CD	CSL	CLN
.000	.33419	.05363	.15106	-.02547	.01491	-.00881	.32675	.08826	.01390	-.01032
3.000	.34647	.05444	.13125	-.02243	.01298	-.00654	.33888	.09035	.01222	-.00786
7.500	.36691	.05498	.10245	-.02486	.00959	-.00119	.35916	.09304	.00941	-.00219
15.000	.39941	.05452	.05735	-.02880	.00557	.00454	.39152	.09597	.00601	.00394
30.000	.44646	.05272	.00257	-.03009	.00156	.00910	.43850	.09910	.00250	.00839
45.000	.47477	.05103	-.02425	-.02497	.00021	.00818	.46684	.10038	.00107	.00811
60.000	.49471	.04979	-.03997	-.01935	-.00028	.00613	.48679	.10123	.00037	.00612
GRADIENT	.00438	.00018	-.00647	.00003	-.00071	.00103	.00434	.00063	-.00060	.00110

CA20 747/1 01 S1 CARRIER DATA (MGN059) (25 NOV 75)

REFERENCE DATA

SREF = 5500.0000 SQ.FT. XMRP = 1339.9000 IN.XC
LREF = 327.7800 IN. YMRP = .0000 IN.YC
BREF = 2348.0400 IN. ZMRP = 190.8000 IN.ZC
SCALE = .0300

PARAMETRIC DATA

ELV-IB =	.000	ELV-OB =	3.000
ELEVON =	5.000	MACH =	.600
BETAO =	.000	BETAC =	.000
PHI =	.000	DY =	10.000
DX =	10.000	ALPHAC =	4.000

RN/L = 3.32 GRADIENT INTERVAL = .00/ 12.00

ALPHAO = 10.000

DZ	CN	CA	CLM	CY	CBL	CYN	CL	CD	CSL	CLN
.000	.44265	.05288	.01308	-.01223	.00696	-.00508	.43469	.08995	.00639	-.00578
3.000	.44788	.05334	.01068	-.01355	.00561	-.00284	.43989	.08957	.00528	-.00341
7.500	.46075	.05226	-.00517	-.01620	.00413	-.00082	.45276	.10014	.00410	-.00045
15.000	.47466	.05185	-.02165	-.01754	.00280	.00228	.46664	.10118	.00303	.00197
30.000	.49787	.04995	-.04149	-.02065	.00056	.00578	.48992	.10173	.00116	.00569
45.000	.51346	.04852	-.05763	-.01820	-.00037	.00549	.50556	.10203	.00021	.00550
60.000	.52693	.04750	-.07538	-.01552	-.00130	.00497	.51908	.10232	-.00077	.00508
GRADIENT	.00245	-.00009	-.00252	-.00053	-.00037	.00067	.00244	.00017	-.00030	.00071

RN/L = 3.25 GRADIENT INTERVAL = .00/ 12.00

ALPHAO = 14.000

DZ	CN	CA	CLM	CY	CBL	CYN	CL	CD	CSL	CLN
.000	.37845	.04834	.13234	-.01301	.01284	-.01051	.37128	.08813	.01167	-.01179
3.000	.38377	.05001	.12267	-.01405	.01057	-.00706	.37643	.08995	.00977	-.00812
7.500	.39318	.05139	.09738	-.02232	.00745	-.00024	.39062	.09273	.00739	-.00102
15.000	.42232	.05181	.05442	-.02708	.00424	.00509	.41460	.09569	.00475	.00462
30.000	.46007	.05038	.00058	-.02895	.00078	.00897	.45228	.09820	.00172	.00884
45.000	.48360	.04942	-.02391	-.02426	-.00027	.00800	.47579	.09970	.00057	.00769
60.000	.50074	.04855	-.04184	-.01846	-.00066	.00575	.49292	.10062	-.00005	.00578
GRADIENT	.00267	.00034	-.00474	-.00129	-.00072	.00138	.00262	.00062	-.00057	.00145

ORIGINAL PAGE IS
OF POOR QUALITY

CA20 747/1 01 SI CARRIER DATA (MGN060) (25 NOV 75)

REFERENCE DATA

SREF = 5500.0000 SQ.FT. XMRP = 1339.9000 IN.XC
LREF = 327.7800 IN. YMRP = .0000 IN.YC
BREF = 2348.0400 IN. ZMRP = 190.8000 IN.ZC
SCALE = .0300

PARAMETRIC DATA

ELV-IB =	.000	ELV-OB =	3.000
ELEVON =	5.000	MACH =	.600
BETAO =	.000	BETAC =	.000
PHI =	.000	DY =	10.000
DX =	.000	ALPHAC =	8.000

RN/L = 3.23 GRADIENT INTERVAL = .00/ 12.00

ALPHAO = 10.000

DZ	CN	CA	CLM	CY	CBL	CYN	CL	CD	CSL	CLN
.000	.82630	.00871	-.10104	-.02285	.00227	-.00159	.81224	.15206	.00195	-.00196
3.000	.83018	.00777	-.10210	-.02245	.00175	.00016	.81622	.15181	.00175	-.00015
7.500	.83631	.00693	-.10575	-.02133	.00126	.00146	.82240	.15205	.00149	.00122
15.000	.84944	.00530	-.10434	-.02238	.00017	.00422	.83562	.15272	.00080	.00413
30.000	.86491	.00444	-.10254	-.02369	-.00146	.00683	.85100	.15456	-.00025	.00699
45.000	.87788	.00424	-.09600	-.01768	-.00121	.00475	.86381	.15662	-.00037	.00489
60.000	.89073	.00449	-.08621	-.01113	-.00090	.00246	.87642	.15910	-.00046	.00258
GRADIENT	.00134	-.00023	-.00064	.00021	-.00013	.00040	.00136	.00000	-.00006	.00041

RN/L = 3.20 GRADIENT INTERVAL = .00/ 12.00

ALPHAO = 14.000

DZ	CN	CA	CLM	CY	CBL	CYN	CL	CD	CSL	CLN
.000	.74859	.00903	-.01679	-.02654	.00932	-.00618	.73565	.13889	.00811	-.00771
3.000	.75702	.00860	-.02705	-.03018	.00678	-.00076	.74402	.13992	.00554	-.00193
7.500	.77425	.00709	-.04291	-.03311	.00469	.00416	.76126	.14143	.00534	.00328
15.000	.78722	.00694	-.06034	-.03381	.00215	.00777	.77405	.14353	.00347	.00728
30.000	.83041	.00366	-.08027	-.02993	-.00014	.00907	.81716	.14780	.00144	.00895
45.000	.85094	.00360	-.08337	-.02359	-.00092	.00731	.83738	.15131	.00035	.00726
60.000	.86506	.00415	-.08481	-.01773	-.00083	.00486	.85120	.15430	.00002	.00493
GRADIENT	.00345	-.00027	-.00349	-.00086	-.00061	.00136	.00345	.00034	-.00036	.00144

CA20 747/1 01 S1 CARRIER DATA (MGN061) (25 NOV 75)

REFERENCE DATA

SREF =	5500.0000 SQ.FT.	XMRP =	1339.9000 IN.XC		
LREF =	327.7800 IN.	YMRP =	.0000 IN.YC		
BREF =	2348.0400 IN.	ZMRP =	190.8000 IN.ZC		
SCALE =	.0300				

PARAMETRIC DATA

ELV-IB =	.000	ELV-OB =	3.000
ELEVON =	5.000	MACH =	.600
BETAO =	.000	BETAC =	.000
PHI =	.000	DY =	10.000
DX =	10.000	ALPHAC =	8.000

RN/L = 3.28 GRADIENT INTERVAL = .00/ 12.00

ALPHAO = 10.000

DZ	CN	CA	CLM	CY	CBL	CYN	CL	CD	CSL	CLN
.000	.84496	.00697	-.11005	-.01755	.00231	-.00234	.83091	.15359	.00186	-.00271
3.000	.84744	.00658	-.10833	-.01781	.00196	-.00089	.83342	.15383	.00177	-.00122
7.500	.85253	.00599	-.10757	-.01797	.00141	.00076	.83854	.15394	.00153	.00050
15.000	.85998	.00493	-.10967	-.01872	.00045	.00310	.84606	.15419	.00093	.00228
30.000	.87392	.00415	-.10460	-.02151	-.00085	.00591	.85992	.15584	.00019	.00597
45.000	.88466	.00513	-.09379	-.01638	-.00085	.00416	.87052	.15871	-.00012	.00424
60.000	.88989	.00614	-.07833	-.01191	-.00107	.00316	.88515	.16231	-.00051	.00330
GRADIENT	.00102	-.00013	.00032	-.00005	-.00012	.00041	.00103	.00005	-.00005	.00042

RN/L = 3.28 GRADIENT INTERVAL = .00/ 12.00

ALPHAO = 14.000

DZ	CN	CA	CLM	CY	CBL	CYN	CL	CD	CSL	CLN
.000	.78722	.00543	-.01401	-.02263	.00537	-.00428	.77424	.14305	.00553	-.00533
3.000	.78948	.00634	-.02157	-.02609	.00480	-.00006	.77934	.14386	.00472	-.00089
7.500	.80219	.00541	-.03745	-.02934	.00334	.00389	.78906	.14463	.00395	.00325
15.000	.82447	.00353	-.05789	-.03206	.00114	.00773	.81131	.14674	.00247	.00742
30.000	.84216	.00400	-.07472	-.02953	-.00071	.00887	.82857	.15018	.00084	.00886
45.000	.86220	.00388	-.07656	-.02294	-.00100	.00704	.84843	.15354	.00024	.00710
60.000	.87051	.00538	-.08145	-.01780	-.00078	.00460	.85535	.15546	.00003	.00467
GRADIENT	.00280	-.00014	-.00316	-.00089	-.00040	.00107	.00199	.00021	-.00021	.00113

CA20 747/1 01 S1 CARRIER DATA (MGN062) (25 NOV 75)

REFERENCE DATA

SREF = 5500.0000 SQ.FT. XMRP = 1339.9000 IN.XC
LREF = 327.7800 IN. YMRP = .0000 IN.YC
BREF = 2348.0400 IN. ZMRP = 190.8000 IN.ZC
SCALE = .0300

PARAMETRIC DATA

ELV-IB = .000 ELV-OB = 3.000
ELEVON = 5.000 MACH = .600
BETAO = .000 BETAC = -5.000
PHI = .000 DY = .000
DX = .000 ALPHAC = 4.000

RN/L = 3.22 GRADIENT INTERVAL = .00/ 12.00

ALPHAO = 10.000

DZ	CN	CA	CLM	CY	CBL	CYN	CL	CD	CSL	CLN
.000	.41536	.04746	.02923	.10773	.01804	-.01928	.40812	.09062	.01593	-.02106
3.000	.41844	.04796	.02979	.10583	.01846	-.02188	.41114	.09144	.01608	-.02369
7.500	.43303	.04859	.00629	.10232	.01807	-.02172	.42558	.09359	.01570	-.02349
15.000	.45140	.04826	-.01233	.09937	.01812	-.02186	.44388	.09518	.01573	-.02363
30.000	.48122	.04648	-.03539	.09426	.01771	-.02071	.47372	.09552	.01545	-.02245
45.000	.50028	.04481	-.04538	.09098	.01675	-.01924	.49285	.09585	.01465	-.02089
60.000	.52063	.04329	-.05298	.08862	.01513	-.01565	.51326	.09748	.01341	-.01715
GRADIENT	.00243	.00015	-.00323	-.00073	-.00000	-.00030	.00240	.00040	-.00003	-.00029

RN/L = 3.23 GRADIENT INTERVAL = .00/ 12.00

ALPHAO = 14.000

DZ	CN	CA	CLM	CY	CBL	CYN	CL	CD	CSL	CLN
.000	.34126	.04847	.10726	.10795	.01795	-.01884	.33432	.08387	.01588	-.02052
3.000	.34448	.04790	.11584	.10719	.01890	-.02169	.33759	.08365	.01653	-.02355
7.500	.35817	.04805	.10278	.10501	.01900	-.02324	.35119	.08523	.01646	-.02510
15.000	.38770	.04972	.06486	.09782	.01825	-.02116	.38038	.08997	.01594	-.02295
30.000	.43558	.04894	.01437	.09187	.01724	-.01934	.42808	.09421	.01512	-.02104
45.000	.46654	.04712	-.01407	.09084	.01714	-.01939	.45906	.09563	.01502	-.02107
60.000	.48837	.04572	-.02983	.08987	.01651	-.01891	.48092	.09552	.01444	-.02053
GRADIENT	.00232	-.00005	-.00078	-.00040	.00013	-.00057	.00231	.00019	.00007	-.00058

CA20 747/1 DI SI CARRIER DATA (MGN063) (25 NOV 75)

REFERENCE DATA

SREF = 5500.0000 SQ.FT. XMRP = 1339.9000 IN.XC
LREF = 327.7800 IN. YMRP = .0000 IN.YC
EREF = 2348.0400 IN. ZMRP = 190.8000 IN.ZC
SCALE = .0300

PARAMETRIC DATA

ELV-IB = .000 ELV-OB = 3.000
ELEVON = 5.000 MACH = .600
BETAO = .000 BETAC = -5.000
PHI = .000 DY = .000
DX = 10.000 ALPHAC = 4.000

RN/L = 3.30 GRADIENT INTERVAL = .00/ 12.00

ALPHAO = 10.000

DZ	CN	CA	CLM	CY	CBL	CYN	CL	CD	CSL	CLN
.000	.44566	.04416	.01616	.10617	.01738	-.01882	.43860	.09050	.01532	-.02053
3.000	.44607	.04439	.02242	.10600	.01791	-.02181	.43899	.09077	.01554	-.02356
7.500	.45567	.04533	.00361	.10203	.01777	-.02148	.44844	.09272	.01543	-.02322
15.000	.47857	.04494	-.01565	.10000	.01763	-.02227	.46329	.09388	.01520	-.02359
30.000	.49354	.04422	-.03843	.09580	.01785	-.02160	.48661	.09561	.01549	-.02334
45.000	.51045	.04320	-.04807	.09178	.01692	-.01958	.50314	.09632	.01477	-.02134
60.000	.52480	.04199	-.05625	.09012	.01614	-.01895	.51753	.09691	.01407	-.02053
GRADIENT	.00140	.00016	-.00187	-.00058	.00004	-.00032	.00137	.00031	.00001	-.00032

RN/L = 3.27 GRADIENT INTERVAL = .00/ 12.00

ALPHAO = 14.000

DZ	CN	CA	CLM	CY	CBL	CYN	CL	CD	CSL	CLN
.000	.33074	.04194	.14102	.11059	.01816	-.02032	.37427	.08151	.01593	-.02210
3.000	.33405	.04268	.12956	.10981	.01860	-.02308	.37748	.08259	.01609	-.02490
7.500	.39370	.04442	.11025	.10541	.01839	-.02329	.38690	.08533	.01585	-.02508
15.000	.41551	.04648	.07016	.09714	.01766	-.02053	.40838	.08966	.01541	-.02226
30.000	.45321	.04670	.01609	.09363	.01737	-.02048	.44585	.09382	.01514	-.02219
45.000	.47854	.04566	-.01118	.09100	.01699	-.01959	.47114	.09543	.01465	-.02126
60.000	.49694	.04454	-.02924	.09104	.01663	-.01951	.48946	.09623	.01449	-.02115
GRADIENT	.00176	.00033	-.00412	-.00071	.00002	-.00037	.00172	.00052	-.00001	-.00037

CA20 747/1 01 S1 CARRIER DATA (MGN064) (25 NOV 75)

REFERENCE DATA

SREF = 5500.0000 SQ.FT. XMRP = 1339.8000 IN.XC
LREF = 327.7800 IN. YMRP = .0000 IN.YC
BREF = 2348.0400 IN. ZMRP = 190.8000 IN.ZC
SCALE = .0300

PARAMETRIC DATA

ELV-IB = .000 ELV-OB = 3.000
ELEVON = 5.000 MACH = .600
BETAO = .000 PHI = .000
DY = .000 BETAC = -5.000
DX = 20.000 ALPHAC = 4.000

RN/L = 3.30 GRADIENT INTERVAL = .00/ 12.00

ALPHAO = 10.000

DZ	CN	CA	CLM	CY	CBL	CYN	CL	CD	CSL	CLN
.000	.45752	.04364	.00516	.10203	.01812	-.02008	.45845	.09122	.01592	-.02186
3.000	.46173	.04380	-.00200	.10121	.01815	-.02086	.45462	.09183	.01587	-.02264
7.500	.46861	.04394	-.01400	.10000	.01812	-.02189	.46145	.09268	.01573	-.02366
15.000	.47932	.04447	-.02696	.09774	.01802	-.02171	.47204	.09433	.01565	-.02347
30.000	.49700	.04426	-.04399	.09180	.01741	-.01951	.48965	.09597	.01527	-.02132
45.000	.51002	.04356	-.05050	.09075	.01688	-.01918	.50267	.09663	.01478	-.02084
60.000	.52238	.04259	-.05397	.09258	.01703	-.02007	.51506	.09696	.01484	-.02174
GRADIENT	.00148	.00004	-.00256	-.00027	-.00000	-.00024	.00147	.00019	-.00003	-.00024

RN/L = 3.30 GRADIENT INTERVAL = .00/ 12.00

ALPHAO = 14.000

DZ	CN	CA	CLM	CY	CBL	CYN	CL	CD	CSL	CLN
.000	.40098	.03990	.12522	.10916	.02102	-.02623	.39462	.08159	.01816	-.02828
3.000	.40673	.03998	.12055	.10600	.02026	-.02481	.40032	.08228	.01756	-.02680
7.500	.41774	.04135	.09563	.10152	.01962	-.02303	.41113	.08479	.01710	-.02495
15.000	.43492	.04347	.05846	.09449	.01856	-.02013	.42799	.08870	.01635	-.02195
30.000	.46363	.04434	.01100	.08945	.01763	-.01856	.45546	.09256	.01550	-.02031
45.000	.48395	.04364	-.01080	.08951	.01720	-.01876	.47674	.09399	.01515	-.02045
60.000	.49921	.04287	-.02915	.08999	.01688	-.01894	.49200	.09482	.01480	-.02060
GRADIENT	.00225	.00020	-.00407	-.00102	-.00018	.00042	.00222	.00044	-.00014	.00044

ORIGINAL PAGE IS OF POOR QUALITY

CA20 747/1 01 S1 CARRIER DATA (MGN065) (25 NOV 75)

REFERENCE DATA

SREF =	5500.0000 SQ.FT.	XMRP =	1339.9000 IN.XC		
LREF =	327.7800 IN.	YMRP =	.0000 IN.YC		
BREF =	2348.0400 IN.	ZMRP =	190.8000 IN.ZC		
SCALE =	.0300				

PARAMETRIC DATA

ELV-IB =	.000	ELV-OB =	3.000
ELEVON =	5.000	MACH =	.600
BETAO =	.000	BETAC =	-5.000
PHI =	.000	DY =	.000
DX =	.000	ALPHAC =	8.000

RN/L = 3.22 GRADIENT INTERVAL = .00/ 12.00

ALPHAO = 10.000

DZ	CN	CA	CLM	CY	CBL	CYN	CL	CD	CSL	CLN
.000	.82425	.00186	-.11175	.10328	.01770	-.01532	.81141	.14496	.01477	-.01816
3.000	.82685	.00125	-.11000	.09894	.01814	-.01650	.81329	.14467	.01500	-.01940
7.500	.83289	.00053	-.11331	.09472	.01823	-.01655	.82014	.14515	.01508	-.01946
15.000	.84292	-.00029	-.11389	.09159	.01920	-.01740	.83017	.14608	.01598	-.02047
30.000	.86255	-.00170	-.10959	.08537	.01890	-.01506	.84974	.14611	.01600	-.01811
45.000	.87745	-.00310	-.10620	.08689	.01954	-.01597	.86465	.14931	.01656	-.01914
60.000	.89289	-.00453	-.10652	.08802	.02006	-.01665	.88011	.15059	.01696	-.01939
GRADIENT	.00118	-.00018	-.00025	-.00113	.00007	-.00015	.00119	.00003	.00004	-.00016

RN/L = 3.23 GRADIENT INTERVAL = .00/ 12.00

ALPHAO = 14.000

DZ	CN	CA	CLM	CY	CBL	CYN	CL	CD	CSL	CLN
.000	.74275	.00149	-.01945	.11042	.01891	-.01859	.73121	.13045	.01539	-.02159
3.000	.74710	.00181	-.02384	.10599	.01914	-.01999	.73543	.13152	.01539	-.02301
7.500	.76197	.00194	-.03974	.09719	.01852	-.01741	.75005	.13423	.01522	-.02037
15.000	.78350	.00126	-.05979	.08985	.01857	-.01605	.77138	.13730	.01550	-.01903
30.000	.81696	-.00095	-.07753	.08729	.01904	-.01634	.80668	.14128	.01591	-.01940
45.000	.84371	-.00266	-.09811	.08466	.01884	-.01542	.83135	.14389	.01587	-.01845
60.000	.86898	-.00392	-.09257	.08665	.01953	-.01629	.85053	.14609	.01640	-.01943
GRADIENT	.00262	.00006	-.00277	-.00178	-.00006	.00019	.00257	.00051	-.00002	.00020

CA20 747/1 01 S1 CARRIER DATA (MGN066) (25 NOV 75)

REFERENCE DATA

SREF = 5500.0000 SQ.FT. XMRP = 1339.9000 IN.XC
LREF = 327.7800 IN. YMRP = .0000 IN.YC
BREF = 2348.0400 IN. ZMRP = 190.8000 IN.ZC
SCALE = .0300

PARAMETRIC DATA

ELV-IB =	.000	ELV-OB =	3.000
ELEVON =	5.000	MACH =	.300
BETAO =	.000	BETAC =	-5.000
PHI =	.000	DY =	.000
DX =	10.000	ALPHAC =	8.000

RN/L = 3.24 GRADIENT INTERVAL = .00/ 12.00

ALPHAO = 10.000

DZ	CN	CA	CLM	CY	CBL	CYN	CL	CD	CSL	CLN
.000	.84526	-.00155	-.12307	.10052	.01899	-.01458	.83269	.14525	.01617	-.01766
3.000	.84486	-.00186	-.11887	.09722	.01928	-.01579	.83235	.14488	.01624	-.01890
7.500	.84828	-.00224	-.11959	.09455	.01934	-.01655	.83578	.14509	.01617	-.01965
15.000	.85634	-.00266	-.12053	.09300	.02014	-.01771	.84379	.14608	.01676	-.02093
30.000	.86928	-.00282	-.11144	.08731	.01931	-.01598	.85656	.14818	.01624	-.01909
45.000	.87987	-.00347	-.10679	.08783	.01895	-.01650	.86711	.14937	.01579	-.01954
60.000	.88849	-.00324	-.10912	.08818	.01855	-.01704	.87556	.15109	.01530	-.02001
GRADIENT	.00043	-.00009	.00041	-.00078	.00004	-.00025	.00044	-.00002	-.00000	-.00026

RN/L = 3.25 GRADIENT INTERVAL = .00/ 12.00

ALPHAO = 14.000

DZ	CN	CA	CLM	CY	CBL	CYN	CL	CD	CSL	CLN
.000	.77910	-.00322	-.01582	.10934	.01934	-.01905	.76782	.13212	.01574	-.02212
3.000	.78223	-.00275	-.02140	.10572	.01959	-.02013	.77083	.13312	.01580	-.02323
7.500	.79091	-.00200	-.03443	.09863	.01895	-.01844	.77924	.13536	.01546	-.02145
15.000	.80686	-.00194	-.05515	.09215	.01905	-.01710	.79493	.13920	.01579	-.02014
30.000	.83294	-.00257	-.07234	.08971	.01921	-.01746	.82073	.14211	.01589	-.02053
45.000	.85028	-.00292	-.08102	.08686	.01848	-.01607	.83787	.14477	.01541	-.01903
60.000	.86540	-.00293	-.08866	.08800	.01827	-.01684	.85276	.14739	.01507	-.01976
GRADIENT	.00160	.00016	-.00251	-.00144	-.00006	.00010	.00155	.00044	-.00004	.00011

CA20 747/1 01 SI CARRIER DATA (HGN067) (25 NOV 75)

REFERENCE DATA

SREF =	5500.0000 SQ.FT.	XMRP =	1339.9000 IN.XC		
LREF =	327.7800 IN.	YMRP =	.0000 IN.YC		
BREF =	2348.0400 IN.	ZMRP =	190.8000 IN.ZC		
SCALE =	.0300				

PARAMETRIC DATA

ELV-IB =	.000	ELV-OB =	3.000
ELEVON =	5.000	MACH =	.600
BETAO =	.000	PHI =	.000
DY =	.000	BETAC =	-5.000
DX =	20.000	ALPHAC =	8.000

RN/L = 3.28 GRADIENT INTERVAL = .00/ 12.00

ALPHAO = 10.000

DZ	CN	CA	CLM	CY	CBL	CYN	CL	CD	CSL	CLN
.000	.85103	-.00217	-.14355	.09428	.01708	-.01487	.83933	.14579	.01424	-.01761
3.000	.85051	-.00250	-.13404	.09233	.01757	-.01601	.83802	.14523	.01453	-.01882
7.500	.85227	-.00159	-.12768	.09264	.01733	-.01734	.83960	.14644	.01405	-.02008
15.000	.86093	-.00241	-.12405	.09158	.01801	-.01786	.84867	.14712	.01464	-.02072
30.000	.87081	-.00155	-.11040	.08630	.01711	-.01586	.85784	.14959	.01410	-.01859
45.000	.88028	-.00260	-.10751	.08640	.01665	-.01639	.86736	.15030	.01355	-.01904
60.000	.88825	-.00236	-.11157	.08711	.01707	-.01703	.87319	.15157	.01386	-.01974
GRADIENT	.00008	.00009	.00206	-.00021	.00003	-.00033	.00006	.00010	-.00003	-.00033

RN/L = 3.29 GRADIENT INTERVAL = .00/ 12.00

ALPHAO = 14.000

DZ	CN	CA	CLM	CY	CBL	CYN	CL	CD	CSL	CLN
.000	.79531	-.00371	-.02222	.10456	.01931	-.02130	.78486	.13462	.01532	-.02432
3.000	.80131	-.00295	-.03140	.10075	.01852	-.02020	.78965	.13624	.01473	-.02311
7.500	.80812	-.00190	-.04015	.09543	.01805	-.01900	.79617	.13846	.01448	-.02185
15.000	.82042	-.00137	-.05158	.08881	.01758	-.01684	.80819	.14112	.01439	-.01953
30.000	.84228	-.00148	-.06478	.08526	.01744	-.01564	.82974	.14480	.01445	-.01843
45.000	.85545	-.00171	-.07369	.08559	.01733	-.01556	.84374	.14704	.01436	-.01833
60.000	.86926	-.00187	-.08694	.08613	.01705	-.01639	.85538	.14910	.01385	-.01910
GRADIENT	.00157	.00024	-.00235	-.00122	-.00016	.00030	.00159	.00051	-.00011	.00033

ORIGINAL PAGE IS
OF POOR QUALITY

CA20 747/1 01 S1 CARRIER DATA (MGN068) (25 NOV 75)

REFERENCE DATA

SREF = 5500.0000 SQ.FT. XMRP = 1339.9000 IN.XC
LREF = 327.7800 IN. YMRP = .0000 IN.YC
BREF = 2348.0400 IN. ZMRP = 190.8000 IN.ZC
SCALE = .0300

PARAMETRIC DATA

ELV-IB =	.000	ELV-OB =	3.000
ELEVON =	5.000	MACH =	.600
BETAO =	.000	BETAC =	-5.000
PHI =	.000	DY =	10.000
DX =	.000	ALPHAC =	4.000

RN/L = 3.29 GRADIENT INTERVAL = .00/ 12.00

ALPHAO = 10.000

DZ	CN	CA	CLM	CY	CBL	CYN	CL	CD	CSL	CLN
.000	.42989	.04973	-.04809	.08900	.02471	-.02263	.42234	.09439	.02221	-.02509
3.000	.43765	.04981	-.04632	.08748	.02409	-.02177	.43004	.09528	.02168	-.02417
7.500	.45053	.04977	-.04740	.08404	.02262	-.01960	.44286	.09659	.02044	-.02185
15.000	.46571	.04903	-.04649	.07994	.02055	-.01696	.45804	.09745	.01866	-.01902
30.000	.48983	.04711	-.04970	.07778	.01778	-.01420	.48222	.09805	.01620	-.01599
45.000	.50692	.04504	-.05658	.08355	.01724	-.01673	.49943	.09778	.01540	-.01844
60.000	.52320	.04300	-.06241	.09094	.01694	-.02022	.51584	.09745	.01474	-.02189
GRADIENT	.00276	.00000	.00007	-.00067	-.00028	.00041	.00274	.00029	-.00024	.00044

RN/L = 3.22 GRADIENT INTERVAL = .00/ 12.00

ALPHAO = 14.000

DZ	CN	CA	CLM	CY	CBL	CYN	CL	CD	CSL	CLN
.000	.35652	.04949	.02357	.08408	.03031	-.02513	.34939	.09649	.02752	-.02816
3.000	.36495	.04900	.02828	.08445	.02914	-.02495	.35783	.09688	.02637	-.02786
7.500	.38066	.04920	.02164	.08001	.02734	-.02164	.37343	.09872	.02493	-.02438
15.000	.40696	.04963	.00452	.07194	.02413	-.01596	.39944	.09189	.02233	-.01840
30.000	.44693	.04907	-.01923	.06042	.01775	-.00663	.43935	.09551	.01695	-.00845
45.000	.47233	.04744	-.02933	.07305	.01677	-.01161	.46478	.09555	.01547	-.01330
60.000	.49168	.04545	-.04114	.08369	.01706	-.01680	.48424	.09559	.01521	-.01849
GRADIENT	.00324	-.00003	-.00035	-.00058	-.00040	.00049	.00323	.00031	-.00034	.00053

CA20 747/1 01 51 CARRIER DATA (MGN069) (25 NOV 75)

REFERENCE DATA

SREF =	5500.0000 SQ.FT.	XMRP =	1339.9000 IN.XC		
LREF =	327.7800 IN.	YMRP =	.0000 IN.YC		
BREF =	2348.0400 IN.	ZMRP =	190.8000 IN.ZC		
SCALE =	.0300				

PARAMETRIC DATA

ELV-IB =	.000	ELV-OB =	3.000
ELEVON =	5.000	MACH =	.600
BETAO =	.000	BETAC =	-5.000
PHI =	.000	DY =	10.000
DX =	10.000	ALPHAC =	4.000

RN/L = 3.25 GRADIENT INTERVAL = .00/ 12.00

ALPHAO = 10.000

DZ	CN	CA	CLM	CY	CBL	CYN	CL	CD	CSL	CLN
.000	.44943	.04595	-.04159	.09212	.02286	-.02290	.44216	.09268	.02035	-.02516
3.000	.46359	.04635	-.03908	.09098	.02260	-.02258	.44636	.09352	.02020	-.02483
7.500	.46295	.04695	-.04469	.08732	.02165	-.02042	.45551	.09499	.01940	-.02257
15.000	.47517	.04642	-.04317	.08266	.01994	-.01782	.46771	.09584	.01797	-.01991
30.000	.48494	.04572	-.04994	.07979	.01753	-.01522	.48745	.09720	.01585	-.01697
45.000	.50982	.04395	-.05675	.08375	.01695	-.01687	.50224	.09699	.01509	-.01655
60.000	.52276	.04221	-.05847	.09033	.01679	-.01982	.51548	.09662	.01463	-.02147
GRADIENT	.00182	.00012	-.00048	-.00065	-.00017	.00034	.00180	.00031	-.00013	.00036

RN/L = 3.25 GRADIENT INTERVAL = .00/ 12.00

ALPHAO = 14.000

DZ	CN	CA	CLM	CY	CBL	CYN	CL	CD	CSL	CLN
.000	.39090	.04337	.04977	.08979	.02728	-.02508	.38422	.08399	.02451	-.02780
3.000	.39410	.04324	.05424	.08976	.02684	-.02540	.38742	.08419	.02404	-.02806
7.500	.40447	.04499	.04174	.08389	.02550	-.02178	.39755	.08702	.02309	-.02433
15.000	.42463	.04645	.01776	.07529	.02247	-.01653	.41770	.09061	.02052	-.01878
30.000	.43913	.04685	-.01222	.06329	.01695	-.00759	.45072	.09448	.01606	-.00922
45.000	.47825	.04572	-.02504	.07582	.01657	-.01304	.47184	.09556	.01511	-.01470
60.000	.48821	.04419	-.03741	.08385	.01667	-.01705	.48987	.09582	.01480	-.01870
GRADIENT	.00185	.00023	-.00120	-.00083	-.00024	.00047	.00181	.00042	-.00019	.00049

CA20 747/1 01 S1 CARRIER DATA (HGN070) (25 NOV 75)

REFERENCE DATA

SREF = 5500.0000 SQ.FT. XMRP = 1339.9000 IN.XC
LREF = 327.7800 IN. YMRP = .0000 IN.YC
BREF = 2348.0400 IN. ZMRP = 190.8000 IN.ZC
SCALE = .0300

PARAMETRIC DATA

ELV-IB =	.000	ELV-OB =	3.000
ELEVON =	5.000	MACH =	.600
BETAO =	.000	BETAC =	-5.000
PHI =	.000	DY =	10.000
DX =	.000	ALPHAC =	8.000

RN/L = 3.26 GRADIENT INTERVAL = .00/ 12.00

ALPHAO = 10.000

DZ	CN	CA	CLM	CY	CBL	CYN	CL	CD	CSL	CLN
.000	.82634	.00255	-.15364	.08055	.02154	-.01738	.81335	.14601	.01819	-.02085
3.000	.83026	.00173	-.14863	.07898	.02147	-.01655	.81735	.14588	.01827	-.02002
7.500	.83622	.00116	-.14087	.07688	.02089	-.01478	.82331	.14635	.01801	-.01818
15.000	.84526	.00055	-.12715	.07384	.01961	-.01255	.83232	.14732	.01713	-.01576
30.000	.86286	-.00111	-.11508	.07590	.01836	-.01229	.84994	.14874	.01595	-.01529
45.000	.87711	-.00243	-.11248	.08121	.01839	-.01436	.86420	.14992	.01562	-.01734
60.000	.89195	-.00398	-.11152	.08700	.01896	-.01675	.87909	.15096	.01576	-.01978
GRADIENT	.00132	-.00018	.00170	-.00053	-.00009	.00035	.00133	.00005	-.00003	.00036

RN/L = 3.21 GRADIENT INTERVAL = .00/ 12.00

ALPHAO = 14.000

DZ	CN	CA	CLM	CY	CBL	CYN	CL	CD	CSL	CLN
.000	.74353	.00358	-.07486	.07547	.02683	-.02032	.73161	.13264	.02289	-.02467
3.000	.75437	.00345	-.07575	.07335	.02573	-.01795	.74231	.13439	.02222	-.02215
7.500	.77003	.00294	-.08315	.06950	.02398	-.01461	.75782	.13661	.02107	-.01855
15.000	.79175	.00217	-.08776	.06249	.02105	-.00918	.77934	.13953	.01915	-.01269
30.000	.82220	.00086	-.08653	.06118	.01755	-.00555	.80955	.14362	.01633	-.00853
45.000	.84539	-.00094	-.09331	.07521	.01820	-.01195	.83271	.14587	.01594	-.01493
60.000	.86284	-.00223	-.09918	.08099	.01830	-.01443	.85012	.14764	.01552	-.01739
GRADIENT	.00353	-.00009	-.00115	-.00080	-.00038	.00076	.00349	.00053	-.00024	.00081

CA20 747/1 01 SI CARRIER DATA (HON071) (25 NOV 75)

REFERENCE DATA

SREF = 5500.0000 SQ.FT. XMRP = 1339.9000 IN.XC
LREF = 327.7800 IN. YMRP = .0000 IN.YC
BREF = 2348.0400 IN. ZMRP = 190.8000 IN.ZC
SCALE = .0300

PARAMETRIC DATA

ELV-IB =	.000	ELV-OB =	3.000
ELEVON =	5.000	MACH =	.600
BETAO =	.000	BETAC =	-5.000
PHI =	.000	DY =	10.000
DX =	10.000	ALPHAC =	8.000

RN/L = 3.25 GRADIENT INTERVAL = .00/ 12.00

ALPHAO = 10.000

DZ	CN	CA	CLM	CY	CBL	CYN	CL	CD	CSL	CLN
.000	.84133	.00060	-.15294	.09357	.02023	-.01771	.82845	.14669	.01685	-.02095
3.000	.84341	.00024	-.14704	.09187	.02026	-.01700	.83056	.14659	.01701	-.02026
7.500	.84749	-.00009	-.13869	.07941	.01990	-.01557	.83463	.14708	.01689	-.01879
15.000	.85526	-.00034	-.12870	.07694	.01915	-.01387	.84233	.14818	.01645	-.01693
30.000	.86832	-.00060	-.11553	.07629	.01765	-.01258	.85524	.15019	.01521	-.01545
45.000	.88129	-.00212	-.11168	.08084	.01776	-.01438	.86826	.15095	.01499	-.01725
60.000	.89411	-.00403	-.11082	.08475	.01865	-.01591	.88123	.15129	.01563	-.01831
GRADIENT	.00083	-.00009	.00190	-.00056	-.00005	.00029	.00083	.00006	.00000	.00029

RN/L = 3.25 GRADIENT INTERVAL = .00/ 12.00

ALPHAO = 14.000

DZ	CN	CA	CLM	CY	CBL	CYN	CL	CD	CSL	CLN
.000	.77909	.00022	-.05884	.08035	.02400	-.01979	.76722	.13550	.02020	-.02365
3.000	.78520	.00045	-.06179	.07827	.02341	-.01829	.77319	.13679	.01959	-.02209
7.500	.79626	.00054	-.07031	.07289	.02197	-.01483	.78417	.13882	.01906	-.01841
15.000	.81178	.00053	-.07779	.06580	.01986	-.01002	.79934	.14155	.01782	-.01332
30.000	.83382	.00050	-.07853	.06512	.01721	-.00747	.82087	.14524	.01565	-.01054
45.000	.85319	-.00078	-.08703	.07609	.01770	-.01247	.84036	.14739	.01527	-.01555
60.000	.86712	-.00186	-.09401	.08846	.01763	-.01439	.85427	.14874	.01486	-.01723
GRADIENT	.00232	.00004	-.00156	-.00101	-.00028	.00067	.00227	.00044	-.00015	.00071

ORIGINAL PAGE IS
OF POOR QUALITY

CA20 747/1 01 S1 CARRIER DATA (HGN072) (25 NOV 75)

REFERENCE DATA

SREF =	5500.0000 SQ.FT.	XMRP =	1339.9000 IN.XC		
LREF =	327.7800 IN.	YMRP =	.0000 IN.YC		
BREF =	2348.0400 IN.	ZMRP =	190.8000 IN.ZC		
SCALE =	.0300				

PARAMETRIC DATA

ELV-IB =	.000	ELV-OB =	3.000
ELEVON =	5.000	MACH =	.600
BETAO =	.000	BETAC =	5.000
PHI =	.000	DY =	10.000
DX =	.000	ALPHAC =	4.000

RN/L = 3.28 GRADIENT INTERVAL = .00/ 12.00

ALPHAO = 10.000

DZ	CN	CA	CLM	CY	CBL	CYN	CL	CD	CSL	CLN
.000	.43134	.05042	.04565	-.11791	-.00833	.01347	.42371	.09523	-.00588	.01427
3.000	.43932	.04991	.03187	-.11921	-.01028	.01710	.43170	.09555	-.00844	.01808
7.500	.45411	.04872	.00782	-.12465	-.01253	.02237	.44653	.09592	-.01012	.02355
15.000	.47099	.04689	-.02305	-.12542	-.01428	.02565	.46351	.09586	-.01152	.02700
30.000	.49708	.04456	-.05322	-.12594	-.01643	.02847	.48970	.09628	-.01336	.03003
45.000	.51358	.04277	-.06268	-.12141	-.01717	.02747	.50630	.09622	-.01420	.02911
60.000	.53074	.04072	-.07087	-.11593	-.01771	.02591	.52358	.09597	-.01490	.02762
GRADIENT	.00305	-.00023	-.00507	-.00092	-.00055	.00118	.00306	.00009	-.00043	.00124

RN/L = 3.22 GRADIENT INTERVAL = .00/ 12.00

ALPHAO = 14.000

DZ	CN	CA	CLM	CY	CBL	CYN	CL	CD	CSL	CLN
.000	.34317	.04771	.16948	-.11791	-.00258	.00630	.33630	.08332	-.00191	.00553
3.000	.35120	.04818	.15878	-.11945	-.00509	.01183	.34424	.08462	-.00382	.01230
7.500	.37026	.04870	.12549	-.12552	-.00852	.02003	.36314	.08713	-.00638	.02081
15.000	.40366	.04898	.06407	-.12746	-.01189	.02485	.39633	.09090	-.00922	.02595
30.000	.44840	.04705	-.00258	-.12814	-.01525	.02895	.44103	.09366	-.01215	.03026
45.000	.47717	.04515	-.03370	-.12493	-.01655	.02903	.46984	.09478	-.01343	.03060
60.000	.49750	.04378	-.05090	-.11994	-.01698	.02747	.49020	.09554	-.01401	.02909
GRADIENT	.00366	.00013	-.00599	-.00104	-.00079	.00183	.00363	.00051	-.00059	.00190

CA20 747/1 01 S1 CARRIER DATA (MGN073) (25 NOV 75)

REFERENCE DATA

SREF = 6500.0000 SQ.FT. XMRP = 1339.9000 IN.XC
LREF = 327.7800 IN. YMRP = .0000 IN.YC
BREF = 2343.0400 IN. ZMRP = 190.8000 IN.ZC
SCALE = .0300

PARAMETRIC DATA

ELV-IB = .000 ELV-OB = 3.000
ELEVON = 5.000 MACH = .600
BETAO = .000 BETAC = 5.000
PHI = .000 DY = 10.000
DX = 10.000 ALPHAC = 4.000

RN/L = 3.24 GRADIENT INTERVAL = .00/ 12.00

ALPHAO = 10.000

DZ	CN	CA	CLM	CY	CBL	CYN	CL	CD	CSL	CLN
.000	.44354	.04738	.05082	-.11126	-.00931	.01175	.43615	.09349	-.00803	.01256
3.000	.44787	.04720	.04176	-.11388	-.01098	.01564	.44048	.09376	-.00929	.01671
7.500	.45888	.04652	.01778	-.11959	-.01294	.02095	.45150	.09423	-.01059	.02219
15.000	.47372	.04513	-.01379	-.12239	-.01459	.02481	.46641	.09440	-.01191	.02620
30.000	.49637	.04311	-.04854	-.12412	-.01681	.02790	.48915	.09476	-.01380	.02950
45.000	.51189	.04200	-.05872	-.12120	-.01747	.02749	.50469	.09528	-.01450	.02916
60.000	.52677	.04085	-.05051	-.11857	-.01805	.02691	.51952	.09569	-.01515	.02855
GRADIENT	.00209	-.00012	-.00429	-.00112	-.00048	.00122	.00208	.00010	-.00035	.00127

RN/L = 3.25 GRADIENT INTERVAL = .00/ 12.00

ALPHAO = 14.000

DZ	CN	CA	CLM	CY	CBL	CYN	CL	CD	CSL	CLN
.000	.37258	.04397	.17073	-.11153	-.00594	.00767	.37191	.09331	-.00511	.00925
3.000	.39393	.04474	.16085	-.11435	-.00799	.01282	.37715	.09463	-.00561	.01359
7.500	.40029	.04597	.12071	-.12124	-.01088	.01999	.39330	.09745	-.00873	.02102
15.000	.42233	.04594	.05194	-.12505	-.01342	.02482	.41850	.09018	-.01075	.02603
30.000	.46148	.04424	-.00228	-.12760	-.01638	.02900	.45433	.09223	-.01324	.03065
45.000	.48628	.04301	-.03224	-.12447	-.01747	.02878	.47912	.09361	-.01436	.03045
60.000	.50309	.04228	-.04884	-.12146	-.01791	.02768	.49591	.09464	-.01492	.02940
GRADIENT	.00295	.00025	-.00685	-.00131	-.00065	.00164	.00291	.00056	-.00048	.00170

CA20 747/1 01 SI CARRIER DATA (HGN0741 (25 NOV 75)

REFERENCE DATA

SREF = 5500.0000 SQ.FT. XMRP = 1339.9000 IN.XC
LREF = 327.7800 IN. YMRP = .0000 IN.YC
BREF = 2348.0400 IN. ZMRP = 190.8000 IN.ZC
SCALE = .0300

PARAMETRIC DATA

ELV-IB = .000 ELV-OB = 3.000
ELEVON = 5.000 MACH = .600
BETAO = .000 BETAC = 5.000
PHI = .000 DY = 10.000
DX = .000 ALPHAC = 8.000

RN/L = 3.27 GRADIENT INTERVAL = .00/ 12.00

ALPHAO = 10.000

DZ	CN	CA	CLM	CY	CBL	CYN	CL	CD	CSL	CLN
.000	.83670	.00211	-.11598	-.12209	-.01072	.01451	.82363	.14737	-.00804	.01615
3.000	.83839	.00108	-.11748	-.12308	-.01184	.01833	.82546	.14665	-.00848	.02011
7.500	.84113	.00034	-.12108	-.12303	-.01230	.02112	.82829	.14640	-.00880	.02300
15.000	.84977	-.00025	-.12550	-.12451	-.01396	.02457	.83690	.14732	-.00948	.02652
30.000	.86643	-.00072	-.12899	-.11979	-.01523	.02479	.85339	.14975	-.01059	.02705
45.000	.87899	-.00062	-.12756	-.11678	-.01553	.02416	.86574	.15203	-.01110	.02649
60.000	.89148	-.00035	-.12699	-.11445	-.01568	.02372	.87799	.15446	-.01132	.02608
GRADIENT	.00059	-.00023	-.00069	-.00011	-.00025	.00086	.00062	-.00012	-.00010	.00089

RN/L = 3.22 GRADIENT INTERVAL = .00/ 12.00

ALPHAO = 14.000

DZ	CN	CA	CLM	CY	CBL	CYN	CL	CD	CSL	CLN
.000	.75476	.00284	-.01727	-.12338	-.00645	.01002	.74280	.13386	-.00462	.01098
3.000	.76387	.00202	-.02763	-.12602	-.00917	.01597	.75192	.13463	-.00626	.01732
7.500	.77968	.00078	-.05606	-.12889	-.01146	.02135	.76770	.13616	-.00758	.02301
15.000	.79939	-.00073	-.08233	-.12828	-.01348	.02485	.78639	.13792	-.00935	.02692
30.000	.82648	-.00146	-.10271	-.12523	-.01552	.02684	.81418	.14208	-.01062	.02913
45.000	.84943	-.00160	-.10949	-.11944	-.01636	.02520	.83680	.14593	-.01174	.02765
60.000	.86568	-.00213	-.11454	-.11565	-.01702	.02399	.85290	.14822	-.01261	.02649
GRADIENT	.00334	-.00027	-.00526	-.00073	-.00065	.00149	.00333	.00031	-.00039	.00158

CA20 747/1 01 S1 CARRIER DATA (MGN075) (25 NOV 75)

REFERENCE DATA

SREF =	6500.0000 SQ.FT.	XMRP =	1339.9000 IN.XC		
LREF =	327.7800 IN.	YMRP =	.0800 IN.YC		
BREF =	2348.0400 IN.	ZMRP =	190.8000 IN.ZC		
SCALE =	.0300				

PARAMETRIC DATA

ELV-IB =	.000	ELV-OB =	3.000
ELEVON =	5.000	MACH =	.600
BETAO =	.000	BETAC =	5.000
PHI =	.000	DY =	10.000
DX =	10.000	ALPHAC =	8.000

RN/L = 3.24 GRADIENT INTERVAL = .00/ 12.00

ALPHAO = 10.000

DZ	CN	CA	CLM	CY	CBL	CYN	CL	CD	CSL	CLN
.000	.84382	.00440	-.12057	-.11641	-.00972	.01434	.83024	.15086	-.00708	.01582
3.000	.84571	.00371	-.12180	-.11794	-.01068	.01717	.83222	.15051	-.00753	.01876
7.500	.84877	.00290	-.12339	-.12000	-.01186	.02051	.83537	.15024	-.00812	.02226
15.000	.85524	.00203	-.12698	-.12160	-.01347	.02411	.84190	.15051	-.00908	.02608
30.000	.86899	.00184	-.12950	-.11951	-.01434	.02513	.85537	.15269	-.00976	.02723
45.000	.87911	.00180	-.12666	-.11744	-.01441	.02495	.86545	.15443	-.00986	.02707
60.000	.88956	.00194	-.13112	-.11617	-.01435	.02502	.87581	.15540	-.00979	.02713
GRADIENT	.00068	-.00020	-.00037	-.00048	-.00028	.00082	.00069	-.00008	-.00014	.00085

RN/L = 3.23 GRADIENT INTERVAL = .00/ 12.00

ALPHAO = 14.000

DZ	CN	CA	CLM	CY	CBL	CYN	CL	CD	CSL	CLN
.000	.75468	.00352	.00288	-.11789	-.00740	.01180	.74260	.13452	-.00524	.01291
3.000	.75963	.00304	-.01264	-.12069	-.00895	.01643	.74757	.13490	-.00596	.01774
7.500	.77211	.00211	-.03840	-.12419	-.01106	.02090	.76001	.13616	-.00726	.02250
15.000	.78639	.00059	-.06005	-.12544	-.01304	.02448	.77432	.13724	-.00859	.02637
30.000	.81391	-.00127	-.09201	-.12474	-.01639	.02655	.80167	.14006	-.01153	.02899
45.000	.83620	-.00182	-.10229	-.11940	-.01789	.02479	.82381	.14342	-.01332	.02752
60.000	.85180	-.00269	-.10973	-.11604	-.01859	.02382	.83932	.14527	-.01417	.02659
GRADIENT	.00235	-.00019	-.00552	-.00083	-.00049	.00120	.00235	.00022	-.00027	.00126

ORIGINAL PAGE IS
OF POOR QUALITY

CA20 747/1 01 S1 CARRIER DATA (MSN076) (25 NOV 75)

REFERENCE DATA

SREF = 5500.0000 SQ.FT. XMRP = 1339.9000 IN.XC
LREF = 327.7800 IN. YMRP = .0000 IN.YC
BREF = 2348.0400 IN. ZMRP = 190.8000 IN.ZC
SCALE = .0300

PARAMETRIC DATA

ELV-IB = .000 ELV-OB = 3.000
ELEVON = 5.000 MACH = .600
BETAO = .000 BETAC = -5.000
PHI = 7.500 DY = .000
DX = .000 ALPHAC = 4.000

RN/L = 3.22 GRADIENT INTERVAL = .00/ 12.00

ALPHAO = 10.000

DZ	CN	CA	CLH	CY	CBL	CYN	CL	CD	CSL	CLN
.000	.42575	.04843	.03262	.09371	.01477	-.01383	.41835	.09267	.01324	-.01530
3.000	.43040	.04818	.03174	.09504	.01525	-.01731	.42301	.09291	.01336	-.01881
7.500	.44121	.04798	.01712	.09817	.01614	-.02099	.43378	.09384	.01396	-.02257
15.000	.46197	.04726	-.01151	.09636	.01632	-.02104	.45450	.09529	.01404	-.02263
30.000	.48869	.04568	-.03453	.09589	.01687	-.02162	.48124	.09552	.01452	-.02326
45.000	.50620	.04420	-.04644	.09310	.01627	-.02019	.49881	.09687	.01407	-.02178
60.000	.52307	.04258	-.05619	.08821	.01545	-.01759	.51575	.09703	.01353	-.01911
GRADIENT	.00209	-.00006	-.00216	.00060	.00018	-.00094	.00208	.00016	.00008	-.00096

RN/L = 3.24 GRADIENT INTERVAL = .00/ 12.00

ALPHAO = 14.000

DZ	CN	CA	CLH	CY	CBL	CYN	CL	CD	CSL	CLN
.000	.34530	.04594	.12776	.09111	.01382	-.01236	.33861	.08178	.01245	-.01374
3.000	.35529	.04741	.12007	.09473	.01461	-.01628	.34839	.08429	.01283	-.01771
7.500	.36955	.04837	.10542	.09761	.01530	-.01979	.36247	.08673	.01315	-.02128
15.000	.39770	.04894	.06587	.09356	.01523	-.01860	.39040	.09024	.01321	-.02009
30.000	.44401	.04765	.01168	.09596	.01642	-.02110	.43660	.09380	.01412	-.02270
45.000	.47273	.04604	-.01592	.09431	.01640	-.02076	.46533	.09521	.01414	-.02236
60.000	.49279	.04442	-.03270	.09336	.01622	-.02034	.48544	.09569	.01401	-.02193
GRADIENT	.00323	.00032	-.00300	.00035	.00019	-.00097	.00318	.00065	.00009	-.00099

CA20 747/1 01 S1 CARRIER DATA (MGN077) (25 NOV 75)

REFERENCE DATA

SREF = 5500.0000 SQ.FT. XMRP = 1339.9000 IN.XC
LREF = 327.7800 IN. YMRP = .0000 IN.YC
BREF = 2348.0400 IN. ZMRP = 190.8000 IN.ZC
SCALE = .0300

PARAMETRIC DATA

ELV-IB =	.000	ELV-OB =	3.000
ELEVON =	5.000	MACH =	.600
BETAO =	.000	BETAC =	-5.000
PHI =	7.500	DY =	.000
DX =	10.000	ALPHAC =	4.000

RN/L = 3.29 GRADIENT INTERVAL = .00/ 12.00

ALPHAO = 10.000

DZ	CN	CA	CLM	CY	CBL	CYN	CL	CD	CSL	CLN
.000	.44670	.04529	.02103	.09694	.01448	-.01336	.43952	.09173	.01300	-.01480
3.000	.44577	.04535	.02980	.09919	.01549	-.01779	.43959	.09170	.01355	-.01931
7.500	.45283	.04573	.01909	.10301	.01624	-.02150	.44556	.09282	.01390	-.02308
15.000	.46900	.04580	-.00838	.10190	.01675	-.02246	.46164	.09457	.01431	-.02409
30.000	.49197	.04482	-.02863	.09953	.01732	-.02276	.48462	.09570	.01464	-.02445
45.000	.50835	.04354	-.04468	.09527	.01638	-.02055	.50151	.09549	.01415	-.02216
60.000	.52282	.04269	-.06101	.09204	.01647	-.01927	.51549	.09709	.01437	-.02088
GRADIENT	.00088	.00006	-.00043	.00081	.00023	-.00107	.00087	.00015	.00012	-.00108

RN/L = 3.29 GRADIENT INTERVAL = .00/ 12.00

ALPHAO = 14.000

DZ	CN	CA	CLM	CY	CBL	CYN	CL	CD	CSL	CLN
.000	.38218	.04118	.14653	.09287	.01348	-.00958	.37578	.08098	.01240	-.01094
3.000	.38458	.04230	.13903	.09595	.01454	-.01493	.37785	.08225	.01280	-.01637
7.500	.39143	.04380	.12876	.10074	.01530	-.01986	.38469	.08457	.01314	-.02135
15.000	.41422	.04577	.08036	.09794	.01545	-.01939	.40717	.08892	.01329	-.02139
30.000	.45114	.04539	.02332	.09970	.01697	-.02249	.44393	.09229	.01453	-.02414
45.000	.47649	.04496	-.00908	.09637	.01669	-.02111	.46918	.09452	.01438	-.02274
60.000	.49537	.04336	-.02754	.09573	.01663	-.02081	.48812	.09491	.01436	-.02244
GRADIENT	.00126	.00036	-.00236	.00103	.00024	-.00135	.00121	.00049	.00008	-.00137

CA20 747/1 01 SI CARRIER DATA (MGN078) (25 NOV 75)

REFERENCE DATA

SREF =	5500.0000 SQ.FT.	XMRP =	1339.9000 IN.XC		
LREF =	327.7800 IN.	YMRP =	.0000 IN.YC		
BREF =	2348.0400 IN.	ZMRP =	190.8000 IN.ZC		
SCALE =	.0300				

PARAMETRIC DATA

ELV-IB =	.000	ELV-OB =	3.000
ELEVON =	5.000	MACH =	.600
BETAO =	.000	BETAC =	-5.000
PHI =	7.500	DY =	.000
DX =	.000	ALPHAC =	8.000

RN/L = 3.21 GRADIENT INTERVAL = .00/ 12.00

ALPHAO = 10.000

DZ	CN	CA	CLM	CY	CBL	CYN	CL	CD	CSL	CLN
.000	.82864	.00154	-.10748	.09484	.01550	-.01284	.81578	.14541	.01303	-.01533
3.000	.83061	.00072	-.10433	.09578	.01626	-.01636	.81786	.14494	.01317	-.01893
7.500	.83770	.00014	-.10926	.09536	.01662	-.01777	.82495	.14560	.01328	-.02039
15.000	.84646	-.00047	-.11092	.09414	.01746	-.01889	.83368	.14652	.01392	-.02163
30.000	.86263	-.00150	-.10551	.08794	.01718	-.01632	.84979	.14832	.01409	-.01906
45.000	.87522	-.00218	-.10377	.08940	.01784	-.01714	.86230	.14983	.01459	-.01993
60.000	.88450	-.00294	-.10501	.09060	.01846	-.01756	.87157	.15069	.01513	-.02050
GRADIENT	.00124	-.00018	-.00031	.00006	.00014	-.00063	.00125	.00004	.00003	-.00065

RN/L = 3.30 GRADIENT INTERVAL = .00/ 12.00

ALPHAO = 14.000

DZ	CN	CA	CLM	CY	CBL	CYN	CL	CD	CSL	CLN
.000	.75257	.00079	-.01807	.09609	.01593	-.01219	.74100	.13146	.01357	-.01477
3.000	.75628	.00068	-.01820	.09751	.01635	-.01589	.74467	.13199	.01335	-.01849
7.500	.76892	.00055	-.03358	.09638	.01659	-.01758	.75715	.13406	.01329	-.02020
15.000	.79006	.00001	-.05627	.09038	.01636	-.01582	.77806	.13721	.01337	-.01842
30.000	.82242	-.00160	-.07622	.09500	.01813	-.01986	.81020	.14124	.01441	-.02271
45.000	.84435	-.00210	-.08458	.08971	.01761	-.01722	.83189	.14456	.01435	-.02002
60.000	.86023	-.00292	-.09071	.09069	.01794	-.01770	.84767	.14650	.01460	-.02055
GRADIENT	.00223	-.00003	-.00217	.00002	.00009	-.00069	.00220	.00036	-.00004	-.00070

CA20 747/1 01 SI CARRIER DATA (MSN079) (25 NOV 75)

REFERENCE DATA

SREF = 5500.0000 SQ.FT. XMRP = 1339.9000 IN.XC
LREF = 327.7800 IN. YMRP = .0000 IN.YC
BREF = 2348.0400 IN. ZMRP = 190.8000 IN.ZC
SCALE = .0300

PARAMETRIC DATA

ELV-IB =	.000	ELV-OB =	3.000
ELEVON =	5.000	MACH =	.600
BETAO =	.000	BETAC =	-5.000
PHI =	7.500	DY =	.000
DX =	10.000	ALPHAC =	8.000

RN/L = 3.28 GRADIENT INTERVAL = .00/ 12.00

ALPHAO = 10.000

DZ	CN	CA	CLM	CY	CBL	CYN	CL	CD	CSL	CLN
.000	.83817	.00016	-.11591	.09708	.01580	-.01235	.82541	.14570	.01322	-.01488
3.000	.83656	-.00014	-.10749	.09920	.01657	-.01676	.82388	.14513	.01341	-.01939
7.500	.83989	-.00051	-.10843	.10178	.01733	-.02019	.82721	.14534	.01356	-.02290
15.000	.84874	-.00069	-.11438	.09831	.01779	-.01940	.83597	.14670	.01415	-.02220
30.000	.86153	-.00145	-.10721	.09139	.01789	-.01757	.84869	.14818	.01457	-.02041
45.000	.87389	-.00250	-.09954	.09179	.01851	-.01744	.86104	.14928	.01520	-.02039
60.000	.88051	-.00405	-.09936	.09007	.01879	-.01546	.86784	.14691	.01582	-.01849
GRADIENT	.00027	-.00009	.00090	.00062	.00023	-.00102	.00028	-.00004	.00004	-.00105

RN/L = 3.27 GRADIENT INTERVAL = .00/ 12.00

ALPHAO = 14.000

DZ	CN	CA	CLM	CY	CBL	CYN	CL	CD	CSL	CLN
.000	.77856	-.00063	-.01019	.09926	.01381	-.01150	.76684	.13457	.01161	-.01372
3.000	.77540	-.00053	.00224	.10130	.01483	-.01653	.76371	.13412	.01173	-.01685
7.500	.78195	-.00045	-.00903	.10600	.01606	-.02231	.77016	.13534	.01194	-.02476
15.000	.79319	-.00031	-.03614	.09622	.01578	-.01857	.78612	.13830	.01232	-.02103
30.000	.82363	-.00089	-.05901	.09715	.01699	-.02104	.81127	.14215	.01308	-.02357
45.000	.84150	-.00133	-.07112	.09081	.01683	-.01741	.82895	.14481	.01355	-.02007
60.000	.85569	-.00242	-.07990	.09303	.01764	-.01829	.84311	.14621	.01419	-.02107
GRADIENT	.00053	.00002	-.00006	.00091	.00030	-.00143	.00052	.00012	.00004	-.00146

CA20 747/1 01 S1 CARRIER DATA (MGN080) (25 NOV 75)

REFERENCE DATA

SREF = 5500.0000 SQ.FT. XMRP = 1339.9000 IN.XC
LREF = 327.7800 IN. YMRP = .0000 IN.YC
BREF = 2348.0400 IN. ZMRP = 190.8000 IN.ZC
SCALE = .0300

PARAMETRIC DATA

ELV-IB =	.000	ELV-OB =	3.000
ELEVON =	5.000	MACH =	.600
BETAO =	.000	BETAC =	-5.000
PHI =	7.500	DY =	10.000
DX =	.000	ALPHAC =	4.000

RN/L = 3.33 GRADIENT INTERVAL = .00/ 12.00

ALPHAO = 10.000

DZ	CN	CA	CLM	CY	CBL	CYN	CL	CD	CSL	CLN
.000	.43240	.05081	-.05078	.08118	.02096	-.01861	.42472	.09572	.01890	-.02070
3.000	.43774	.05034	-.03967	.08059	.02097	-.01835	.43008	.09582	.01894	-.02044
7.500	.44870	.04998	-.03822	.07958	.02022	-.01737	.44102	.09561	.01829	-.01939
15.000	.46397	.04906	-.03936	.07806	.01869	-.01550	.45630	.09729	.01697	-.01737
30.000	.48930	.04678	-.04409	.08058	.01697	-.01536	.48173	.09767	.01527	-.01705
45.000	.50536	.04498	-.05379	.08608	.01680	-.01782	.49789	.09756	.01484	-.01947
60.000	.51766	.04398	-.06952	.09446	.01738	-.02203	.51023	.09785	.01498	-.02372
GRADIENT	.00219	-.00011	.00157	-.00021	-.00010	.00017	.00219	.00012	-.00009	.00018

RN/L = 3.32 GRADIENT INTERVAL = .00/ 12.00

ALPHAO = 14.000

DZ	CN	CA	CLM	CY	CBL	CYN	CL	CD	CSL	CLN
.000	.35407	.04993	.05896	.06536	.02352	-.01586	.34691	.08667	.02174	-.01823
3.000	.36034	.04984	.05994	.06652	.02361	-.01563	.35315	.08723	.02185	-.01801
7.500	.37579	.04985	.04771	.06748	.02296	-.01481	.36852	.08886	.02128	-.01713
15.000	.40127	.05016	.03116	.06569	.02052	-.01194	.39383	.09183	.01916	-.01402
30.000	.44266	.04913	-.00338	.06521	.01634	-.00839	.43510	.09513	.01539	-.01005
45.000	.47085	.04714	-.02326	.08000	.01664	-.01487	.46334	.09610	.01499	-.01653
60.000	.49062	.04531	-.03991	.08792	.01695	-.01850	.48320	.09635	.01492	-.02017
GRADIENT	.00294	-.00001	-.00160	.00028	-.00008	.00014	.00292	.00030	-.00007	.00015

CA20 747/1 01 SI CARRIER DATA (MGN081) (25 NOV 75)

REFERENCE DATA

SREF = 5500.0000 SQ.FT. XMRP = 1339.9000 IN.XC
LREF = 327.7800 IN. YMRP = .0000 IN.YC
BREF = 2548.0400 IN. ZMRP = 190.8000 IN.ZC
SCALE = .0300

PARAMETRIC DATA

ELV-IB =	.000	ELV-OB =	3.000
ELEVON =	5.000	MACH =	.600
BETAO =	.000	BETAC =	-5.000
PHI =	7.500	DY =	10.000
DX =	10.000	ALPHAC =	4.000

RN/L = 3.26 GRADIENT INTERVAL = .00/ 12.00

ALPHAO = 10.000

DZ	CN	CA	CLM	CY	CBL	CYN	CL	CD	CSL	CLN
.000	.45223	.04648	-.03946	.08484	.02022	-.01877	.44489	.09350	.01814	-.02078
3.000	.45477	.04662	-.03489	.08471	.02023	-.01894	.44741	.09390	.01814	-.02095
7.500	.46190	.04695	-.03546	.08424	.01958	-.01834	.45446	.09497	.01765	-.02029
15.000	.47404	.04673	-.03944	.08249	.01852	-.01708	.46656	.09302	.01653	-.01893
30.000	.49366	.04536	-.04454	.08275	.01702	-.01634	.48621	.09671	.01522	-.01803
45.000	.50886	.04378	-.05517	.08755	.01682	-.01830	.50160	.09574	.01482	-.01985
60.000	.52507	.04181	-.06811	.09435	.01711	-.02142	.51783	.09546	.01477	-.02309
GRADIENT	.00131	.00006	.00048	-.00008	-.00008	.00006	.00130	.00020	-.00007	.00007

RN/L = 3.25 GRADIENT INTERVAL = .00/ 12.00

ALPHAO = 14.000

DZ	CN	CA	CLM	CY	CBL	CYN	CL	CD	CSL	CLN
.000	.38428	.04342	.06236	.07781	.02212	-.01814	.38759	.08439	.02011	-.02035
3.000	.38680	.04434	.05483	.07656	.02250	-.01775	.38949	.08552	.02052	-.02001
7.500	.40389	.04518	.05624	.07503	.02200	-.01651	.39694	.08715	.02015	-.01872
15.000	.42142	.04654	.03910	.07066	.01990	-.01306	.41425	.09033	.01843	-.01507
30.000	.45492	.04655	-.00211	.06798	.01606	-.00912	.44756	.09385	.01502	-.01075
45.000	.47224	.04521	-.02046	.08235	.01661	-.01566	.47090	.09495	.01468	-.01731
60.000	.49675	.04370	-.03890	.08862	.01676	-.01863	.48946	.09539	.01472	-.02028
GRADIENT	.00131	.00023	-.00090	-.00037	-.00002	.00022	.00128	.00037	-.00000	.00022

ORIGINAL PAGE IS
OF POOR QUALITY

CA20 747/1 01 S1 CARRIER DATA (MGN082) (25 NOV 75)

REFERENCE DATA

SREF = 5500.0000 SQ.FT. XMRP = 1339.9000 IN.XC
LREF = 327.7800 IN. YMRP = .0000 IN.YC
BREF = 2348.0400 IN. ZMRP = 190.8000 IN.ZC
SCALE = .0300

PARAMETRIC DATA

ELV-IB =	.000	ELV-OB =	3.000
ELEVON =	5.000	MACH =	.600
BETAO =	.000	BETAC =	-5.000
PHI =	7.500	DY =	10.000
DX =	.000	ALPHAC =	8.000

RN/L = 3.26 GRADIENT INTERVAL = .00/ 12.00

ALPHAO = 10.000

DZ	CN	CA	CLM	CY	CBL	CYN	CL	CD	CSL	CLN
.000	.82997	.00292	-.15004	.07841	.01966	-.01604	.81685	.14700	.01658	-.01921
3.000	.83172	.00195	-.14180	.07827	.01975	-.01564	.81874	.14635	.01673	-.01883
7.500	.83602	.00125	-.13270	.07761	.01935	-.01478	.82310	.14640	.01649	-.01792
15.000	.84568	.00030	-.12045	.07735	.01884	-.01368	.83278	.14715	.01618	-.01674
30.000	.86204	-.00154	-.11260	.08103	.01830	-.01433	.84921	.14817	.01553	-.01729
45.000	.87488	-.00247	-.11099	.08496	.01817	-.01577	.86202	.14949	.01516	-.01859
60.000	.88687	-.00340	-.10764	.08922	.01784	-.01732	.87399	.15065	.01466	-.02017
GRADIENT	.00082	-.00022	.00229	-.00011	-.00004	.00017	.00084	-.00007	-.00001	.00018

RN/L = 3.28 GRADIENT INTERVAL = .00/ 12.00

ALPHAO = 14.000

DZ	CN	CA	CLM	CY	CBL	CYN	CL	CD	CSL	CLN
.000	.74187	.00418	-.06401	.06510	.02322	-.01411	.72988	.13294	.02042	-.01793
3.000	.74989	.00369	-.06065	.06572	.02256	-.01349	.73786	.13385	.01997	-.01720
7.500	.76286	.00322	-.05255	.06466	.02125	-.01139	.75072	.13564	.01895	-.01491
15.000	.78415	.00223	-.07213	.06282	.01898	-.00838	.77184	.13837	.01723	-.01155
30.000	.81707	.00025	-.08187	.06795	.01707	-.00794	.80461	.14212	.01543	-.01078
45.000	.84094	-.00153	-.08998	.08103	.01813	-.01412	.82843	.14452	.01540	-.01705
60.000	.85959	-.00258	-.09751	.08552	.01803	-.01589	.84698	.14673	.01499	-.01878
GRADIENT	.00281	-.00013	.00015	-.00007	-.00027	.00037	.00278	.00036	-.00020	.00041

CA20 747/1 01 S1 CARRIER DATA (NGN083) (25 NOV 75)

REFERENCE DATA

SREF = 5500.0000 SQ.FT. XMRP = 1339.9000 IN.XC
LREF = 327.7800 IN. YMRP = .0000 IN.YC
BREF = 2348.0400 IN. ZMRP = 190.8000 IN.ZC
SCALE = .0300

PARAMETRIC DATA

ELV-IB =	.000	ELV-OB =	3.000
ELEVON =	5.000	MACH =	.600
BETAO =	.000	BETAC =	-5.000
PHI =	7.500	DY =	10.000
DX =	10.000	ALPHAC =	8.000

RN/L = 3.25 GRADIENT INTERVAL = .00/ 12.00

ALPHAO = 10.000

DZ	CN	CA	CLM	CY	CBL	CYN	CL	CD	CSL	CLN
.000	.84015	.00060	-.14835	.08073	.01842	-.01598	.82728	.14548	.01537	-.01694
3.000	.84201	.00022	-.14315	.08140	.01858	-.01634	.82918	.14643	.01546	-.01932
7.500	.84499	.00010	-.13469	.08132	.01838	-.01597	.83204	.14692	.01533	-.01892
15.000	.84980	.00011	-.12170	.07980	.01769	-.01452	.83697	.14769	.01480	-.01737
30.000	.85421	-.00074	-.11571	.08157	.01740	-.01464	.85120	.14934	.01460	-.01744
45.000	.87576	-.00159	-.11281	.08559	.01728	-.01602	.86273	.15051	.01423	-.01878
60.000	.89300	-.00271	-.10266	.08976	.01609	-.01692	.87005	.15067	.01290	-.01946
GRADIENT	.00063	-.00006	.00183	.00007	-.00001	.00001	.00083	.00005	-.00001	.00001

RN/L = 3.24 GRADIENT INTERVAL = .00/ 12.00

ALPHAO = 14.000

DZ	CN	CA	CLM	CY	CBL	CYN	CL	CD	CSL	CLN
.000	.77900	.00051	-.05355	.07220	.02063	-.01465	.76708	.13577	.01777	-.01601
3.000	.78147	.00077	-.04917	.07146	.02011	-.01404	.76946	.13646	.01737	-.01732
7.500	.78100	.00057	-.05367	.06998	.01926	-.01228	.77889	.13792	.01683	-.01544
15.000	.80532	.00075	-.06103	.05444	.01701	-.00818	.79295	.14058	.01533	-.01101
30.000	.82889	.00011	-.07395	.06925	.01596	-.00851	.81626	.14404	.01415	-.01113
45.000	.84784	-.00113	-.08512	.08156	.01721	-.01463	.83515	.14611	.01440	-.01739
60.000	.86316	-.00213	-.09291	.08535	.01672	-.01583	.85041	.14779	.01372	-.01849
GRADIENT	.00164	.00000	-.00009	-.00030	-.00018	.00032	.00161	.00029	-.00012	.00035

CA20 7471 01 S1 CARRIER DATA (MGN084) (25 NOV 75)

REFERENCE DATA

SREF =	5500.0000 SQ.FT.	XMRP =	1339.9000 IN.XC
LREF =	327.7800 IN.	YMRP =	.0000 IN.YC
BREF =	2348.0400 IN.	ZMRP =	190.8000 IN.ZC
SCALE =	.0300		

PARAMETRIC DATA

ELV-IB =	.000	ELV-OB =	3.000
ELEVON =	5.000	MACH =	.600
BETAO =	.000	BETAC =	.000
PHI =	7.500	DY =	.000
DX =	.000	ALPHAC =	4.000

RN/L = 3.18 GRADIENT INTERVAL = .00/ 12.00

ALPHAO = 10.000

DZ	CN	CA	CLM	CY	CBL	CYN	CL	CD	CSL	CLN
.000	.41572	.05411	.04265	-.02149	-.00318	.00718	.40779	.09727	-.00241	.00747
3.000	.42519	.05401	.03677	-.01688	-.00266	.00495	.41722	.09816	-.00213	.00520
7.500	.43755	.05353	.01721	-.01393	-.00202	.00353	.42956	.09897	-.00164	.00372
15.000	.46051	.05251	-.00641	-.01212	-.00189	.00280	.45260	.10036	-.00159	.00299
30.000	.48807	.05048	-.03493	-.01093	-.00171	.00286	.48012	.10122	-.00140	.00303
45.000	.50713	.04885	-.04697	-.00881	-.00102	.00169	.49925	.10159	-.00084	.00179
60.000	.52622	.04729	-.05679	-.00629	-.00018	.00014	.51840	.10203	-.00017	.00016
GRADIENT	.00290	-.00008	-.00347	.00098	.00015	-.00047	.00289	.00022	.00010	-.00049

RN/L = 3.19 GRADIENT INTERVAL = .00/ 12.00

ALPHAO = 14.000

DZ	CN	CA	CLM	CY	CBL	CYN	CL	CD	CSL	CLN
.000	.31987	.05016	.18402	-.03393	-.00506	.01404	.31288	.08332	-.00357	.01449
3.000	.33341	.05051	.17029	-.02826	-.00404	.01102	.32630	.08508	-.00285	.01138
7.500	.35356	.05224	.13777	-.02179	-.00351	.00757	.34616	.08991	-.00280	.00780
15.000	.38776	.05380	.08838	-.01361	-.00268	.00337	.38001	.09404	-.00231	.00363
30.000	.43998	.05309	.01706	-.01123	-.00207	.00310	.43202	.09879	-.00173	.00330
45.000	.47171	.05131	-.01180	-.00852	-.00134	.00180	.46376	.10033	-.00114	.00193
60.000	.49355	.04941	-.03250	-.00785	-.00095	.00123	.48558	.10073	-.00082	.00132
GRADIENT	.00449	.00029	-.00625	.00160	.00019	-.00086	.00444	.00075	.00010	-.00087

CA20 747/1 01 SI CARRIER DATA (MGN095) (25 NOV 75)

REFERENCE DATA

SREF = 5500.0000 SQ.FT. XMRP = 1339.9000 IN.XC
LREF = 327.7800 IN. YMRP = .0000 IN.YC
BREF = 2348.0400 IN. ZMRP = 190.8000 IN.ZC
SCALE = .0300

PARAMETRIC DATA

ELV-IB =	.000	ELV-OB =	3.000
ELEVON =	5.000	MACH =	.600
ESTAO =	.000	BETAC =	.000
PHI =	7.500	DY =	.000
DX =	10.000	ALPHAC =	4.000

RN/L = 3.25 GRADIENT INTERVAL = .00/ 12.00

ALPHAO = 10.000

DZ	CN	CA	CLM	CY	CBL	CYN	CL	CD	CSL	CLN
.000	.43554	.05206	.03918	-.02079	-.00297	.00734	.42722	.09724	-.00219	.00781
3.000	.43894	.05260	.03544	-.01800	-.00270	.00623	.43105	.09909	-.00204	.00648
7.500	.44080	.05255	.02484	-.01361	-.00193	.00381	.44005	.09909	-.00152	.00399
15.000	.46523	.05199	-.00280	-.01092	-.00166	.00262	.45725	.10034	-.00138	.00278
30.000	.49135	.05047	-.03277	-.01035	-.00150	.00275	.48338	.10156	-.00120	.00290
45.000	.50822	.04934	-.04510	-.00821	-.00090	.00166	.50029	.10209	-.00072	.00175
60.000	.52236	.04795	-.05869	-.00813	-.00066	.00131	.51449	.10229	-.00052	.00137
GRADIENT	.00175	.00006	-.00206	.00097	.00014	-.00048	.00173	.00024	.00009	-.00049

RN/L = 3.26 GRADIENT INTERVAL = .00/ 12.00

ALPHAO = 14.000

DZ	CN	CA	CLM	CY	CBL	CYN	CL	CD	CSL	CLN
.000	.33305	.04509	.19164	-.02570	-.00410	.01058	.35635	.09279	-.00299	.01095
3.000	.33909	.04778	.17746	-.02458	-.00419	.00975	.36108	.08599	-.00315	.01014
7.500	.38139	.05035	.14807	-.01762	-.00319	.00591	.37484	.08994	-.00255	.00821
15.000	.41110	.05133	.08623	-.01203	-.00234	.00305	.40349	.09402	-.00201	.00326
30.000	.45100	.05096	.02417	-.00924	-.00172	.00226	.44320	.09782	-.00147	.00243
45.000	.47828	.04977	-.00932	-.00845	-.00132	.00182	.47046	.09949	-.00113	.00195
60.000	.49429	.04931	-.02556	-.00807	-.00100	.00145	.48643	.10070	-.00085	.00154
GRADIENT	.00249	.00069	-.00597	.00113	.00013	-.00054	.00240	.00095	.00006	-.00065

CA20 747/1 01 S1 CARRIER DATA (HGN086) (25 NOV 75)

REFERENCE DATA

SREF = 5500.0000 SQ.FT. XMRP = 1339.9000 IN.XC
LREF = 327.7800 IN. YMRP = .0000 IN.YC
BREF = 2348.0400 IN. ZMRP = 190.8000 IN.ZC
SCALE = .0300

PARAMETRIC DATA

ELV-IB = .000 ELV-OB = 3.000
ELEVON = 5.000 MACH = .600
BETAO = .000 BETAC = .000
PHI = 7.500 DY = .000
DX = .000 ALPHAC = 8.000

RN/L = 3.22 GRADIENT INTERVAL = .00/ 12.00

ALPHAO = 10.000

DZ	CN	CA	CLM	CY	CBL	CYN	CL	CD	CSL	CLN
.000	.82735	.00889	-.11055	-.01556	-.00151	.00302	.81323	.15242	-.00096	.00324
3.000	.83020	.00837	-.10334	-.01486	-.00148	.00323	.81613	.15240	-.00089	.00343
7.500	.83699	.00744	-.09987	-.01367	-.00143	.00315	.82299	.15267	-.00086	.00335
15.000	.84531	.00621	-.09696	-.01285	-.00135	.00308	.83139	.15290	-.00079	.00327
30.000	.85911	.00533	-.09020	-.01046	-.00095	.00238	.84513	.15443	-.00053	.00251
45.000	.97007	.00560	-.08362	-.00956	-.00008	.00205	.85597	.15560	.00027	.00203
60.000	.88028	.00592	-.08244	-.01034	.00130	.00216	.86587	.15969	.00165	.00190
GRADIENT	.00130	-.00019	.00137	.00025	.00001	.00001	.00132	.00004	.00001	.00001

RN/L = 3.21 GRADIENT INTERVAL = .00/ 12.00

ALPHAO = 14.000

DZ	CN	CA	CLM	CY	CBL	CYN	CL	CD	CSL	CLN
.000	.74154	.00885	.00472	-.02288	-.00360	.00700	.72874	.13748	-.00233	.00752
3.000	.75159	.00871	-.00554	-.01966	-.00307	.00582	.73966	.13909	-.00201	.00626
7.500	.76772	.00794	-.02657	-.01576	-.00242	.00416	.75467	.14113	-.00166	.00451
15.000	.78878	.00649	-.04694	-.01295	-.00218	.00327	.77567	.14337	-.00159	.00359
30.000	.81926	.00504	-.06262	-.01089	-.00193	.00269	.80594	.14723	-.00144	.00297
45.000	.83812	.00472	-.06674	-.00893	-.00123	.00171	.82457	.15019	-.00091	.00190
60.000	.85281	.00473	-.06762	-.00915	-.00088	.00168	.83904	.15274	-.00057	.00181
GRADIENT	.00350	-.00013	-.00421	.00094	.00016	-.00038	.00347	.00048	.00009	-.00040

CA20 747/1 01 S1 CARRIER DATA (MGN087) (25 NOV 75)

REFERENCE DATA

SREF =	5500.0000 SQ.FT.	XMRP =	1339.9000 IN.XC		
LREF =	327.7800 IN.	YMRP =	.0000 IN.YC		
BREF =	2348.0400 IN.	ZMRP =	190.8000 IN.ZC		
SCALE =	.0300				

PARAMETRIC DATA

ELV-IB =	.000	ELV-OB =	3.000
ELEVON =	5.000	MACH =	.600
BETAO =	.000	BETAC =	.000
PHI =	7.500	DY =	.000
DX =	10.000	ALPHAC =	8.000

RN/L = 3.28 GRADIENT INTERVAL = .00/ 12.00

ALPHAO = 10.000

DZ	CN	CA	CLM	CY	CBL	CYN	CL	CD	CSL	CLN
.000	.83244	.00796	-.10724	-.01432	-.00049	.00304	.81891	.15239	.00006	.00309
3.000	.83315	.00748	-.09890	-.01322	-.00057	.00296	.81919	.15205	-.00005	.00301
7.500	.83669	.00686	-.09264	-.01253	-.00078	.00290	.82278	.15204	-.00025	.00299
15.000	.84168	.00625	-.09265	-.01189	-.00058	.00281	.82781	.15231	-.00009	.00287
30.000	.85051	.00579	-.09328	-.01061	-.00034	.00266	.83538	.15339	.00013	.00268
45.000	.85170	.00629	-.07493	-.00879	.00099	.00215	.84750	.15591	.00135	.00194
60.000	.87103	.00628	-.07577	-.01027	.00332	.00269	.85571	.15743	.00374	.00207
GRADIENT	.00059	-.00015	.00190	.00023	-.00004	-.00002	.00060	-.00004	-.00004	-.00001

RN/L = 3.27 GRADIENT INTERVAL = .00/ 12.00

ALPHAO = 14.000

DZ	CN	CA	CLM	CY	CBL	CYN	CL	CD	CSL	CLN
.000	.76855	.00694	.01450	-.01995	-.00233	.00610	.75567	.14029	-.00124	.00542
3.000	.77039	.00728	.01700	-.01818	-.00251	.00551	.75742	.14095	-.00151	.00535
7.500	.78177	.00632	-.00141	-.01546	-.00196	.00437	.76879	.14193	-.00117	.00455
15.000	.79594	.00574	-.02192	-.01300	-.00208	.00346	.78285	.14365	-.00145	.00377
30.000	.81891	.00472	-.04296	-.01030	-.00194	.00254	.80555	.14583	-.00147	.00284
45.000	.83263	.00470	-.04933	-.00771	-.00164	.00135	.81916	.14921	-.00079	.00152
60.000	.84599	.00481	-.05425	-.00890	-.00077	.00173	.83231	.15164	-.00043	.00183
GRADIENT	.00182	-.00009	-.00228	.00060	.00006	-.00023	.00181	.00023	.00001	-.00024

ORIGINAL PAGE IS
OF POOR QUALITY

CA20 747/1 01 SI CARRIER DATA (MGN088) (25 NOV 75)

REFERENCE DATA

SREF = 5500.0000 SQ.FT. XMRP = 1339.9000 IN.XC
LREF = 327.7800 IN. YMRP = .0000 IN.YC
BREF = 2348.0400 IN. ZMRP = 190.8000 IN.ZC
SCALE = .0300

PARAMETRIC DATA

ELV-IB =	.000	ELV-OB =	3.000
ELEVON =	5.000	MACH =	.600
BETAO =	.000	BETAC =	.000
PHI =	7.500	DY =	10.000
DX =	.000	ALPHAC =	4.000

RN/L = 3.34 GRADIENT INTERVAL = .00/ 12.00

ALPHAO = 10.000

DZ	CN	CA	CLM	CY	CBL	CYN	CL	CD	CSL	CLN
.000	.42243	.05578	.02193	-.02600	.00489	.00148	.41429	.09963	.00501	.00096
3.000	.42869	.05522	.02276	-.02138	.00433	.00081	.42057	.09973	.00437	.00015
7.500	.44136	.05468	.01216	-.01782	.00355	.00056	.43322	.10051	.00359	.00018
15.000	.46110	.05360	-.01113	-.01838	.00188	.00275	.45297	.10150	.00216	.00254
30.000	.48937	.05138	-.03722	-.01752	.00044	.00458	.48132	.10225	.00091	.00459
45.000	.50750	.04955	-.04931	-.01447	-.00035	.00405	.49954	.10233	.00007	.00407
60.000	.52440	.04781	-.05381	-.00955	-.00142	.00292	.51653	.10237	-.00111	.00305
GRADIENT	.00255	-.00015	-.00139	.00107	-.00018	-.00011	.00255	.00012	-.00019	-.00010

RN/L = 3.32 GRADIENT INTERVAL = .00/ 12.00

ALPHAO = 14.000

DZ	CN	CA	CLM	CY	CBL	CYN	CL	CD	CSL	CLN
.000	.33018	.05494	.16507	-.04187	.00889	.00211	.32263	.08915	.00936	.00117
3.000	.34330	.05405	.14407	-.03607	.00753	.00209	.33577	.08964	.00771	.00129
7.500	.36197	.05329	.11717	-.03116	.00556	.00298	.35442	.09084	.00594	.00237
15.000	.39449	.05378	.07115	-.03177	.00269	.00716	.38570	.09472	.00342	.00534
30.000	.44294	.05270	.00925	-.02650	.00014	.00803	.43591	.09972	.00098	.00798
45.000	.47202	.05134	-.01793	-.01972	-.00033	.00596	.46406	.10040	.00029	.00595
60.000	.49317	.04994	-.03512	-.01446	-.00052	.00406	.48526	.10111	-.00009	.00409
GRADIENT	.00423	-.00022	-.00635	.00140	-.00043	.00012	.00423	.00023	-.00041	.00017

CA20 747/1 01 S1 CARRIER DATA (MGN089) (25 NOV 75)

REFERENCE DATA

SREF =	5500.0000 SQ.FT.	XMRP =	1339.9000 IN.XC		
LREF =	327.7800 IN.	YMRP =	.0000 IN.YC		
BREF =	2348.0400 IN.	ZMRP =	190.8000 IN.ZC		
SCALE =	.0300				

PARAMETRIC DATA

ELV-IB =	.000	ELV-OB =	3.000
ELEVON =	5.000	MACH =	.600
BETAO =	.000	BETAC =	.000
PHI =	7.500	DY =	10.000
DX =	10.000	ALPHAC =	4.000

RN/L = 3.32 GRADIENT INTERVAL = .00/ 12.00

ALPHAO = 10.000

DZ	CN	CA	CLM	CY	CBL	CYN	CL	CD	CSL	CLN
.000	.44359	.05258	.01473	-.02090	.00374	.00087	.43566	.09866	.00381	.00047
3.000	.44776	.05268	.01460	-.01795	.00320	.00042	.43980	.09919	.00322	.00008
7.500	.45793	.05215	.00429	-.01578	.00259	.00027	.44997	.09973	.00260	.00000
15.000	.47297	.05170	-.01942	-.01666	.00134	.00237	.46498	.10095	.00159	.00221
30.000	.49582	.04981	-.04099	-.01771	-.00017	.00462	.48789	.10135	.00031	.00451
45.000	.51280	.04845	-.05708	-.01538	-.00079	.00435	.50492	.10179	-.00033	.00442
60.000	.53102	.04751	-.08059	-.01421	-.00119	.00448	.52314	.10278	-.00072	.00458
GRADIENT	.00194	-.00005	-.00146	.00067	-.00015	-.00009	.00193	.00014	-.00016	-.00006

RN/L = 3.26 GRADIENT INTERVAL = .00/ 12.00

ALPHAO = 14.000

DZ °	CN	CA	CLM	CY	CBL	CYN	CL	CD	CSL	CLN
.000	.37863	.04836	.14450	-.02958	.00735	.00018	.37147	.08798	.00733	-.00059
3.000	.38311	.04923	.13312	-.02567	.00627	.00026	.37686	.08911	.00627	-.00040
7.500	.39359	.05001	.11289	-.02593	.00466	.00246	.38819	.09103	.00489	.00196
15.000	.42155	.05056	.06539	-.03071	.00175	.00792	.41395	.09435	.00255	.00763
30.000	.45849	.04999	.00547	-.02368	.00015	.00702	.45075	.09764	.00088	.00597
45.000	.48339	.04892	-.02212	-.01993	-.00075	.00627	.47563	.09918	-.00009	.00531
60.000	.50223	.04792	-.04122	-.01524	-.00080	.00442	.49447	.10015	-.00033	.00448
GRADIENT	.00228	.00018	-.00424	.00044	-.00036	.00032	.00225	.00042	-.00032	.00035

CA20 747/1 01 S1 CARRIER DATA (HGN090) (25 NOV 75)

REFERENCE DATA

SREF = 5000.0000 SQ.FT. XMRP = 1300.0000 IN.XC
LREF = 327.7000 IN. YMRP = .0000 IN.YC
BREF = 2540.0400 IN. ZMRP = 100.0000 IN.ZC
SCALE = .0300

PARAMETRIC DATA

ELV-IB =	.000	ELV-OB =	3.000
ELEVON =	5.000	MACH =	.600
BETAO =	.000	BETAC =	.000
PHI =	7.500	DY =	10.000
DX =	.000	ALPHAC =	8.000

RN/L = 3.27 GRADIENT INTERVAL = .00/ 12.00

ALPHAO = 10.000

DZ	CN	CA	CLM	CY	CBL	CYN	CL	CD	CSL	CLN
.000	.83023	.00823	-.09514	-.02040	.00154	-.00234	.81434	.15208	.00111	-.00257
3.000	.83302	.00754	-.09300	-.01882	.00117	-.00143	.81810	.15171	.00090	-.00161
7.500	.83729	.00812	-.09357	-.01943	.00029	.00105	.82410	.15152	.00047	.00099
15.000	.84778	.00803	-.10203	-.01756	-.00039	.00202	.83403	.15220	-.00003	.00206
30.000	.85354	.00360	-.09765	-.01895	-.00220	.00493	.84989	.15352	-.00131	.00524
45.000	.87454	.00383	-.09259	-.01489	-.00248	.00352	.86098	.15571	-.00184	.00369
60.000	.88814	.00465	-.09028	-.01065	-.00264	.00179	.87184	.15865	-.00229	.00222
GRADIENT	.00127	-.00030	-.00032	.00010	-.00017	.00046	.00130	-.00007	-.00009	.00048

RN/L = 3.28 GRADIENT INTERVAL = .00/ 12.00

ALPHAO = 14.000

DZ	CN	CA	CLM	CY	CBL	CYN	CL	CD	CSL	CLN
.000	.74214	.00770	.01851	-.03389	.00543	-.00133	.72953	.13646	.00512	-.00225
3.000	.74989	.00731	-.00043	-.03285	.00406	.00092	.73693	.13736	.00416	.00020
7.500	.76497	.00651	-.02359	-.03445	.00201	.00539	.75222	.13924	.00292	.00496
15.000	.78814	.00510	-.05104	-.03406	-.00031	.00878	.77528	.14188	.00122	.00870
30.000	.82152	.00383	-.07189	-.02342	-.00153	.00651	.80837	.14643	-.00037	.00667
45.000	.84700	.00370	-.07621	-.01815	-.00261	.00502	.83349	.15072	-.00170	.00540
60.000	.85931	.00398	-.08031	-.01407	-.00251	.00332	.84556	.15314	-.00190	.00371
GRADIENT	.00307	-.00010	.00465	-.00010	-.00046	.00090	.00306	.00038	-.00029	.00097

CA20 747/1 01 S1 CARRIER DATA (MGN091) (25 NOV 75)

REFERENCE DATA

SREF = 5500.0000 SQ.FT. XMRP = 1339.9000 IN.XC
LREF = 327.7800 IN. YMRP = .0000 IN.YC
BREF = 2348.0400 IN. ZMRP = 190.8000 IN.ZC
SCALE = .0300

PARAMETRIC DATA

ELV-IB =	.000	ELV-OB =	3.000
ELEVON =	5.000	MACH =	.600
BETAO =	.000	BETAC =	.000
PHI =	7.500	DY =	10.000
DX =	10.000	ALPHAC =	8.000

RN/L = 3.28 GRADIENT INTERVAL = .00/ 12.00

ALPHAO = 10.000

DZ	CN	CA	CLM	CY	CBL	CYN	CL	CD	CSL	CLN
.000	.83931	.00688	-.10027	-.01727	-.00087	-.00205	.82536	.15252	-.00122	-.00187
3.000	.84085	.00635	-.09972	-.01644	-.00128	-.00113	.82699	.15227	-.00146	-.00089
7.500	.84670	.00553	-.09969	-.01737	-.00195	.00078	.83288	.15247	-.00180	.00111
15.000	.85233	.00483	-.10065	-.01652	-.00251	.00169	.83854	.15276	-.00218	.00210
30.000	.86508	.00442	-.09996	-.01971	-.00431	.00497	.85117	.15457	-.00339	.00564
45.000	.87490	.00504	-.08816	-.01590	-.00407	.00366	.86073	.15699	-.00338	.00431
60.000	.88151	.00855	-.07207	-.01305	-.00145	.00399	.87648	.16323	-.00073	.00418
GRADIENT	.00101	-.00018	.00005	-.00003	-.00015	.00038	.00103	-.00000	-.00008	.00040

RN/L = 3.26 GRADIENT INTERVAL = .00/ 12.00

ALPHAO = 14.000

DZ	CN	CA	CLM	CY	CBL	CYN	CL	CD	CSL	CLN
.000	.77893	.00562	.01685	-.03159	.00184	.00099	.76512	.14080	.00199	.00065
3.000	.78256	.00540	.01140	-.02529	.00096	.00172	.76973	.14121	.00124	.00152
7.500	.79429	.00458	-.01078	-.03238	-.00105	.00808	.78143	.14244	.00002	.00618
15.000	.80648	.00348	-.03532	-.03218	-.00284	.00853	.79657	.14399	-.00132	.00890
30.000	.83221	.00319	-.06302	-.02459	-.00385	.00683	.81901	.14765	-.00261	.00740
45.000	.85791	.00427	-.06822	-.01975	-.00518	.00569	.84413	.15318	-.00412	.00651
60.000	.86211	.00472	-.07340	-.01651	-.00380	.00402	.84820	.15436	-.00315	.00464
GRADIENT	.00209	-.00014	-.00377	-.00015	-.00039	.00070	.00209	.00022	-.00026	.00076

CA20 747/1 01 51 CARRIER DATA (MGN092) (25 NOV 75)

REFERENCE DATA

SREF = 5500.0000 SQ.FT. XMRP = 1339.9000 IN.XC
LREF = 327.7800 IN. YMRP = .0000 IN.YC
BREF = 2348.0400 IN. ZMRP = 190.8000 IN.ZC
SCALE = .0300

PARAMETRIC DATA

ELV-IB =	.000	ELV-OB =	3.000
ELEVON =	5.000	MACH =	.600
BETAO =	.000	BETAC =	5.000
PHI =	7.500	DY =	10.000
DX =	.000	ALPHAC =	4.000

RN/L = 3.38 GRADIENT INTERVAL = .00/ 12.00

ALPHAO = 10.000

DZ	CN	CA	CLM	CY	CBL	CYN	CL	CD	CSL	CLN
.000	.42898	.04916	.04184	-.12967	-.01218	.02083	.42149	.09373	-.00994	.02199
3.000	.43695	.04922	.03257	-.12743	-.01330	.02227	.42941	.09462	-.01090	.02354
7.500	.45173	.04883	.00618	-.12376	-.01414	.02280	.44416	.09578	-.01169	.02415
15.000	.46974	.04737	-.02267	-.12366	-.01553	.02532	.46221	.09621	-.01280	.02680
30.000	.49433	.04477	-.05177	-.12348	-.01736	.02824	.48694	.09620	-.01432	.02991
45.000	.51103	.04371	-.05909	-.11714	-.01742	.02597	.50367	.09689	-.01461	.02765
60.000	.52846	.04347	-.05963	-.10765	-.01716	.02180	.52102	.09847	-.01479	.02348
GRADIENT	.00305	-.00005	-.00484	.00079	-.00026	.00025	.00304	.00027	-.00023	.00028

RN/L = 3.31 GRADIENT INTERVAL = .00/ 12.00

ALPHAO = 14.000

DZ	CN	CA	CLM	CY	CBL	CYN	CL	CD	CSL	CLN
.000	.34476	.04686	.17410	-.13812	-.00885	.01956	.33797	.08264	-.00676	.02038
3.000	.35549	.04620	.14782	-.13737	-.01070	.02274	.34872	.08311	-.00826	.02373
7.500	.37268	.04686	.11468	-.13394	-.01285	.02486	.36574	.08556	-.01018	.02607
15.000	.40427	.04799	.06305	-.13111	-.01515	.02727	.39704	.08998	-.01221	.02871
30.000	.44939	.04689	-.00193	-.12528	-.01676	.02825	.44204	.09352	-.01372	.02955
45.000	.47711	.04546	-.03032	-.12090	-.01742	.02763	.46974	.09509	-.01443	.02930
60.000	.49664	.04439	-.04500	-.11584	-.01737	.02565	.48928	.09505	-.01460	.02732
GRADIENT	.00373	.00001	-.00788	.00057	-.00053	.00069	.00371	.00040	-.00045	.00074

DATE 04 DEC 75 TABULATED SOURCE DATA - CA20

CA20 747/1 01 SI CARRIER DATA (MGN093) (25 NOV 75)

REFERENCE DATA

SREF =	5500.0000 SQ.FT.	XMRP =	1339.9000 IN.XC
LREF =	327.7800 IN.	YMRP =	.0000 IN.YC
BREF =	2348.0400 IN.	ZMRP =	190.8000 IN.ZC
SCALE =	.0300		

PARAMETRIC DATA

ELV-1B =	.000	ELV-03 =	3.000
ELEVON =	5.000	MACH =	.600
BETAO =	.000	BETAC =	5.000
PHI =	7.500	DY =	10.000
DX =	10.000	ALPHAC =	4.000

RN/L = 3.28 GRADIENT INTERVAL = .00/ 12.00

ALPHAO = 10.000

DZ	CN	CA	CLM	CY	CBL	CYN	CL	CD	CSL	CLN
.000	.45090	.04662	.03107	-.12332	-.01333	.02005	.44355	.09350	-.01116	.02134
3.000	.45523	.04659	.02249	-.12177	-.01404	.02110	.44787	.09391	-.01176	.02246
7.500	.46429	.04648	-.00063	-.12050	-.01473	.02203	.45689	.09476	-.01234	.02345
15.000	.47831	.04527	-.02719	-.12188	-.01593	.02479	.47096	.09502	-.01326	.02632
30.000	.49934	.04341	-.05785	-.12336	-.01770	.02807	.49236	.09540	-.01467	.02977
45.000	.51280	.04238	-.06294	-.11746	-.01775	.02602	.50537	.09573	-.01493	.02773
60.000	.52455	.04072	-.06825	-.11042	-.01757	.02330	.51742	.09533	-.01504	.02501
GRADIENT	.00180	-.00002	-.00430	.00037	-.00018	.00026	.00180	.00017	-.00016	.00022

RN/L = 3.25 GRADIENT INTERVAL = .00/ 12.00

ALPHAO = 14.000

DZ	CN	CA	CLM	CY	CBL	CYN	CL	CD	CSL	CLN
.000	.39219	.04165	.16858	-.12793	-.01077	.01890	.37574	.08137	-.00873	.01992
3.000	.38724	.04242	.15169	-.12929	-.01277	.02237	.38059	.08266	-.01036	.02358
7.500	.40130	.04456	.11909	-.12672	-.01385	.02317	.39444	.08627	-.01136	.02449
15.000	.42629	.04491	.06070	-.12781	-.01591	.02657	.41926	.08922	-.01295	.02808
30.000	.46130	.04451	-.00163	-.12511	-.01724	.02828	.45412	.09249	-.01419	.02993
45.000	.48506	.04358	-.03246	-.12217	-.01790	.02806	.47864	.09412	-.01487	.02978
60.000	.49998	.04280	-.04805	-.11694	-.01787	.02595	.49277	.09482	-.01505	.02768
GRADIENT	.00259	.00040	-.00665	.00019	-.00040	.00054	.00254	.00066	-.00034	.00058

ORIGINAL PAGE IS
OF POOR QUALITY

CA20 747/1 01 SI CARRIER DATA (MGN094) (25 NOV 75)

REFERENCE DATA

SREF =	5500.0000 SQ.FT.	XMRP =	1339.9000 IN.XC
LREF =	327.7800 IN.	YMRP =	.0000 IN.YC
BREF =	2348.0400 IN.	ZMRP =	190.8000 IN.ZC
SCALE =	.0300		

PARAMETRIC DATA

ELV-IB =	.000	ELV-OB =	3.000
ELEVON =	5.000	MACH =	.600
BETAO =	.000	BETAC =	5.000
PHI =	7.500	DY =	10.000
DX =	.000	ALPHAC =	8.000

RN/L = 3.26 GRADIENT INTERVAL = .00/ 12.00

ALPHAO = 10.000

DZ	CN	CA	CLM	CY	CBL	CYN	CL	CD	CSL	CLN
.000	.84273	.00103	-.11936	-.12150	-.01405	.01493	.82975	.14735	-.01124	.01714
3.000	.84529	-.00021	-.12520	-.12073	-.01541	.01758	.83248	.14658	-.01212	.01999
7.500	.84869	-.00112	-.12916	-.11938	-.01623	.01969	.83599	.14627	-.01256	.02220
15.000	.85556	-.00175	-.13498	-.11971	-.01720	.02261	.84287	.14684	-.01301	.02525
30.000	.86915	-.00161	-.13256	-.11535	-.01728	.02302	.85523	.14934	-.01302	.02567
45.000	.87971	-.00152	-.12974	-.11253	-.01683	.02247	.88661	.15126	-.01247	.02502
60.000	.88963	-.00146	-.12991	-.11055	-.01577	.02210	.87637	.15304	-.01169	.02450
GRADIENT	.00079	-.00028	-.00127	.00028	-.00028	.00062	.00083	-.00014	-.00017	.00066

RN/L = 3.28 GRADIENT INTERVAL = .00/ 12.00

ALPHAO = 14.000

DZ	CN	CA	CLM	CY	CBL	CYN	CL	CD	CSL	CLN
.000	.75438	-.00018	-.00306	-.14046	-.01260	.02026	.74295	.13082	-.00889	.02214
3.000	.76378	-.00023	-.02164	-.13862	-.01418	.02282	.75221	.13241	-.01000	.02494
7.500	.77775	-.00034	-.05153	-.13524	-.01552	.02506	.76599	.13472	-.01094	.02737
15.000	.79711	-.00146	-.07711	-.12877	-.01689	.02555	.78525	.13698	-.01220	.02809
30.000	.82441	-.00100	-.10036	-.12098	-.01691	.02511	.81206	.14217	-.01219	.02764
45.000	.84373	-.00001	-.10678	-.11561	-.01614	.02379	.83091	.14651	-.01177	.02623
60.000	.85903	.00065	-.11169	-.11273	-.01532	.02300	.84488	.14963	-.01109	.02531
GRADIENT	.00311	-.00002	-.00648	.00070	-.00038	.00063	.00307	.00052	-.00027	.00069

CA20 747/1 01 S1 CARRIER DATA (MGN095) (25 NOV 75)

REFERENCE DATA

SREF	= 5500.0000 SQ.FT.	XMRP	= 1339.9000 IN.XC		
LREF	= 327.7800 IN.	YMRP	= .0000 IN.YC		
BREF	= 2348.0400 IN.	ZMRP	= 190.8000 IN.ZC		
SCALE	= .0300				

PARAMETRIC DATA

ELV-1B =	.000	ELV-OB =	3.000
ELEVON =	5.000	MACH =	.600
BETAO =	.000	BETAC =	5.000
PHI =	7.500	DY =	10.000
DX =	10.000	ALPHAC =	8.000

RN/L = 3.26 GRADIENT INTERVAL = .00/ 12.00

ALPHAO = 10.000

DZ	CN	CA	CLM	CY	CBL	CYN	CL	CD	CSL	CLN
.000	.64285	.00389	-.11786	-.11982	-.01141	.01681	.82939	.15019	-.00832	.01854
3.000	.64227	.00360	-.12010	-.11947	-.01174	.01800	.82885	.14980	-.00829	.02055
7.500	.64377	.00296	-.12277	-.11940	-.01230	.02089	.83044	.14943	-.00849	.02270
15.000	.65110	.00315	-.12804	-.12228	-.01290	.02435	.83770	.15091	-.00848	.02622
30.000	.66200	.00325	-.12596	-.11987	-.01333	.02535	.84834	.15289	-.00873	.02728
45.000	.67065	.00317	-.12430	-.11694	-.01245	.02479	.85687	.15431	-.00795	.02657
60.000	.68843	.00434	-.12811	-.11635	-.01148	.02515	.87418	.15655	-.00694	.02676
GRADIENT	.00014	-.00013	-.00065	.00005	-.00012	.00054	.00016	-.00010	-.00002	.00055

RN/L = 3.25 GRADIENT INTERVAL = .00/ 12.00

ALPHAO = 14.000

DZ	CN	CA	CLM	CY	CBL	CYN	CL	CD	CSL	CLN
.000	.78593	.00007	-.08423	-.13243	-.01323	.02075	.77398	.13654	-.00943	.02273
3.000	.78849	-.00016	-.08946	-.13392	-.01429	.02397	.77653	.13676	-.00991	.02609
7.500	.79339	-.00070	-.04047	-.13235	-.01543	.02560	.78669	.13800	-.01075	.02789
15.000	.80559	-.00006	-.05355	-.12884	-.01539	.02686	.79729	.14052	-.01049	.02913
30.000	.82561	.00290	-.08094	-.12338	-.01307	.02677	.81257	.14622	-.00823	.02853
45.000	.83833	.00501	-.08943	-.11915	-.01212	.02591	.82473	.15051	-.00746	.02752
60.000	.85014	.00594	-.09857	-.11635	-.01096	.02516	.83619	.15347	-.00642	.02668
GRADIENT	.00175	-.00010	-.00499	.00004	-.00029	.00063	.00174	.00020	-.00018	.00067

CA20 747/1 01 S1 CARRIER DATA (MGN096) (25 NOV 75)

REFERENCE DATA

SREF = 5500.0000 SQ.FT. XMRP = 1339.9000 IN.XC
LREF = 327.7800 IN. YMRP = .0000 IN.YC
BREF = 2348.0400 IN. ZMRP = 190.8000 IN.ZC
SCALE = .0300

PARAMETRIC DATA

ELV-IB = .000 ELV-OB = 3.000
ELEVON = 5.000 MACH = .600
BETAO = -5.000 BETAC = -5.000
PHI = 7.500 DY = 10.000
DX = .000 ALPHAC = 4.000

RN/L = 3.28 GRADIENT INTERVAL = .00/ 12.00

ALPHAO = 10.000

DZ	CN	CA	CLM	CY	CBL	CYN	CL	CD	CSL	CLN
.000	.41277	.05032	.01668	.07585	.01815	-.01586	.40524	.09319	.01640	-.01767
3.000	.41980	.05005	.01685	.07783	.01829	-.01623	.41227	.09366	.01650	-.01805
7.500	.43001	.04991	.01289	.07969	.01817	-.01613	.42244	.09459	.01638	-.01794
15.000	.44938	.04886	-.00407	.08133	.01740	-.01606	.44180	.09567	.01563	-.01779
30.000	.47875	.04696	-.02636	.09006	.01763	-.01935	.47122	.09675	.01551	-.02109
45.000	.49907	.04501	-.04002	.09135	.01694	-.01939	.49064	.09682	.01482	-.02104
60.000	.51975	.04314	-.05310	.08732	.01567	-.01763	.51239	.09723	.01374	-.01917
GRADIENT	.00230	-.00005	-.00057	.00050	-.00000	-.00003	.00229	.00019	-.00000	-.00003

RN/L = 3.28 GRADIENT INTERVAL = .00/ 12.00

ALPHAO = 14.000

DZ	CN	CA	CLM	CY	CBL	CYN	CL	CD	CSL	CLN
.000	.32638	.05019	.08752	.05654	.02010	-.01122	.32930	.08508	.01882	-.01326
3.000	.33985	.05091	.10338	.05819	.02047	-.01060	.33267	.08616	.01925	-.01269
7.500	.35238	.05105	.10179	.06277	.02045	-.01132	.34509	.08760	.01915	-.01340
15.000	.38188	.05099	.06972	.06776	.01900	-.01206	.37446	.09062	.01763	-.01398
30.000	.42956	.04948	.01691	.07409	.01660	-.01175	.42203	.09411	.01529	-.01342
45.000	.46171	.04769	-.01321	.08655	.01720	-.01728	.45419	.09569	.01530	-.01698
60.000	.48462	.04556	-.03090	.09051	.01709	-.01908	.47719	.09606	.01500	-.02076
GRADIENT	.00218	.00011	.00172	.00084	.00004	-.00003	.00216	.00034	.00004	-.00003

CA20 747/1 01 S1 CARRIER DATA (MGN097) (25 NOV 75)

REFERENCE DATA

SREF = 5500.0000 SQ.FT. XMRP = 1339.9000 IN.XC
LREF = 327.7800 IN. YMRP = .0000 IN.YC
BREF = 2348.0400 IN. ZMRP = 190.8000 IN.ZC
SCALE = .0300

PARAMETRIC DATA

ELV-IB = .000 ELV-OB = 3.000
ELEVCN = 5.000 MACH = .600
PHI = 7.500 BETAO = -5.000
BETAC = -5.000 DY = 10.000
DX = .000 ALPHAC = 8.000

RN/L = 3.25 GRADIENT INTERVAL = .00/ 12.00

ALPHAO = 10.000

DZ	CN	CA	CLM	CY	CBL	CYN	CL	CD	CSL	CLN
.000	.80965	.00484	-.10280	.07038	.01634	-.01252	.79651	.14536	.01385	-.01555
3.000	.81389	.00393	-.10288	.07317	.01658	-.01335	.80085	.14620	.01409	-.01604
7.500	.81959	.00260	-.09991	.07580	.01685	-.01339	.80678	.14690	.01427	-.01611
15.000	.83257	.00108	-.10046	.08073	.01750	-.01439	.81974	.14564	.01473	-.01721
30.000	.85185	-.00114	-.10320	.08625	.01802	-.01555	.83911	.14680	.01498	-.01693
45.000	.86775	-.00287	-.10688	.08847	.01838	-.01673	.85507	.14765	.01519	-.01955
60.000	.88788	-.00470	-.11870	.08701	.01916	-.01632	.87521	.14955	.01604	-.01940
GRADIENT	.00133	-.00030	.00046	.00069	.00007	-.00006	.00137	-.00006	.00005	-.00007

RN/L = 3.26 GRADIENT INTERVAL = .00/ 12.00

ALPHAO = 14.000

DZ	CN	CA	CLM	CY	CBL	CYN	CL	CD	CSL	CLN
.000	.71120	.00557	-.00474	.05596	.01996	-.01119	.69943	.12899	.01761	-.01447
3.000	.72204	.00557	-.01665	.06046	.01992	-.01155	.71011	.13087	.01761	-.01483
7.500	.73737	.00465	-.02794	.06450	.01935	-.01159	.72532	.13282	.01705	-.01477
15.000	.76242	.00348	-.04944	.06785	.01810	-.01072	.75024	.13582	.01597	-.01370
30.000	.80169	.00086	-.07753	.07898	.01817	-.01302	.78936	.14006	.01553	-.01598
45.000	.82919	-.00133	-.08939	.08486	.01650	-.01545	.81682	.14268	.01554	-.01643
60.000	.85597	-.00318	-.10030	.08813	.01698	-.01660	.84352	.14551	.01591	-.01954
GRADIENT	.00348	-.00010	-.00305	.00112	-.00007	-.00005	.00345	.00050	-.00008	-.00004

CA20 747/1 01 S1 CARRIER DATA (MGN098) (25 NOV 75)

REFERENCE DATA

SREF = 5500.0000 SQ.FT. XMRP = 1339.9000 IN.XC
LREF = 327.7800 IN. YMRP = .0000 IN.YC
BREF = 2348.0400 IN. ZMRP = 190.8000 IN.ZC
SCALE = .0300

PARAMETRIC DATA

ELV-IB =	.000	ELV-OB =	3.000
ELEVON =	5.000	MACH =	.600
PHI =	7.500	BETAO =	-5.000
BETAC =	.000	DY =	10.000
DX =	.000	ALPHAC =	4.000

RN/L = 3.29 GRADIENT INTERVAL = .00/ 12.00

ALPHAO = 10.000

DZ	CN	CA	CLM	CY	CBL	CYN	CL	CD	CSL	CLN
.000	.39678	.05419	.09691	-.02871	.00225	.00335	.38894	.09537	.00259	.00309
3.000	.40656	.05403	.08551	-.02147	.00219	.00085	.39868	.09823	.00227	.00062
7.500	.42502	.05410	.05095	-.01912	.00124	.00197	.41704	.09823	.00144	.00182
15.000	.44862	.05345	.01393	-.02067	-.00049	.00530	.44057	.10005	.00007	.00532
30.000	.47970	.05197	-.02028	-.01328	-.00068	.00368	.47164	.10182	-.00029	.00373
45.000	.49884	.05080	-.03688	-.00818	-.00027	.00168	.49181	.10257	-.00010	.00170
60.000	.51975	.05018	-.04769	-.00084	.00095	-.00169	.51165	.10423	.00077	-.00178
GRADIENT	.00379	-.00001	-.00625	.00122	-.00014	-.00015	.00377	.00039	-.00016	-.00013

RN/L = 3.27 GRADIENT INTERVAL = .00/ 12.00

ALPHAO = 14.000

DZ	CN	CA	CLM	CY	CBL	CYN	CL	CD	CSL	CLN
.000	.30980	.05249	.20795	-.05059	.00291	.00776	.30262	.08458	.00370	.00741
3.000	.31926	.05253	.19605	-.04301	.00325	.00627	.31202	.08561	.00399	.00590
7.500	.33724	.05228	.16818	-.03531	.00292	.00559	.32993	.08725	.00349	.00525
15.000	.37453	.05311	.10416	-.03172	.00114	.00731	.36693	.09197	.00189	.00715
30.000	.42964	.05322	.02328	-.02963	-.00176	.01069	.42172	.09764	-.00063	.01082
45.000	.46128	.05255	-.00752	-.01598	-.00076	.00495	.45326	.10048	-.00024	.00500
60.000	.48353	.05137	-.02714	-.00916	-.00013	.00169	.47551	.10163	.00007	.00190
GRADIENT	.00368	-.00003	-.00537	.00201	-.00000	-.00028	.00367	.00036	-.00003	-.00028

CA20 747/1 01 S1 CARRIER DATA (MGN099) (25 NOV 75)

REFERENCE DATA

SREF =	6500.0000 SQ.FT.	XMRP =	1339.8000 IN.XC		
LREF =	327.7800 IN.	YMRP =	.0000 IN.YC		
BREF =	2348.0400 IN.	ZMRP =	190.8000 IN.ZC		
SCALE =	.0300				

PARAMETRIC DATA

ELV-IB =	.000	ELV-OB =	3.000
ELEVON =	5.000	MACH =	.600
BETAO =	-5.000	BETAC =	.000
PHI =	7.500	DY =	10.000
DX =	.000	ALPHAC =	8.000

RN/L = 3.25 GRADIENT INTERVAL = .00/ 12.00

ALPHAO = 10.000

DZ	CN	CA	CLM	CY	CBL	CYN	CL	CD	CSL	CLN
.000	.81008	.00891	-.05498	-.02240	-.00027	-.00144	.79623	.14944	-.00052	-.00137
3.000	.81572	.00819	-.06669	-.02372	-.00103	.00158	.80191	.14972	-.00074	.00173
7.500	.82215	.00718	-.07543	-.02402	-.00181	.00394	.80841	.14984	-.00110	.00419
15.000	.83574	.00617	-.08626	-.02189	-.00244	.00558	.82197	.15120	-.00143	.00592
30.000	.85465	.00485	-.08638	-.01165	-.00148	.00237	.84073	.15317	-.00105	.00259
45.000	.87011	.00442	-.08862	-.00954	-.00153	.00181	.85512	.15545	-.00119	.00205
60.000	.89375	.01158	-.09211	-.01121	-.00203	.00256	.88308	.16747	-.00155	.00237
GRADIENT	.00159	-.00023	-.00266	-.00020	-.00020	.00070	.00161	.00005	-.00008	.00073

RN/L = 3.27 GRADIENT INTERVAL = .00/ 12.00

ALPHAO = 14.000

DZ	CN	CA	CLM	CY	CBL	CYN	CL	CD	CSL	CLN
.000	.71772	.00813	.05210	-.03750	.00207	.00089	.70541	.13284	.00219	.00052
3.000	.72692	.00802	.02844	-.03582	.00110	.00237	.71418	.13407	.00158	.00264
7.500	.74526	.00769	-.00557	-.03523	.00003	.00630	.73260	.13698	.00112	.00630
15.000	.77038	.00690	-.03808	-.03237	-.00135	.00657	.75749	.14047	.00014	.00657
30.000	.81104	.00558	-.07112	-.02205	-.00167	.00707	.79775	.14634	-.00041	.00725
45.000	.83749	.00501	-.07578	-.01175	-.00078	.00277	.82389	.15037	-.00028	.00285
60.000	.85828	.01645	-.07690	-.00957	-.00055	.00212	.84412	.15539	-.00057	.00226
GRADIENT	.00371	-.00006	-.00770	.00028	-.00027	.00072	.00356	.00058	-.00014	.00076

ORIGINAL PAGE IS
OF POOR QUALITY

CA20 747/1 01 SI CARRIER DATA (MGN100) (25 NOV 75)

REFERENCE DATA

SREF =	5500.0000 SQ.FT.	XMRP =	1339.9000 IN.XC		
LREF =	327.7800 IN.	YMRP =	.0000 IN.YC		
BREF =	2348.0400 IN.	ZMRP =	190.8080 IN.ZC		
SCALE =	.0300				

PARAMETRIC DATA

ELV-IB =	.000	ELV-OB =	3.000
ELEVON =	5.000	MACH =	.600
BETAO =	-5.000	BETAC =	5.000
PHI =	7.500	DY =	10.000
DX =	.000	ALPHAC =	4.000

RN/L = 3.31 GRADIENT INTERVAL = .00/ 12.00

ALPHAO = 10.000

DZ	CN	CA	CLM	CY	CBL	CYN	CL	CD	CSL	CLN
.000	.41337	.04554	.06820	-.13930	-.01705	.02808	.40635	.08850	-.01402	.02971
3.000	.42285	.04743	.05232	-.13556	-.01769	.02847	.41557	.09137	-.01462	.03017
7.500	.43614	.04834	.02469	-.12599	-.01759	.02805	.42855	.09417	-.01477	.02775
15.000	.45678	.04871	-.00688	-.11791	-.01750	.02423	.44918	.09619	-.01487	.02593
30.000	.48435	.04683	-.03349	-.11114	-.01724	.02340	.47680	.09720	-.01470	.02507
45.000	.50339	.04533	-.05065	-.10966	-.01713	.02343	.49589	.09770	-.01459	.02509
60.000	.52473	.04436	-.07560	-.11451	-.01745	.02526	.51721	.09897	-.01471	.02695
GRADIENT	.00303	.00043	-.00583	.00180	-.00006	-.00029	.00297	.00075	-.00009	-.00028

RN/L = 3.28 GRADIENT INTERVAL = .00/ 12.00

ALPHAO = 14.000

DZ	CN	CA	CLM	CY	CBL	CYN	CL	CD	CSL	CLN
.000	.33334	.04624	.17255	-.15477	-.01582	.02962	.32668	.08983	-.01263	.03111
3.000	.34323	.04598	.14757	-.15083	-.01652	.03104	.33655	.08150	-.01318	.03260
7.500	.35949	.04625	.11392	-.14430	-.01749	.03186	.35269	.09359	-.01406	.03352
15.000	.39019	.04649	.06818	-.13328	-.01813	.02997	.38288	.09801	-.01469	.03170
30.000	.43665	.04876	.00739	-.11879	-.01754	.02607	.42916	.09414	-.01472	.02776
45.000	.46702	.04738	-.02330	-.11482	-.01743	.02542	.45951	.09594	-.01469	.02711
60.000	.48956	.04609	-.04204	-.11244	-.01742	.02467	.48106	.09690	-.01474	.02635
GRADIENT	.00350	.00001	-.00779	.00140	-.00022	.00029	.00348	.00037	-.00019	.00031

CA20 747/1 01 SI CARRIER DATA (MGN101) (25 NOV 75)

REFERENCE DATA

SREF = 5500.0000 SQ.FT. XMRP = 1339.9000 IN.XC
LREF = 327.7800 IN. YMRP = .0000 IN.YC
BREF = 2348.0400 IN. ZMRP = 190.8000 IN.ZC
SCALE = .0300

PARAMETRIC DATA

ELV-IB =	.000	ELV-03 =	3.000
ELEVON =	5.000	MACH =	.600
PHI =	7.500	EETAO =	-5.000
EETAC =	5.000	DY =	10.000
DX =	.000	ALPHAC =	8.000

RN/L = 3.25 GRADIENT INTERVAL = .00/ 12.00

ALPHAO = 10.000

DZ	CN	CA	CLM	CY	CBL	CYN	CL	CD	CSL	CLN
.000	.81795	.00564	-.09489	-.12922	-.01483	.02133	.80455	.14759	-.01070	.02354
3.000	.81832	.00540	-.10000	-.12331	-.01475	.02160	.80495	.14742	-.01078	.02384
7.500	.82176	.00480	-.10475	-.11892	-.01496	.02141	.80844	.14742	-.01102	.02389
15.000	.83128	.00417	-.11228	-.11258	-.01478	.02057	.81793	.14646	-.01095	.02292
30.000	.84934	.00265	-.11704	-.10908	-.01509	.02170	.83595	.15030	-.01109	.02399
45.000	.85612	.00193	-.11650	-.10591	-.01492	.02069	.85262	.15230	-.01110	.02295
60.000	.88716	.00150	-.12442	-.10090	-.01469	.01765	.87342	.15553	-.01134	.02023
GRADIENT	.00053	-.00011	-.00129	.00137	-.00004	.00001	.00054	-.00002	-.00004	.00001

RN/L = 3.27 GRADIENT INTERVAL = .00/ 12.00

ALPHAO = 14.000

DZ	CN	CA	CLM	CY	CBL	CYN	CL	CD	CSL	CLN
.000	.73830	-.00093	-.01489	-.15046	-.01647	.02815	.72725	.12723	-.01168	.02861
3.000	.74431	.00023	-.02748	-.14390	-.01716	.02642	.73296	.12547	-.01231	.02900
7.500	.75768	.00132	-.04992	-.13531	-.01779	.02630	.74594	.13287	-.01295	.02899
15.000	.77719	.00143	-.07446	-.12339	-.01760	.02390	.76514	.13637	-.01319	.02659
30.000	.80651	.00213	-.09382	-.11234	-.01592	.02170	.79389	.14215	-.01181	.02412
45.000	.83025	.00181	-.10107	-.10876	-.01504	.02154	.81732	.14598	-.01107	.02382
60.000	.85067	.00151	-.10981	-.10644	-.01483	.02083	.83749	.14920	-.01088	.02309
GRADIENT	.00261	.00030	-.00470	.00201	-.00017	.00002	.00252	.00075	-.00017	.00005

CA20 747/1 01 SI CARRIER DATA (MGN104) (25 NOV 75)

REFERENCE DATA

SREF = 5500.0000 SQ.FT. XMRP = 1339.9000 IN.XC
LREF = 327.7800 IN. YMRP = .0000 IN.YC
BREF = 2348.0400 IN. ZMRP = 190.8000 IN.ZC
SCALE = .0300

PARAMETRIC DATA

ELV-IB = .000 ELV-OB = 3.000
ELEVON = 5.000 MACH = .600
PHI = .000 BETAO = -5.000
BETAC = -5.000 DY = .000
DX = 10.000 ALPHAC = 4.000

RN/L = 3.30 GRADIENT INTERVAL = .00/ 12.00

ALPHAO = 10.000

DZ	CN	CA	CLM	CY	CBL	CYN	CL	CD	CSL	CLN
.000	.43911	.04572	.05549	.11078	.01363	-.01975	.43193	.09137	.01149	-.02107
3.000	.43774	.04611	.05821	.11166	.01498	-.02332	.43052	.09162	.01246	-.02476
7.500	.45002	.04657	.02805	.10626	.01506	-.02202	.44269	.09335	.01268	-.02347
15.000	.46475	.04649	.00041	.10423	.01541	-.02233	.45734	.09481	.01293	-.02382
30.000	.48756	.04485	-.02777	.10184	.01613	-.02282	.48020	.09557	.01358	-.02419
45.000	.50408	.04373	-.04420	.10159	.01691	-.02309	.49675	.09618	.01430	-.02472
60.000	.52211	.04244	-.06259	.10160	.01759	-.02379	.51482	.09678	.01500	-.02550
GRADIENT	.00155	.00011	-.00390	-.00065	.00018	-.00026	.00153	.00027	.00015	-.00027

RN/L = 3.28 GRADIENT INTERVAL = .00/ 12.00

ALPHAO = 14.000

DZ	CN	CA	CLM	CY	CBL	CYN	CL	CD	CSL	CLN
.000	.36442	.04371	.18874	.09999	.01092	-.01310	.35786	.08155	.00949	-.01417
3.000	.36862	.04381	.17448	.10880	.01333	-.02079	.36202	.08210	.01108	-.02207
7.500	.38189	.04511	.14217	.10785	.01476	-.02265	.37509	.08478	.01232	-.02407
15.000	.40755	.04671	.08567	.10268	.01534	-.02156	.40043	.08905	.01300	-.02305
30.000	.44475	.04696	.02135	.09533	.01490	-.01904	.43741	.09310	.01283	-.02049
45.000	.47083	.04546	-.01059	.10005	.01640	-.02244	.46350	.09442	.01397	-.02403
60.000	.48845	.04430	-.03062	.10014	.01692	-.02304	.48115	.09512	.01432	-.02467
GRADIENT	.00239	.00020	-.00629	.00095	.00050	-.00120	.00235	.00044	.00037	-.00125

CA20 747/1 01 SI CARRIER DATA (HGN105) (25 NOV 75)

REFERENCE DATA

SREF = 5500.0000 SQ.FT. XMRP = 1339.9000 IN.XC
LREF = 327.7800 IN. YMRP = .0000 IN.YC
BREF = 2348.0400 IN. ZMRP = 190.8000 IN.ZC
SCALE = .0300

PARAMETRIC DATA

ELV-IB =	.000	ELV-OB =	3.000
ELEVON =	5.000	MACH =	.600
PHI =	.000	BETAO =	-5.000
BETAC =	-5.000	DY =	.000
DX =	10.000	ALPHAC =	8.000

RN/L = 3.26 GRADIENT INTERVAL = .00/ 12.00

ALPHAO = 10.000

DZ	CN	CA	CLM	CY	CBL	CYN	CL	CD	CSL	CLN
.000	.83539	-.00120	-.09974	.10396	.01486	-.01734	.82290	.14389	.01163	-.01995
3.000	.83611	-.00155	-.10262	.10074	.01547	-.01798	.82357	.14366	.01211	-.02040
7.500	.84044	-.00160	-.10743	.09543	.01519	-.01636	.82795	.14436	.01212	-.01875
15.000	.84697	-.00239	-.10289	.09277	.01582	-.01673	.83452	.14472	.01248	-.01919
30.000	.86436	-.00421	-.10980	.09576	.01746	-.01928	.85195	.14595	.01365	-.02202
45.000	.87792	-.00474	-.10589	.09302	.01779	-.01827	.86541	.14778	.01435	-.02108
60.000	.89387	-.00579	-.10849	.09283	.01877	-.01870	.88129	.14952	.01554	-.02169
GRADIENT	.00070	-.00005	-.00103	-.00114	.00004	.00015	.00069	.00007	.00008	.00014

RN/L = 3.32 GRADIENT INTERVAL = .00/ 12.00

ALPHAO = 14.000

DZ	CN	CA	CLM	CY	CBL	CYN	CL	CD	CSL	CLN
.000	.76531	-.00[illegible]	01[illegible]68	.11438	.01437	-.02011	.75501	.13112	.01089	-.02230
3.000	.76877	-.00[illegible]	.00322	.11205	.01563	-.02221	.75735	.13205	.01153	-.02459
7.500	.78156	-.00124	-.02197	.10513	.01575	-.02052	.76990	.13460	.01195	-.02254
15.000	.79705	-.00162	-.04729	.09988	.01613	-.01927	.76523	.13591	.01254	-.02178
30.000	.82295	-.00322	-.07463	[illegible]9652	.01731	-.01915	.81101	.13974	.01372	-.02165
45.000	.84382	-.00406	-.08612	.09448	.01780	-.01886	.83170	.14253	.01425	-.02165
60.000	.86076	-.00473	-.09475	.09350	.01832	-.01836	.84651	.14481	.01480	-.02155
GRADIENT	.00210	.00010	-.00519	-.00128	.00017	-.00002	.00205	.00046	.00017	-.00005

CA20 747/1 01 S1 CARRIER DATA (MGN106) (25 NOV 75)

REFERENCE DATA

SREF = 5500.0000 SQ.FT. XMRP = 1339.9000 IN.XC
LREF = 327.7800 IN. YMRP = .0000 IN.YC
BREF = 2348.0400 IN. ZMRP = 190.8000 IN.ZC
SCALE = .0300

PARAMETRIC DATA

ELV-IB =	.000	ELV-OB =	3.000
ELEVON =	5.000	MACH =	.600
BETAO =	-5.000	BETAC =	-5.000
PHI =	.000	DY =	10.000
DX =	.000	ALPHAC =	4.000

RUN NO. 0/ 0 RN/L = 3.31 GRADIENT INTERVAL = .00/ 12.00

ALPHAO	DZ	CN	CA	CLM	CY	CBL	CYN	CL	CD	CSL	CLN
10.000	.000	.39858	.04998	.00659	.08354	.02197	-.01930	.39118	.09137	.01983	-.02149
10.000	3.000	.40435	.04966	.01280	.08457	.02183	-.01998	.39695	.09166	.01992	-.02215
10.000	7.500	.41614	.04931	.00609	.08539	.02095	-.01976	.40871	.09253	.01977	-.02184
10.000	15.000	.43659	.04849	-.00845	.08374	.01929	-.01801	.42913	.09386	.01730	-.01993
10.000	30.000	.46446	.04645	-.02844	.08615	.01798	-.01780	.45706	.09475	.01602	-.01958
10.000	45.000	.48369	.04431	-.04006	.08908	.01733	-.01856	.47641	.09463	.01528	-.02027
10.000	60.000	.50275	.04232	-.05268	.09189	.01665	-.01926	.49557	.09464	.01454	-.02089
	GRADIENT	.00236	-.00009	-.00018	.00024	-.00014	-.00005	.00236	.00016	-.00015	-.00004

CA20 747/1 01 S1 CARRIER DATA (MGN107) (25 NOV 75)

REFERENCE DATA

SREF = 5500.0000 SQ.FT. XMRP = 1339.9000 IN.XC
LREF = 327.7800 IN. YMRP = .0000 IN.YC
BREF = 2348.0400 IN. ZMRP = 190.8000 IN.ZC
SCALE = .0300

PARAMETRIC DATA

ELV-IB =	.000	ELV-OB =	3.000
ELEVON =	5.000	MACH =	.600
PHI =	.000	BETAO =	-5.000
BETAC =	-5.000	DY =	10.000
DX =	10.000	ALPHAC =	4.000

RN/L = 3.25 GRADIENT INTERVAL = .00/ 12.00

ALPHAO = 10.000

DZ	CN	CA	CLM	CY	CBL	CYN	CL	CD	CSL	CLN
.000	.81795	.00564	-.09489	-.12922	-.01463	.02133	.80455	.14759	-.01070	.02354
3.000	.81832	.00540	-.10000	-.12391	-.01475	.02160	.80495	.14742	-.01078	.02384
7.500	.82176	.00480	-.10475	-.11882	-.01496	.02141	.80844	.14742	-.01102	.02358
15.000	.83128	.00417	-.11228	-.11258	-.01478	.02057	.81793	.14646	-.01096	.02292
30.000	.84934	.00285	-.11704	-.10908	-.01509	.02170	.83595	.15030	-.01109	.02399
45.000	.86612	.00193	-.11850	-.10591	-.01492	.02068	.85262	.15230	-.01110	.02296
60.000	.89716	.00150	-.12442	-.10090	-.01468	.01795	.87342	.15553	-.01134	.02023
GRADIENT	.00053	-.00011	-.00129	.00137	-.00004	.00001	.00054	-.00002	-.00004	.00001

CA20 747/1 01 S1 CARRIER DATA (HGN107) (25 NOV 75)

REFERENCE DATA

SREF = 5500.0000 SQ.FT. XMRP = 1339.9000 IN.XC
LREF = 327.7800 IN. YMRP = .0000 IN.YC
BREF = 2348.0400 IN. ZMRP = 190.8000 IN.ZC
SCALE = .0300

PARAMETRIC DATA

ELV-1B =	.000	ELV-09 =	3.000
ELEVON =	5.000	MACH =	.600
PHI =	.000	BETAO =	-5.000
BETAC =	-5.000	DY =	10.000
DX =	10.000	ALPHAC =	4.000

RN/L = 3.27 GRADIENT INTERVAL = .00/ 12.00

ALPHAO = 14.000

DZ	CN	CA	CLM	CY	CBL	CYN	CL	CD	CSL	CLN
.000	.73830	-.00099	-.01489	-.15046	-.01647	.02615	.72725	.12723	-.01168	.02651
3.000	.74431	.00023	-.02748	-.14390	-.01716	.02642	.73286	.12947	-.01231	.02680
7.500	.75768	.00132	-.04992	-.13531	-.01778	.02630	.74594	.13287	-.01295	.02699
15.000	.77719	.00143	-.07446	-.12339	-.01760	.02390	.76514	.13537	-.01319	.02659
30.000	.80651	.00213	-.09382	-.11234	-.01582	.02170	.79389	.14215	-.01181	.02412
45.000	.83025	.00181	-.10107	-.10876	-.01504	.02154	.81732	.14595	-.01107	.02382
60.000	.85067	.00151	-.10981	-.10644	-.01483	.02083	.83749	.14920	-.01093	.02309
GRADIENT	.00261	.00030	-.00470	.00201	-.00017	.00002	.00252	.00075	-.00017	.00005

CA20 747/1 01 S1 CARRIER DATA (HGN108) (25 NOV 75)

REFERENCE DATA

SREF = 5500.0000 SQ.FT. XMRP = 1339.9000 IN.XC
LREF = 327.7800 IN. YMRP = .0000 IN.YC
BREF = 2348.0400 IN. ZMRP = 190.8000 IN.ZC
SCALE = .0300

PARAMETRIC DATA

ELV-1B =	.000	ELV-08 =	3.000
ELEVON =	5.000	MACH =	.600
PHI =	.000	BETAO =	-5.000
BETAC =	-5.000	DY =	10.000
DX =	10.000	ALPHAC =	8.000

RN/L = 3.24 GRADIENT INTERVAL = .00/ 12.00

ALPHAO = 10.000

DZ	CN	CA	CLM	CY	CBL	CYN	CL	CD	CSL	CLN
.000	.83521	.00058	-.11617	.08294	.01672	-.01539	.82243	.14560	.01380	-.01805
3.000	.83560	.00019	-.11184	.08357	.01739	-.01608	.82287	.14529	.01433	-.01685
7.500	.83983	-.00011	-.11068	.08353	.01747	-.01561	.82709	.14573	.01450	-.01640
15.000	.84787	-.00119	-.10729	.08451	.01767	-.01563	.83519	.14606	.01469	-.01646
30.000	.86279	-.00237	-.10895	.08776	.01821	-.01698	.85009	.14749	.01501	-.01978
45.000	.87680	-.00389	-.10542	.08860	.01835	-.01671	.86416	.14843	.01517	-.01954
60.000	.89152	-.00534	-.10471	.09051	.01874	-.01715	.87890	.14955	.01547	-.02014
GRADIENT	.00064	-.00009	.00069	.00007	.00009	-.00002	.00065	.00002	.00009	-.00003

ORIGINAL PAGE IS
OF POOR QUALITY

CA20 747/1 01 S1 CARRIER DATA (MGN108) (25 NOV 75)

REFERENCE DATA

SREF = 5500.0000 SQ.FT. XMRP = 1339.9000 IN.XC
LREF = 327.7800 IN. YMRP = .0000 IN.YC
BREF = 2348.0400 IN. ZMRP = 190.8000 IN.ZC
SCALE = .0300

PARAMETRIC DATA

ELV-IB =	.000	ELV-OB =	3.000
ELEVON =	5.000	MACH =	.600
PHI =	.000	BETAO =	-5.000
BETAC =	-5.000	DY =	10.000
DX =	10.000	ALPHAC =	8.000

RN/L = 3.26 GRADIENT INTERVAL = .00/ 12.00

ALPHAO = 14.000

DZ	CN	CA	CLM	CY	CBL	CYN	CL	CD	CSL	CLN
.000	.76380	.00115	-.01900	.08135	.02010	-.01750	.75200	.13376	.01676	-.02072
3.000	.76821	.00139	-.02475	.08188	.02013	-.01766	.75630	.13477	.01676	-.02089
7.500	.77916	.00079	-.04004	.08208	.01987	-.01712	.76719	.13608	.01659	-.02031
15.000	.79600	.00080	-.05868	.07705	.01849	-.01318	.78377	.13902	.01592	-.01619
30.000	.82240	-.00061	-.07354	.07959	.01805	-.01318	.81001	.14221	.01549	-.01612
45.000	.84346	-.00220	-.08629	.08505	.01846	-.01527	.83103	.14430	.01553	-.01824
60.000	.86008	-.00340	-.09178	.08800	.01850	-.01657	.84760	.14600	.01534	-.01953
GRADIENT	.00208	-.00005	-.00285	.00009	-.00003	.00006	.00206	.00031	-.00002	.00006

CA20 747/1 01 S1 CARRIER DATA (MGN109) (25 NOV 75)

REFERENCE DATA

SREF = 5500.0000 SQ.FT. XMRP = 1339.9000 IN.XC
LREF = 327.7800 IN. YMRP = .0000 IN.YC
BREF = 2348.0400 IN. ZMRP = 190.8000 IN.ZC
SCALE = .0300

PARAMETRIC DATA

ELV-IB =	.000	ELV-OB =	3.000
ELEVON =	5.000	MACH =	.600
PHI =	.000	BETAO =	-5.000
BETAC =	.000	DY =	.000
DX =	10.000	ALPHAC =	4.000

RN/L = 3.27 GRADIENT INTERVAL = .00/ 12.00

ALPHAO = 10.000

DZ	CN	CA	CLM	CY	CBL	CYN	CL	CD	CSL	CLN
.000	.43401	.05161	.05332	-.01493	-.00514	.00580	.42624	.09569	-.00450	.00631
3.000	.43726	.05238	.05159	-.01306	-.00464	.00555	.42939	.09780	-.00403	.00602
7.500	.44894	.05265	.03005	-.00855	-.00372	.00324	.44097	.09229	-.00336	.00351
15.000	.46555	.05229	.00124	-.00321	-.00249	.00015	.45753	.10065	-.00246	.00041
30.000	.49117	.05067	-.02553	-.00214	-.00152	-.00064	.48318	.10173	-.00159	-.00048
45.000	.50691	.04959	-.04692	-.00249	-.00080	-.00075	.49895	.10230	-.00089	-.00067
60.000	.52460	.04841	-.06639	-.00298	-.00011	-.00077	.51666	.10298	-.00019	-.00076
GRADIENT	.00204	.00013	-.00323	.00086	.00019	-.00036	.00201	.00035	.00015	-.00037

CA20 747/1 01 S1 CARRIER DATA (MGN109) (25 NOV 75)

REFERENCE DATA

SREF = 5500.0000 SQ.FT. XMRP = 1339.9000 IN.XC
LREF = 327.7800 IN. YMRP = .0000 IN.YC
BREF = 2348.0400 IN. ZMRP = 190.8000 IN.ZC
SCALE = .0300

PARAMETRIC DATA

ELV-IB = .000 ELV-OB = 3.000
ELEVON = 5.000 MACH = .600
PHI = .000 BETAO = -5.000
BETAC = .000 DY = .000
DX = 10.000 ALPHAC = 4.000

RN/L = 3.28 GRADIENT INTERVAL = .00/ 12.00

ALPHAO = 14.000

DZ	CN	CA	CLM	CY	CBL	CYN	CL	CD	CSL	CLN
.000	.36217	.04688	.18387	-.01959	-.00703	.00876	.35531	.08428	-.00608	.00544
3.000	.35634	.04783	.17599	-.01522	-.00600	.00707	.35933	.08585	-.00523	.00766
7.500	.38056	.04991	.14651	-.01028	-.00482	.00478	.37326	.08941	-.00430	.00586
15.000	.40914	.05171	.08685	-.00336	-.00302	.00077	.40150	.09420	-.00292	.00109
30.000	.44879	.05166	.02037	.00025	-.00136	-.00174	.44094	.09828	-.00153	-.00159
45.000	.47518	.05047	-.01033	-.00195	-.00090	-.00092	.46730	.09936	-.00099	-.00082
60.000	.49250	.04951	-.02896	-.00356	-.00055	-.00034	.48462	.10072	-.00059	-.00028
GRADIENT	.00251	.00043	-.00509	.00123	.00029	-.00053	.00245	.00069	.00023	-.00056

CA20 747/1 01 S1 CARRIER DATA (MGN110) (25 NOV 75)

REFERENCE DATA

SREF = 5500.0000 SQ.FT. XMRP = 1339.9000 IN.XC
LREF = 327.7800 IN. YMRP = .0000 IN.YC
BREF = 2348.0400 IN. ZMRP = 190.8000 IN.ZC
SCALE = .0300

PARAMETRIC DATA

ELV-IB = .000 ELV-OB = 3.000
ELEVON = 5.000 MACH = .600
PHI = .000 BETAO = -5.000
BETAC = .000 DY = .000
DX = 10.000 ALPHAC = 8.000

RN/L = 3.28 GRADIENT INTERVAL = .00/ 12.00

ALPHAO = 10.000

DZ	CN	CA	CLM	CY	CBL	CYN	CL	CD	CSL	CLN
.000	.83337	.00628	-.09542	-.00909	-.00343	.00152	.81962	.15090	-.00312	.00209
3.000	.83486	.00591	-.09275	-.00690	-.00297	.00097	.82115	.15079	-.00275	.00147
7.500	.84095	.00528	-.08493	-.00503	-.00232	.00039	.82725	.15123	-.00222	.00079
15.000	.85079	.00401	-.09556	-.00278	-.00161	-.00036	.83716	.15169	-.00165	-.00008
30.000	.86473	.00325	-.09209	-.00309	-.00116	-.00037	.85103	.15336	-.00121	-.00017
45.000	.87556	.00322	-.08833	-.00283	-.00049	-.00060	.86170	.15521	-.00058	-.00051
60.000	.88763	.00301	-.08455	-.00295	.00008	-.00069	.87362	.15710	-.00034	-.00069
GRADIENT	.00104	-.00013	.00002	.00053	.00015	-.00015	.00104	.00005	.00012	-.00017

CA20 747/1 01 S1 CARRIER DATA (HGN110) (25 NOV 75)

REFERENCE DATA

SREF = 5500.0000 SQ.FT. XMRP = 1339.9000 IN.XC
LREF = 327.7800 IN. YMRP = .0000 IN.YC
BREF = 2348.0400 IN. ZMRP = 190.8000 IN.ZC
SCALE = .0300

PARAMETRIC DATA

ELV-IB =	.000	ELV-OB =	3.000
ELEVON =	5.000	MACH =	.600
PHI =	.000	BETAO =	-5.000
BETAC =	.000	DY =	.000
DX =	10.000	ALPHAC =	8.000

RN/L = 3.29 GRADIENT INTERVAL = .00/ 12.00

ALPHAO = 14.000

DZ	CN	CA	CLM	CY	CBL	CYN	CL	CD	CSL	CLN
.000	.76664	.00574	.01097	-.01485	-.00514	.00489	.75400	.13878	-.00421	.00571
3.000	.77395	.00607	-.00039	-.01263	-.00443	.00451	.76114	.14038	-.00358	.00521
7.500	.78539	.00540	-.01885	-.00430	-.00330	.00062	.77252	.14170	-.00314	.00118
15.000	.80131	.00454	-.04306	-.00064	-.00218	-.00119	.78935	.14362	-.00236	-.00079
30.000	.82698	.00313	-.08508	-.00084	-.00152	-.00180	.81387	.14668	-.00181	-.00150
45.000	.84698	.00269	-.07291	-.00370	-.00123	-.00026	.83355	.14971	-.00126	-.00005
60.000	.86178	.00245	-.07868	-.00590	-.00101	.00043	.84826	.15206	-.00092	.00060
GRADIENT	.00250	-.00005	-.00399	.00144	.00025	-.00059	.00247	.00039	.00014	-.00063

CA20 747/1 01 S1 CARRIER DATA (HGN111) (25 NOV 75)

REFERENCE DATA

SREF = 5500.0000 SQ.FT. XMRP = 1339.9000 IN.XC
LREF = 327.7800 IN. YMRP = .0000 IN.YC
BREF = 2348.0400 IN. ZMRP = 190.8000 IN.ZC
SCALE = .0300

PARAMETRIC DATA

ELV-IB =	.000	ELV-OB =	3.000
ELEVON =	5.000	MACH =	.600
BETAO =	-5.000	BETAC =	.000
PHI =	.000	DY =	10.000
DX =	.000	ALPHAC =	4.000

RUN NO. 0/ 0 RN/L = 3.33 GRADIENT INTERVAL = .00/ 12.00

ALPHAO	DZ	CN	CA	CLM	CY	CBL	CYN	CL	CD	CSL	CLN
10.000	.000	.38369	.05415	.09060	-.01626	.00610	-.00500	.37593	.09395	.00555	-.00551
10.000	3.000	.39375	.05439	.07516	-.01619	.00502	-.00279	.39591	.09535	.00470	-.00330
10.000	7.500	.40923	.05426	.05128	-.01808	.00312	.00056	.40132	.09674	.00316	.00023
10.000	15.000	.43255	.05307	.01657	-.02034	.00129	.00419	.42464	.09799	.00172	.00403
10.000	30.000	.46503	.05132	-.01989	-.01594	.00013	.00431	.45712	.09865	.00058	.00427
10.000	45.000	.48518	.04943	-.03891	-.01187	-.00007	.00305	.47735	.09887	.00025	.00304
10.000	60.000	.50536	.04770	-.05913	-.00785	-.00028	.00126	.49760	.10026	-.00008	.00189
	GRADIENT	.00341	.00001	-.00525	-.00020	-.00040	.00074	.00339	.00037	-.00022	.00078

CA20 747/1 01 S1 CARRIER DATA (MGN112) (25 NOV 75)

REFERENCE DATA

SREF =	5500.0000 SQ.FT.	XMRP =	1339.9000 IN.XC		
LREF =	327.7800 IN.	YMRP =	.0000 IN.YC		
BREF =	2348.0400 IN.	ZMRP =	190.8000 IN.ZC		
SCALE =	.0300				

PARAMETRIC DATA

ELV-IB =	.000	ELV-OB =	3.000
ELEVON =	5.000	MACH =	.600
PHI =	.000	BETAO =	-5.000
BETAC =	.000	DY =	10.000
DX =	10.000	ALPHAC =	4.000

RN/L = 3.28 GRADIENT INTERVAL = .00/ 12.00

ALPHAO = 10.000

DZ	CN	CA	CLM	CY	CBL	CYN	CL	CD	CSL	CLN
.000	.41681	.05196	.06801	-.01221	.00399	-.00403	.40909	.09524	.00354	-.00442
3.000	.42154	.05210	.06354	-.01195	.00312	-.00271	.41379	.09563	.00282	-.00302
7.500	.43512	.05188	.03619	-.01426	.00184	.00046	.42732	.09708	.00187	.00026
15.000	.46201	.05093	.00744	-.01645	.00050	.00329	.44421	.09790	.00064	.00322
30.000	.47850	.04983	-.02672	-.01260	-.00004	.00290	.47069	.09939	.00026	.00269
45.000	.49396	.04828	-.04580	-.01096	-.00015	.00255	.48621	.09985	.00012	.00255
60.000	.51079	.04710	-.06791	-.00875	-.00020	.00204	.50306	.10024	.00002	.00205
GRADIENT	.00249	-.00001	-.00439	-.00029	-.00029	.00061	.00248	.00025	-.00022	.00053

RN/L = 3.24 GRADIENT INTERVAL = .00/ 12.00

ALPHAO = 14.000

DZ	CN	CA	CLM	CY	CBL	CYN	CL	CD	CSL	CLN
.000	.35961	.04758	.20060	-.01738	.00698	-.00662	.35267	.08483	.00625	-.00731
3.000	.35548	.04835	.18459	-.01733	.00630	-.00450	.35939	.08670	.00580	-.00514
7.500	.39116	.05033	.15110	-.02042	.00459	.00005	.37381	.08990	.00457	-.00043
15.000	.40879	.05141	.09054	-.02310	.00229	.00434	.40118	.09385	.00273	.00407
30.000	.44973	.05101	.02052	-.02469	-.00063	.00825	.44193	.09774	.00024	.00827
45.000	.47642	.05018	-.00889	-.01632	-.00009	.00487	.46857	.09970	.00042	.00465
60.000	.49539	.04921	-.03078	-.01232	-.00003	.00321	.48752	.10072	.00031	.00320
GRADIENT	.00291	.00038	-.00667	-.00043	-.00032	.00090	.00265	.00089	-.00023	.00093

ORIGINAL PAGE IS
OF POOR QUALITY

CA20 747/1 01 S1 CARRIER DATA (MGN113) (25 NOV 75)

REFERENCE DATA

SREF = 5500.0000 SQ.FT. XMRP = 1339.9000 IN.XC
LREF = 327.7800 IN. YMRP = .0000 IN.YC
BREF = 2348.0400 IN. ZMRP = 190.8000 IN.ZC
SCALE = .0300

PARAMETRIC DATA

ELV-IB =	.000	ELV-OB =	3.000
ELEVON =	5.000	MACH =	.600
BETAO =	-5.000	BETAC =	.000
PHI =	.000	DY =	10.000
DX =	.000	ALPHAC =	8.000

RUN NO. 01 0 RN/L = 3.26 GRADIENT INTERVAL = .00/ 12.00

ALPHAO	DZ	CN	CA	CLM	CY	CBL	CYN	CL	CD	CSL	CLN
14.000	.000	.70122	.00914	.05123	-.02825	.00687	-.00491	.69899	.13077	.00591	-.00503
14.000	3.000	.71069	.00892	.03411	-.02938	.00535	-.00066	.69835	.13220	.00515	-.00158
14.000	7.500	.72893	.00768	.00549	-.02884	.00346	.00251	.71652	.13414	.00384	.00187
14.000	15.000	.75396	.00636	-.02779	-.02975	.00112	.00655	.74140	.13718	.00225	.00635
14.000	30.000	.78997	.00460	-.06049	-.02430	-.00065	.00740	.77717	.14171	.00063	.00740
14.000	45.000	.81357	.00395	-.06782	-.01740	-.00072	.00477	.80053	.14517	.00012	.00482
14.000	60.000	.82943	.00383	-.07423	-.01382	-.00075	.00364	.81616	.14780	-.00011	.00372
	GRADIENT	.00372	-.00020	-.00612	-.00006	-.00045	.00097	.00370	.00045	-.00028	.00103

CA20 747/1 01 S1 CARRIER DATA (MGN114) (25 NOV 75)

REFERENCE DATA

SREF = 5500.0000 SQ.FT. XMRP = 1339.9000 IN.XC
LREF = 327.7800 IN. YMRP = .0000 IN.YC
BREF = 2348.0400 IN. ZMRP = 190.8000 IN.ZC
SCALE = .0300

PARAMETRIC DATA

ELV-IB =	.000	ELV-OB =	3.000
ELEVON =	5.000	MACH =	.600
PHI =	.000	BETAO =	-5.000
BETAC =	.000	DY =	10.000
DX =	10.000	ALPHAC =	8.000

RN/L = 3.24 GRADIENT INTERVAL = .00/ 12.00

ALPHAO = 10.000

DZ	CN	CA	CLM	CY	CBL	CYN	CL	CD	CSL	CLN
.000	.83520	.00647	-.07884	-.01613	.00040	-.00162	.82139	.15140	.00011	-.00167
3.000	.83655	.00596	-.08155	-.01671	.00005	.00019	.82280	.15113	.00009	.00017
7.500	.84150	.00522	-.08617	-.01730	-.00047	.00212	.82781	.15127	-.00010	.00217
15.000	.85130	.00412	-.09088	-.01725	-.00108	.00422	.83765	.15169	-.00033	.00434
30.000	.86432	.00348	-.09033	-.01054	-.00335	.00175	.85059	.15362	-.00004	.00178
45.000	.87654	.00338	-.08703	-.00917	-.00064	.00198	.86264	.15554	-.00028	.00206
60.000	.88927	.00317	-.08391	-.00533	-.00046	.00079	.87521	.15765	-.00032	.00085
GRADIENT	.00085	-.00017	-.00098	-.00015	-.00012	.00043	.00088	-.00001	-.00003	.00051

CA20 747/1 01 SI CARRIER DATA (MGN114) (25 NOV 75)

REFERENCE DATA

SREF = 5500.0000 SQ.FT.	XMRP = 1339.9000 IN.XC		
LREF = 327.7800 IN.	YMRP = .0000 IN.YC		
BREF = 2348.0400 IN.	ZMRP = 190.8000 IN.ZC		
SCALE = .0300			

PARAMETRIC DATA

ELV-IB =	.000	ELV-OB =	3.000
ELEVON =	5.000	MACH =	.600
PHI =	.000	BETAO =	-5.000
BETAC =	.000	DY =	10.000
DX =	10.000	ALPHAC =	8.000

RN/L = 3.22 GRADIENT INTERVAL = .00/ 12.00

ALPHAO = 14.000

DZ	CN	CA	CLM	CY	CBL	CYN	CL	CD	CSL	CLN
.000	.76564	.00853	.04593	-.02054	.00421	-.00452	.75304	.13540	.00336	-.00518
3.000	.77119	.00578	.03693	-.02387	.00262	-.00013	.75847	.13959	.00256	-.00059
7.500	.76401	.00467	.00614	-.02625	.00124	.00358	.77129	.14074	.00184	.00331
15.000	.80336	.00355	-.02435	-.02693	-.00029	.00686	.79054	.14300	.00091	.00680
30.000	.83256	.00244	-.05873	-.01964	-.00073	.00560	.81949	.14698	.00025	.00564
45.000	.85057	.00241	-.06448	-.01552	-.00082	.00426	.83723	.15007	-.00007	.00434
60.000	.86437	.00266	-.07274	-.01335	-.00094	.00358	.85077	.15272	-.00030	.00359
GRADIENT	.00248	-.00012	-.00543	-.00076	-.00039	.00106	.00247	.00031	-.00020	.00111

CA20 747/1 01 SI CARRIER DATA (MGN115) (25 NOV 75)

REFERENCE DATA

SREF = 5500.0000 SQ.FT.	XMRP = 1339.9000 IN.XC		
LREF = 327.7800 IN.	YMRP = .0000 IN.YC		
BREF = 2348.0400 IN.	ZMRP = 190.8000 IN.ZC		
SCALE = .0300			

PARAMETRIC DATA

ELV-IB =	.000	ELV-OB =	3.000
ELEVON =	5.000	MACH =	.600
PHI =	.000	BETAO =	-5.000
BETAC =	5.000	DY =	.000
DX =	10.000	ALPHAC =	4.000

RN/L = 3.26 GRADIENT INTERVAL = .00/ 12.00

ALPHAO = 10.000

DZ	CN	CA	CLM	CY	CBL	CYN	CL	CD	CSL	CLN
.000	.45644	.04469	-.01888	-.12697	-.02158	.02607	.44926	.09215	-.01874	.02819
3.000	.45753	.04537	-.01685	-.12294	-.02174	.02672	.45028	.09295	-.01693	.02885
7.500	.46431	.04624	-.02372	-.11648	-.02103	.02525	.45594	.09452	-.01828	.02731
15.000	.47635	.04673	-.03236	-.10650	-.01949	.02161	.46985	.09627	-.01713	.02353
30.000	.49542	.04573	-.04240	-.10030	-.01774	.01885	.48792	.09726	-.01558	.02060
45.000	.51087	.04440	-.05373	-.10448	-.01764	.02107	.50343	.09755	-.01535	.02280
60.000	.52713	.04306	-.06514	- 10777	-.01733	.02280	.51974	.09793	-.01465	.02448
GRADIENT	.00109	.00021	-.00072	.00140	.00008	-.00013	.00106	.00032	.00007	-.00013

CA20 747/1 01 SI CARRIER DATA (MGN115) (25 NOV 75)

REFERENCE DATA

SREF = 5500.0000 SQ.FT. XMRP = 1339.9000 IN.XC
LREF = 327.7800 IN. YMRP = .0000 IN.YC
BREF = 2348.0400 IN. ZMRP = 190.8000 IN.ZC
SCALE = .0300

PARAMETRIC DATA

ELV-IB =	.000	ELV-OB =	3.000
ELEVON =	5.000	MACH =	.600
PHI =	.000	BETAO =	-5.000
BETAC =	5.000	DY =	.000
DX =	10.000	ALPHAC =	4.000

RN/L = 3.27 GRADIENT INTERVAL = .00/ 12.00

ALPHAO = 14.000

DZ	CN	CA	CLM	CY	CBL	CYN	CL	CD	CSL	CLN
.000	.40250	.04113	.06355	-.13163	-.02249	.02700	.39600	.08298	-.01955	.02920
3.000	.40069	.04231	.06951	-.12880	-.02300	.02903	.39408	.08396	-.01984	.03128
7.500	.40565	.04449	.06525	-.12020	-.02233	.02722	.39877	.08665	-.01937	.02940
15.000	.42294	.04677	.03962	-.10696	-.02054	.02184	.41573	.09072	-.01815	.02387
30.000	.45504	.04721	.00230	-.09458	-.01751	.01601	.44761	.09452	-.01574	.01775
45.000	.47925	.04574	-.02152	-.10179	-.01747	.01961	.47184	.09559	-.01532	.02133
60.000	.49760	.04438	-.03894	-.10630	-.01754	.02188	.49024	.09515	-.01516	.02359
GRADIENT	.00047	.00045	.00013	.00156	.00003	-.00001	.00042	.00050	.00003	-.00001

CA20 747/1 01 SI CARRIER DATA (MGN116) (25 NOV 75)

REFERENCE DATA

SREF = 5500.0000 SQ.FT. XMRP = 1339.9000 IN.XC
LREF = 327.7800 IN. YMRP = .0000 IN.YC
BREF = 2348.0400 IN. ZMRP = 190.8000 IN.ZC
SCALE = .0300

PARAMETRIC DATA

ELV-IB =	.000	ELV-OB =	3.000
ELEVON =	5.000	MACH =	.600
PHI =	.000	BETAO =	-5.000
BETAC =	5.000	DY =	.000
DX =	10.000	ALPHAC =	8.000

RN/L = 3.26 GRADIENT INTERVAL = .00/ 12.00

ALPHAO = 10.000

DZ	CN	CA	CLM	CY	CBL	CYN	CL	CD	CSL	CLN
.000	.84078	.00251	-.14276	-.11979	-.01752	.02076	.82757	.14847	-.01355	.02349
3.000	.84089	.00231	-.13607	-.11983	-.01758	.02070	.82762	.14828	-.01372	.02343
7.500	.84311	.00232	-.13120	-.10845	-.01719	.01956	.82990	.14658	-.01353	.02225
15.000	.84916	.00233	-.12935	-.10169	-.01616	.01784	.83585	.14975	-.01282	.02037
30.000	.86227	.00129	-.12105	-.09930	-.01527	.01731	.84855	.15101	-.01204	.01970
45.000	.87596	.00040	-.12113	-.10421	-.01544	.01970	.86259	.15259	-.01178	.02208
60.000	.88935	-.00066	-.11811	-.10793	-.01540	.02165	.87644	.15387	-.01141	.02399
GRADIENT	.00033	-.00002	.00150	.00150	.00005	-.00017	.00033	.00003	.00002	-.00017

CA20 747/1 01 S1 CARRIER DATA (MGN116) (25 NOV 75)

REFERENCE DATA

SREF = 5500.0000 SQ.FT. XMRP = 1339.9000 IN.XC
LREF = 327.7800 IN. YMRP = .0000 IN.YC
BREF = 2348.0400 IN. ZMRP = 190.8000 IN.ZC
SCALE = .0300

PARAMETRIC DATA

ELV-IB =	.000	ELV-OB =	3.000
ELEVON =	5.000	MACH =	.600
PHI =	.000	BETAO =	-5.000
BETAC =	5.000	DY =	.000
DX =	10.000	ALPHAC =	8.000

RN/L = 3.26 GRADIENT INTERVAL = .09/ 12.00

ALPHAO = 14.000

DZ	CN	CA	CLM	CY	CBL	CYN	CL	CD	CSL	CLN
.000	.77858	.00117	-.06017	-.12930	-.01971	.02461	.76754	.13653	-.01514	.02765
3.000	.78137	.00145	-.06285	-.12256	-.01964	.02460	.76925	.13711	-.01507	.02763
7.500	.78713	.00220	-.06766	-.11172	-.01845	.02160	.77479	.13885	-.01443	.02648
15.000	.79895	.00270	-.07696	-.09906	-.01676	.01690	.78634	.14140	-.01357	.01955
30.000	.82289	.00219	-.08626	-.09272	-.01461	.01377	.81000	.14505	-.01200	.01610
45.000	.84242	.00089	-.09737	-.10135	-.01540	.01862	.82947	.14716	-.01194	.02101
60.000	.85008	-.00007	-.10701	-.10464	-.01536	.02017	.84703	.14928	-.01162	.02253
GRADIENT	.00103	.00014	-.00100	.00235	.00017	-.00042	.00089	.00031	.00010	-.00045

CA20 747/1 01 S1 CARRIER DATA (MGN117) (25 NOV 75)

REFERENCE DATA

SREF = 5500.0000 SQ.FT. XMRP = 1339.9000 IN.XC
LREF = 327.7800 IN. YMRP = .0000 IN.YC
BREF = 2348.0400 IN. ZMRP = 190.8000 IN.ZC
SCALE = .0300

PARAMETRIC DATA

ELV-IB =	.000	ELV-OB =	3.000
ELEVON =	5.000	MACH =	.600
PHI =	.000	BETAO =	-5.000
BETAC =	5.000	DY =	10.000
DX =	.000	ALPHAC =	4.000

RUN NO. 0/ 0 RN/L = 3.29 GRADIENT INTERVAL = .00/ 12.00

ALPHAO	DZ	CN	CA	CLM	CY	CBL	CYN	CL	CD	CSL	CLN
10.000	.000	.40316	.04787	.05960	-.12775	-.01250	.01894	.39595	.08975	-.01045	.02015
10.000	3.000	.40924	.04810	.05900	-.12642	-.01403	.02180	.40197	.09061	-.01167	.02315
10.000	7.500	.42265	.04758	.04036	-.12603	-.01553	.02484	.41537	.09150	-.01265	.02633
10.000	15.000	.44367	.04723	.00298	-.12036	-.01620	.02450	.43631	.09335	-.01355	.02606
10.000	30.000	.47111	.04525	-.03127	-.11705	-.01714	.02510	.46380	.09424	01442	.02675
10.000	45.000	.48932	.04356	-.04028	-.11428	-.01742	.02493	.48208	.09446	-.01471	.02661
10.000	60.000	.50749	.04165	-.05495	-.11165	-.01770	.02481	.50033	.09465	-.01501	.02653
	GRADIENT	.00263	-.00004	-.00392	.00022	-.00040	.00078	.00262	.00023	-.00031	.00031

ORIGINAL PAGE IS
OF POOR QUALITY

CA20 747/1 01 S1 CARRIER DATA (HGNI18) (25 NOV 75)

REFERENCE DATA

SREF = 5500.0000 SQ.FT. XMRP = 1339.9000 IN.XC
LREF = 327.7800 IN. YMRP = .0000 IN.YC
BREF = 2348.0400 IN. ZMRP = 190.8000 IN.ZC
SCALE = .0300

PARAMETRIC DATA

ELV-IB =	.000	ELV-OB =	3.000
ELEVON =	5.000	MACH =	.600
PHI =	.000	BETAO =	-5.000
BETAC =	5.000	DY =	10.000
DX =	10.000	ALPHAC =	4.000

RN/L = 3.29 GRADIENT INTERVAL = .00/ 12.00

ALPHAO = 10.000

DZ	CN	CA	CLM	CY	CBL	CYN	CL	CD	CSL	CLN
.000	.44784	.04730	.04446	-.12284	-.01296	.01846	.44044	.09395	-.01096	.01972
3.000	.45004	.04690	.03879	-.12454	-.01441	.02221	.44267	.09369	-.01201	.02360
7.500	.46035	.04600	.02033	-.12562	-.01568	.02561	.45302	.09387	-.01232	.02711
15.000	.47568	.04634	-.01335	-.11977	-.01622	.02447	.46823	.09581	-.01357	.02693
30.000	.50023	.04424	-.04319	-.11866	-.01732	.02614	.49287	.09629	-.01449	.02781
45.000	.51443	.04333	-.05440	-.11382	-.01726	.02451	.50708	.09565	-.01469	.02618
60.000	.53013	.04217	-.06709	-.10985	-.01740	.02353	.52282	.09735	-.01485	.02522
GRADIENT	.00172	-.00018	-.00329	-.00036	-.00036	.00094	.00173	.00001	-.00026	.00097

RN/L = 3.25 GRADIENT INTERVAL = .00/ 12.00

ALPHAO = 14.000

DZ	CN	CA	CLM	CY	CBL	CYN	CL	CD	CSL	CLN
.000	.38625	.03798	.17753	-.12769	-.01056	.01506	.38017	.07815	-.00892	.01609
3.000	.38449	.04068	.17457	-.12715	-.01188	.01854	.37814	.08065	-.00987	.01978
7.500	.39234	.04371	.14935	-.12983	-.01352	.02462	.39562	.08448	-.01097	.02591
15.000	.41870	.04555	.08313	-.12811	-.01504	.02705	.41165	.08906	-.01214	.02647
30.000	.45687	.04539	.00945	-.12223	-.01646	.02713	.44963	.09290	-.01353	.02870
45.000	.48223	.04444	-.02182	-.11870	-.01700	.02667	.47495	.09461	-.01412	.02830
60.000	.49984	.04378	-.04042	-.11483	-.01704	.02541	.49253	.09578	-.01429	.02705
GRADIENT	.00089	.00076	-.00390	-.00031	-.00041	.00128	.00080	.00064	-.00027	.00131

CA20 747/1 01 S1 CARRIER DATA (MGN119) (25 NOV 75)

REFERENCE DATA

SREF = 5500.0000 SQ.FT. XMRP = 1339.9000 IN.XC
LREF = 327.7800 IN. YMRP = .0000 IN.YC
BREF = 2348.0400 IN. ZMRP = 190.8000 IN.ZC
SCALE = .0300

PARAMETRIC DATA

ELV-IB =	.000	ELV-OB =	3.000
ELEVON =	5.000	MACH =	.600
PHI =	.000	BETAO =	-5.000
BETAC =	5.000	DY =	10.000
DX =	10.000	ALPHAC =	8.000

PN/L = 3.23 GRADIENT INTERVAL = .00/ 12.00

ALPHAO = 10.000

DZ	CN	CA	CLM	CY	CBL	CYN	CL	CD	CSL	CLN
.000	.83858	.00424	-.11132	-.12806	-.01149	.01720	.82510	.14979	-.00832	.01894
3.000	.84036	.00343	-.11324	-.12869	-.01248	.01982	.82700	.14931	-.00865	.02169
7.500	.83987	.00280	-.10794	-.11747	-.01339	.02080	.82653	.14850	-.00957	.02281
15.000	.84354	.00249	-.11654	-.11482	-.01381	.02161	.83029	.14893	-.00965	.02369
30.000	.88065	.00085	-.12181	-.11316	-.01509	.02318	.84763	.15032	-.01064	.02545
45.000	.87405	.00090	-.12187	-.10846	-.01475	.02127	.86061	.15886	-.01083	.02351
60.000	.88980	.00011	-.12254	-.10497	-.01511	.02074	.87627	.15462	-.01128	.02305
GRADIENT	.00015	-.00019	.00051	.00037	-.00025	.00048	.00018	-.00016	-.00017	.00050

RN/L = 3.22 GRADIENT INTERVAL = .00/ 12.00

ALPHAO = 14.000

DZ	CN	CA	CLM	CY	CBL	CYN	CL	CD	CSL	CLN
.000	.77682	.00138	.00024	-.12676	-.01060	.01574	.76478	.13625	-.00771	.01734
3.000	.78057	.00106	-.01203	-.12920	-.01221	.02051	.76853	.13659	-.00846	.02232
7.500	.78005	.00100	-.03415	-.12885	-.01318	.02232	.77699	.13800	-.00869	.02575
15.000	.80056	.00081	-.05724	-.12268	-.01378	.02376	.78225	.13981	-.00944	.02579
30.000	.82518	.00009	-.08819	-.11745	-.01475	.02423	.81282	.14339	-.01032	.02642
45.000	.84443	.00002	-.09905	-.11321	-.01492	.02329	.83160	.14665	-.01065	.02552
60.000	.85978	-.00020	-.10744	-.11021	-.01501	.02241	.84675	.14911	-.01069	.02468
GRADIENT	.00165	-.00005	-.00461	-.00025	-.00033	.00105	.00163	.00024	-.00015	.00109

CA20 747/1 01 S1 CARRIER DATA (MGN120) (25 NOV 75)

REFERENCE DATA

SREF = 5500.0000 SQ.FT.	XMRP = 1339.9000 IN.XC		
LREF = 327.7800 IN.	YMRP = .0000 IN.YC		
BREF = 2348.0400 IN.	ZMRP = 190.8000 IN.ZC		
SCALE = .0300			

PARAMETRIC DATA

ELV-IB =	.000	ELV-OB =	.000
ELEVON =	5.000	MACH =	.600
BETAO =	-5.000	PHI =	.000
DX =	.000	DY =	10.000
BETAC =	-5.000	ALPHAC =	4.000

RN/L = 3.26 GRADIENT INTERVAL = .00/ 12.00

ALPHAO = 10.000

DZ	CN	CA	CLM	CY	CBL	CYN	CL	CD	CSL	CLN
.000	.40892	.04967	.04523	.08320	.02080	-.01942	.40149	.09214	.01865	-.02149
3.000	.41418	.04945	.04778	.08396	.02058	-.01981	.40675	.09247	.01839	-.02185
7.500	.42664	.04897	.05094	.08393	.01971	-.01904	.41918	.09330	.01762	-.02089
15.000	.44477	.04856	.02671	.08243	.01831	-.01739	.43726	.09478	.01640	-.01920
30.000	.47045	.04645	.01316	.08612	.01739	-.01794	.46302	.09537	.01542	-.01985
45.000	.48998	.04474	.00125	.08902	.01669	-.01853	.48163	.09551	.01465	-.02027
60.000	.50784	.04336	-.01237	.09192	.01560	-.01920	.50052	.09621	.01351	-.02073
GRADIENT	.00239	-.00009	-.00065	.00009	-.00015	.00006	.00239	.00016	-.00014	.00008

RN/L = 3.24 GRADIENT INTERVAL = .00/ 12.00

ALPHAO = 14.000

DZ	CN	CA	CLM	CY	CBL	CYN	CL	CD	CSL	CLN
.000	.33689	.04794	.12448	.07095	.02525	-.01864	.33003	.08289	.02316	-.02118
3.000	.34464	.04880	.11983	.07479	.02485	-.01957	.33765	.08455	.02265	-.02205
7.500	.35775	.04975	.11759	.07521	.02390	-.01852	.35059	.08587	.02173	-.02091
15.000	.38603	.05010	.08697	.07373	.02147	-.01621	.37669	.09018	.01965	-.01837
30.000	.42902	.04905	.04751	.06931	.01698	-.01000	.42155	.09363	.01574	-.01171
45.000	.45636	.04713	.02568	.07908	.01657	-.01429	.44693	.09457	.01469	-.01595
60.000	.47709	.04526	.00932	.08759	.01662	-.01801	.46974	.09469	.01465	-.01955
GRADIENT	.00279	.00024	-.00089	.00053	-.00020	.00003	.00275	.00053	-.00019	.00005

CA20 747/1 01 S1 CARRIER DATA (HSN121) (25 NOV 75)

REFERENCE DATA

SREF =	5500.0000 SQ.FT.	XMRP =	1339.9000	IN.XC	
LREF =	327.7800 IN.	YMRP =	.0000	IN.YC	
BREF =	2348.0400 IN.	ZMRP =	190.8000	IN.ZC	
SCALE =	.0300				

PARAMETRIC DATA

ELV-IB =	.000	ELV-OB =	.000
ELEVON =	5.000	MACH =	.800
EETAO =	-5.000	PHI =	.000
DX =	.000	DY =	10.000
EETAC =	-5.000	ALPHAC =	8.000

RN/L = 3.25 GRADIENT INTERVAL = .00/ 12.00

ALPHAO = 10.000

DZ	CN	CA	CLM	CY	CBL	CYN	CL	CD	CSL	CLN
.000	.80458	.00460	-.05950	.07480	.01749	-.01520	.78164	.14426	.01459	-.01601
3.000	.80955	.00343	-.06388	.07597	.01782	-.01510	.78567	.14378	.01493	-.01795
7.500	.81555	.00243	-.06725	.07643	.01775	-.01417	.80224	.14403	.01502	-.01704
15.000	.82565	.00149	-.05592	.07259	.01767	-.01418	.81374	.14459	.01494	-.01703
30.000	.84485	-.00057	-.05395	.06435	.01825	-.01595	.82211	.14514	.01520	-.01833
45.000	.85918	-.00179	-.06431	.06551	.01820	-.01637	.84644	.14744	.01503	-.01823
60.000	.87393	-.00284	-.06204	.06539	.01813	-.01693	.85107	.14834	.01454	-.01972
GRADIENT	.00147	-.00008	.00022	.00021	.00003	.00014	.00160	-.00002	.00005	.00013

RN/L = 3.24 GRADIENT INTERVAL = .00/ 12.00

ALPHAO = 14.000

DZ	CN	CA	CLM	CY	CBL	CYN	CL	CD	CSL	CLN
.000	.71621	.00829	.00936	.05643	.02282	-.01649	.70521	.13091	.01961	-.02020
3.000	.72619	.00553	.00887	.05925	.02233	-.01600	.71418	.13165	.01921	-.01954
7.500	.74269	.00458	-.00729	.07021	.02114	-.01512	.73051	.13347	.01819	-.01857
15.000	.76593	.00325	-.02717	.05446	.01902	-.00867	.75440	.12543	.01705	-.01682
30.000	.79322	.00128	-.03740	.07079	.01753	-.00991	.78744	.14014	.01554	-.01820
45.000	.82601	-.00059	-.04883	.08002	.01798	-.01371	.81355	.14226	.01533	-.01882
60.000	.84605	-.00200	-.05370	.08498	.01820	-.01571	.83257	.14477	.01520	-.01833
GRADIENT	.00320	-.00023	-.00241	.00050	-.00023	.00018	.00358	.00035	-.00019	.00022

CA20 747/1 01 S1 CARRIER DATA (HGN122) (25 NOV 75)

REFERENCE DATA

SREF = 5500.0000 SQ.FT. XMRP = 1339.9000 IN.XC
LREF = 327.7800 IN. YMRP = .0000 IN.YC
BREF = 2348.0400 IN. ZMRP = 190.8000 IN.ZC
SCALE = .0300

PARAMETRIC DATA

ELV-IB = .000 ELV-OB = .000
ELEVON = 5.000 MACH = .600
BETAO = -5.000 PHI = .000
DX = .000 DY = 10.000
BETAC = .000 ALPHAC = 4.000

RN/L = 3.33 GRADIENT INTERVAL = .00/ 12.00

ALPHAO = 10.000

DZ	CN	CA	CLM	CY	CBL	CYN	CL	CD	CSL	CLN
.000	.40090	.05400	.10848	-.01601	.00449	-.00417	.39306	.09561	.00403	-.00462
3.000	.41024	.05430	.09457	-.01674	.00329	-.00174	.40232	.09688	.00309	-.00207
7.500	.42477	.05392	.07645	-.01882	.00166	.00149	.41691	.09302	.00181	.00131
15.000	.44555	.05267	.04654	-.02231	-.00001	.00529	.43760	.09399	.00054	.00527
30.000	.47165	.05130	.02025	-.01640	-.00057	.00420	.46370	.10032	-.00013	.00423
45.000	.49184	.04971	.00342	-.01306	-.00092	.00332	.48395	.10085	-.00057	.00340
60.000	.51311	.04789	-.01452	-.00909	-.00114	.00204	.50529	.10125	-.00092	.00215
GRADIENT	.00319	-.00002	-.00425	-.00038	-.00039	.00075	.00317	.00032	-.00030	.00079

RN/L = 3.27 GRADIENT INTERVAL = .00/ 12.00

ALPHAO = 14.000

DZ	CN	CA	CLM	CY	CBL	CYN	CL	CD	CSL	CLN
.000	.30977	.05112	.25009	-.02775	.00898	-.00452	.30273	.08322	.00846	-.00544
3.000	.32640	.05165	.21145	-.02497	.00772	-.00322	.31921	.08549	.00734	-.00401
7.500	.34702	.05214	.17887	-.02654	.00589	.00097	.33957	.08813	.00595	.00035
15.000	.38295	.05255	.12091	-.02549	.00324	.00354	.37536	.09229	.00361	.00328
30.000	.42954	.05188	.05702	-.03028	-.00085	.01044	.42177	.09650	.00024	.01047
45.000	.45924	.05086	.03004	-.01829	-.00041	.00546	.45141	.09658	.00016	.00547
60.000	.48011	.04959	.01309	-.01392	-.00064	.00386	.47230	.09551	-.00023	.00391
GRADIENT	.00494	.00013	-.00932	.00012	-.00041	.00075	.00490	.00065	-.00033	.00079

CA20 747/1 01 S1 CARRIER DATA (MGN123) (25 NOV 75)

REFERENCE DATA

SREF = 5500.0000 SQ.FT. XMRP = 1339.9000 IN.XC
LREF = 327.7800 IN. YMRP = .0000 IN.YC
BREF = 2348.0400 IN. ZMRP = 190.8000 IN.ZC
SCALE = .0300

PARAMETRIC DATA

ELV-IB =	.000	ELV-OB =	.000
ELEVON =	5.000	MACH =	.600
BETAO =	-5.000	PHI =	.000
DX =	.000	DY =	10.000
BETAC =	.000	ALPHAC =	8.000

RN/L = 3.28 GRADIENT INTERVAL = .00/ 12.00

ALPHAO = 10.000

DZ	CN	CA	CLM	CY	CBL	CYN	CL	CD	CSL	CLN
.000	.80417	.00905	-.02502	-.02127	-.00119	-.00158	.79038	.14855	-.00145	-.00135
3.000	.80803	.00820	-.02829	-.02215	-.00178	.00068	.79433	.14839	-.00163	.00098
7.500	.81635	.00713	-.03730	-.02345	-.00280	.00348	.80271	.14878	-.00216	.00390
15.000	.82505	.00599	-.04259	-.02365	-.00379	.00574	.81147	.14917	-.00273	.00631
30.000	.84407	.00507	-.04368	-.01415	-.00312	.00273	.83037	.15157	-.00260	.00323
45.000	.85750	.00498	-.04388	-.01305	-.00318	.00280	.84361	.15381	-.00265	.00331
60.000	.87055	.00489	-.04418	-.01260	-.00327	.00309	.85648	.15599	-.00268	.00351
GRADIENT	.00164	-.00025	-.00167	-.00029	-.00022	.00067	.00165	.00004	-.00010	.00070

RN/L = 3.26 GRADIENT INTERVAL = .00/ 12.00

ALPHAO = 14.000

DZ	CN	CA	CLM	CY	CBL	CYN	CL	CD	CSL	CLN
.000	.72295	.00847	.06248	-.03005	.00445	-.00303	.71050	.13388	.00386	-.00376
3.000	.73126	.00809	.04653	-.03078	.00305	.00048	.71874	.13494	.00309	-.00005
7.500	.74781	.00697	.02284	-.02963	.00152	.00300	.73524	.13672	.00202	.00269
15.000	.77041	.00529	-.00554	-.03215	-.00072	.00759	.75779	.13959	.00069	.00757
30.000	.80432	.00428	-.02922	-.02573	-.00244	.00775	.79136	.14388	-.00105	.00805
45.000	.82700	.00388	-.03504	-.01778	-.00234	.00459	.81377	.14743	-.00151	.00492
60.000	.84416	.00437	-.03953	-.01514	-.00274	.00378	.83059	.15089	-.00204	.00420
GRADIENT	.00334	-.00020	-.00528	.00007	-.00039	.00078	.00333	.00038	-.00024	.00084

CA20 747/1 01 S1 CARRIER DATA (HGN124) (25 NOV 75)

REFERENCE DATA

SREF = 5500.0000 SQ.FT. XMRP = 1339.9000 IN.XC
LREF = 327.7800 IN. YMRP = .0000 IN.YC
BREF = 2348.0400 IN. ZMRP = 190.8000 IN.ZC
SCALE = .0300

PARAMETRIC DATA

ELV-IB = .000 ELV-OB = .000
ELEVON = 5.000 MACH = .600
BETAO = -5.000 PHI = .000
DX = .000 DY = 10.000
BETAC = 5.000 ALPHAC = 4.000

RN/L = 3.25 GRADIENT INTERVAL = .00/ 12.00

ALPHAO = 10.000

DZ	CN	CA	CLM	CY	CBL	CYN	CL	CD	CSL	CLN
.000	.41821	.04754	.09127	-.12674	-.01415	.02073	.41095	.09100	-.01190	.02209
3.000	.42327	.04780	.08258	-.12609	-.01528	.02297	.41596	.09178	-.01280	.02444
7.500	.43496	.04746	.06374	-.12469	-.01633	.02480	.42763	.09266	-.01354	.02637
15.000	.45517	.04705	.02845	-.11940	-.01669	.02433	.44776	.09437	-.01405	.02594
30.000	.47916	.04515	.00258	-.11651	-.01742	.02500	.47182	.09499	-.01471	.02669
45.000	.49580	.04352	-.01019	-.11399	-.01769	.02461	.48853	.09511	-.01502	.02633
60.000	.51270	.04174	-.02535	-.11145	-.01807	.02421	.50553	.09511	-.01544	.02596
GRADIENT	.00226	-.00002	-.00371	.00028	-.00029	.00053	.00225	.00022	-.00023	.00056

RN/L = 3.23 GRADIENT INTERVAL = .00/ 12.00

ALPHAO = 14.000

DZ	CN	CA	CLM	CY	CBL	CYN	CL	CD	CSL	CLN
.000	.33375	.04473	.21253	-.13519	-.00994	.01787	.32724	.07937	-.00801	.01881
3.000	.34457	.04479	.18632	-.13563	-.01197	.02249	.33800	.08056	-.00955	.02362
7.500	.36055	.04592	.15740	-.13486	-.01398	.02655	.35379	.08326	-.01112	.02787
15.000	.38836	.04783	.11488	-.12804	-.01515	.02632	.38123	.08816	-.01231	.02776
30.000	.43360	.04713	.04690	-.12178	-.01657	.02654	.42630	.09219	-.01381	.02814
45.000	.46247	.04535	.01646	-.11976	-.01758	.02700	.45520	.09344	-.01467	.02869
60.000	.48281	.04407	-.00072	-.11593	-.01768	.02574	.47476	.09421	-.01489	.02744
GRADIENT	.00357	.00015	-.00728	.00005	-.00053	.00114	.00354	.00052	-.00041	.00119

ORIGINAL PAGE IS
OF POOR QUALITY

CA20 747/1 01 SI CARRIER DATA (HGN125) (25 NOV 75)

REFERENCE DATA

SREF = 5500.0000 SQ.FT. XMRP = 1339.9000 IN.XC
LREF = 327.7800 IN. YMRP = .0000 IN.YC
BREF = 2398.0400 IN. ZMRP = 190.8000 IN.ZC
SCALE = .0300

PARAMETRIC DATA

ELV-IB = .000 ELV-OB = .000
ELEVON = 5.000 MACH = .600
BETAO = -5.000 PHI = .000
DX = .000 DY = 10.000
BETAC = 5.000 ALPHAC = 8.000

RN/L = 3.23 GRADIENT INTERVAL = .00/ 12.00

ALPHAO = 10.000

DZ	CN	CA	CLM	CY	CBL	CYN	CL	CD	CSL	CLN
.000	.81427	.00580	-.06200	-.12437	-.01301	.01851	.80089	.14711	-.00960	.02049
3.000	.81601	.00521	-.06013	-.12279	-.01379	.02027	.80271	.14693	-.01006	.02235
7.500	.82022	.00444	-.06415	-.12029	-.01444	.02127	.80698	.14690	-.01053	.02345
15.000	.82859	.00356	-.07337	-.11745	-.01489	.02218	.81538	.14739	-.01081	.02442
30.000	.84760	.00173	-.08013	-.11417	-.01572	.02280	.83442	.14889	-.01152	.02519
45.000	.86069	.00131	-.07911	-.11081	-.01573	.02213	.84739	.15075	-.01165	.02453
60.000	.87363	.00099	-.07754	-.10735	-.01568	.02136	.86018	.15269	-.01174	.02376
GRADIENT	.00080	-.00018	-.00033	.00054	-.00019	.00035	.00082	-.00004	-.00012	.00038

RN/L = 3.23 GRADIENT INTERVAL = .00/ 12.00

ALPHAO = 14.000

DZ	CN	CA	CLM	CY	CBL	CYN	CL	CD	CSL	CLN
.000	.74011	.00235	.02055	-.13351	-.01189	.01655	.72846	.13084	-.00882	.01836
3.000	.74675	.00165	.01555	-.13374	-.01401	.02103	.73508	.13150	-.01015	.02315
7.500	.75936	.00222	-.00803	-.13103	-.01499	.02335	.74744	.13404	-.01070	.02561
15.000	.77743	.00190	-.03340	-.12423	-.01563	.02349	.76529	.13687	-.01131	.02585
30.000	.80261	.00236	-.05389	-.11854	-.01527	.02420	.79001	.14169	-.01084	.02648
45.000	.82617	.00170	-.06455	-.11487	-.01546	.02370	.81332	.14514	-.01111	.02602
60.000	.84378	.00169	-.07095	-.11184	-.01545	.02284	.83067	.14819	-.01125	.02517
GRADIENT	.00259	-.00001	-.00392	.00035	-.00040	.00088	.00255	.00044	-.00024	.00093

CA20 747/1 02 SI CARRIER DATA (MGN126) (25 NOV 75)

REFERENCE DATA

SREF = 5500.0000 SQ.FT. XMRP = 1339.9000 IN.XC
LREF = 327.7800 IN. YMRP = .0000 IN.YC
BREF = 2348.0400 IN. ZMRP = 190.8000 IN.ZC
SCALE = .0300

PARAMETRIC DATA

ALPHAC = 4.000 BETAC = -5.000
ELV-IB = .000 ELV-OB = 3.000
ELEVON = 5.000 MACH = .600
BETAO = .000 PHI = .000
DY = .000 DX = .000

RUN NO. 0/ 0 RN/L = 3.28 GRADIENT INTERVAL = .00/ 12.00

ALPHAO	DZ	CN	CA	CLM	CY	CBL	CYN	CL	CD	CSL	CLN
10.000	.000	.38603	.04713	.05444	.10069	.01796	-.01703	.37899	.08723	.01608	-.01882
10.000	3.000	.39272	.04740	.04827	.09970	.01865	-.01978	.38562	.08819	.01648	-.02162
10.000	7.500	.40703	.04824	.02577	.09806	.01887	-.02077	.39976	.09052	.01660	-.02263
10.000	15.000	.42908	.04786	-.00098	.09485	.01862	-.02070	.42172	.09245	.01635	-.02254
10.000	30.000	.45851	.04687	-.02571	.08819	.01714	-.01787	.45110	.09454	.01518	-.01956
10.000	45.000	.47776	.04503	-.03731	.08960	.01687	-.01869	.47044	.09473	.01482	-.02035
10.000	60.000	.49380	.04324	-.04816	.09280	.01690	-.02048	.48657	.09462	.01466	-.02214
	GRADIENT	.00283	.00015	-.00391	-.00035	.00012	-.00048	.00280	.00045	.00007	-.00049

CA20 747/1 02 SI CARRIER DATA (MGN127) (25 NOV 75)

REFERENCE DATA

SREF = 5500.0000 SQ.FT. XMRP = 1339.9000 IN.XC
LREF = 327.7800 IN. YMRP = .0000 IN.YC
BREF = 2348.0400 IN. ZMRP = 190.8000 IN.ZC
SCALE = .0300

PARAMETRIC DATA

ALPHAC = 4.000 BETAC = -5.000
ELV-IB = .000 ELV-OB = 3.000
ELEVON = 5.000 MACH = .600
BETAO = .000 PHI = .000
DY = .000 DX = 10.000

RUN NO. 0/ 0 RN/L = 3.34 GRADIENT INTERVAL = .00/ 12.00

ALPHAO	DZ	CN	CA	CLM	CY	CBL	CYN	CL	CD	CSL	CLN
10.000	.000	.40802	.04483	.05026	.10080	.01807	-.01780	.40110	.08724	.01611	-.01959
10.000	3.000	.41254	.04525	.04322	.10165	.01868	-.02081	.40555	.08812	.01640	-.02265
10.000	7.500	.42428	.04601	.02026	.10046	.01890	-.02176	.41714	.09011	.01653	-.02362
10.000	15.000	.43993	.04624	-.00157	.09793	.01885	-.02186	.43269	.09198	.01647	-.02371
10.000	30.000	.46452	.04593	-.02593	.09009	.01735	-.01841	.45717	.09423	.01533	-.02012
10.000	45.000	.48057	.04448	-.03766	.09100	.01697	-.01902	.47329	.09447	.01489	-.02069
10.000	60.000	.49440	.04315	-.04826	.09348	.01696	-.02032	.48718	.09459	.01474	-.02198
	GRADIENT	.00220	.00016	-.00409	-.00006	.00011	-.00050	.00217	.00039	.00005	-.00051

CA20 747/1 02 SI CARRIER DATA (MGN128) (25 NOV 75)

REFERENCE DATA

SREF =	5500.0000 SQ.FT.	XMRP =	1339.9000 IN.XC
LREF =	327.7800 IN.	YMRP =	.0000 IN.YC
BREF =	2348.0400 IN.	ZMRP =	190.8000 IN.ZC
SCALE =	.0300		

PARAMETRIC DATA

ALPHAC =	4.000	BETAC =	-5.000
ELV-IB =	.000	ELV-OB =	3.000
ELEVON =	5.000	MACH =	.600
BETAO =	.000	PHI =	.000
DY =	.000	DX =	20.000

RUN NO. 0/ 0 RN/L = 3.32 GRADIENT INTERVAL = .00/ 12.00

ALPHAO	DZ	CN	CA	CLM	CY	CBL	CYN	CL	CD	CSL	CLN
10.000	.000	.42919	.04407	.02900	.09990	.01744	-.01776	.42223	.08869	.01549	-.01949
10.000	3.000	.42230	.04374	.02570	.10199	.01831	-.02095	.42535	.08869	.01602	-.02275
10.000	7.500	.44032	.04415	.00801	.10192	.01862	-.02249	.43329	.08984	.01616	-.02432
10.000	15.000	.45552	.04432	-.00948	.09890	.01882	-.02222	.44640	.09149	.01639	-.02407
10.000	30.000	.47264	.04461	-.02983	.09124	.01735	-.01903	.46539	.09377	.01527	-.02074
10.000	45.000	.48704	.04348	-.03933	.08087	.01683	-.01693	.47983	.09415	.01476	-.02059
10.000	60.000	.50159	.04205	-.04883	.08237	.01672	-.01970	.49445	.09425	.01457	-.02134
	GRADIENT	.00151	.00002	-.00289	.00025	.00015	-.00061	.00150	.00018	.00009	-.00062

CA20 747/1 02 SI CARRIER DATA (MGN129) (25 NOV 75)

REFERENCE DATA

SREF =	5500.0000 SQ.FT.	XMRP =	1339.9000 IN.XC
LREF =	327.7800 IN.	YMRP =	.0000 IN.YC
BREF =	2348.0400 IN.	ZMRP =	190.8000 IN.ZC
SCALE =	.0300		

PARAMETRIC DATA

BETAC =	.000	ELV-IB =	.000
ELV-OB =	3.000	ELEVON =	5.000
MACH =	.600	BETAO =	.000
PHI =	.000	DY =	.000
DX =	.000	ALPHAC =	4.000

RN/L = 3.31 GRADIENT INTERVAL = .00/ 12.00

ALPHAO = 10.000

DZ	CN	CA	CLM	CY	CBL	CYN	CL	CD	CSL	CLN
.000	.40299	.05424	.05272	-.00878	.00035	-.00015	.39511	.09505	.00033	-.00018
3.000	.40859	.05485	.05516	-.00856	.00023	.00033	.40061	.09725	.00026	.00031
7.500	.42776	.05433	.03580	-.00867	.00008	.00026	.41974	.09975	.00017	.00065
15.000	.45045	.05374	.00523	-.00954	-.00020	.00164	.44237	.10053	-.00003	.00165
30.000	.48248	.05153	-.02809	-.01108	-.00068	.00259	.47445	.10163	-.00040	.00265
45.000	.50186	.04976	-.04224	-.01051	-.00053	.00240	.49391	.10195	-.00027	.00245
60.000	.52029	.04818	-.05405	-.01023	-.00008	.00231	.51240	.10230	.00016	.00231
GRADIENT	.00338	.00000	-.00382	.00001	-.00004	.00013	.00335	.00035	-.00002	.00014

CA20 747/1 02 S1 CARRIER DATA (HGN129) (25 NOV 75)

REFERENCE DATA

SREF = 5500.0000 SQ.FT. XMRP = 1339.9000 IN.XC
LREF = 327.7800 IN. YMRP = .0000 IN.YC
BREF = 2348.0400 IN. ZMRP = 190.8000 IN.ZC
SCALE = .0300

PARAMETRIC DATA

BETAC =	.000	ELV-IB =	.000
ELV-OB =	3.000	ELEVON =	5.000
MACH =	.600	BETAO =	.000
PHI =	.000	DY =	.000
DX =	.000	ALPHAC =	4.000

RN/L = 3.29 GRADIENT INTERVAL = .00/ 12.00

ALPHAO = 14.000

DZ	CN	CA	CLM	CY	CBL	CYN	CL	CD	CSL	CLN
.000	.31283	.05194	.17708	-.00714	.00057	-.00080	.30569	.08435	.00048	-.00065
3.000	.32489	.05182	.16787	-.00861	.00026	.00031	.31769	.08549	.00025	.00028
7.500	.34685	.05296	.14191	-.00933	.00007	.00106	.33942	.08893	.00018	.00104
15.000	.38464	.05454	.08646	-.00863	-.00000	.00099	.37684	.09445	.00010	.00099
30.000	.43564	.05316	.02358	-.01001	-.00044	.00212	.42770	.09841	-.00022	.00218
45.000	.46734	.05154	-.00763	-.01056	-.00058	.00253	.45940	.10011	-.00031	.00258
60.000	.48855	.05008	-.02729	-.01062	-.00053	.00253	.48064	.10087	-.00026	.00257
GRADIENT	.00456	.00015	-.00477	-.00028	-.00007	.00024	.00452	.00062	-.00004	.00025

CA20 747/1 02 S1 CARRIER DATA (HGN130) (25 NOV 75)

REFERENCE DATA

SREF = 5500.0000 SQ.FT. XMRP = 1339.9000 IN.XC
LREF = 327.7800 IN. YMRP = .0000 IN.YC
BREF = 2348.0400 IN. ZMRP = 190.8000 IN.ZC
SCALE = .0300

PARAMETRIC DATA

BETAC =	.000	ELV-IB =	.000
ELV-OB =	3.000	ELEVON =	5.000
MACH =	.600	BETAO =	.000
PHI =	.000	DY =	.000
DX =	10.000	ALPHAC =	4.000

RN/L = 3.30 GRADIENT INTERVAL = .00/ 12.00

ALPHAO = 10.000

DZ	CN	CA	CLM	CY	CBL	CYN	CL	CD	CSL	CLN
.000	.42455	.05150	.06118	-.00753	.00048	-.00029	.41694	.09559	.00045	-.00033
3.000	.42902	.05243	.05854	-.00758	.00036	.00017	.42119	.09693	.00037	.00013
7.500	.44208	.05245	.03288	-.00822	.00020	.00092	.43418	.09837	.00029	.00089
15.000	.45906	.05229	.00538	-.00868	-.00008	.00146	.45108	.09939	.00007	.00146
30.000	.49736	.05034	-.02659	-.01114	-.00049	.00261	.47943	.10100	-.00021	.00264
45.000	.50345	.04934	-.04078	-.01052	-.00055	.00242	.49554	.10169	-.00029	.00246
60.000	.51654	.04871	-.05283	-.00949	-.00062	.00213	.50862	.10244	-.00039	.00218
GRADIENT	.00238	.00012	-.00393	-.00010	-.00004	.00016	.00235	.00037	-.00002	.00016

ORIGINAL PAGE IS
OF POOR QUALITY

CA20 747/1 02 SI CARRIER DATA (MGN130) (25 NOV 75)

REFERENCE DATA

SREF = 5500.0000 SQ.FT. XMRP = 1339.9000 IN.XC
LREF = 327.7800 IN. YMRP = .0000 IN.YC
BREF = 2348.0400 IN. ZMRP = 190.8000 IN.ZC
SCALE = .0300

PARAMETRIC DATA

BETAC =	.000	ELV-IB =	.000
ELV-OB =	3.000	ELEVON =	5.000
MACH =	.600	BETAO =	.000
PHI =	.000	DY =	.000
DX =	10.000	ALPHAC =	4.000

RN/L = 3.31 GRADIENT INTERVAL = .00/ 12.00

ALPHAO = 14.000

DZ	CN	CA	CLM	CY	CBL	CYN	CL	CD	CSL	CLN
.000	.34889	.04667	.19932	-.00415	.00075	-.00179	.34210	.08288	.00056	-.00185
3.000	.35604	.04773	.19314	-.00633	.00042	-.00041	.34910	.08468	.00038	-.00045
7.500	.37356	.04976	.15997	-.00803	.00007	.00082	.36631	.08853	.00015	.00081
15.000	.40435	.05165	.09474	-.00849	-.00008	.00137	.39674	.09363	.00006	.00137
30.000	.44554	.05150	.02954	-.00976	-.00046	.00222	.43772	.09779	-.00023	.00225
45.000	.47282	.05041	-.00351	-.01039	-.00062	.00259	.46506	.09956	-.00035	.00264
60.000	.49113	.04944	-.02318	-.01031	-.00067	.00254	.48327	.10050	-.00040	.00260
GRADIENT	.00334	.00042	-.00541	-.00051	-.00009	.00034	.00327	.00076	-.00005	.00035

CA20 747/1 02 SI CARRIER DATA (MGN131) (25 NOV 75)

REFERENCE DATA

SREF = 5500.0000 SQ.FT. XMRP = 1339.9000 IN.XC
LREF = 327.7800 IN. YMRP = .0000 IN.YC
BREF = 2348.0400 IN. ZMRP = 190.8000 IN.ZC
SCALE = .0300

PARAMETRIC DATA

BETAC =	.000	ELV-IB =	.000
ELV-OB =	3.000	ELEVON =	5.000
MACH =	.600	BETAO =	.000
PHI =	.000	DY =	.000
DX =	20.000	ALPHAC =	4.000

RN/L = 3.29 GRADIENT INTERVAL = .00/ 12.00

ALPHAO = 10.000

DZ	CN	CA	CLM	CY	CBL	CYN	CL	CD	CSL	CLN
.000	.44481	.04921	.04228	-.00833	.00021	.00034	.43723	.09543	.00025	.00032
3.000	.44795	.05024	.03997	-.00889	.00002	.00101	.44025	.09678	.00012	.00100
7.500	.45805	.05088	.02237	-.01010	-.00026	.00182	.45023	.09848	-.00007	.00184
15.000	.47187	.05098	-.00187	-.01055	-.00054	.00235	.46395	.10003	-.00030	.00239
30.000	.49338	.05000	-.02876	-.01205	-.00093	.00320	.48545	.10130	-.00059	.00328
45.000	.50717	.04918	-.04117	-.01103	-.00083	.00282	.49925	.10192	-.00053	.00289
60.000	.51915	.04834	-.04836	-.00942	-.00062	.00221	.51125	.10234	-.00039	.00226
GRADIENT	.00180	.00022	-.00275	-.00024	-.00006	.00020	.00177	.00040	-.00004	.00020

CA20 747/1 02 S1 CARRIER DATA (HGN131) (25 NOV 75)

REFERENCE DATA

SREF =	5500.0000 SQ.FT.	XMRP =	1339.9000 IN.XC
LREF =	327.7800 IN.	YMRP =	.0000 IN.YC
BREF =	2348.0400 IN.	ZMRP =	190.8000 IN.ZC
SCALE =	.0300		

PARAMETRIC DATA

BETAC =	.000	ELV-IB =	.000
ELV-OB =	3.000	ELEVON =	5.000
MACH =	.600	BETAO =	.000
PHI =	.000	DY =	.000
DX =	20.000	ALPHAC =	4.000

RN/L = 3.30 GRADIENT INTERVAL = .00/ 12.00

ALPHAO = 14.000

DZ	CN	CA	CLM	CY	CBL	CYN	CL	CD	CSL	CLN
.000	.38070	.04376	.18797	-.00708	.00036	-.00053	.37404	.08331	.00031	-.00056
3.000	.38636	.04547	.18277	-.00782	.00016	.00022	.37949	.08561	.00018	.00020
7.500	.40081	.04781	.15171	-.00891	-.00005	.00118	.39362	.08945	.00007	.00118
15.000	.42398	.04979	.09597	-.01016	-.00037	.00217	.41645	.09384	-.00014	.00220
30.000	.45826	.04972	.03231	-.01155	-.00081	.00292	.45055	.09735	-.00050	.00299
45.000	.48019	.04953	-.00130	-.01121	-.00079	.00286	.47239	.09945	-.00048	.00292
60.000	.49537	.04901	-.02092	-.01148	-.00089	.00296	.48754	.10052	-.00059	.00303
GRADIENT	.00272	.00054	-.00500	-.00024	-.00005	.00023	.00265	.00082	-.00003	.00023

CA20 747/1 02 S1 CARRIER DATA (HGN132) (25 NOV 75)

REFERENCE DATA

SREF =	5500.0000 SQ.FT.	XMRP =	1339.9000 IN.XC
LREF =	327.7800 IN.	YMRP =	.0000 IN.YC
BREF =	2348.0400 IN.	ZMRP =	190.8000 IN.ZC
SCALE =	.0300		

PARAMETRIC DATA

BETAC =	.000	ELV-IB =	.000
ELV-OB =	3.000	ELEVON =	5.000
MACH =	.600	BETAO =	.000
PHI =	.000	DY =	.000
DX =	.000	ALPHAC =	8.000

RN/L = 3.29 GRADIENT INTERVAL = .00/ 12.00

ALPHAO = 10.000

DZ	CN	CA	CLM	CY	CBL	CYN	CL	CD	CSL	CLN
.000	.81309	.00887	-.09768	-.01063	-.00045	.00040	.79920	.14993	-.00037	.00047
3.000	.81817	.00799	-.09763	-.01147	-.00059	.00118	.80435	.14994	-.00038	.00127
7.500	.82579	.00702	-.09719	-.01223	-.00072	.00199	.81203	.15031	-.00035	.00209
15.000	.83620	.00584	-.09396	-.01237	-.00086	.00274	.82246	.15095	-.00037	.00286
30.000	.85329	.00435	-.09022	-.01178	-.00068	.00293	.83957	.15246	-.00016	.00301
45.000	.86392	.00401	-.08278	-.01078	-.00033	.00274	.85010	.15397	.00015	.00275
60.000	.87150	.00423	-.07669	-.01112	-.00006	.00289	.85753	.15550	.00044	.00285
GRADIENT	.00169	-.00024	.00009	-.00021	-.00004	.00021	.00171	.00005	.00000	.00021

CA20 747/1 02 S1 CARRIER DATA (MGN132) (25 NOV 75)

REFERENCE DATA

SREF = 5500.0000 SQ.FT. XMRP = 1339.9000 IN.XC
LREF = 327.7800 IN. YMRP = .0000 IN.YC
BREF = 2348.0400 IN. ZMRP = 190.8000 IN.ZC
SCALE = .0300

PARAMETRIC DATA

BETAC = .000 ELV-IB = .000
ELV-OB = 3.000 ELEVON = 5.000
MACH = .600 BETAO = .000
PHI = .000 DY = .000
DX = .000 ALPHAC = 8.000

RN/L = 3.28 GRADIENT INTERVAL = .00/ 12.00

ALPHAO = 14.000

DZ	CN	CA	CLM	CY	CBL	CYN	CL	CD	CSL	CLN
.000	.72748	.00789	.01735	-.01121	-.00005	.00028	.71506	.13409	-.00000	.00029
3.000	.73798	.00799	.00905	-.01137	-.00025	.00093	.72538	.13602	-.00009	.00086
7.500	.75803	.00695	-.01711	-.01172	-.00040	.00160	.74531	.13948	-.00011	.00164
15.000	.78204	.00582	-.04228	-.01256	-.00077	.00246	.76918	.14133	-.00034	.00255
30.000	.81728	.00379	-.05401	-.01309	-.00134	.00332	.80421	.14565	-.00074	.00350
45.000	.83990	.00315	-.07150	-.01274	-.00143	.00312	.82649	.14893	-.00087	.00332
60.000	.85568	.00369	-.07337	-.01165	-.00153	.00274	.84202	.15222	-.00103	.00297
GRADIENT	.00410	-.00013	-.00469	-.00007	-.00005	.00017	.00406	.00058	-.00001	.00018

CA20 747/1 02 S1 CARRIER DATA (MGN133) (25 NOV 75)

REFERENCE DATA

SREF = 5500.0000 SQ.FT. XMRP = 1339.9000 IN.XC
LREF = 327.7800 IN. YMRP = .0000 IN.YC
BREF = 2348.0400 IN. ZMRP = 190.8000 IN.ZC
SCALE = .0300

PARAMETRIC DATA

BETAC = .000 ELV-IB = .000
ELV-OB = 3.000 ELEVON = 5.000
MACH = .600 BETAO = .000
PHI = .000 DY = .000
DX = 10.000 ALPHAC = 8.000

RN/L = 3.32 GRADIENT INTERVAL = .00/ 12.00

ALPHAO = 10.000

DZ	CN	CA	CLM	CY	CBL	CYN	CL	CD	CSL	CLN
.000	.82489	.00702	-.09544	-.00892	.00049	.00023	.81114	.15016	.00053	.00014
3.000	.82858	.00661	-.09349	-.00944	.00029	.00092	.81484	.15039	.00044	.00085
7.500	.83501	.00596	-.09315	-.01042	.00006	.00178	.82129	.15086	.00037	.00174
15.000	.84415	.00513	-.09167	-.01227	-.00031	.00281	.83044	.15164	.00020	.00282
30.000	.85780	.00445	-.08690	-.01190	-.00034	.00307	.84399	.15333	.00020	.00308
45.000	.85706	.00509	-.07956	-.01144	.00016	.00287	.85301	.15558	.00066	.00280
60.000	.87619	.00586	-.07503	-.01161	.00028	.00311	.86187	.15792	.00082	.00302
GRADIENT	.00136	-.00014	.00029	-.00020	-.00006	.00021	.00136	.00009	-.00002	.00021

CA20 747/1 02 SI CARRIER DATA (HGN133) (25 NOV 75)

REFERENCE DATA

SREF = 5500.0000 SQ.FT. XMRP = 1339.9000 IN.XC
LREF = 327.7800 IN. YMRP = .0000 IN.YC
BREF = 2348.0400 IN. ZMRP = 190.8000 IN.ZC
SCALE = .0300

PARAMETRIC DATA

BETAC =	.000	ELV-IB =	.000
ELV-OB =	3.000	ELEVON =	5.000
MACH =	.600	BETAO =	.000
PHI =	.000	DY =	.000
DX =	10.000	ALPHAC =	8.000

RN/L = 3.30 GRADIENT INTERVAL = .00/ 12.00

ALPHAO = 14.000

DZ	CN	CA	CLM	CY	CBL	CYN	CL	CD	CSL	CLN
.000	.76256	.00567	.02615	-.01017	-.00017	.00043	.74999	.13800	-.00009	.00045
3.000	.77005	.00605	.01722	-.01049	-.00033	.00105	.75730	.13969	-.00014	.00111
7.500	.78265	.00554	-.00542	-.01126	-.00056	.00180	.76980	.14136	-.00024	.00187
15.000	.79973	.00462	-.02972	-.01266	-.00087	.00264	.78677	.14342	-.00040	.00275
30.000	.82681	.00380	-.05466	-.01395	-.00151	.00366	.81359	.14732	-.00085	.00386
45.000	.84474	.00375	-.06177	-.01316	-.00150	.00325	.83126	.15039	-.00091	.00346
60.000	.85727	.00413	-.06557	-.01282	-.00148	.00321	.84353	.15293	-.00090	.00342
GRADIENT	.00269	-.00002	-.00427	-.00015	-.00005	.00018	.00265	.00044	-.00002	.00019

ORIGINAL PAGE IS
OF POOR QUALITY

CA20 747/1 02 SI CARRIER DATA (HGN134) (25 NOV 75)

REFERENCE DATA

SREF = 5500.0000 SQ.FT. XMRP = 1339.9000 IN.XC
LREF = 327.7800 IN. YMRP = .0000 IN.YC
BREF = 2348.0400 IN. ZMRP = 190.8000 IN.ZC
SCALE = .0300

PARAMETRIC DATA

BETAC =	.000	ELV-IB =	.000
ELV-OB =	3.000	ELEVON =	5.000
MACH =	.600	BETAO =	.000
PHI =	.000	DY =	.000
DX =	20.000	ALPHAC =	8.000

RN/L = 3.27 GRADIENT INTERVAL = .00/ 12.00

ALPHAO = 10.000

DZ	CN	CA	CLM	CY	CBL	CYN	CL	CD	CSL	CLN
.000	.84337	.00534	-.11403	-.01137	-.00066	.00131	.82963	.15171	-.00043	.00141
3.000	.84440	.00570	-.10538	-.01238	-.00095	.00206	.83059	.15224	-.00058	.00219
7.500	.84872	.00522	-.10275	-.01373	-.00128	.00276	.83492	.15252	-.00079	.00294
15.000	.85749	.00464	-.10165	-.01480	-.00190	.00348	.84365	.15347	-.00126	.00376
30.000	.85753	.00599	-.09747	-.01436	-.00153	.00355	.85331	.15655	-.00089	.00376
45.000	.87263	.00721	-.07783	-.01342	-.00005	.00316	.85812	.15853	.00050	.00312
60.000	.88152	.00781	-.07385	-.01225	.00039	.00335	.86577	.16076	.00096	.00323
GRADIENT	.00073	-.00002	.00143	-.00031	-.00008	.00019	.00073	.00011	-.00005	.00020

CA20 747/1 02 SI CARRIER DATA (MGN134) (25 NOV 75)

REFERENCE DATA

SREF = 5500.0000 SQ.FT. XMRP = 1339.9000 IN.XC
LREF = 327.7800 IN. YMRP = .0000 IN.YC
BREF = 2348.0400 IN. ZMRP = 190.8000 IN.ZC
SCALE = .0300

PARAMETRIC DATA

BETAC =	.000	ELV-IB =	.000
ELV-OB =	3.000	ELEVCN =	5.000
MACH =	.600	BETAO =	.000
PHI =	.000	DY =	.000
DX =	20.000	ALPHAC =	8.000

RN/L = 3.29 GRADIENT INTERVAL = .00/ 12.00

ALPHAO = 14.000

DZ	CN	CA	CLM	CY	CBL	CYN	CL	CD	CSL	CLN
.000	.78538	.00409	.01636	-.01147	-.00050	.00112	.77274	.14040	-.00030	.00119
3.000	.78991	.00517	.01344	-.01275	-.00088	.00204	.77701	.14226	-.00052	.00216
7.500	.79975	.00551	-.00280	-.01428	-.00114	.00312	.78664	.14430	-.00058	.00327
15.000	.81332	.00481	-.02592	-.01531	-.00162	.00372	.80012	.14597	-.00095	.00394
30.000	.83335	.00466	-.04599	-.01615	-.00197	.00425	.81958	.14930	-.00120	.00452
45.000	.84938	.00479	-.05172	-.01398	-.00166	.00344	.83564	.15221	-.00103	.00333
60.000	.85885	.00456	-.05767	-.01377	-.00141	.00362	.84501	.15383	-.00077	.00331
GRADIENT	.00194	.00018	-.00264	-.00037	-.00008	.00026	.00188	.00051	-.00004	.00029

CA20 747/1 02 SI CARRIER DATA (MGN135) (25 NOV 75)

REFERENCE DATA

SREF = 5500.0000 SQ.FT. XMRP = 1339.9000 IN.XC
LREF = 327.7800 IN. YMRP = .0000 IN.YC
BREF = 2348.0400 IN. ZMRP = 190.8000 IN.ZC
SCALE = .0300

PARAMETRIC DATA

ALPHAC =	4.000	BETAC =	-5.000
ELV-IB =	.000	ELV-OB =	3.000
ELEVCN =	5.000	MACH =	.600
BETAO =	.000	PHI =	.000
DY =	10.000	DX =	.000

RUN NO. 0/ 0 RN/L = 3.27 GRADIENT INTERVAL = .00/ 12.00

ALPHAO	DZ	CN	CA	CLM	CY	CBL	CYN	CL	CD	CSL	CLN
10.000	.000	.53861	.04941	-.02951	.08450	.02659	-.02371	.39126	.09081	.02396	-.02535
10.000	3.000	.40823	.04961	-.03119	.08398	.02567	-.02268	.40081	.09201	.02316	-.02524
10.000	7.500	.42110	.04956	-.03633	.08156	.02409	-.02065	.41361	.09331	.02180	-.02305
10.000	15.000	.43921	.04910	-.04059	.07583	.02143	-.01653	.43167	.09474	.01958	-.01883
10.000	30.000	.46472	.04743	-.04305	.07059	.01739	-.01141	.45722	.09574	.01610	-.01317
10.000	45.000	.48325	.04532	-.05112	.08050	.01709	-.01557	.47597	.09559	.01537	-.01727
10.000	60.000	.50162	.04320	-.05843	.08897	.01659	-.01905	.49435	.09540	.01451	-.02068
	GRADIENT	.00293	.00002	-.00093	-.00040	-.00033	.00041	.00297	.00033	-.00089	.00044

CA20 747/1 02 SI CARRIER DATA (HGN136) (25 NOV 75)

REFERENCE DATA

SREF = 5500.0000 SQ.FT. XMRP = 1339.9000 IN.XC
LREF = 327.7800 IN. YMRP = .0000 IN.YC
BREF = 2348.0400 IN. ZMRP = 190.8000 IN.ZC
SCALE = .0300

PARAMETRIC DATA

ALPHAC =	4.000	BETAC =	-5.000
ELV-IB =	.000	ELV-OB =	3.000
ELEVON =	5.000	MACH =	.600
BETAO =	.000	PHI =	.000
DY =	10.000	DX =	10.000

RUN NO. 0/ 0 RN/L = 3.28 GRADIENT INTERVAL = .00/ 12.00

ALPHAO	DZ	CN	CA	CLM	CY	CBL	CYN	CL	CD	CSL	CLN
10.000	.000	.42721	.04500	-.03387	.09121	.02532	-.02550	.42017	.08941	.02251	-.02801
10.000	3.000	.43321	.04551	-.03499	.09075	.02487	-.02473	.42608	.09055	.02215	-.02719
10.000	7.500	.44252	.04585	-.03634	.08748	.02377	-.02246	.43530	.09185	.02130	-.02482
10.000	15.000	.45664	.04585	-.04154	.08056	.02119	-.01790	.44935	.09333	.01920	-.02001
10.000	30.000	.47671	.04540	-.04557	.07436	.01740	-.01277	.46935	.09499	.01597	-.01452
10.000	45.000	.49216	.04355	-.05314	.08151	.01712	-.01598	.48492	.09476	.01535	-.01768
10.000	60.000	.50646	.04135	-.06193	.09257	.01800	-.02201	.49937	.09407	.01550	-.02377
	GRADIENT	.00204	.00011	-.00033	-.00052	-.00021	.00041	.00202	.00032	-.00016	.00043

CA20 747/1 02 SI CARRIER DATA (HGN137) (25 NOV 75)

REFERENCE DATA

SREF = 5500.0000 SQ.FT. XMRP = 1339.9000 IN.XC
LREF = 327.7800 IN. YMRP = .0000 IN.YC
BREF = 2348.0400 IN. ZMRP = 190.8000 IN.ZC
SCALE = .0300

PARAMETRIC DATA

ALPHAC =	4.000	BETAC =	.000
ELV-IB =	.000	ELV-OB =	3.000
ELEVON =	5.000	MACH =	.600
BETAO =	.000	PHI =	.000
DY =	10.000	DX =	.000

RUN NO. 0/ 0 RN/L = 3.35 GRADIENT INTERVAL = .00/ 12.00

ALPHAO	DZ	CN	CA	CLM	CY	CBL	CYN	CL	CD	CSL	CLN
10.000	.000	.38783	.05551	.05084	-.01950	.00945	-.00549	.37991	.09575	.00893	-.00545
10.000	3.000	.39871	.05553	.03978	-.01909	.00773	-.00316	.39072	.09590	.00736	-.00335
10.000	7.500	.41433	.05492	.02267	-.02095	.00589	-.00009	.40632	.09793	.00565	-.00071
10.000	15.000	.43618	.05379	-.00258	-.02379	.00347	.00380	.42817	.09899	.00385	.00342
10.000	30.000	.46539	.05128	-.03103	-.02779	.00016	.00877	.45748	.09955	.00108	.00871
10.000	45.000	.48599	.04949	-.04719	-.02169	-.00041	.00680	.47815	.10091	.00030	.00591
10.000	60.000	.50654	.04772	-.06398	-.01643	-.00116	.00527	.49877	.10041	-.00060	.00525
	GRADIENT	.00353	-.00008	-.00376	-.00021	-.00047	.00072	.00352	.00029	-.00039	.00076

CA20 747/1 02 SI CARRIER DATA (MGN138) (25 NOV 75)

REFERENCE DATA

SREF = 5500.0000 SQ.FT. XMRP = 1339.9000 IN.XC
LREF = 327.7800 IN. YMRP = .0000 IN.YC
BREF = 2348.0400 IN. ZMRP = 190.8000 IN.ZC
SCALE = .0300

PARAMETRIC DATA

ALPHAC =	4.000	BETAC =	.000
ELV-IB =	.000	ELV-OB =	3.000
ELEVON =	5.000	MACH =	.600
BETAO =	.000	PHI =	.000
DY =	10.000	DX =	10.000

RUN NO. 0/ 0 RN/L = 3.29 GRADIENT INTERVAL = .00/ 12.00

ALPHAO	DZ	CN	CA	CLM	CY	CBL	CYN	CL	CD	CSL	CLN
10.000	.000	.41776	.05148	.04045	-.01452	.00788	-.00579	.41009	.09487	.00723	-.00558
10.000	3.000	.42485	.05192	.03326	-.01480	.00649	-.00377	.41709	.09535	.00606	-.00443
10.000	7.500	.43615	.05184	.01711	-.01768	.00488	-.00078	.42834	.09715	.00477	-.00128
10.000	15.000	.45224	.05143	-.00569	-.02141	.00304	.00300	.44439	.09842	.00334	.00265
10.000	30.000	.47718	.04934	-.03361	-.02600	.00002	.00807	.46941	.09995	.00085	.00803
10.000	45.000	.49473	.04795	-.04999	-.02103	-.00055	.00627	.48700	.09940	.00011	.00630
10.000	60.000	.51099	.04688	-.06444	-.01270	-.00033	.00223	.50329	.10004	-.00010	.00225
	GRADIENT	.00246	.00004	-.00315	-.00044	-.00040	.00067	.00244	.00030	-.00032	.00071

CA20 747/1 02 SI CARRIER DATA (MGN139) (25 NOV 75)

REFERENCE DATA

SREF = 5500.0000 SQ.FT. XMRP = 1339.9000 IN.XC
LREF = 327.7800 IN. YMRP = .0000 IN.YC
BREF = 2348.0400 IN. ZMRP = 190.8000 IN.ZC
SCALE = .0300

PARAMETRIC DATA

ALPHAC =	4.000	BETAC =	5.000
ELV-IB =	.000	ELV-OB =	3.000
ELEVON =	5.000	MACH =	.600
BETAO =	.000	PHI =	.000
DY =	10.000	DX =	.000

RUN NO. 0/ 0 RN/L = 3.25 GRADIENT INTERVAL = .00/ 12.00

ALPHAO	DZ	CN	CA	CLM	CY	CBL	CYN	CL	CD	CSL	CLN
10.000	.000	.39244	.04990	.08706	-.11736	-.00709	.01002	.38507	.09065	-.00600	.01070
10.000	3.000	.40456	.04946	.06573	-.11927	-.00938	.01497	.39718	.09148	-.00776	.01597
10.000	7.500	.42080	.04836	.03626	-.12418	-.01186	.02072	.41344	.09308	-.00953	.02185
10.000	15.000	.44128	.04674	-.00309	-.12701	-.01437	.02540	.43398	.09261	-.01164	.02676
10.000	30.000	.47083	.04416	-.04288	-.12812	-.01692	.02910	.46364	.09313	-.01379	.03071
10.000	45.000	.48966	.04257	-.05688	-.12400	-.01765	.02842	.48253	.09352	-.01459	.03011
10.000	60.000	.50873	.04101	-.07122	-.12005	-.01839	.02778	.50165	.09396	-.01538	.02955
	GRADIENT	.00377	-.00021	-.00676	-.00092	-.00063	.00142	.00377	.00019	-.00048	.00147

CA20 747/1 02 SI CARRIER DATA (HGN140) (25 NOV 75)

REFERENCE DATA

SREF = 5500.0000 SQ.FT. XMRP = 1339.9000 IN.XC
LREF = 327.7800 IN. YMRP = .0000 IN.YC
BREF = 2348.0400 IN. ZMRP = 190.8000 IN.ZC
SCALE = .0300

PARAMETRIC DATA

ALPHAC = 4.000 BETAC = 5.000
ELV-IB = .000 ELV-OB = 3.000
ELEVON = 5.000 MACH = .600
BETAO = .000 PHI = .000
DY = 10.000 DX = 10.000

RUN NO. 0/ 0 RN/L = 3.26 GRADIENT INTERVAL = .00/ 12.00

ALPHAO	DZ	CN	CA	CLM	CY	CBL	CYN	CL	CD	CSL	CLN
10.000	.000	.42126	.04734	.07326	-.10875	-.00835	.00900	.41400	.09111	-.00735	.00993
10.000	3.000	.42834	.04740	.05742	-.11152	-.01016	.01347	.42104	.09191	-.00870	.01446
10.000	7.500	.43938	.04654	.03121	-.11822	-.01249	.01971	.43211	.09222	-.01036	.02091
10.000	15.000	.45654	.04535	-.00355	-.12298	-.01448	.02459	.44930	.09282	-.01183	.02597
10.000	30.000	.48152	.04291	-.04323	-.12568	-.01709	.02866	.47440	.09301	-.01400	.03029
10.000	45.000	.49771	.04163	-.05533	-.12149	-.01760	.02769	.49063	.09343	-.01461	.02939
10.000	60.000	.51203	.04072	-.06087	-.11559	-.01762	.02528	.50497	.09402	-.01488	.02699
	GRADIENT	.00242	-.00011	-.00562	-.00128	-.00055	.00142	.00242	.00014	-.00040	.00147

CA20 747/1 01 SI CARRIER DATA (HGN141) (25 NOV 75)

REFERENCE DATA

SREF = 5500.0000 SQ.FT. XMRP = 1339.9000 IN.XC
LREF = 327.7800 IN. YMRP = .0000 IN.YC
BREF = 2348.0400 IN. ZMRP = 190.8000 IN.ZC
SCALE = .0300

PARAMETRIC DATA

ALPHAC = 4.000 BETAC = .000
ELV-IB = 10.000 ELV-OB = 13.000
ELEVON = 5.000 MACH = .600
BETAO = .000 PHI = .000
DX = .000 DY = .000

RN/L = 3.26 GRADIENT INTERVAL = .00/ 12.00

ALPHAO = 10.000

DZ	CN	CA	CLM	CY	CBL	CYN	CL	CD	CSL	CLN
.000	.44446	.05802	-.12605	-.00991	-.00030	.00088	.43626	.10286	-.00021	.00091
3.000	.45141	.05785	-.13015	-.00990	-.00042	.00114	.44321	.10338	-.00031	.00118
7.500	.46430	.05754	-.13354	-.01012	-.00048	.00164	.45607	.10431	-.00031	.00168
15.000	.48455	.05676	-.18028	-.01035	-.00054	.00201	.47631	.10554	-.00033	.00205
30.000	.51289	.05492	-.21574	-.01079	-.00087	.00234	.50471	.10648	-.00062	.00242
45.000	.53177	.05283	-.23216	-.01081	-.00096	.00252	.52372	.10625	-.00070	.00260
60.000	.55238	.05078	-.25263	-.01102	-.00115	.00278	.54445	.10622	-.00086	.00288
GRADIENT	.00266	-.00006	-.00379	-.00003	-.00002	.00010	.00266	.00019	-.00001	.00010

CA20 747/1 01 S1 CARRIER DATA (HGN141) (25 NOV 75)

REFERENCE DATA

SREF = 5500.0000 SQ.FT. XMRP = 1339.9000 IN.XC
LREF = 327.7800 IN. YMRP = .0000 IN.YC
BREF = 2348.0400 IN. ZMRP = 190.8000 IN.ZC
SCALE = .0300

PARAMETRIC DATA

ALPHAC =	4.000	BETAC =	.000
ELV-IB =	10.000	ELV-OB =	13.000
ELEVON =	5.000	MACH =	.600
BETAO =	.000	PHI =	.000
DX =	.000	DY =	.000

RN/L = 3.20 GRADIENT INTERVAL = .00/ 12.00

ALPHAO = 14.000

DZ	CN	CA	CLM	CY	CBL	CYN	CL	CD	CSL	CLN
.000	.35734	.05491	.00278	-.00872	.00030	.00001	.34987	.09108	.00030	-.00002
3.000	.36480	.05508	-.00226	-.01014	-.00016	.00109	.35728	.09200	-.00005	.00110
7.500	.38612	.05696	-.04010	-.01052	-.00038	.00159	.37831	.09600	-.00022	.00161
15.000	.42168	.05833	-.09980	-.00947	-.00036	.00131	.41356	.10090	-.00022	.00134
30.000	.46735	.05682	-.16398	-.01130	-.00095	.00257	.45919	.10389	-.00069	.00266
45.000	.49815	.05476	-.19845	-.01139	-.00097	.00260	.49006	.10485	-.00070	.00269
60.000	.52911	.05271	-.23335	-.01148	-.00099	.00263	.52108	.10565	-.00072	.00271
GRADIENT	.00391	.00029	-.00593	-.00023	-.00009	.00020	.00386	.00067	-.00007	.00021

CA20 747/1 01 S1 CARRIER DATA (HGN142) (25 NOV 75)

REFERENCE DATA

SREF = 5500.0000 SQ.FT. XMRP = 1339.9000 IN.XC
LREF = 327.7800 IN. YMRP = .0000 IN.YC
BREF = 2348.0400 IN. ZMRP = 190.8000 IN.ZC
SCALE = .0300

PARAMETRIC DATA

ALPHAC =	4.000	BETAC =	.000
ELV-IB =	-10.000	ELV-OB =	-7.000
ELEVON =	5.000	MACH =	.600
BETAO =	.000	PHI =	.000
DX =	.000	DY =	.000

RN/L = 3.27 GRADIENT INTERVAL = .00/ 12.00

ALPHAO = 10.000

DZ	CN	CA	CLM	CY	CBL	CYN	CL	CD	CSL	CLN
.000	.32408	.05583	.36264	-.01151	-.00040	.00177	.31667	.08868	-.00022	.00180
3.000	.33236	.05575	.35435	-.01155	-.00056	.00213	.32492	.08943	-.00034	.00218
7.500	.34702	.05541	.33766	-.01177	-.00074	.00250	.33955	.09055	-.00048	.00257
15.000	.36546	.05561	.31268	-.01182	-.00085	.00285	.35788	.09259	-.00055	.00292
30.000	.39170	.05360	.29332	-.01263	-.00118	.00322	.38421	.09320	-.00064	.00332
45.000	.40927	.05211	.28400	-.01224	-.00099	.00330	.40184	.09348	-.00065	.00338
60.000	.42868	.05033	.27349	-.01232	-.00096	.00351	.42154	.09366	-.00060	.00359
GRADIENT	.00307	-.00006	-.00339	-.00004	-.00004	.00010	.00307	.00025	-.00003	.00010

CA20 747/1 01 S1 CARRIER DATA (HGN142) (25 NOV 75)

REFERENCE DATA

SREF = 5500.0000 SQ.FT. XMRP = 1339.9000 IN.XC
LREF = 327.7800 IN. YMRP = .0000 IN.YC
BREF = 2348.0400 IN. ZMRP = 190.8000 IN.ZC
SCALE = .0300

PARAMETRIC DATA

ALPHAC =	4.000	BETAC =	.000
ELV-IB =	-10.000	ELV-OB =	-7.000
ELEVON =	5.000	MACH =	.600
BETAO =	.000	PHI =	.000
DX =	.000	DY =	.000

RN/L = 3.23 GRADIENT INTERVAL = .00/ 12.00

ALPHAO = 14.000

DZ	CN	CA	CLM	CY	CBL	CYN	CL	CD	CSL	CLN
.000	.24699	.05206	.45588	-.01070	.00007	.00085	.24033	.07716	.00016	.00084
3.000	.25733	.05246	.43641	-.01166	-.00020	.00180	.25059	.07861	-.00001	.00181
7.500	.27342	.05375	.41604	-.01281	-.00058	.00267	.26646	.08151	-.00030	.00271
15.000	.30512	.05569	.37688	-.01186	-.00061	.00248	.29782	.08663	-.00035	.00253
30.000	.34861	.05503	.33399	-.01295	-.00098	.00342	.34118	.09032	-.00063	.00350
45.000	.37687	.05372	.31148	-.01277	-.00112	.00342	.36943	.09184	-.00077	.00351
60.000	.40505	.05242	.28893	-.01238	-.00125	.00326	.39762	.09335	-.00091	.00337
GRADIENT	.00353	.00023	-.00525	-.00028	-.00009	.00024	.00349	.00059	-.00006	.00025

CA20 747/1 01 S1 CARRIER DATA (HGN143) (25 NOV 75)

REFERENCE DATA

SREF = 5500.0000 SQ.FT. XMRP = 1339.9000 IN.XC
LREF = 327.7800 IN. YMRP = .0000 IN.YC
BREF = 2348.0400 IN. ZMRP = 190.8000 IN.ZC
SCALE = .0300

PARAMETRIC DATA

ALPHAC =	4.000	BETAC =	.000
RUD-U =	15.000	RUD-L =	15.000
ELEVON =	5.000	AILRON =	.000
BETAO =	.000	PHI =	.000
DX =	.000	DY =	.000

RN/L = 3.27 GRADIENT INTERVAL = .00/ 12.00

ALPHAO = 10.000

DZ	CN	CA	CLM	CY	CBL	CYN	CL	CD	CSL	CLN
.000	.39970	.05829	.06220	.02995	.00423	-.02165	.39171	.09859	.00201	-.02197
3.000	.40693	.05841	.05575	.03234	.00433	-.02241	.39879	.09941	.00204	-.02274
7.500	.42291	.05839	.02812	.03453	.00442	-.02336	.41481	.10095	.00203	-.02369
15.000	.44297	.05799	.00518	.03539	.00430	-.02365	.43482	.10255	.00189	-.02396
30.000	.47127	.05612	-.02209	.03632	.00409	-.02389	.46319	.10347	.00165	-.02417
45.000	.48878	.05452	-.03501	.03760	.00430	-.02448	.48078	.10359	.00181	-.02479
60.000	.50843	.05280	-.05085	.03867	.00440	-.02493	.50051	.10380	.00186	-.02524
GRADIENT	.00313	.00001	-.00467	.00060	.00003	-.00023	.00312	.00032	.00000	-.00023

CA20 747/1 01 SI CARRIER DATA (MGN143) (25 NOV 75)

REFERENCE DATA

SREF = 5500.0000 SQ.FT. XMRP = 1339.9000 IN.XC
LREF = 327.7800 IN. YMRP = .0000 IN.YC
BREF = 2348.0480 IN. ZMRP = 190.8000 IN.ZC
SCALE = .0300

PARAMETRIC DATA

ALPHAC =	4.000	BETAC =	.000
RUD-U =	15.000	RUD-L =	15.000
ELEVON =	5.000	AILRON =	.000
BETAO =	.000	PHI =	.000
DX =	.000	DY =	.000

RN/L = 3.23 GRADIENT INTERVAL = .00/ 12.00

ALPHAO = 14.000

DZ	CN	CA	CLM	CY	CBL	CYN	CL	CD	CSL	CLN
.000	.31662	.05582	.17199	.03308	.00519	-.02350	.30927	.08786	.00276	-.02391
3.000	.32535	.05633	.16070	.03387	.00501	-.02342	.31791	.08923	.00260	-.02391
7.500	.34459	.05754	.13299	.03413	.00491	-.02338	.33693	.09233	.00250	-.02376
15.000	.37901	.05917	.08105	.03794	.00507	-.02518	.37103	.09739	.00248	-.02557
30.000	.42626	.05825	.02493	.03703	.00444	-.02432	.41717	.10106	.00195	-.02465
45.000	.45499	.05658	-.00460	.03739	.00446	-.02445	.44693	.10232	.00196	-.02478
60.000	.48482	.05492	-.03441	.03793	.00450	-.02467	.47680	.10360	.00199	-.02500
GRADIENT	.00377	.00023	-.00528	.00013	-.00004	.00002	.00373	.00060	-.00003	.00002

CA20 747/1 02 SI CARRIER DATA (MGN144) (25 NOV 75)

REFERENCE DATA

SREF = 5500.0000 SQ.FT. XMRP = 1339.9000 IN.XC
LREF = 327.7800 IN. YMRP = .0000 IN.YC
BREF = 2348.0480 IN. ZMRP = 190.8000 IN.ZC
SCALE = .0300

PARAMETRIC DATA

ALPHAC =	4.000	BETAC =	.000
RUD-U =	15.000	RUD-L =	15.000
ELEVON =	5.000	AILRON =	.000
BETAO =	.000	PHI =	.000
DX =	.000	DY =	.000

RN/L = 3.35 GRADIENT INTERVAL = -1.00/ 4.00

ALPHAO = 10.000

DZ	CN	CA	CLM	CY	CBL	CYN	CL	CD	CSL	CLN
.000	.40116	.06051	.01473	.02947	.00409	-.02120	.39293	.10097	.00191	-.02151
3.000	.41183	.06055	.00588	.03178	.00418	-.02195	.40355	.10207	.00193	-.02226
7.500	.42751	.06023	-.01088	.03413	.00439	-.02301	.41919	.10330	.00203	-.02334
15.000	.44631	.05935	-.02341	.03596	.00441	-.02382	.43799	.10430	.00197	-.02414
30.000	.47439	.05720	-.03796	.03758	.00428	-.02436	.46616	.10492	.00180	-.02467
45.000	.49094	.05544	-.04691	.03911	.00448	-.02509	.48282	.10477	.00192	-.02541
60.000	.50973	.05357	-.05682	.04059	.00461	-.02573	.50172	.10473	.00199	-.02606
GRADIENT	.00356	.00001	-.00295	.00077	.00003	-.00025	.00354	.00037	.00000	-.00025

CA20 747/1 01 S1 CARRIER DATA (MGN145) (25 NOV 75)

REFERENCE DATA

SREF = 5500.0000 SQ.FT. XMRP = 1339.9000 IN.XC
LREF = 327.7800 IN. YMRP = .0000 IN.YC
BREF = 2348.0400 IN. ZMRP = 190.8000 IN.ZC
SCALE = .0300

PARAMETRIC DATA

ALPHAC = 4.000 BETAC = .000
ELV-IB = .000 ELV-OB = 3.000
ELEVON = .000 MACH = .600
BETAO = .000 PHI = .000
DX = .000 DY = .000

RN/L = 3.37 GRADIENT INTERVAL = .00/ 12.00

ALPHAO = 10.000

DZ	CN	CA	CLM	CY	CBL	CYN	CL	CD	CSL	CLN
.000	.42187	.05793	-.01770	-.00889	.00004	.00084	.41379	.10052	.00012	.00083
3.000	.42851	.05757	-.02075	-.00904	-.00011	.00113	.42044	.10081	.00000	.00113
7.500	.44084	.05688	-.03362	-.00982	-.00036	.00167	.43279	.10134	-.00019	.00169
15.000	.45982	.05519	-.04842	-.01030	-.00061	.00242	.45185	.10154	-.00036	.00247
30.000	.48277	.05283	-.06171	-.01069	-.00090	.00261	.47494	.10145	-.00063	.00269
45.000	.49910	.05074	-.06591	-.01043	-.00099	.00249	.49140	.10099	-.00073	.00257
60.000	.51660	.04865	-.07189	-.01039	-.00114	.00242	.50903	.10065	-.00069	.00252
GRADIENT	.00255	-.00014	-.00218	-.00013	-.00005	.00011	.00255	.00011	-.00004	.00012

RN/L = 3.36 GRADIENT INTERVAL = .00/ 12.00

ALPHAO = 14.000

DZ	CN	CA	CLM	CY	CBL	CYN	CL	CD	CSL	CLN
.000	.33692	.05501	.10071	-.00899	.00015	.00051	.32953	.08915	.00020	.00049
3.000	.34526	.05557	.10124	-.00972	-.00011	.00122	.33778	.09054	.00001	.00123
7.500	.36592	.05705	.06779	-.00949	-.00025	.00135	.35908	.09417	-.00011	.00137
15.000	.39840	.05692	.02478	-.00952	-.00039	.00161	.39054	.09718	-.00022	.00164
30.000	.44123	.05487	-.01754	-.01094	-.00089	.00270	.43338	.09939	-.00060	.00277
45.000	.46767	.05269	-.03831	-.01050	-.00080	.00253	.45991	.09983	-.00054	.00260
60.000	.49409	.05048	-.05913	-.01006	-.00072	.00235	.48644	.10026	-.00048	.00241
GRADIENT	.00405	.00028	-.00463	-.00006	-.00005	.00011	.00400	.00069	-.00004	.00011

CA20 747/1 01 SI CARRIER DATA (MGN146) (25 NOV 75)

REFERENCE DATA

SREF = 5500.0000 SQ.FT. XMRP = 1339.9000 IN.XC
LREF = 327.7800 IN. YMRP = .0000 IN.YC
BREF = 2348.0400 IN. ZMRP = 190.8000 IN.ZC
SCALE = .0300

PARAMETRIC DATA

ALPHAC =	4.000	BETAC =	.000
ELV-IB =	.000	ELV-OB =	3.000
ELEVON =	10.000	MACH =	.600
BETAO =	.000	PHI =	.000
DX =	.000	DY =	.000

RN/L = 3.33 GRADIENT INTERVAL = .00/ 12.00

ALPHAO = 10.000

DZ	CN	CA	CLM	CY	CBL	CYN	CL	CD	CSL	CLN
.000	.37956	.05286	.12023	-.01083	-.00045	.00131	.37222	.09119	-.00031	.00134
3.000	.38562	.05302	.11125	-.01111	-.00060	.00178	.37823	.09195	-.00041	.00183
7.500	.39364	.05363	.08657	-.01152	-.00083	.00240	.39213	.09394	-.00058	.00248
15.000	.42567	.05399	.03360	-.01129	-.00090	.00248	.41800	.09687	-.00064	.00256
30.000	.45946	.05248	-.00791	-.01101	-.00121	.00258	.45080	.09860	-.00094	.00269
45.000	.48017	.05121	-.03353	-.01081	-.00106	.00257	.47254	.09947	-.00080	.00265
60.000	.50328	.04930	-.05957	-.01067	-.00102	.00261	.49568	.10032	-.00075	.00270
GRADIENT	.00271	.00011	-.00457	-.00009	-.00005	.00015	.00269	.00037	-.00004	.00015

RN/L = 3.27 GRADIENT INTERVAL = .00/ 12.00

ALPHAO = 14.000

DZ	CN	CA	CLM	CY	CBL	CYN	CL	CD	CSL	CLN
.000	.29583	.04868	.23509	-.00931	.00010	.00038	.28930	.07867	.00013	.00037
3.000	.30457	.05024	.21537	-.00954	-.00021	.00081	.29784	.08110	-.00013	.00083
7.500	.32088	.05111	.18417	-.01067	-.00042	.00158	.31399	.08359	-.00026	.00161
15.000	.35719	.05445	.12320	-.01097	-.00073	.00210	.34979	.09054	-.00051	.00216
30.000	.41014	.05440	.04423	-.01158	-.00103	.00277	.40250	.09574	-.00074	.00286
45.000	.44429	.05289	.00170	-.01124	-.00092	.00279	.43665	.09761	-.00064	.00287
60.000	.47836	.05144	-.04019	-.01085	-.00083	.00279	.47072	.09952	-.00054	.00286
GRADIENT	.00335	.00031	-.00680	-.00019	-.00007	.00016	.00331	.00065	-.00005	.00017

ORIGINAL PAGE IS
OF POOR QUALITY

CA20 747/1 01 SI CARRIER DATA (MGN147) (25 NOV 75)

REFERENCE DATA

SREF = 5500.0000 SQ.FT. XMRP = 1339.9000 IN.XC
LREF = 327.7800 IN. YMRP = .0000 IN.YC
BREF = 2348.0400 IN. ZMRP = 190.8000 IN.ZC
SCALE = .0300

PARAMETRIC DATA

ALPHAC =	4.000	BETAC =	.000
ELV-IB =	.000	ELV-OB =	3.000
ELEVON =	10.000	MACH =	.300
BETAO =	.000	PHI =	.000
DX =	.000	DY =	.000

RN/L = 1.89 GRADIENT INTERVAL = .00/ 12.00

ALPHAO = 10.000

DZ	CN	CA	CLM	CY	CBL	CYN	CL	CD	CSL	CLN
.000	.35069	.04771	.08837	-.01416	-.00023	.00143	.34402	.08314	-.00009	.00144
3.000	.35625	.04813	.07696	-.01449	-.00049	.00206	.34951	.08410	-.00028	.00210
7.500	.37006	.04868	.04576	-.01467	-.00078	.00282	.35320	.08503	-.00049	.00288
15.000	.39227	.04908	-.00175	-.01475	-.00084	.00323	.38527	.08862	-.00051	.00330
30.000	.41951	.04849	-.04169	-.01530	-.00110	.00344	.41244	.09073	-.00075	.00354
45.000	.43955	.04718	-.06914	-.01566	-.00130	.00363	.43252	.09140	-.00093	.00374
60.000	.46079	.04603	-.09712	-.01610	-.00154	.00379	.45378	.09234	-.00115	.00393
GRADIENT	.00262	.00013	-.00578	-.00007	-.00007	.00018	.00260	.00039	-.00005	.00019

CA20 747/1 01 SI CARRIER DATA (MGN148) (25 NOV 75)

REFERENCE DATA

SREF = 5500.0000 SQ.FT. XMRP = 1339.9000 IN.XC
LREF = 327.7800 IN. YMRP = .0000 IN.YC
BREF = 2348.0400 IN. ZMRP = 190.8000 IN.ZC
SCALE = .0300

PARAMETRIC DATA

ALPHAC =	4.000	BETAC =	.000
ELV-IB =	.000	ELV-OB =	3.000
ELEVON =	10.000	MACH =	.700
BETAO =	.000	PHI =	.000
DX =	.000	DY =	.000

RN/L = 3.54 GRADIENT INTERVAL = .00/ 12.00

ALPHAO = 10.000

DZ	CN	CA	CLM	CY	CBL	CYN	CL	CD	CSL	CLN
.000	.38183	.05462	.17534	-.00767	-.00003	.00041	.37428	.09319	.00002	.00041
3.000	.38969	.05526	.16290	-.00774	-.00026	.00085	.39205	.09461	-.00017	.00077
7.500	.40657	.05505	.13661	-.00840	-.00038	.00145	.39878	.09705	-.00023	.00149
15.000	.43705	.05656	.07948	-.00830	-.00061	.00165	.42907	.10058	-.00044	.00171
30.000	.47497	.05573	.03072	-.00762	-.00067	.00166	.46589	.10349	-.00050	.00172
45.000	.49989	.05443	.00529	-.00898	-.00072	.00209	.49184	.10460	-.00050	.00216
60.000	.52607	.05315	-.02122	-.00978	-.00075	.00245	.51804	.10586	-.00050	.00251
GRADIENT	.00334	.00019	-.00522	-.00010	-.00005	.00014	.00330	.00052	-.00003	.00014

CA20 747/1 01 S1 CARRIER DATA (MGN149) (25 NOV 75)

REFERENCE DATA

SREF =	5500.0000 SQ.FT.	XMRP =	1339.9000	IN.XC	
LREF =	327.7800 IN.	YMRP =	.0000	IN.YC	
BREF =	2348.0400 IN.	ZMRP =	190.8000	IN.ZC	
SCALE =	.0300				

PARAMETRIC DATA

ALPHAC =	4.000	BETAC =	.000
RUD-U =	.000	RUD-L =	.000
ELEVON =	5.000	AILRON =	-10.000
BETAO =	.000	PHI =	.000
DX =	.000	DY =	.000

RN/L = 3.34 GRADIENT INTERVAL = .00/ 12.00

ALPHAO = 10.000

DZ	CN	CA	CLM	CY	CBL	CYN	CL	CD	CSL	CLN
.000	.40013	.05308	.06431	-.01883	.00435	-.00023	.39263	.09361	.00431	-.00067
3.000	.40810	.05310	.05284	-.01920	.00362	.00062	.40056	.09443	.00367	.00025
7.500	.42239	.05254	.03239	-.02295	.00257	.00325	.41483	.09529	.00289	.00298
15.000	.44431	.05270	-.00408	-.03353	-.00021	.01068	.43665	.09760	.00089	.01065
30.000	.47291	.05101	-.03459	-.03321	-.00234	.01281	.46529	.09875	-.00103	.01298
45.000	.49180	.05072	-.04859	-.01957	-.00155	.00672	.48413	.10032	-.00086	.00694
60.000	.51253	.04998	-.06474	-.00826	-.00133	.00207	.50484	.10161	-.00111	.00220
GRADIENT	.00298	-.00008	-.00428	-.00057	-.00024	.00047	.00298	.00022	-.00019	.00059

RN/L = 3.29 GRADIENT INTERVAL = .00/ 12.00

ALPHAO = 14.000

DZ	CN	CA	CLM	CY	CBL	CYN	CL	CD	CSL	CLN
.000	.32503	.05214	.15155	-.01076	.00512	-.00528	.31798	.08517	.00455	-.00578
3.000	.33009	.05215	.15677	-.01346	.00481	-.00333	.32301	.08567	.00444	-.00381
7.500	.34974	.05329	.12174	-.01757	.00380	-.00035	.34245	.08879	.00375	-.00074
15.000	.38078	.05364	.07535	-.02534	.00221	.00539	.37332	.09221	.00275	.00513
30.000	.42816	.05286	.01277	-.03471	-.00131	.01284	.42056	.09618	.00001	.01291
45.000	.45947	.05188	-.01878	-.02679	-.00184	.01006	.45083	.09819	-.00081	.01019
60.000	.48501	.05085	-.05053	-.01916	-.00245	.00745	.48133	.10015	-.00168	.00765
GRADIENT	.00338	.00016	-.00428	-.00091	-.00018	.00066	.00335	.00050	-.00011	.00067

CA20 01 S2 S3 ORBITER DATA (NGN001) (03 MAR 75)

REFERENCE DATA

SREF = 2690.0000 SQ.FT. XMRP = 1109.0000 IN.XO
LREF = 474.8100 IN. YMRP = .0000 IN.YO
BREF = 935.6800 IN. ZMRP = 375.0000 IN.ZO
SCALE = .0300

PARAMETRIC DATA

ELEVON = 5.000 AILRON = .000
BETAO = -5.000 PHI = .000

RN/L = 1.92 GRADIENT INTERVAL = .00/ 12.00

MACH = .300

ALPHAO	CN	CA	CLM	CY	CBL	CYN	CL	CD	CSL	CLN
6.000	.34483	.01186	-.01572	.06695	-.00642	.01513	.34170	.04784	-.00480	.01572
8.000	.44183	-.00029	-.01266	.06665	-.00493	.01514	.43757	.06121	-.00278	.01567
10.000	.54054	-.01455	-.00866	.06485	-.00287	.01566	.53486	.07554	-.00011	.01592
12.000	.63852	-.02982	-.00419	.06390	-.00032	.01553	.63076	.10759	.00292	.01526
14.000	.73809	-.04577	.00132	.06183	.00048	.01591	.72724	.13415	.00432	.01532
16.000	.84261	-.06135	.00808	.06102	.00059	.01643	.82688	.17328	.00510	.01593
18.000	.95437	-.07751	.01142	.05880	.00282	.01592	.93161	.22119	.00757	.01418
GRADIENT	.04899	-.00696	.00193	-.00055	.00102	.00009	.04822	.00928	.00129	-.00006

RN/L = 2.80 GRADIENT INTERVAL = .00/ 12.00

MACH = .480

ALPHAO	CN	CA	CLM	CY	CBL	CYN	CL	CD	CSL	CLN
6.000	.35171	.01246	-.01696	.07130	-.00653	.01490	.34848	.04916	-.00494	.01559
8.000	.45189	-.00069	-.01504	.07152	-.00481	.01436	.44759	.06221	-.00276	.01489
10.000	.55634	-.01526	-.01271	.06928	-.00230	.01516	.55053	.08157	.00037	.01532
12.000	.65801	-.02822	-.00620	.06944	-.00005	.01481	.64950	.10920	.00303	.01450
14.000	.76135	-.04284	.00306	.06551	.00160	.01582	.74910	.14262	.00538	.01495
16.000	.87081	-.04403	.00845	.06780	-.00194	.01337	.84921	.19770	.00182	.01339
18.000	.97519	-.04024	.01080	.06485	-.00354	.01364	.93990	.26308	.00065	.01407
GRADIENT	.05117	-.00693	.00173	-.00054	.00110	.00003	.05030	.00998	.00135	-.00013

CA20 01 S2 S3 ORBITER DATA (NGN002) (03 MAR 75)

REFERENCE DATA

SREF = 2690.0000 SQ.FT. XMRP = 1109.0000 IN.XO
LREF = 474.8100 IN. YMRP = .0000 IN.YO
BREF = 936.6900 IN. ZMRP = 375.0000 IN.ZO
SCALE = .0300

PARAMETRIC DATA

ELEVON = 5.000 AILRON = .000
BETAO = .000 PHI = .000

RN/L = 1.89 GRADIENT INTERVAL = .00/ 12.00

MACH = .300

ALPHAO	CN	CA	CLM	CY	CBL	CYN	CL	CD	CSL	CLN
6.000	.33845	.01476	-.01368	.00539	-.00270	.00092	.33505	.05065	-.00259	.00120
8.000	.43574	.00172	-.01103	.00587	-.00299	.00060	.43126	.06234	-.00288	.00101
10.000	.53530	-.01321	-.00832	.00585	-.00315	.00053	.52946	.07994	-.00301	.00107
12.000	.63278	-.02896	-.00086	.00505	-.00297	.00089	.62496	.10324	-.00272	.00149
14.000	.73483	-.04485	.00569	.00462	-.00271	.00065	.72395	.13426	-.00247	.00130
16.000	.84383	-.06135	.00888	.00306	-.00205	.00114	.82805	.17362	-.00165	.00165
18.000	.95736	-.07788	.01233	.00242	-.00203	.00115	.93457	.22177	-.00157	.00172
GRADIENT	.04913	-.00730	.00206	-.00005	-.00005	-.00001	.04840	.00986	-.00003	.00005

CA20 01 S2 S3 ORBITER DATA (NGN003) (03 MAR 75)

REFERENCE DATA

SREF = 2690.0000 SQ.FT. XMRP = 1109.0000 IN.XO
LREF = 474.8100 IN. YMRP = .0000 IN.YO
BREF = 936.6900 IN. ZMRP = 375.0000 IN.ZO
SCALE = .0300

PARAMETRIC DATA

ELEVON = 5.000 AILRON = .000
BETAO = .000 PHI = .000

RN/L = 3.28 GRADIENT INTERVAL = .00/ 12.00

MACH = .600

ALPHAO	CN	CA	CLM	CY	CBL	CYN	CL	CD	CSL	CLN
6.000	.36882	.01834	-.00916	-.00155	-.00171	.00025	.36489	.05579	-.00167	.00042
8.000	.47346	.00707	-.00450	-.00180	-.00182	.00034	.46786	.07289	-.00176	.00059
10.000	.57510	-.00487	.00524	-.00216	-.00137	.00056	.56721	.09507	-.00125	.00079
12.000	.67569	-.02152	.01722	-.00289	-.00070	.00101	.65539	.11943	-.00047	.00114
14.000	.77705	-.05074	.02401	-.00274	-.00059	.00101	.76625	.13875	-.00032	.00112
16.000	.88002	-.10067	.01813	-.00049	-.00169	-.00025	.87368	.14580	-.00169	.00023
18.000	.98421	-.17959	-.00789	.00514	-.00457	-.00357	.99154	.13334	-.00548	-.00208
GRADIENT	.05111	-.00658	.00445	-.00022	.00017	.00013	.05004	.01051	.00021	.00012

CA20 01 S2 S3 ORBITER DATA (NGN004) (03 MAR 75)

REFERENCE DATA

SREF = 2690.0000 SQ.FT. XMRP = 1109.0000 IN.XO
LREF = 474.8100 IN. YMRP = .0000 IN.YO
BREF = 936.6800 IN. ZMRP = 375.0000 IN.ZO
SCALE = .0300

PARAMETRIC DATA

ELEVON = 5.000 AILRON = .000
BETAO = .000 PHI = .000

RN/L = 3.26 GRADIENT INTERVAL = .00/ 12.00

MACH = .600

ALPHAO	CN	CA	CLM	CY	CBL	CYN	CL	CD	CSL	CLN
6.000	.35673	.01861	-.01152	.00359	-.00254	.00075	.35283	.05579	-.00245	.00101
8.000	.45998	.00934	-.00609	.00390	-.00283	.00045	.45434	.07227	-.00274	.00084
10.000	.56183	-.00472	.00283	.00394	-.00224	.00053	.55411	.09291	-.00211	.00091
12.000	.67348	-.01395	.01185	.00225	-.00214	.00141	.66165	.12638	-.00180	.00182
14.000	.76573	-.03009	.01698	.00403	-.00283	.00048	.75026	.15505	-.00263	.00115
16.000	.84184	-.07432	.01705	.00519	-.00242	-.00034	.82972	.16060	-.00242	.00034
18.000	.93101	-.14763	.00457	.00671	-.00266	.00009	.93106	.14730	-.00250	.00091
GRADIENT	.05260	-.00554	.00395	-.00020	.00009	.00010	.05131	.01162	.00013	.00013

CA20 02 S2 S3 ORBITER DATA (NGN005) (03 MAR 75)

REFERENCE DATA

SREF = 2690.0000 SQ.FT. XMRP = 1109.0000 IN.XO
LREF = 474.8100 IN. YMRP = .0000 IN.YO
BREF = 936.6800 IN. ZMRP = 375.0000 IN.ZO
SCALE = .0300

PARAMETRIC DATA

ELEVON = 5.000 AILRON = .000
BETAO = -5.000 PHI = .000

RN/L = 2.87 GRADIENT INTERVAL = .00/ 12.00

MACH = .480

ALPHAO	CN	CA	CLM	CY	CBL	CYN	CL	CD	CSL	CLN
6.000	.34354	.04501	-.00292	.07360	-.00344	.01015	.33696	.08067	-.00236	.01046
8.000	.43953	.03391	.00296	.07386	-.00162	.00984	.43054	.09476	-.00023	.00997
10.000	.53950	.02075	.00889	.07275	.00083	.00984	.52770	.11412	.00253	.00955
12.000	.64277	.00618	.01462	.07178	.00308	.00964	.62744	.13968	.00502	.00879
14.000	.75225	-.01129	.02083	.06986	.00478	.01090	.73264	.17103	.00728	.00942
16.000	.86347	-.01390	.02315	.07322	.00050	.00812	.83325	.22464	.00272	.00767
18.000	.96893	-.01121	.02653	.07057	-.00119	.00855	.92497	.28875	.00154	.00559
GRADIENT	.04998	-.00648	.00293	-.00033	.00110	-.00008	.04643	.00932	.00124	-.00027

CA20 02 S2 S3 ORBITER DATA (NGNDOS) (03 MAR 75)

REFERENCE DATA

SREF = 2690.0000 SQ.FT. XMRP = 1109.0000 IN.XO
LREF = 474.8100 IN. YMRP = .0000 IN.YO
BREF = 936.6800 IN. ZMRP = 375.0000 IN.ZO
SCALE = .0300

PARAMETRIC DATA

ELEVON = 5.000 AILRON = .000
SETAO = .000 PHI = .000

RN/L = 2.85 GRADIENT INTERVAL = .00/ 12.00

MACH = .460

ALPHAO	CN	CA	CLM	CY	CBL	CYN	CL	CD	CSL	CLN
6.000	.34527	.04451	-.00324	.00259	-.00236	.00065	.33872	.08035	-.00228	.00089
8.000	.44357	.03161	.00123	.00294	-.00280	.00060	.43485	.09304	-.00269	.00099
10.000	.54600	.01703	.00647	.00199	-.00253	.00065	.53475	.11159	-.00237	.00107
12.000	.64611	.00235	.01480	.00143	-.00239	.00086	.63150	.13653	-.00216	.00134
14.000	.75182	-.01239	.02269	-.00011	-.00185	.00150	.72263	.16927	-.00143	.00150
16.000	.86975	-.01759	.02441	.00563	-.00429	-.00152	.84091	.22283	-.00454	-.00028
18.000	.97022	-.00657	.02818	.00238	-.00499	-.00050	.92534	.29375	-.00498	.00107
GRADIENT	.05025	-.00705	.00297	-.00022	.00001	.00003	.04891	.00937	.00003	.00007

RN/L = 3.37 GRADIENT INTERVAL = .00/ 12.00

MACH = .600

ALPHAO	CN	CA	CLM	CY	CBL	CYN	CL	CD	CSL	CLN
6.000	.35453	.04527	-.00428	.00241	-.00227	.00052	.34786	.08208	-.00220	.00076
8.000	.45990	.03247	-.00388	.00145	-.00244	.00073	.45091	.09516	-.00231	.00107
10.000	.56454	.01873	.00550	.00113	-.00212	.00078	.55271	.11648	-.00195	.00113
12.000	.67692	.00476	.01208	-.00030	-.00207	.00177	.66114	.14540	-.00155	.00216
14.000	.77682	.00943	.01851	.00063	-.00269	.00090	.75127	.19703	-.00239	.00152
16.000	.85586	.00093	.02039	.00147	-.00246	.00034	.83205	.23955	-.00227	.00101
18.000	.95220	-.05405	.00972	.00148	-.00155	.00075	.92325	.24315	-.00124	.00119
GRADIENT	.05359	-.00676	.00277	-.00042	.00005	.00019	.05208	.01051	.00010	.00021

ORIGINAL PAGE IS
OF POOR QUALITY

CA20 01 S1 ORBITER DATA (NGN007) (03 MAR 75)

REFERENCE DATA

SREF = 2690.0000 SQ.FT. XMRP = 1109.0000 IN.XO
LREF = 474.8100 IN. YMRP = .0000 IN.YO
BREF = 936.6800 IN. ZMRP = 375.0000 IN.ZO
SCALE = .0300

PARAMETRIC DATA

ELEVON = 5.000 AILRON = .000
BETAO = -5.000 PHI = .000

RN/L = 2.00 GRADIENT INTERVAL = .00/ 12.00

MACH = .300

ALPHAO	CN	CA	CLM	CY	CBL	CYN	CL	CD	CSL	CLN
6.000	.35106	.00729	-.03010	.04721	-.00707	.01503	.34838	.04394	-.00546	.01559
8.000	.44122	-.00402	-.02203	.04705	-.00583	.01531	.43748	.05742	-.00355	.01597
10.000	.54061	-.01842	-.02028	.04593	-.00354	.01611	.53560	.07573	-.00069	.01648
12.000	.63743	-.03498	-.01462	.04469	-.00111	.01663	.63078	.09932	.00237	.01650
14.000	.73486	-.05077	-.00488	.04412	-.00051	.01721	.72531	.12851	.00367	.01682
16.000	.84046	-.06770	.00073	.04262	.00036	.01827	.82656	.16559	.00538	.01746
18.000	.95054	-.08560	.00571	.04021	.00283	.01925	.93047	.21233	.00864	.01743
GRADIENT	.04793	-.00706	.00241	-.00043	.00101	.00028	.04727	.00907	.00132	.00015

RN/L = 3.41 GRADIENT INTERVAL = .00/ 12.00

MACH = .600

ALPHAO	CN	CA	CLM	CY	CBL	CYN	CL	CD	CSL	CLN
6.000	.35904	.01017	-.03010	.05154	-.00731	.01477	.35601	.04765	-.00572	.01545
8.000	.46359	-.00220	-.02710	.05063	-.00514	.01518	.45938	.06234	-.00299	.01575
10.000	.57144	-.01612	-.02552	.04962	-.00247	.01580	.56556	.08335	.00031	.01599
12.000	.68337	-.03190	-.02020	.04763	.00030	.01682	.67507	.11028	.00379	.01639
14.000	.78230	-.03451	-.01510	.05028	-.00407	.01559	.76741	.15577	-.00018	.01611
16.000	.88158	-.03184	-.01421	.05259	-.00795	.01555	.85620	.21239	-.00335	.01714
18.000	.98447	-.02693	-.01670	.05115	-.00713	.01661	.94461	.27851	-.00165	.01800
GRADIENT	.05404	-.00701	.00156	-.00064	.00127	.00034	.05317	.01054	.00159	.00015

CA20 01 S1 ORBITER DATA (NGN003) (03 MAR 75)

REFERENCE DATA

SREF = 2690.0000 SQ.FT. XMRP = 1109.0000 IN.XO
LREF = 474.8100 IN. YMRP = .0000 IN.YO
BREF = 936.6800 IN. ZMRP = 375.0000 IN.ZO
SCALE = .0300

PARAMETRIC DATA

ELEVON = .000 AILRON = .000
BETAO = .000 PHI = .000

RN/L = 3.26 GRADIENT INTERVAL = .00/ 12.00

MACH = .600

ALPHAO	CN	CA	CLM	CY	CBL	CYN	CL	CD	CSL	CLN
6.000	.22778	.02027	.03932	-.00182	-.00092	-.00139	.22441	.04397	-.00106	-.00128
8.000	.33174	.00796	.04262	-.00214	-.00115	-.00094	.32740	.05405	-.00127	-.00077
10.000	.43866	-.00701	.04624	-.00179	-.00129	-.00066	.43341	.06930	-.00139	-.00042
12.000	.54925	-.02278	.05155	-.00280	-.00155	.00041	.54199	.09191	-.00143	.00072
14.000	.65444	-.02628	.05264	-.00059	-.00172	-.00057	.64136	.13283	-.00183	-.00023
16.000	.75960	-.02372	.05099	.00191	-.00208	-.00184	.73671	.16559	-.00250	-.00120
18.000	.87670	-.02022	.04344	.00123	-.00165	-.00114	.84003	.25169	-.00192	-.00059
GRADIENT	.05358	-.00721	.00202	-.00013	-.00010	.00028	.05294	.00795	-.00006	.00032

CA20 01 S1 ORBITER DATA (NGN009) (03 MAR 75)

REFERENCE DATA

SREF = 2690.0000 SQ.FT. XMRP = 1109.0000 IN.XO
LREF = 474.8100 IN. YMRP = .0000 IN.YO
BREF = 936.6800 IN. ZMRP = 375.0000 IN.ZO
SCALE = .0300

PARAMETRIC DATA

ELEVON = 5.000 AILRON = -10.000
BETAO = .000 PHI = .000

RN/L = 3.26 GRADIENT INTERVAL = .00/ 12.00

MACH = .600

ALPHAO	CN	CA	CLM	CY	CBL	CYN	CL	CD	CSL	CLN
6.000	.33647	.02440	-.01083	.04258	-.04611	-.00822	.33208	.05944	-.04672	-.00335
8.000	.44049	.01226	-.00725	.04452	-.04712	-.00810	.43449	.07344	-.04778	-.00146
10.000	.55401	-.00237	-.00692	.04623	-.04920	-.00725	.54601	.09387	-.04971	.00140
12.000	.67244	-.01650	-.00556	.04559	-.05107	-.00520	.66161	.12161	-.05103	.00554
14.000	.77084	-.02088	-.00107	.04558	-.04613	-.00546	.75299	.16823	-.04608	.00555
16.000	.85687	-.01531	.00448	.04741	-.03968	-.00742	.82789	.22147	-.04019	.00391
18.000	.97328	-.01141	-.00060	.05238	-.03959	-.00871	.92917	.26990	-.04035	.00395
GRADIENT	.05507	-.00718	.00091	.00054	-.00085	.00050	.05501	.01035	-.00074	.00148

CA20 01 S1 ORBITER DATA (NGN010) (03 MAR 75)

REFERENCE DATA

SREF = 2690.0000 SQ.FT. XMRP = 1109.0000 IN.XO
LREF = 474.8100 IN. YMRP = .0000 IN.YO
BREF = 936.6800 IN. ZMRP = 375.0000 IN.ZO
SCALE = .0300

PARAMETRIC DATA

ELEVON = 5.000 AILRON = .000
BETAO = .000 PHI = .000

RN/L = 1.92 GRADIENT INTERVAL = .00/ 12.00

MACH = .300

ALPHAO	CN	CA	CLM	CY	CBL	CYN	CL	CD	CSL	CLN
6.000	.32739	.01541	-.01160	-.00178	-.00155	-.00138	.32399	.04954	-.00169	-.00121
8.000	.42372	.00151	-.00897	-.00153	-.00184	-.00110	.41939	.06047	-.00198	-.00083
10.000	.51921	-.01295	-.00467	-.00121	-.00230	-.00065	.51357	.07741	-.00238	-.00025
12.000	.61417	-.02894	.00310	-.00105	-.00250	-.00025	.60676	.09939	-.00250	.00028
14.000	.71374	-.04559	.01056	-.00029	-.00234	-.00028	.70357	.12843	-.00234	.00030
16.000	.82261	-.06179	.01451	.00023	-.00200	-.00001	.80778	.16735	-.00193	.00054
18.000	.93911	-.07926	.01498	-.00034	-.00214	.00039	.91764	.21402	-.00192	.00103
GRADIENT	.04779	-.00737	.00242	.00013	-.00017	.00019	.04713	.00832	-.00014	.00025

RN/L = 3.25 GRADIENT INTERVAL = .00/ 12.00

MACH = .600

ALPHAO	CN	CA	CLM	CY	CBL	CYN	CL	CD	CSL	CLN
6.000	.32827	.02289	-.00463	-.00122	-.00142	-.00145	.32408	.05708	-.00156	-.00129
8.000	.43472	.00961	-.00341	-.00153	-.00171	-.00102	.42915	.07002	-.00184	-.00077
10.000	.53837	-.00495	.00194	-.00126	-.00188	-.00084	.53105	.08861	-.00200	-.00050
12.000	.65321	-.02063	.00671	-.00222	-.00159	.00020	.64322	.11563	-.00151	.00053
14.000	.75344	-.02207	.00891	.00101	-.00296	-.00112	.73640	.16086	-.00314	-.00037
16.000	.85095	-.01722	.00818	.00361	-.00310	-.00224	.82273	.21800	-.00360	-.00130
18.000	.97268	-.01450	-.00087	.00214	-.00202	-.00134	.92955	.28678	-.00233	-.00065
GRADIENT	.05392	-.00726	.00197	-.00014	-.00003	.00026	.05297	.00971	.00000	.00029

CA20 01 SI ORBITER DATA (NGN011) (03 MAR 75)

REFERENCE DATA

SREF = 2690.0000 SQ.FT. XMRP = 1109.0000 IN.XO
LREF = 474.8100 IN. YMRP = .0000 IN.YO
BREF = 935.6900 IN. ZMRP = 375.0000 IN.ZO
SCALE = .0300

PARAMETRIC DATA

ELEVON = 10.000 AILRON = .000
BETAO = .000 PHI = .000

RN/L = 3.27 GRADIENT INTERVAL = .00/ 12.00

MACH = .600

ALPHAO	CN	CA	CLM	CY	CBL	CYN	CL	CD	CSL	CLN
6.000	.43141	.03032	-.05043	-.00163	-.00134	-.00150	.42589	.07525	-.00149	-.00135
8.000	.53893	.01741	-.04760	-.00157	-.00132	-.00127	.52839	.09184	-.00149	-.00107
10.000	.64350	.00352	-.04330	-.00145	-.00152	-.00089	.63311	.11520	-.00165	-.00061
12.000	.76410	-.01112	-.04068	-.00155	-.00168	-.00028	.74972	.14799	-.00170	.00008
14.000	.85139	-.01357	-.03534	-.00005	-.00165	-.00065	.83907	.19522	-.00181	-.00043
16.000	.94765	-.00676	-.03433	.00212	-.00207	-.00162	.91301	.25477	-.00243	-.00059
18.000	1.06533	-.00293	-.04448	.00216	-.00205	-.00139	1.01758	.32750	-.00238	-.00069
GRADIENT	.05528	-.00691	.00169	.00002	-.00006	.00020	.05391	.01208	-.00004	.00024

CA30 01 SI ORBITER DATA (NGN012) (03 MAR 75)

REFERENCE DATA

SREF = 2690.0000 SQ.FT. XMRP = 1109.0000 IN.XO
LREF = 474.8100 IN. YMRP = .0000 IN.YO
BREF = 935.6900 IN. ZMRP = 375.0000 IN.ZO
SCALE = .0300

PARAMETRIC DATA

ELEVON = 5.000 AILRON = .000
ALPHAO = 10.000 BETAO = -5.000
PHI = .000

RN/L = 3.33 GRADIENT INTERVAL = .00/ 12.00

MACH = .600

DZ	CN	CA	CLM	CY	CBL	CYN	CL	CD	CSL	CLN
.000	.60655	-.02015	-.02512	.05010	-.00134	.01609	.60000	.09117	.00163	.01607
3.000	.60502	-.02003	-.02505	.05036	-.00142	.01616	.59947	.09099	.00165	.01615
7.500	.60352	-.01982	-.02496	.05078	-.00153	.01619	.59697	.09091	.00145	.01620
15.000	.60254	-.01941	-.02561	.05171	-.00161	.01629	.59593	.09112	.00139	.01631
30.000	.59899	-.01857	-.02831	.05329	-.00183	.01565	.59230	.09119	.00124	.01670
45.000	.59363	-.01743	-.02878	.05430	-.00261	.01675	.58693	.09126	.00049	.01654
60.000	.58779	-.01615	-.02822	.05563	-.00341	.01714	.58085	.09140	-.00023	.01747
GRADIENT	-.00040	.00004	.00002	.00009	-.00003	.00001	-.00040	-.00003	-.00002	.00002

ORIGINAL PAGE IS
OF POOR QUALITY

CA20 01 SI ORBITER DATA (NGN013) (03 MAR 75)

REFERENCE DATA

SREF = 2690.0000 SQ.FT. XMRP = 1109.0000 IN.XO
LREF = 474.8100 IN. YMRP = .0000 IN.YO
BREF = 936.6800 IN. ZMRP = 375.0000 IN.ZO
SCALE = .0300

PARAMETRIC DATA

ELEVON = 5.000 AILRON = .000
ALPHAO = 14.000 BETAO = -5.000
PHI = .000

RN/L = 3.30 GRADIENT INTERVAL = .00/ 12.00

MACH = .600

DZ	CN	CA	CLM	CY	CBL	CYN	CL	CD	CSL	CLN
.000	.80819	-.04375	-.01291	.05051	-.00373	.01131	.79264	.16374	-.00072	.01189
3.000	.81441	-.03942	-.01389	.05274	-.00503	.01289	.79752	.16963	-.00157	.01375
7.500	.82040	-.03495	-.01508	.05506	-.00636	.01451	.80215	.17560	-.00245	.01565
15.000	.82356	-.03163	-.01647	.05685	-.00732	.01567	.80435	.17966	-.00307	.01702
30.000	.81821	-.03204	-.01826	.05690	-.00705	.01540	.79932	.17773	-.00289	.01669
45.000	.81377	-.03167	-.01939	.05730	-.00717	.01549	.79493	.17693	-.00298	.01681
60.000	.80857	-.03177	-.01849	.05953	-.00719	.01594	.79004	.17548	-.00289	.01725
GRADIENT	.00160	.00116	-.00029	.00060	-.00035	.00042	.00125	.00156	-.00023	.00050

CA20 01 SI ORBITER DATA (NGN014) (03 MAR 75)

REFERENCE DATA

SREF = 2690.0000 SQ.FT. XMRP = 1109.0000 IN.XO
LREF = 474.8100 IN. YMRP = .0000 IN.YO
BREF = 936.6800 IN. ZMRP = 375.0000 IN.ZO
SCALE = .0300

PARAMETRIC DATA

ELEVON = 5.000 AILRON = .000
ALPHAO = 7.500 PHI = -90.000

RN/L = 3.29 GRADIENT INTERVAL = -5.00/ 5.00

MACH = .600

BETAO	CN	CA	CLM	CY	CBL	CYN	CL	CD	CSL	CLN
-15.000	.44368	-.00243	-.02796	.15029	-.01132	.04376	.44013	.05607	-.00546	.04487
-10.000	.45318	.00021	-.02235	.09755	-.00668	.03157	.44918	.06001	-.00186	.03209
-7.500	.45935	.00008	-.02259	.07457	-.00442	.02378	.45532	.06072	-.00124	.02416
-5.000	.47243	-.00327	-.02980	.04969	-.00334	.01691	.46873	.05912	-.00109	.01710
-2.500	.46994	-.00378	-.02403	.02522	-.00202	.00944	.46533	.05921	-.00075	.00953
.000	.44667	.00654	-.00418	.00180	-.00002	.00167	.44187	.06561	.00020	.00166
2.500	.46252	-.00110	-.01984	-.02084	.00131	-.00677	.45861	.06006	.00040	-.00689
GRADIENT	-.00208	.00067	.00199	-.00940	.00064	-.00314	-.00215	.00041	.00022	-.00320

CA20 02 SI ORBITER DATA (NGN015) (03 MAR 75)

REFERENCE DATA

SREF = 2690.0000 SQ.FT. XMRP = 1109.0000 IN.XO
LREF = 474.8100 IN. YMRP = .0000 IN.YO
BREF = 936.6800 IN. ZMRP = 375.0000 IN.ZO
SCALE = .0300

PARAMETRIC DATA

ELEVON = 5.000 AILRON = .000
BETAO = -5.000 PHI = .000

RN/L = 3.38 GRADIENT INTERVAL = .00/ 12.00

MACH = .600

ALPHAO	CN	CA	CLM	CY	CBL	CYN	CL	CD	CSL	CLN
6.000	.33749	.04376	-.00624	.05754	-.00483	.01031	.33107	.07890	-.00372	.01076
8.000	.43947	.03191	-.00129	.05732	-.00278	.01004	.43075	.09277	-.00135	.01033
10.000	.54352	.01835	.00417	.05754	-.00023	.00994	.53207	.11245	.00150	.00992
12.000	.65428	.00250	.01012	.05544	.00283	.01086	.63946	.13847	.00503	.01003
14.000	.75444	-.00020	.01557	.05994	-.00175	.00929	.73207	.18232	.00055	.00944
16.000	.84678	.00605	.02017	.06396	-.00669	.00843	.81231	.23023	-.00411	.00995
18.000	.95179	.01097	.02102	.05424	-.00484	.00904	.90182	.30456	-.00181	.01009
GRADIENT	.05272	-.00697	.00273	-.00030	.00128	.00008	.05133	.00994	.00146	-.00013

CA20 02 SI ORBITER DATA (NGN016) (03 MAR 75)

REFERENCE DATA

SREF = 2690.0000 SQ.FT. XMRP = 1109.0000 IN.XO
LREF = 474.8100 IN. YMRP = .0000 IN.YO
BREF = 936.6800 IN. ZMRP = 375.0000 IN.ZO
SCALE = .0300

PARAMETRIC DATA

ELEVON = .000 AILRON = .000
BETAO = .000 PHI = .000

RN/L = 3.28 GRADIENT INTERVAL = .00/ 12.00

MACH = .600

ALPHAO	CN	CA	CLM	CY	CBL	CYN	CL	CD	CSL	CLN
6.000	.23975	.03759	.03978	-.00320	-.00112	-.00035	.23351	.06234	-.00115	-.00023
8.000	.34180	.02472	.04203	-.00319	-.00143	-.00023	.33503	.07205	-.00145	-.00002
10.000	.44708	.01111	.04709	-.00261	-.00160	-.00011	.43836	.08857	-.00160	.00017
12.000	.55578	-.00271	.05465	-.00369	-.00183	.00103	.54420	.11290	-.00158	.00139
14.000	.65660	-.00339	.05991	-.00140	-.00189	.00005	.63792	.15556	-.00182	.00050
16.000	.75657	.00179	.06294	.00068	-.00257	-.00079	.72696	.21029	-.00269	-.00005
18.000	.85575	.00807	.06109	-.00008	-.00284	.00005	.82098	.27520	-.00268	.00093
GRADIENT	.05282	-.00573	.00263	-.00004	-.00011	.00021	.05177	.00641	-.00007	.00025

CA20 02 S1 ORBITER DATA (NGN017) (03 MAR 75)

REFERENCE DATA

SREF = 2690.0000 SQ.FT. XMRP = 1109.0000 IN.XO
LREF = 474.8100 IN. YMRP = .0000 IN.YO
BREF = 936.6900 IN. ZMRP = 375.0000 IN.ZO
SCALE = .0300

PARAMETRIC DATA

ELEVON = 5.000 AILRON = -10.000
BETAO = .000 PHI = .000

RN/L = 3.28 GRADIENT INTERVAL = .00/ 12.00

MACH = .600

ALPHAO	CN	CA	CLM	CY	CBL	CYN	CL	CD	CSL	CLN
6.000	.33152	.05221	-.00387	.03049	-.04519	-.00438	.32424	.08657	-.04540	.00037
8.000	.43514	.03958	-.00057	.03209	-.04576	-.00398	.42539	.09975	-.04587	.00243
10.000	.54643	.02659	.00163	.03470	-.04781	-.00345	.53351	.12108	-.04768	.00491
12.000	.65915	.01291	.00781	.03485	-.04959	-.00213	.64206	.14967	-.04695	.00823
14.000	.75513	.01304	.01480	.03565	-.04506	-.00222	.72955	.19533	-.04426	.00875
16.000	.84153	.02127	.02050	.03458	-.03935	-.00241	.80307	.25240	-.03849	.00654
18.000	.95110	.02852	.01858	.03472	-.03944	-.00169	.89574	.32103	-.03903	.01059
GRADIENT	.05471	-.00654	.00186	.00078	-.00076	.00036	.05308	.01053	-.00062	.00130

CA20 02 S1 ORBITER DATA (NGN018) (03 MAR 75)

REFERENCE DATA

SREF = 2690.0000 SQ.FT. XMRP = 1109.0000 IN.XO
LREF = 474.8100 IN. YMRP = .0000 IN.YO
BREF = 936.6900 IN. ZMRP = 375.0000 IN.ZO
SCALE = .0300

PARAMETRIC DATA

ELEVON = 5.000 AILRON = .000
BETAO = .000 PHI = .000

RN/L = 3.28 GRADIENT INTERVAL = .00/ 12.00

MACH = .600

ALPHAO	CN	CA	CLM	CY	CBL	CYN	CL	CD	CSL	CLN
6.000	.33856	.04096	-.00528	-.00297	-.00184	-.00024	.33242	.07613	-.00186	-.00005
8.000	.44347	.02805	-.00217	-.00333	-.00204	.00006	.43525	.08950	-.00201	.00035
10.000	.54601	.01429	.00396	-.00276	-.00185	.00013	.53523	.10869	-.00180	.00045
12.000	.65883	.00046	.01073	-.00365	-.00190	.00104	.64434	.13743	-.00164	.00141
14.000	.75432	.00240	.01644	-.00073	-.00299	-.00012	.73133	.18482	-.00293	.00080
16.000	.84402	.00829	.02324	.00031	-.00291	-.00051	.80904	.24061	-.00294	.00031
18.000	.95499	.01501	.02105	-.00013	-.00363	.00052	.90362	.30938	-.00329	.00162
GRADIENT	.05317	-.00576	.00271	-.00007	.00000	.00019	.05179	.01016	.00004	.00022

CA20 02 SI ORBITER DATA (NGN019) (05 SEP 75)

REFERENCE DATA

SREF = 2690.0000 SQ.FT. XMRP = 1109.0000 IN.XO
LREF = 474.8100 IN. YMRP = .0000 IN.YO
BREF = 936.6900 IN. ZMRP = 375.0000 IN.ZO
SCALE = .0300

PARAMETRIC DATA

ELEVON = 10.000 AILRON = .000
BETAO = .000 PHI = .000

RN/L = 3.26 GRADIENT INTERVAL = .00/ 12.00

MACH = .600

ALPHAO	CN	CA	CLM	CY	CBL	CYN	CL	CD	CSL	CLN
6.000	.48089	.04947	-.05095	-.00254	-.00177	-.00023	.43340	.09529	-.00178	-.00004
8.000	.54430	.03675	-.04705	-.00233	-.00181	-.00009	.53389	.11215	-.00180	.00016
10.000	.65315	.02313	-.04359	-.00235	-.00187	.00010	.63922	.13620	-.00182	.00042
12.000	.77146	.01023	-.03900	-.00287	-.00187	.00078	.75248	.17040	-.00167	.00115
14.000	.88179	.01235	-.03026	-.00035	-.00217	.00009	.83320	.22047	-.00208	.00061
16.000	.94092	.02269	-.02198	.00139	-.00226	-.00056	.89921	.28116	-.00232	.00008
18.000	1.05590	.03061	-.02571	.00063	-.00213	.00005	.99571	.35571	-.00201	.00071
GRADIENT	.05501	-.00657	.00197	-.00005	-.00002	.00016	.05313	.01247	.00002	.00019

CA20 03 S2 ORBITER DATA (NGN020) (03 MAR 75)

REFERENCE DATA

SREF = 2690.0000 SQ.FT. XMRP = 1109.0000 IN.XO
LREF = 474.8100 IN. YMRP = .0000 IN.YO
BREF = 936.6900 IN. ZMRP = 375.0000 IN.ZO
SCALE = .0300

PARAMETRIC DATA

ELEVON = 5.000 AILRON = .000
BETAO = -5.000 PHI = .000
RUDDER = .000

RN/L = 1.92 GRADIENT INTERVAL = .00/ 12.00

MACH = .300

ALPHAO	CN	CA	CLM	CY	CBL	CYN	CL	CD	CSL	CLN
6.000	.35822	.01334	-.01584	.12064	.00965	-.00415	.35287	.05051	.00916	-.00513
8.000	.45415	.00110	-.01356	.11877	.01080	-.00327	.44958	.06429	.01024	-.00474
10.000	.55275	-.01309	-.01004	.11589	.01298	-.00244	.54653	.08309	.01236	-.00465
12.000	.65111	-.02889	-.00687	.11385	.01520	-.00232	.64289	.10711	.01439	-.00543
14.000	.75102	-.04463	.00159	.11274	.01559	-.00194	.73951	.13838	.01465	-.00566
16.000	.85984	-.06114	.00494	.10979	.01680	-.00137	.84243	.17796	.01577	-.00595
18.000	.96635	-.08033	.00992	.10524	.01650	-.00014	.94388	.22222	.01765	-.00589
GRADIENT	.04916	-.00705	.00152	-.00116	.00094	.00032	.04836	.00943	.00089	-.00004

CA20 03 S2 ORBITER DATA (NGN020) (03 MAR 75)

REFERENCE DATA

SREF = 2690.0000 SQ.FT. XMRP = 1109.0000 IN.XO
LREF = 474.8100 IN. YMRP = .0000 IN.YO
BREF = 936.6800 IN. ZMRP = 375.0000 IN.ZO
SCALE = .0300

PARAMETRIC DATA

ELEVON = 5.000 AILRON = .000
BETAO = -5.000 PHI = .000
RUDDER = .000

RN/L = 3.30 GRADIENT INTERVAL = .00/ 12.00

MACH = .600

ALPHAO	CN	CA	CLM	CY	CBL	CYN	CL	CD	CSL	CLN
6.000	.38186	.01291	-.02315	.13135	.01187	-.00671	.37842	.05276	.01110	-.00791
8.000	.48669	.00075	-.02060	.12849	.01367	-.00607	.48184	.06847	.01269	-.00792
10.000	.59580	-.01282	-.02005	.12363	.01617	-.00498	.58897	.09083	.01506	-.00771
12.000	.71004	-.02692	-.01634	.12061	.01849	-.00438	.70012	.12129	.01718	-.00813
14.000	.81232	-.02845	-.01354	.12431	.01354	-.00653	.79507	.16891	.01155	-.00662
16.000	.90423	-.02025	-.01572	.12284	.01150	-.00385	.87479	.22978	.00916	-.00976
18.000	1.01826	-.01794	-.02228	.11930	.01088	-.00637	.97397	.29759	.00838	-.00942
GRADIENT	.05468	-.00665	.00105	-.00185	.00112	.00040	.05361	.01140	.00103	-.00002

CA20 03 S2 ORBITER DATA (NGN021) (03 MAR 75)

REFERENCE DATA

SREF = 2690.0000 SQ.FT. XMRP = 1109.0000 IN.XO
LREF = 474.8100 IN. YMRP = .0000 IN.YO
BREF = 936.6800 IN. ZMRP = 375.0000 IN.ZO
SCALE = .0300

PARAMETRIC DATA

ELEVON = 5.000 AILRON = .000
BETAO = .000 PHI = .000
RUDDER = .000

RN/L = 1.93 GRADIENT INTERVAL = .00/ 12.00

MACH = .300

ALPHAO	CN	CA	CLM	CY	CBL	CYN	CL	CD	CSL	CLN
6.000	.34568	.01700	-.00765	.00939	-.00146	-.00098	.34201	.05304	-.00156	-.00082
8.000	.44661	.00382	-.00814	.00964	-.00213	-.00083	.44173	.06593	-.00223	-.00053
10.000	.54745	-.01117	-.00614	.01022	-.00254	-.00078	.54107	.08406	-.00263	-.00032
12.000	.64342	-.02682	.00115	.00959	-.00205	-.00048	.63493	.10754	-.00210	-.00004
14.000	.74404	-.04301	.00585	.00911	-.00192	-.00009	.73234	.13827	-.00188	.00037
16.000	.85192	-.06801	.00935	.00870	-.00177	.00037	.83546	.17714	-.00160	.00064
18.000	.97419	-.07954	.01042	.00660	-.00151	.00082	.95112	.22530	-.00118	.00125
GRADIENT	.04970	-.00732	.00142	.00006	-.00011	.00008	.04891	.00908	-.00010	.00013

CA20 03 S2 ORBITER DATA (NGN021) (03 MAR 75)

REFERENCE DATA

SREF = 2690.0000 SQ.FT. XMRP = 1109.0000 IN.XO
LREF = 474.8100 IN. YMRP = .0000 IN.YO
BREF = 936.6800 IN. ZMRP = 375.0000 IN.ZO
SCALE = .0300

PARAMETRIC DATA

ELEVON = 5.000 AILRON = .000
BETAO = .000 PHI = .000
RUDDER = .000

RN/L = 2.94 GRADIENT INTERVAL = .00/ 12.00

MACH = .500

ALPHAO	CN	CA	CLM	CY	CBL	CYN	CL	CD	CSL	CLN
6.000	.35926	.01657	-.01041	.00854	-.00145	-.00099	.35556	.05404	-.00154	-.00083
8.000	.46415	.00325	-.01139	.00967	-.00185	-.00083	.45918	.06781	-.00195	-.00057
10.000	.57032	-.01172	-.00876	.00898	-.00191	-.00054	.56369	.08749	-.00198	-.00020
12.000	.66592	-.02736	-.00206	.00935	-.00135	-.00056	.65096	.11252	-.00144	-.00027
14.000	.77952	-.04345	.00355	.00791	-.00132	.00004	.76897	.14642	-.00127	.00036
16.000	.89518	-.04397	.00018	.01519	-.00416	-.00376	.87263	.20448	-.00504	-.00247
18.000	.99835	-.03999	-.00257	.01217	-.00402	-.00200	.96154	.27144	-.00445	-.00065
GRADIENT	.05191	-.00734	.00138	.00009	.00001	.00008	.05104	.00976	.00002	.00010

RN/L = 3.30 GRADIENT INTERVAL = .00/ 12.00

MACH = .600

ALPHAO	CN	CA	CLM	CY	CBL	CYN	CL	CD	CSL	CLN
6.000	.37192	.01757	-.01321	.00891	-.00159	-.00101	.35804	.05535	-.00169	-.00084
8.000	.48133	.00439	-.01401	.00887	-.00146	-.00086	.47604	.07133	-.00157	-.00055
10.000	.58014	-.01044	-.01102	.00831	-.00071	-.00050	.58299	.09219	-.00078	-.00037
12.000	.70119	-.02364	-.00545	.00663	-.00100	.00043	.69092	.12247	-.00089	.00063
14.000	.78752	-.02061	-.00330	.01077	-.00242	-.00158	.77882	.17294	-.00273	-.00095
16.000	.69839	-.01811	-.00659	.01053	-.00289	-.00162	.87003	.23063	-.00332	-.00073
18.000	1.01633	-.01392	-.01634	.01024	-.00287	-.00114	.97089	.30082	-.00318	-.00017
GRADIENT	.05483	-.00695	.00131	-.00037	.00013	.00023	.05376	.01095	.00016	.00023

ORIGINAL PAGE IS
OF POOR QUALITY

CA20 03 S2 ORBITER DATA (NGN022) (03 MAR 75)

REFERENCE DATA

SREF = 2690.0000 SQ.FT. XMRP = 1109.0000 IN.XO
LREF = 474.8100 IN. YMRP = .0000 IN.YO
BREF = 936.6900 IN. ZMRP = 375.0000 IN.ZO
SCALE = .0300

PARAMETRIC DATA

ELEVON = 5.000 AILRON = .000
BETAO = .000 PHI = .000
RUDDER = .000

RN/L = 3.36 GRADIENT INTERVAL = .00/ 12.00

MACH = .600

ALPHAO	CN	CA	CLM	CY	CBL	CYN	CL	CD	CSL	CLN
6.000	.37005	.01742	-.01407	.00984	-.00124	-.00109	.36821	.05600	-.00135	-.00095
8.000	.48106	.00422	-.01501	.00968	-.00150	-.00087	.47579	.07113	-.00161	-.00065
10.000	.58592	-.00984	-.01126	.00957	-.00112	-.00056	.57873	.09205	-.00120	-.00036
12.000	.70149	-.02511	-.00466	.00704	-.00057	.00055	.69138	.12128	-.00044	.00066
14.000	.79703	-.02122	-.00369	.01092	-.00243	-.00134	.77849	.17223	-.00269	-.00071
16.000	.89962	-.01853	-.00631	.01160	-.00297	-.00168	.86988	.23015	-.00332	-.00080
18.000	1.01679	-.01395	-.01593	.01079	-.00289	-.00120	.97134	.30094	-.00311	-.00025
GRADIENT	.05496	-.00708	.00160	-.00043	.00012	.00026	.05392	.01084	.00016	.00026

CA20 03 S2 ORBITER DATA (NGN023) (03 MAR 75)

REFERENCE DATA

SREF = 2690.0000 SQ.FT. XMRP = 1109.0000 IN.XO
LREF = 474.8100 IN. YMRP = .0000 IN.YO
BREF = 936.6900 IN. ZMRP = 375.0000 IN.ZO
SCALE = .0300

PARAMETRIC DATA

ELEVON = 5.000 AILRON = .000
BETAO = .000 PHI = .000
RUDDER = 15.000

RN/L = 3.33 GRADIENT INTERVAL = .00/ 12.00

MACH = .600

ALPHAO	CN	CA	CLM	CY	CBL	CYN	CL	CD	CSL	CLN
6.000	.36136	.02682	-.00444	.04457	.00562	-.01572	.35657	.06445	.00394	-.01622
8.000	.47080	.01460	-.00527	.04578	.00562	-.01594	.46418	.07998	.00335	-.01657
10.000	.57499	-.00017	.00078	.04405	.00624	-.01556	.56628	.09967	.00345	-.01641
12.000	.68856	-.01506	.00553	.04230	.00632	-.01425	.67665	.12843	.00322	-.01525
14.000	.78941	-.01461	.00627	.04418	.00522	-.01549	.76950	.17680	.00131	-.01629
16.000	.89207	-.01031	.00213	.04564	.00422	-.01616	.86035	.23597	-.00039	-.01670
18.000	1.00003	-.00785	-.00774	.04366	.00593	-.01607	.95351	.30166	.00059	-.01708
GRADIENT	.05429	-.00702	.00180	-.00043	.00014	.00024	.05312	.01053	-.00010	.00015

CA20 05 S2 ORBITER DATA (NGN024) (03 MAR 75)

REFERENCE DATA

SREF = 2690.0000 SQ.FT. XMRP = 1109.0000 IN.XO
LREF = 474.8100 IN. YMRP = .0000 IN.YO
BREF = 935.6900 IN. ZMRP = 375.0000 IN.ZO
SCALE = .0300

PARAMETRIC DATA

ELEVON = 5.000 AILRON = .000
BETAO = -5.000 PHI = .000
RUDDER = .000

RN/L = 3.35 GRADIENT INTERVAL = .00/ 12.00

MACH = .600

ALPHAO	CN	CA	CLM	CY	CBL	CYN	CL	CD	CSL	CLN
6.000	.36540	.04583	-.00815	.12378	.01010	-.00723	.35961	.08377	.00939	-.00825
8.000	.46777	.03411	-.00356	.12069	.01188	-.00675	.45947	.09888	.01083	-.00934
10.000	.57401	.02011	.00130	.11876	.01465	-.00671	.56180	.11948	.01366	-.00915
12.000	.68785	.00598	.00604	.11567	.01736	-.00578	.67160	.14876	.01678	-.00924
14.000	.78974	.00521	.01009	.11881	.01221	-.00765	.76905	.16587	.00899	-.01039
16.000	.87657	.01622	.01417	.11943	.01001	-.00824	.83824	.25724	.00735	-.01068
18.000	.93559	.02175	.01287	.11811	.00938	-.00855	.93159	.32555	.00628	-.01103
GRADIENT	.05359	-.00659	.00237	-.00131	.00123	.00022	.05211	.01078	.00110	-.00019

CA20 05 S2 ORBITER DATA (NGN025) (03 MAR 75)

REFERENCE DATA

SREF = 2690.0000 SQ.FT. XMRP = 1109.0000 IN.XO
LREF = 474.8100 IN. YMRP = .0000 IN.YO
BREF = 935.6900 IN. ZMRP = 375.0000 IN.ZO
SCALE = .0300

PARAMETRIC DATA

ELEVON = 5.000 AILRON = .000
BETAO = .000 PHI = .000
RUDDER = .000

RN/L = 3.34 GRADIENT INTERVAL = .00/ 12.00

MACH = .600

ALPHAO	CN	CA	CLM	CY	CBL	CYN	CL	CD	CSL	CLN
6.000	.35830	.03938	-.00370	.00526	-.00195	-.00025	.35073	.07646	-.00196	-.00005
8.000	.46269	.02744	-.00059	.00449	-.00166	-.00005	.45436	.09156	-.00165	.00018
10.000	.55923	.01396	.00526	.00421	-.00152	.00004	.55423	.11180	-.00149	.00031
12.000	.67905	.00070	.01164	.00259	-.00137	.00107	.65407	.14187	-.00112	.00134
14.000	.77865	.00254	.01800	.00409	-.00207	.00038	.75492	.19084	-.00192	.00087
16.000	.86930	.01369	.02144	.00427	-.00180	-.00021	.83185	.25277	-.00179	.00030
18.000	.99108	.02163	.01734	.00339	-.00108	.00006	.93589	.32693	-.00101	.00039
GRADIENT	.05347	-.00648	.00259	-.00041	.00009	.00020	.05199	.01092	.00013	.00021

CA20 05 S2 ORBITER DATA (NGN026) (03 MAR 75)

REFERENCE DATA

SREF = 2690.0000 SQ.FT. XMRP = 1109.0000 IN.XO
LREF = 474.8100 IN. YMRP = .0000 IN.YO
BREF = 936.6800 IN. ZMRP = 375.0000 IN.ZO
SCALE = .0300

PARAMETRIC DATA

ELEVON = 5.000 AILRON = .000
BETAO = .000 PHI = .000
RUDDER = 15.000

RN/L = 3.33 GRADIENT INTERVAL = .00/ 12.00

MACH = .600

ALPHAO	CN	CA	CLM	CY	CBL	CYN	CL	CD	CSL	CLN
6.000	.35523	.05857	.00296	.04148	.00676	-.01442	.34716	.09538	.00521	-.01504
8.000	.46113	.04609	.00535	.04242	.00675	-.01454	.45023	.10982	.00466	-.01534
10.000	.56372	.03179	.01153	.04123	.00725	-.01436	.54963	.12919	.00465	-.01540
12.000	.67755	.01806	.01743	.03856	.00746	-.01316	.65899	.15853	.00456	-.01443
14.000	.77175	.02123	.02369	.04109	.00614	-.01442	.74369	.20731	.00247	-.01547
16.000	.85825	.02957	.02755	.04215	.00545	-.01485	.82646	.26775	.00115	-.01578
18.000	.97067	.03802	.02732	.03926	.00746	-.01418	.91142	.33612	.00271	-.01579
GRADIENT	.05348	-.00679	.00248	-.00050	.00013	.00020	.05174	.01044	-.00010	.00009

CA20 06 S2 ORBITER DATA (NGN027) (03 MAR 75)

REFERENCE DATA

SREF = 2690.0000 SQ.FT. XMRP = 1109.0000 IN.XO
LREF = 474.8100 IN. YMRP = .0000 IN.YO
BREF = 936.6800 IN. ZMRP = 375.0000 IN.ZO
SCALE = .0300

PARAMETRIC DATA

ELEVON = 5.000 AILRON = .000
BETAO = .000 PHI = .000
RUDDER = .000

RN/L = 3.31 GRADIENT INTERVAL = .00/ 12.00

MACH = .600

ALPHAO	CN	CA	CLM	CY	CBL	CYN	CL	CD	CSL	CLN
6.000	.34768	.05396	.00122	.00475	-.00192	-.00039	.34014	.09000	-.00195	-.00019
8.000	.45133	.04202	.00579	.00396	-.00215	-.00005	.44109	.10442	-.00213	.00025
10.000	.55396	.02809	.01236	.00312	-.00176	.00016	.54065	.12386	-.00171	.00047
12.000	.66606	.01450	.01957	.00093	-.00146	.00139	.64849	.15267	-.00114	.00165
14.000	.76044	.01680	.02765	.00264	-.00199	.00043	.73378	.20027	-.00182	.00093
16.000	.84817	.02693	.03569	.00371	-.00185	-.00020	.80789	.25967	-.00165	.00022
18.000	.95758	.03551	.03599	.00123	-.00109	.00039	.89943	.33063	-.00091	.00071
GRADIENT	.05289	-.00681	.00309	-.00061	.00009	.00028	.05123	.01037	.00014	.00029

CA20 07 S2 ORBITER DATA (NGN029) (03 MAR 75)

REFERENCE DATA

SREF = 2690.0000 SQ.FT. XMRP = 1109.0000 IN.XO
LREF = 474.8100 IN. YMRP = .0000 IN.YO
BREF = 936.6900 IN. ZMRP = 375.0000 IN.ZO
SCALE = .0300

PARAMETRIC DATA

ELEVON = 5.000 AILRON = .000
BETAO = .000 PHI = .000
RUDDER = .000

RN/L = 3.30 GRADIENT INTERVAL = .00/ 12.00

MACH = .600

ALPHAO	CN	CA	CLM	CY	CBL	CYN	CL	CD	CSL	CLN
6.000	.34626	.05328	.00005	.00428	-.00176	-.00005	.33879	.08919	-.00176	.00013
8.000	.44013	.04130	.00475	.00332	-.00198	.00020	.43901	.10340	-.00193	.00047
10.000	.55340	.02702	.01154	.00287	-.00158	.00031	.53932	.12253	-.00151	.00053
12.000	.65477	.01382	.01912	.00047	-.00133	.00155	.64741	.15153	-.00099	.00160
14.000	.75939	.01508	.02729	.00202	-.00210	.00070	.73318	.19934	-.00187	.00119
16.000	.84599	.02651	.03409	.00227	-.00193	-.00004	.80588	.25976	-.00167	.00049
18.000	.95567	.03519	.03522	.00075	-.00091	.00055	.89302	.32878	-.00059	.00022
GRADIENT	.05254	-.00686	.00320	-.00059	.00008	.00025	.05131	.01031	.00014	.00026

CA20 08 S2 ORBITER DATA (NGN029) (03 MAR 75)

REFERENCE DATA

SREF = 2690.0000 SQ.FT. XMRP = 1109.0000 IN.XO
LREF = 474.8100 IN. YMRP = .0000 IN.YO
BREF = 936.6900 IN. ZMRP = 375.0000 IN.ZO
SCALE = .0300

PARAMETRIC DATA

ELEVON = 5.000 AILRON = .000
BETAO = .000 PHI = .000
RUDDER = .000

RN/L = 3.30 GRADIENT INTERVAL = .00/ 12.00

MACH = .600

ALPHAO	CN	CA	CLM	CY	CBL	CYN	CL	CD	CSL	CLN
6.000	.28435	.06684	.01901	.00069	-.00226	-.00003	.28575	.09724	-.00225	.00020
8.000	.39466	.05505	.02353	.00078	-.00245	-.00015	.39315	.10944	-.00245	.00020
10.000	.49616	.04092	.03067	.00048	-.00194	.00008	.48152	.12645	-.00198	.00042
12.000	.60427	.02592	.03965	-.00245	-.00180	.00142	.59570	.15089	-.00146	.00176
14.000	.68890	.02806	.05060	.00003	-.00226	-.00000	.69165	.19359	-.00220	.00055
16.000	.77272	.03057	.06240	-.00019	-.00156	.00028	.73436	.24237	-.00142	.00069
18.000	.82174	.05162	.07467	.01597	-.00286	-.00023	.76557	.30302	-.00526	-.00394
GRADIENT	.05156	-.00686	.00345	-.00049	.00009	.00023	.04991	.00690	.00015	.00064

CA20 08 S2 ORBITER DATA (NGN030) (03 MAR 75)

REFERENCE DATA

SREF = 2690.0000 SQ.FT. XMRP = 1109.0000 IN.XO
LREF = 474.8100 IN. YMRP = .0000 IN.YO
BREF = 936.6800 IN. ZMRP = 375.0000 IN.ZO
SCALE = .0300

PARAMETRIC DATA

ELEVON = 5.000 AILRON = .000
BETAO = .000 PHI = .000
RUDDER = .000

RN/L = 3.33 GRADIENT INTERVAL = .00/ 12.00

MACH = .600

ALPHAO	CN	CA	CLM	CY	CBL	CYN	CL	CD	CSL	CLN
6.000	.30171	.06412	.01684	.00792	-.00236	-.00034	.29336	.09531	-.00239	-.00009
8.000	.39910	.05266	.02232	.00526	-.00241	.00003	.38789	.10769	-.00238	.00037
10.000	.49914	.03829	.03015	.00545	-.00185	.00006	.48491	.12438	-.00181	.00038
12.000	.60437	.02558	.03945	.00463	-.00204	.00080	.595 4	.15067	-.00183	.00121
14.000	.69106	.01483	.04970	.00696	-.00241	-.00008	.65595	.18157	-.00236	.00051
16.000	.76933	.06659	.06117	.00821	-.00276	-.00090	.72117	.27607	-.00290	-.00011
18.000	.85473	-.08671	.06454	.00657	-.00190	-.00059	.83969	.18166	-.00198	.00003
GRADIENT	.05040	-.00650	.00378	-.00023	.00008	.00017	.04872	.00914	.00011	.00020

CA20 08 S2 ORBITER DATA (NGN031) (03 MAR 75)

REFERENCE DATA

SREF = 2690.0000 SQ.FT. XMRP = 1109.0000 IN.XO
LREF = 474.8100 IN. YMRP = .0000 IN.YO
BREF = 936.6800 IN. ZMRP = 375.0000 IN.ZO
SCALE = .0300

PARAMETRIC DATA

ELEVON = 5.000 AILRON = .000
BETAO = .000 PHI = .000
RUDDER = .000

RN/L = 3.29 GRADIENT INTERVAL = .00/ 12.00

MACH = .600

ALPHAO	CN	CA	CLM	CY	CBL	CYN	CL	CD	CSL	CLN
6.000	.30008	-.06608	.01371	.00720	-.00226	-.00026	.30535	-.03435	-.00227	-.00002
8.000	.39743	-.02581	.02092	.00568	-.00241	.00025	.39716	.02975	-.00235	.00059
10.000	.49865	-.03011	.02777	.00594	-.00194	.00006	.49830	.05694	-.00190	.00040
12.000	.60536	-.02636	.03770	.00448	-.00216	.00015	.59761	.10008	-.00191	.00138
14.000	.69123	-.02315	.04872	.00712	-.00267	-.00015	.67630	.14476	-.00263	.00059
16.000	.76932	-.05771	.05774	.00989	-.00323	-.00103	.75542	.15557	-.00339	-.00010
18.000	.85458	-.08783	.06600	.00748	-.00133	-.00064	.83969	.18055	-.00146	-.00020
GRADIENT	.05085	.00574	.00394	-.00039	.00004	.00017	.04880	.02192	.00008	.00020

CA20 09 S2 ORBITER DATA (NGN032) (03 MAR 75)

REFERENCE DATA

SREF = 2690.0000 SQ.FT. XMRP = 1103.0000 IN.XO
LREF = 474.8100 IN. YMRP = .0000 IN.YO
BREF = 936.6800 IN. ZMRP = 375.0000 IN.ZO
SCALE = .0300

PARAMETRIC DATA

ELEVON = 5.000 AILRON = .000
BETAO = .000 PHI = .000
RUDDER = .000

RN/L = 3.31 GRADIENT INTERVAL = .00/ 12.00

MACH = .600

ALPHAO	CN	CA	CLM	CY	CBL	CYN	CL	CD	CSL	CLN
6.000	.29483	.06532	.02056	.00573	-.00227	.00052	.28539	.09579	-.00220	.00075
8.000	.39661	.05353	.02586	.00607	-.00219	.00078	.38530	.10221	-.00206	.00108
10.000	.49751	.03955	.03392	.00699	-.00187	.00075	.48308	.12534	-.00171	.00106
12.000	.60364	.02484	.04408	.00485	-.00179	.00165	.58528	.14980	-.00141	.00199
14.000	.68974	.02626	.05480	.00700	-.00239	.00076	.66290	.19234	-.00213	.00132
16.000	.76960	.03366	.06624	.00802	-.00326	.00031	.73051	.24449	-.00304	.00120
18.000	.85903	.04048	.07262	.00511	-.00260	.00139	.80448	.30395	-.00204	.00212
GRADIENT	.05137	-.00677	.00393	-.00009	.00009	.00017	.04972	.00896	.00014	.00018

CA20 09 S2 ORBITER DATA (NGN033) (03 MAR 75)

REFERENCE DATA

SREF = 2690.0000 SQ.FT. XMRP = 1109.0000 IN.XO
LREF = 474.8100 IN. YMRP = .0000 IN.YO
BREF = 936.6800 IN. ZMRP = 375.0000 IN.ZO
SCALE = .0300

PARAMETRIC DATA

ELEVON = 5.000 AILRON = .000
BETAO = -5.000 PHI = .000

RN/L = 3.34 GRADIENT INTERVAL = .00/ 12.00

MACH = .600

ALPHAO	CN	CA	CLM	CY	CBL	CYN	CL	CD	CSL	CLN
6.000	.37578	.04146	-.01007	.06809	-.00121	.01173	.36939	.08051	.00002	.01179
8.000	.47872	.03019	-.00501	.06806	.00093	.01129	.46986	.09552	.00249	.01105
10.000	.59434	.01765	-.00015	.06790	.00372	.01111	.57240	.11885	.00559	.01029
12.000	.69821	.00431	.00476	.06530	.00542	.01184	.69205	.14939	.00874	.01024
14.000	.78881	.00524	.00910	.06840	.00028	.01025	.77382	.19833	.00276	.00988
16.000	.88372	.01830	.01194	.06785	-.00169	.01049	.84444	.26118	.00126	.01055
18.000	.99533	.02232	.01220	.06869	-.00282	.00966	.93972	.32880	.00031	.01006
GRADIENT	.05364	-.00620	.00247	-.00043	.00128	.00001	.05203	.01145	.00146	-.00027

CA20 747/1 01 SI ORBITER DATA (NGN037) (03 MAR 75)

REFERENCE DATA

SREF = 2690.0000 SQ.FT. XMRP = 1109.0000 IN.XO
LREF = 474.8100 IN. YMRP = .0000 IN.YO
BREF = 936.6800 IN. ZMRP = 375.0000 IN.ZO
SCALE = .0300

PARAMETRIC DATA

ALPHAC = 4.000 BETAC = .000
ELV-IB = .000 ELV-OB = 3.000
ELEVON = 5.000 BETAO = .000
PHI = .000 DX = .000
DY = .000 DZ = 7.500

RN/L = 3.29 GRADIENT INTERVAL = -1.00/ 4.00

MACH = .600

ALPHAO	CN	CA	CLM	CY	CBL	CYN	CL	CD	CSL	CLN
6.000	.15151	.02875	.02211	-.00145	-.00211	-.00131	.14768	.04443	-.00223	-.00108
8.000	.27246	.01872	.03036	-.00182	-.00269	-.00074	.26721	.05546	-.00277	-.00036
10.000	.40598	.00557	.04039	-.00148	-.00257	-.00062	.39885	.07598	-.00264	-.00017
12.000	.52647	-.01033	.04917	-.00231	-.00244	.00016	.51711	.09936	-.00235	.00067
14.000	.64374	-.01753	.05533	-.00254	-.00149	.00060	.62886	.13873	-.00130	.00095
16.000	.76119	-.01741	.05699	-.00050	-.00251	-.00018	.73650	.19308	-.00246	.00052
18.000	.88797	-.01429	.04880	.00029	-.00291	-.00052	.84892	.26081	-.00293	.00041
GRADIENT	.00000	.00000	.00000	.00000	.00000	.00000	.00000	.00000	.00000	.00000

CA20 747/1 01 SI ORBITER DATA (NGN038) (03 MAR 75)

REFERENCE DATA

SREF = 2690.0000 SQ.FT. XMRP = 1109.0000 IN.XO
LREF = 474.8100 IN. YMRP = .0000 IN.YO
BREF = 936.6800 IN. ZMRP = 375.0000 IN.ZO
SCALE = .0300

PARAMETRIC DATA

ALPHAC = 4.000 ELV-IB = .000
ELV-OB = 3.000 ELEVON = 5.000
ALPHAO = 10.000 BETAO = .000
PHI = .000 DX = .000
DY = .000 DZ = 7.500

RN/L = 3.33 GRADIENT INTERVAL = -5.00/ 5.00

MACH = .600

BETA	CN	CA	CLM	CY	CBL	CYN	CL	CD	CSL	CLN
-10.000	.41612	.00344	.03891	-.01603	.00576	.00534	.40865	.07859	.00663	.00422
-7.000	.42184	.00351	.03820	-.01195	.00294	.00300	.41426	.07970	.00344	.00242
-5.000	.42283	.00312	.03879	-.00893	.00124	.00166	.41530	.07950	.00152	.00141
-3.000	.42319	.00282	.04010	-.00609	-.00033	.00065	.41570	.07930	-.00021	.00070
-2.000	.42321	.00291	.04050	-.00461	-.00117	.00030	.41571	.07940	-.00109	.00050
-1.000	.42272	.00298	.04090	-.00299	-.00193	-.00005	.41521	.07940	-.00191	.00030
.000	.42472	.00234	.04010	-.00121	-.00273	-.00060	.41730	.07910	-.00279	-.00010
1.000	.42350	.00275	.04059	-.00022	-.00340	-.00083	.41602	.07930	-.00349	-.00020
2.000	.42247	.00323	.04139	.00138	-.00413	-.00126	.41491	.07950	-.00429	-.00050
3.000	.42118	.00358	.04230	.00271	-.00490	-.00161	.41359	.07970	-.00511	-.00070
5.000	.42078	.00357	.04129	.00562	-.00647	-.00252	.41320	.07960	-.00681	-.00131
10.000	.41251	.00409	.04211	.01181	-.01132	-.00595	.40499	.07660	-.01221	-.00381
GRADIENT	-.00022	.00006	.00026	.00146	-.00076	-.00040	-.00023	.00003	-.00083	-.00026

CA20 747/1 01 S1 ORBITER DATA (NGN039) (03 MAR 75)

REFERENCE DATA

SREF =	2690.0000 SQ.FT.	XMRP =	1109.0000 IN.XO
LREF =	474.8100 IN.	YMRP =	.0000 IN.YO
BREF =	936.6800 IN.	ZMRP =	375.0000 IN.ZO
SCALE =	.0300		

PARAMETRIC DATA

ALPHAC =	4.000	ELV-IB =	.000
ELV-OB =	3.000	ELEVON =	5.000
ALPHAO =	10.000	BETAO =	.000
PHI =	.000	DX =	.000
DY =	10.000	DZ =	7.500

RN/L = 3.35 GRADIENT INTERVAL = -5.00/ 5.00

MACH = .600

BETA	CN	CA	CLM	CY	CBL	CYN	CL	CD	CSL	CLN
-10.000	.42480	.00300	.03434	-.01374	-.00067	.00039	.41727	.07970	-.00059	.00051
-7.000	.43784	.00104	.03088	-.00855	-.00240	-.00054	.43044	.08019	-.00248	-.00019
-5.000	.43905	.00127	.03371	-.00569	-.00355	-.00116	.43060	.08050	-.00371	-.00050
-3.000	.43928	.00070	.03540	-.00300	-.00474	-.00189	.43190	.08020	-.00500	-.00100
-2.000	.44081	.00021	.03551	-.00220	-.00539	-.00221	.43349	.08000	-.00570	-.00120
-1.000	.43855	.00059	.03871	-.00149	-.00606	-.00244	.43119	.08000	-.00640	-.00130
.000	.43874	-.00004	.03909	-.00052	-.00668	-.00265	.43149	.07941	-.00708	-.00159
1.000	.43764	-.00017	.04085	-.00000	-.00735	-.00308	.43043	.07910	-.00779	-.00170
2.000	.43624	.00007	.04398	.00010	-.00793	-.00329	.42901	.07910	-.00839	-.00160
3.000	.43591	.00001	.04462	.00059	-.00857	-.00374	.42869	.07900	-.00921	-.00210
5.000	.43264	.00074	.04920	.00034	-.01023	-.00460	.42533	.07918	-.01090	-.00267
10.000	.42805	.00309	.06293	-.00211	-.01524	-.00730	.41839	.08050	-.01631	-.00440
GRADIENT	-.00061	-.00007	.00157	.00060	-.00066	-.00033	-.00059	-.00017	-.00071	-.00020

CA20 747/0 01 S1 AT38 AT39 ORBITER DATA (NGN040) (03 MAR 75)

REFERENCE DATA

SREF =	2690.0000 SQ.FT.	XMRP =	1109.0000 IN.XO
LREF =	474.8100 IN.	YMRP =	.0000 IN.YO
BREF =	936.6800 IN.	ZMRP =	375.0000 IN.ZO
SCALE =	.0300		

PARAMETRIC DATA

ALPHAC =	.000	BETAC =	.000
ELV-IB =	.000	ELV-OB =	3.000
ELEVON =	5.000	MACH =	.600
BETAO =	.000	PHI =	.000
DX =	.000	DY =	.000

RN/L = 3.37 GRADIENT INTERVAL = -1.00/ 4.00

ALPHAO = 8.000

DZ	CN	CA	CLM	CY	CBL	CYN	CL	CD	CSL	CLN
.000	.38559	.01531	.04836	-.00292	-.00341	-.00147	.37971	.06883	-.00358	-.00098
3.000	.38629	.01352	.04035	-.00242	-.00299	-.00128	.37965	.06701	-.00313	-.00085
7.500	.38700	.01261	.03104	-.00164	-.00260	-.00123	.38148	.06635	-.00274	-.00085
15.000	.38473	.01350	.02320	-.00114	-.00243	-.00107	.38301	.06830	-.00256	-.00072
30.000	.40831	.01438	.01358	-.00021	-.00221	-.00067	.40233	.07107	-.00229	-.00035
45.000	.41765	.01539	.00781	.00057	-.00235	-.00120	.41137	.07383	-.00259	-.00065
60.000	.43993	.01521	-.01012	.00483	-.00085	.00113	.43358	.07629	-.00069	.00124
GRADIENT	-.00010	-.00060	-.00267	.00017	.00014	.00006	-.00002	-.00060	.00015	.00004

ORIGINAL PAGE IS
OF POOR QUALITY

CA20 747/0 01 S1 AT38 AT39 ORBITER DATA (NGN041) (03 MAR 75)

REFERENCE DATA

SREF = 2690.0000 SQ.FT. XMRP = 1109.0000 IN.XO
LREF = 474.8100 IN. YMRP = .0000 IN.YO
BREF = 936.6800 IN. ZMRP = 375.0000 IN.ZO
SCALE = .0300

PARAMETRIC DATA

ALPHAC = 4.000 BETAC = .000
ELV-IB = .000 ELV-OB = 3.000
ELEVON = 5.000 MACH = .600
BETAO = .000 PHI = .000
DX = .000 DY = .000

RN/L = 3.27 GRADIENT INTERVAL = -1.00/ 4.00

ALPHAO = 12.000

DZ	CN	CA	CLM	CY	CBL	CYN	CL	CD	CSL	CLN
.000	.54688	-.04257	.05798	-.00106	-.00335	-.00078	.54378	.07207	-.00344	-.00006
3.000	.54368	-.04297	.05669	-.00058	-.00298	-.00050	.54073	.07101	-.00302	.00013
7.500	.54945	-.04311	.05109	-.00039	-.00255	-.00033	.54641	.07207	-.00257	.00020
15.000	.56979	-.04361	.04100	-.00024	-.00225	-.00010	.56540	.07581	-.00222	.00037
30.000	.59610	-.04190	.03296	.00059	-.00211	.00036	.59178	.08295	-.00199	.00079
45.000	.61675	-.04205	.02555	.00077	-.00252	.00037	.61201	.08710	-.00239	.00089
60.000	.62639	-.04188	.02095	.00247	-.00273	.00084	.62140	.08927	-.00250	.00139
GRADIENT	-.00107	-.00013	-.00043	.00016	.00012	.00009	-.00102	-.00035	.00014	.00006

CA20 747/0 01 S1 AT38 AT39 ORBITER DATA (NGN042) (03 MAR 75)

REFERENCE DATA

SREF = 2690.0000 SQ.FT. XMRP = 1109.0000 IN.XO
LREF = 474.8100 IN. YMRP = .0000 IN.YO
BREF = 936.6800 IN. ZMRP = 375.0000 IN.ZO
SCALE = .0300

PARAMETRIC DATA

ALPHAC = 8.000 BETAC = .000
ELV-IB = .000 ELV-OB = 3.000
ELEVON = 5.000 MACH = .600
BETAO = .000 PHI = .000
DX = .000 DY = .000

RN/L = 3.33 GRADIENT INTERVAL = -1.00/ 4.00

ALPHAO = 16.000

DZ	CN	CA	CLM	CY	CBL	CYN	CL	CD	CSL	CLN
.000	.66396	-.05229	.08722	-.00375	-.00023	.00098	.65265	.13275	.00005	.00101
3.000	.67263	-.05091	.08191	-.00284	-.00108	.00063	.65061	.13546	-.00086	.00090
7.500	.68610	-.04886	.07419	-.00152	-.00224	.00015	.67299	.14215	-.00212	.00076
15.000	.71524	-.04560	.06492	-.00013	-.00265	-.00014	.70010	.15331	-.00259	.00060
30.000	.76809	-.04027	.04841	.00241	-.00328	-.00095	.74944	.17301	-.00342	-.00001
45.000	.80086	-.03710	.03704	.00355	-.00340	-.00104	.78006	.18508	-.00356	-.00006
60.000	.82190	-.03530	.02893	.00568	-.00355	-.00077	.80007	.19165	-.00362	.00024
GRADIENT	.00289	.00046	-.00177	.00031	-.00028	-.00012	.00265	.00124	-.00030	-.00003

CA20 747/0 01 S1 AT39 AT39 ORBITER DATA (NGN043) (03 MAR 75)

REFERENCE DATA

SREF = 2690.0000 SQ.FT. XMRP = 1109.0000 IN.XO
LREF = 474.8100 IN. YMRP = .0000 IN.YO
BREF = 936.6800 IN. ZMRP = 375.0000 IN.ZO
SCALE = .0300

PARAMETRIC DATA

ALPHAC =	4.000	BETAC =	-5.000
ELV-IB =	.000	ELV-OB =	3.000
ELEVON =	5.000	MACH =	.600
BETAO =	-5.000	PHI =	.000
DX =	.000	DY =	.000

RN/L = 3.34 GRADIENT INTERVAL = -1.00/ 4.00

ALPHAO = 12.000

DZ	CN	CA	CLM	CY	CBL	CYN	CL	CD	CSL	CLN
.000	.57401	-.04492	.03957	.04199	.00829	.01687	.57080	.07540	.01161	.01478
3.000	.56596	-.04529	.03319	.03924	.00821	.01695	.56301	.07337	.00999	.01715
7.500	.57349	-.04571	.02071	.04120	.00405	.01881	.57046	.07452	.00787	.01765
15.000	.59369	-.04546	.01048	.04606	.00236	.01800	.59016	.07897	.00605	.01712
30.000	.62336	-.04440	.00081	.05011	.00089	.01780	.61897	.08618	.00457	.01723
45.000	.64300	-.04372	-.00571	.05173	.00012	.01749	.63804	.09092	.00375	.01709
60.000	.65348	-.04312	-.01018	.05250	-.00049	.01768	.64817	.09369	.00320	.01740
GRADIENT	-.00269	-.00012	-.00213	-.00092	-.00069	.00066	-.00260	-.00068	-.00054	.00079

CA20 747/0 02 S1 AT38 AT39 ORBITER DATA (NGN044) (03 MAR 75)

REFERENCE DATA

SREF = 2690.0000 SQ.FT. XMRP = 1109.0000 IN.XO
LREF = 474.8100 IN. YMRP = .0000 IN.YO
BREF = 936.6800 IN. ZMRP = 375.0000 IN.ZO
SCALE = .0300

PARAMETRIC DATA

ALPHAC =	4.000	BETAC =	-5.000
ELV-IB =	.000	ELV-OB =	3.000
ELEVON =	5.000	MACH =	.600
BETAO =	-5.000	PHI =	.000
DX =	.000	DY =	.000

RN/L = 3.33 GRADIENT INTERVAL = -1.00/ 4.00

ALPHAO = 12.000

DZ	CN	CA	CLM	CY	CBL	CYN	CL	CD	CSL	CLN
.000	.57733	.00811	.04681	.05271	.01127	.01084	.56302	.12797	.01328	.00826
3.000	.56194	.00821	.04724	.05192	.00925	.01135	.54796	.12486	.01141	.00919
7.500	.56141	.00697	.04439	.05331	.00689	.01169	.54728	.12550	.00917	.01000
15.000	.57724	.01037	.03907	.05631	.00500	.01185	.56247	.13016	.00735	.01055
30.000	.60548	.01189	.03076	.06002	.00343	.01168	.58978	.13752	.00578	.01071
45.000	.62413	.01305	.02475	.05113	.00264	.01140	.60778	.14253	.00495	.01060
60.000	.63379	.01370	.02085	.06267	.00201	.01126	.61710	.14517	.00431	.01060
GRADIENT	-.00513	.00003	.00014	-.00026	-.00067	.00017	-.00502	-.00103	-.00062	.00031

CA20 747/1 01 SI AT38 AT39 ORBITER DATA (NGN045) (03 MAR 75)

REFERENCE DATA

SREF = 2690.0000 SQ.FT. XMRP = 1109.0000 IN.XO
LREF = 474.8100 IN. YMRP = .0000 IN.YO
BREF = 936.6800 IN. ZMRP = 375.0000 IN.ZO
SCALE = .0300

PARAMETRIC DATA

ALPHAC = .000 BETAC = .000
ELV-IB = .000 ELV-OB = 3.000
ELEVON = 5.000 MACH = .600
BETAO = .000 PHI = .000
DX = .000 DY = .000

RN/L = 3.23 GRADIENT INTERVAL = -1.00/ 4.00

ALPHAO = 8.000

DZ	CN	CA	CLM	CY	CBL	CYN	CL	CD	CSL	CLN
.000	.42229	.01295	.04308	-.00246	-.00291	-.00049	.41636	.07160	-.00295	-.00009
3.000	.41309	.01272	.03998	-.00141	-.00265	-.00091	.40730	.07008	-.00275	-.00053
7.500	.41521	.01270	.03153	-.00046	-.00232	-.00095	.40940	.07036	-.00243	-.00062
15.000	.42394	.01246	.02103	-.00021	-.00213	-.00072	.41808	.07134	-.00221	-.00041
30.000	.43238	.01368	.01254	.00076	-.00196	-.00038	.42627	.07373	-.00200	-.00010
45.000	.43969	.01372	.00453	.00139	-.00217	-.00037	.43351	.07478	-.00220	-.00007
60.000	.44666	.02175	.00578	.00525	-.00083	.00091	.43929	.08371	-.00070	.00102
GRADIENT	-.00307	-.00008	-.00104	.00035	.00009	-.00014	-.00303	-.00050	.00007	-.00015

CA20 747/1 01 SI AT38 AT39 ORBITER DATA (NGN046) (03 MAR 75)

REFERENCE DATA

SREF = 2690.0000 SQ.FT. XMRP = 1109.0000 IN.XO
LREF = 474.8100 IN. YMRP = .0000 IN.YO
BREF = 936.6800 IN. ZMRP = 375.0000 IN.ZO
SCALE = .0300

PARAMETRIC DATA

ALPHAC = 4.000 BETAC = .000
ELV-IB = .000 ELV-OB = 3.000
ELEVON = 5.000 MACH = .600
BETAO = .000 PHI = .000
DX = .000 DY = .000

RN/L = 3.33 GRADIENT INTERVAL = -1.00/ 4.00

ALPHAO = 12.000

DZ	CN	CA	CLM	CY	CBL	CYN	CL	CD	CSL	CLN
.000	.57835	-.00610	.06169	-.00294	-.00286	.00021	.56698	.11428	-.00276	.00080
3.000	.57574	-.00671	.05915	-.00238	-.00277	.00023	.56455	.11314	-.00266	.00080
7.500	.58159	-.00789	.05160	-.00199	-.00260	.00026	.57052	.11320	-.00249	.00080
15.000	.60097	-.00849	.04047	-.00178	-.00227	.00041	.58950	.11662	-.00214	.00087
30.000	.62598	-.00784	.03098	-.00078	-.00247	.00079	.61393	.12246	-.00225	.00129
45.000	.64093	-.00727	.02460	-.00027	-.00267	.00056	.62844	.12614	-.00249	.00110
60.000	.64823	-.00689	.02049	.00076	-.00278	.00105	.63550	.12804	-.00250	.00161
GRADIENT	-.00087	-.00020	-.00085	.00019	.00003	.00001	-.00081	-.00038	.00003	.00000

CA20 747/1 01 SI AT38 AT39 ORBITER DATA (NGN047) (03 MAR 75)

REFERENCE DATA

SREF =	2690.0000 SQ.FT.	XMRP =	1109.0000 IN.XO
LREF =	474.8100 IN.	YMRP =	.0000 IN.YO
BREF =	936.6900 IN.	ZMRP =	375.0000 IN.ZO
SCALE =	.0300		

PARAMETRIC DATA

ALPHAC =	8.000	BETAC =	.000
ELV-IB =	.000	ELV-OB =	3.000
ELEVON =	5.000	MACH =	.600
BETAO =	.000	PHI =	.000
DX =	.000	DY =	.000

RN/L = 3.25 GRADIENT INTERVAL = -1.00/ 4.00

ALPHAO = 16.000

DZ	CN	CA	CLM	CY	CBL	CYN	CL	CD	CSL	CLN
.000	.69959	-.01533	.07494	-.00229	-.00259	.00055	[illegible]09	.17820	-.00226	.00121
3.000	.69480	-.01310	.06034	-.00139	-.00226	.00025	[illegible]73	.17870	-.00210	.00086
7.500	.71015	-.01241	.07381	-.00050	-.00253	.00001	.69606	.18382	-.00242	.00071
15.000	.74061	-.01022	.06132	.00086	-.00289	-.00038	.71474	.19431	-.00289	.00043
30.000	.78507	-.00495	.04650	.00295	-.00328	-.00083	.75602	.21163	-.00338	.00011
45.000	.81530	-.00210	.03600	.00375	-.00336	-.00096	.76429	.22271	-.00350	-.00000
60.000	.83263	-.00055	.02921	.00544	-.00350	-.00082	.80053	.22897	-.00359	.00017
GRADIENT	-.00159	.00075	.00180	.00030	.00008	-.00010	-.00212	.00017	.00005	-.00012

CA20 747/1 01 SI AT38 AT39 ORBITER DATA (NGN048) (03 MAR 75)

REFERENCE DATA

SREF =	2690.0000 SQ.FT.	XMRP =	1109.0000 IN.XO
LREF =	474.8100 IN.	YMRP =	.0000 IN.YO
BREF =	936.6900 IN.	ZMRP =	375.0000 IN.ZO
SCALE =	.0300		

PARAMETRIC DATA

ALPHAC =	4.000	BETAC =	-5.000
ELV-IB =	.000	ELV-OB =	3.000
ELEVON =	5.000	MACH =	.600
BETAO =	-5.000	PHI =	.000
DX =	.000	DY =	.000

RN/L = 3.34 GRADIENT INTERVAL = -1.00/ 4.00

ALPHAO = 12.000

DZ	CN	CA	CLM	CY	CBL	CYN	CL	CD	CSL	CLN
.000	.60501	-.02062	.03814	.04361	.00939	.01725	.59608	.10562	.01277	.01492
3.000	.59737	-.02116	.03274	.04066	.00709	.01946	.59871	.10350	.01098	.01755
7.500	.60696	-.02194	.01950	.04292	.00484	.01916	.59926	.10473	.00972	.01774
15.000	.62574	-.02208	.00882	.04765	.00237	.01835	.61665	.10850	.00672	.01733
30.000	.65111	-.02145	-.00134	.05173	.00153	.01814	.64134	.11439	.00526	.01742
45.000	.65594	-.02078	-.00762	.05316	.00045	.01787	.65570	.11813	.00416	.01739
60.000	.67350	-.02019	-.01172	.05379	-.00015	.01805	.66337	.12026	.00361	.01769
GRADIENT	-.00265	-.00018	-.00180	-.00098	-.00076	.00074	-.00245	-.00071	-.00059	.00083

CA20 747/1 01 SI ORBITER DATA (NGN049) (11 MAR 75)

REFERENCE DATA

SREF = 2690.0000 SQ.FT. XMRP = 1109.0000 IN.XO
LREF = 474.8100 IN. YMRP = .0000 IN.YO
BREF = 936.6900 IN. ZMRP = 375.0000 IN.ZO
SCALE = .0300

PARAMETRIC DATA

BETAC =	.000	ELV-IB =	.000
ELV-OB =	3.000	ELEVON =	5.000
MACH =	.600	BETAO =	.000
PHI =	.000	DY =	.000
ALPHAC =	.000	DX =	.000

RN/L = 3.24 GRADIENT INTERVAL = .00/ 12.00

ALPHAO = 6.000

DZ	CN	CA	CLM	CY	CBL	CYN	CL	CD	CSL	CLN
.000	.25140	.02835	.04677	-.00119	-.00229	-.00145	.24705	.05448	-.00243	-.00121
3.000	.26208	.02839	.03306	-.00057	-.00208	-.00153	.25789	.05364	-.00223	-.00130
7.500	.27017	.02586	.02504	-.00035	-.00211	-.00120	.26599	.05396	-.00222	-.00097
15.000	.28271	.02499	.01513	.00010	-.00199	-.00105	.27855	.05440	-.00209	-.00084
30.000	.29524	.02650	.00752	.00144	-.00163	-.00040	.29085	.05722	-.00166	-.00023
45.000	.35410	.01900	-.02636	.00166	.00011	-.00470	.35018	.05591	-.00039	-.00469
60.000	.62692	-.03488	-.18867	-.01210	.01196	-.03668	.62703	.03083	.00806	-.03773
GRADIENT	.00245	-.00032	-.00281	.00011	.00002	.00004	.00247	-.00006	.00003	.00003

RN/L = 3.31 GRADIENT INTERVAL = .00/ 12.00

ALPHAO = 10.000

DZ	CN	CA	CLM	CY	CBL	CYN	CL	CD	CSL	CLN
.000	.50083	.00219	.07601	-.00167	-.00249	-.00039	.49284	.08912	-.00252	.00005
3.000	.50711	-.00164	.05814	-.00160	-.00217	-.00055	.49969	.08644	-.00223	-.00016
7.500	.51064	-.00305	.04427	-.00117	-.00202	-.00043	.50341	.08567	-.00206	-.00008
15.000	.51744	-.00375	.03141	-.00097	-.00178	-.00018	.51024	.08615	-.00179	.00013
30.000	.52432	-.00351	.01933	.00030	-.00162	-.00001	.51697	.08759	-.00160	.00027
45.000	.52988	-.00341	.01191	.00085	-.00183	-.00069	.52242	.08866	-.00192	-.00036
60.000	.54770	-.00461	.00193	.00195	-.00128	-.00295	.54018	.09057	-.00177	-.00268
GRADIENT	.00127	-.00057	-.00414	.00007	.00006	-.00000	.00136	-.00044	.00006	-.00001

RN/L = 3.27 GRADIENT INTERVAL = .00/ 12.00

ALPHAO = 14.000

DZ	CN	CA	CLM	CY	CBL	CYN	CL	CD	CSL	CLN
.000	.76569	-.00474	.06870	.00052	-.00326	-.00094	.74409	.18064	-.00339	-.00012
3.000	.76130	-.00804	.05859	.00090	-.00316	-.00105	.74063	.17638	-.00332	-.00026
7.500	.75299	-.01140	.04671	.00183	-.00315	-.00129	.73338	.17111	-.00337	-.00049
15.000	.74584	-.01264	.03536	.00183	-.00304	-.00108	.72674	.16917	-.00321	-.00031
30.000	.74184	-.01254	.02456	.00258	-.00292	-.00094	.72284	.16730	-.00306	-.00020
45.000	.73941	-.01260	.01930	.00305	-.00306	-.00066	.72050	.16666	-.00313	.00010
60.000	.73187	-.01190	.01878	.00400	-.00336	.00093	.71301	.16551	-.00304	.00171
GRADIENT	-.00171	-.00089	-.00291	.00018	.00001	-.00005	-.00144	-.00126	.00000	-.00005

CA20 747/1 01 S1 ORBITER DATA (NGN050) (11 MAR 75)

REFERENCE DATA

SREF = 2690.0000 SQ.FT. XMRP = 1109.0000 IN.XO
LREF = 474.8100 IN. YMRP = .0000 IN.YO
BREF = 936.6800 IN. ZMRP = 375.0000 IN.ZO
SCALE = .0300

PARAMETRIC DATA

BETAC =	.000	ELV-IB =	.000
ELV-OB =	3.000	ELEVON =	5.000
MACH =	.600	BETAO =	.000
PHI =	.000	DY =	.000
ALPHAC =	.000	DX =	10.000

RN/L = 3.25 GRADIENT INTERVAL = .00/ 12.00

ALPHAO = 6.000

DZ	CN	CA	CLM	CY	CBL	CYN	CL	CD	CSL	CLN
.000	.23585	.02560	.03414	-.00194	-.00213	-.00167	.23288	.05021	-.00229	-.00144
3.000	.24721	.02432	.02429	-.00154	-.00206	-.00143	.24332	.05003	-.00220	-.00120
7.500	.25914	.02308	.01531	-.00089	-.00195	-.00148	.25530	.05004	-.00210	-.00127
15.000	.27009	.02394	.01071	-.00046	-.00187	-.00139	.26610	.05204	-.00201	-.00119
30.000	.28752	.02491	.00378	-.00041	-.00166	-.00039	.28334	.05483	-.00169	-.00021
45.000	.35924	.00322	-.05098	-.00585	-.00041	.00502	.35698	.04180	.00012	.00504
60.000	.66177	-.10619	-.27501	-.03716	.00683	.02823	.66924	-.03643	.00974	.02736
GRADIENT	.00295	-.00033	-.00247	.00014	.00002	.00002	.00296	-.00002	.00003	.00002

RN/L = 3.25 GRADIENT INTERVAL = .00/ 12.00

ALPHAO = 10.000

DZ	CN	CA	CLM	CY	CBL	CYN	CL	CD	CSL	CLN
.000	.46569	.00283	.07189	-.00251	-.00255	-.00025	.45812	.09366	-.00255	.00019
3.000	.47645	-.00080	.05548	-.00169	-.00237	-.00049	.46936	.08194	-.00242	-.00007
7.500	.48837	-.00384	.03814	-.00111	-.00215	-.00063	.48161	.08102	-.00223	-.00024
15.000	.49867	-.00411	.02702	-.00077	-.00192	-.00048	.49181	.08254	-.00197	-.00014
30.000	.51152	-.00357	.01661	.00013	-.00181	-.00010	.50437	.08531	-.00180	.00022
45.000	.52261	-.00499	.00791	.00026	-.00199	.00004	.51553	.08585	-.00196	.00038
60.000	.54473	-.01141	-.00918	-.00021	-.00209	.00073	.53843	.08335	-.00193	.00108
GRADIENT	.00299	-.00087	-.00445	.00018	.00005	-.00005	.00310	-.00034	.00004	-.00006

RN/L = 3.23 GRADIENT INTERVAL = .00/ 12.00

ALPHAO = 14.000

DZ	CN	CA	CLM	CY	CBL	CYN	CL	CD	CSL	CLN
.000	.70651	-.00987	.08218	.00068	-.00282	-.00072	.69767	.16231	-.00291	-.00002
3.000	.71012	-.01082	.07103	.00100	-.00280	-.00092	.69165	.16130	-.00294	-.00021
7.500	.71620	-.01574	.05233	.00118	-.00272	-.00106	.69873	.15800	-.00290	-.00037
15.000	.72124	-.01638	.03746	.00116	-.00245	-.00082	.70378	.15959	-.00259	-.00020
30.000	.73041	-.01564	.02437	.00213	-.00248	-.00081	.71255	.16133	-.00261	-.00019
45.000	.73051	-.01404	.02107	.00252	-.00261	-.00078	.71221	.16310	-.00272	-.00012
60.000	.72342	-.00999	.02367	.00445	-.00280	-.00080	.70435	.16532	-.00291	-.00009
GRADIENT	.00130	-.00093	-.00399	.00007	.00001	-.00004	.00148	-.00059	.00000	-.00005

ORIGINAL PAGE IS
OF POOR QUALITY

CA20 747/1 01 SI ORBITER DATA (NGN051) (11 MAR 75)

REFERENCE DATA

SREF = 2690.0000 SQ.FT. XMRP = 1109.0000 IN.XO
LREF = 474.8100 IN. YMRP = .0000 IN.YO
BREF = 936.6800 IN. ZMRP = 375.0000 IN.ZO
SCALE = .0300

PARAMETRIC DATA

BETAC =	.000	ELV-1B =	.000
ELV-OB =	3.000	ELEVON =	5.000
MACH =	.600	BETAO =	.000
PHI =	.000	DY =	.000
ALPHAC =	.000	DX =	20.000

RN/L = 3.24 GRADIENT INTERVAL = .00/ 12.00

ALPHAO = 6.000

DZ	CN	CA	CLM	CY	CBL	CYN	CL	CD	CSL	CLN
.000	.24824	.01677	.00372	-.00058	-.00215	-.00205	.24512	.04263	-.00235	-.00181
3.000	.25168	.01855	.00500	-.00039	-.00188	-.00178	.24836	.04476	-.00206	-.00157
7.500	.25821	.01939	.00433	-.00035	-.00182	-.00158	.25477	.04627	-.00197	-.00138
15.000	.26924	.02044	.00272	-.00034	-.00179	-.00128	.26563	.04848	-.00191	-.00108
30.000	.28464	.02183	.00116	.00094	-.00185	-.00090	.28080	.05146	-.00193	-.00070
45.000	.31478	.03241	.00437	-.00037	-.00049	.00074	.30957	.06514	-.00041	.00079
60.000	.38625	.07075	.02710	-.00851	.00448	.00612	.37674	.11074	.00509	.00592
GRADIENT	.00134	.00034	.00006	.00003	.00004	.00006	.00130	.00047	.00005	.00006

RN/L = 3.25 GRADIENT INTERVAL = .00/ 12.00

ALPHAO = 10.000

DZ	CN	CA	CLM	CY	CBL	CYN	CL	CD	CSL	CLN
.000	.46623	-.00525	.03634	.00025	-.00200	-.00128	.46006	.07579	-.00219	-.00092
3.000	.47168	-.00699	.03124	-.00075	-.00223	-.00096	.46571	.07502	-.00237	-.00056
7.500	.47933	-.00779	.02488	-.00090	-.00224	-.00093	.47340	.07556	-.00235	-.00042
15.000	.48911	-.00671	.01955	-.00020	-.00201	-.00071	.48285	.07833	-.00210	-.00035
30.000	.50376	-.00578	.01355	.00009	-.00187	-.00020	.49711	.08178	-.00188	.00012
45.000	.51341	-.00518	.00924	.00065	-.00211	-.00017	.50651	.08405	-.00211	.00020
60.000	.52742	-.00523	.00273	.00060	-.00225	.00032	.52032	.08544	-.00216	.00070
GRADIENT	.00174	-.00033	-.00152	-.00014	-.00003	.00006	.00177	-.00002	-.00002	.00006

RN/L = 3.28 GRADIENT INTERVAL = .00/ 12.00

ALPHAO = 14.000

DZ	CN	CA	CLM	CY	CBL	CYN	CL	CD	CSL	CLN
.000	.69921	-.02200	.03647	.00430	-.00451	-.00418	.69377	.14781	-.00539	-.00295
3.000	.70059	-.02491	.03871	.00164	-.00323	-.00203	.69591	.14531	-.00353	-.00118
7.500	.70365	-.02638	.03684	.00025	-.00240	-.00070	.69913	.14463	-.00250	-.00010
15.000	.70836	-.02333	.03092	.00112	-.00240	-.00083	.69296	.14873	-.00253	-.00022
30.000	.71846	-.01982	.02305	.00223	-.00252	-.00076	.70191	.15459	-.00263	-.00013
45.000	.72417	-.01863	.01855	.00241	-.00266	-.00077	.70716	.15712	-.00276	-.00010
60.000	.72449	-.01855	.01621	.00406	-.00282	-.00079	.70745	.15727	-.00293	-.00009
GRADIENT	.00050	-.00056	.00001	-.00052	.00027	.00045	.00072	-.00040	.00037	.00037

CA20 747/1 01 SI ORBITER DATA (NGN052) (11 MAR 75)

REFERENCE DATA

SREF = 2690.0000 SQ.FT. XMRP = 1109.0000 IN.XO
LREF = 474.8100 IN. YMRP = .0000 IN.YO
BREF = 935.6800 IN. ZMRP = 375.0000 IN.ZO
SCALE = .0300

PARAMETRIC DATA

ELV-IB =	.000	ELV-OB =	3.000
ELEVON =	5.000	MACH =	.600
BETAO =	.000	BETAC =	.000
PHI =	.000	DY =	.000
DX =	.000	ALPHAC =	4.000

RN/L = 3.22 GRADIENT INTERVAL = .00/ 12.00

ALPHAO = 6.000

DZ	CN	CA	CLM	CY	CBL	CYN	CL	CD	CSL	CLN
.000	.14167	.02956	.03282	.00021	-.00217	-.00198	.13781	.04421	-.00236	-.00174
3.000	.15378	.02958	.02826	.00025	-.00205	-.00173	.14984	.04549	-.00222	-.00150
7.500	.17027	.02941	.02348	.00040	-.00201	-.00147	.16626	.04705	-.00215	-.00125
15.000	.19772	.02813	.01577	.00099	-.00188	-.00149	.19373	.04854	-.00203	-.00128
30.000	.23297	.02943	.01235	.00057	-.00157	-.00012	.22862	.05362	-.00158	.00005
45.000	.26938	.02624	-.00219	.00169	-.00093	-.00025	.26505	.05634	-.00095	-.00015
60.000	.42498	.01246	-.05914	.01282	-.00187	-.00650	.42135	.05692	-.00255	-.00537
GRADIENT	.00390	-.00002	-.00123	.00003	.00002	.00007	.00378	.00038	.00003	.00005

RN/L = 3.24 GRADIENT INTERVAL = .00/ 12.00

ALPHAO = 10.000

DZ	CN	CA	CLM	CY	CBL	CYN	CL	CD	CSL	CLN
.000	.38552	.00618	.05458	-.00038	-.00285	-.00086	.37859	.07303	-.00296	-.00035
3.000	.38676	.00498	.04707	-.00024	-.00273	-.00090	.38986	.07381	-.00285	-.00041
7.500	.41279	.00316	.03629	-.00008	-.00252	-.00092	.40597	.07479	-.00264	-.00047
15.000	.43107	.00237	.02871	.00000	-.00226	-.00064	.42411	.07719	-.00233	-.00023
30.000	.45948	.00178	.02051	.00035	-.00201	-.00018	.45219	.08155	-.00201	.00017
45.000	.48003	.00125	.01400	.00046	-.00216	-.00041	.47252	.08458	-.00220	-.00007
60.000	.50771	-.00020	.00382	.00132	-.00262	-.00111	.50003	.08797	-.00277	-.00064
GRADIENT	.00363	-.00040	-.00244	.00004	.00004	-.00001	.00355	.00023	.00004	-.00002

RN/L = 3.24 GRADIENT INTERVAL = .00/ 12.00

ALPHAO = 14.000

DZ	CN	CA	CLM	CY	CBL	CYN	CL	CD	CSL	CLN
.000	.62931	-.00835	.08464	-.00115	-.00245	.00009	.61264	.14414	-.00235	.00058
3.000	.63731	-.01191	.06900	-.00073	-.00202	-.00016	.62126	.14262	-.00200	.00033
7.500	.64746	-.01427	.05471	-.00035	-.00187	-.00029	.63169	.14278	-.00189	.00018
15.000	.65977	-.01446	.04446	-.00014	-.00184	-.00025	.64367	.14558	-.00164	.00020
30.000	.69220	-.01442	.03129	.00180	-.00209	-.00035	.67542	.15165	-.00211	.00017
45.000	.69351	-.01392	.02548	.00072	-.00217	-.00031	.67627	.15427	-.00218	.00023
60.000	.69375	-.01404	.02192	.00051	-.00205	.00062	.68139	.15543	-.00184	.00109
GRADIENT	.00241	-.00077	-.00393	.00010	.00007	-.00005	.00282	-.00016	.00006	-.00006

CA20 747/1 OI SI ORBITER DATA (NGN053) (11 MAR 75)

REFERENCE DATA

SREF = 2690.0000 SQ.FT. XMRP = 1109.0000 IN.XO
LREF = 474.8100 IN. YMRP = .0000 IN.YO
BREF = 936.6800 IN. ZMRP = 375.0000 IN.ZO
SCALE = .0300

PARAMETRIC DATA

ELV-IB =	.000	ELV-OB =	3.000
ELEVON =	5.000	MACH =	.600
BETAO =	.000	BETAC =	.000
PHI =	.000	DY =	.000
DX =	10.000	ALPHAC =	4.000

RN/L = 3.27 GRADIENT INTERVAL = .00/ 12.00

ALPHAO = 6.000

DZ	CN	CA	CLM	CY	CBL	CYN	CL	CD	CSL	CLN
.000	.13234	.02813	.01922	-.00061	-.00203	-.00210	.12867	.04181	-.00224	-.00188
3.000	.14657	.02735	.01462	-.00083	-.00191	-.00184	.14291	.04252	-.00209	-.00163
7.500	.16399	.02705	.01110	-.00078	-.00193	-.00163	.16027	.04405	-.00209	-.00142
15.000	.18774	.02723	.00834	-.00014	-.00184	-.00154	.18386	.04671	-.00199	-.00134
30.000	.23295	.02837	.00539	.00110	-.00169	-.00124	.22870	.05257	-.00181	-.00105
45.000	.31902	.03329	-.01142	.01162	-.00504	-.00453	.31380	.06645	-.00548	-.00398
60.000	.48109	.04922	-.05099	.04191	-.01617	-.01532	.47331	.09923	-.01768	-.01355
GRADIENT	.00419	-.00014	-.00106	-.00002	.00001	.00006	.00418	.00030	.00002	.00006

RN/L = 3.23 GRADIENT INTERVAL = .00/ 12.00

ALPHAO = 10.000

DZ	CN	CA	CLM	CY	CBL	CYN	CL	CD	CSL	CLN
.000	.35608	.00854	.04974	-.00281	-.00269	-.00115	.34919	.07024	-.00285	-.00065
3.000	.37374	.00538	.03615	-.00262	-.00248	-.00113	.36713	.07019	-.00282	-.00069
7.500	.39158	.00379	.02768	-.00242	-.00235	-.00097	.38497	.07173	-.00248	-.00055
15.000	.41410	.00269	.02126	-.00230	-.00208	-.00072	.40734	.07455	-.00218	-.00035
30.000	.44702	.00166	.01559	-.00175	-.00174	-.00019	.43990	.07946	-.00175	.00011
45.000	.47093	.00137	.01065	-.00074	-.00211	-.00039	.46354	.08313	-.00215	-.00001
60.000	.49735	.00101	.00448	.00095	-.00294	-.00079	.48982	.08736	-.00304	-.00027
GRADIENT	.00467	-.00051	-.00286	.00005	.00004	.00002	.00471	.00021	.00005	.00002

RN/L = 3.23 GRADIENT INTERVAL = .00/ 12.00

ALPHAO = 14.000

DZ	CN	CA	CLM	CY	CBL	CYN	CL	CD	CSL	CLN
.000	.59009	-.01299	.08386	-.00517	-.00140	.00084	.57570	.13015	-.00116	.00116
3.000	.60678	-.01783	.06433	-.00472	-.00097	.00069	.59307	.12549	-.00078	.00091
7.500	.62408	-.02031	.04920	-.00456	-.00046	.00072	.61046	.13127	-.00027	.00091
15.000	.64381	-.01989	.03875	-.00437	-.00008	.00076	.62980	.13545	.00011	.00076
30.000	.67071	-.01804	.02795	-.00228	-.00092	.00037	.65515	.14476	-.00080	.00059
45.000	.69511	-.01669	.02330	-.00191	-.00130	.00028	.68977	.14963	-.00119	.00059
60.000	.69281	-.01697	.01899	-.00117	-.00155	.00091	.67614	.15109	-.00129	.00126
GRADIENT	.00448	-.00084	-.00452	.00008	.00013	-.00002	.00457	.00017	.00012	-.00004

CA20 747/1 01 S1 ORBITER DATA (NGN054) (11 MAR 75)

REFERENCE DATA

SREF = 2690.0000 SQ.FT. XMRP = 1109.0000 IN.XO
LREF = 474.8100 IN. YMRP = .0000 IN.YO
BREF = 936.6800 IN. ZMRP = 375.0000 IN.ZO
SCALE = .0300

PARAMETRIC DATA

ELV-IB =	.000	ELV-OB =	3.000
ELEVON =	5.000	MACH =	.600
BETAO =	.000	PHI =	.000
DY =	.000	BETAC =	.000
DX =	20.000	ALPHAC =	4.000

RN/L = 3.25 GRADIENT INTERVAL = .00/ 12.00

ALPHAO = 6.000

DZ	CN	CA	CLM	CY	CBL	CYN	CL	CD	CSL	CLN
.000	.13378	.02454	.00374	-.00078	-.00201	-.00226	.13048	.03939	-.00224	-.00204
3.000	.14618	.02421	.00130	-.00072	-.00192	-.00211	.14285	.03936	-.00213	-.00190
7.500	.16268	.02418	-.00033	-.00059	-.00186	-.00191	.15927	.04105	-.00205	-.00170
15.000	.18429	.02483	.00072	-.00028	-.00183	-.00155	.18069	.04396	-.00198	-.00135
30.000	.22274	.02510	.00062	.00052	-.00157	-.00107	.21890	.04825	-.00167	-.00090
45.000	.26057	.02859	.00764	.00261	-.00232	-.00065	.25615	.05557	-.00237	-.00040
60.000	.27308	.04655	.06528	.00539	-.00594	.00175	.26551	.07683	-.00572	.00236
GRADIENT	.00364	-.00065	-.00053	.00002	.00002	.00005	.00382	.00035	.00002	.00004

RN/L = 3.27 GRADIENT INTERVAL = .00/ 12.00

ALPHAO = 10.000

DZ	CN	CA	CLM	CY	CBL	CYN	CL	CD	CSL	CLN
.000	.35843	.00324	.02274	-.00241	-.00247	-.00138	.35242	.06543	-.00267	-.00093
3.000	.36960	.00278	.01907	-.00229	-.00235	-.00130	.36359	.06592	-.00254	-.00087
7.500	.36459	.00300	.01539	-.00221	-.00227	-.00113	.37822	.06974	-.00243	-.00072
15.000	.40765	.00213	.01188	-.00202	-.00205	-.00083	.40110	.07283	-.00218	-.00046
30.000	.44063	.00169	.00895	-.00106	-.00206	-.00054	.43364	.07817	-.00212	-.00017
45.000	.46255	.00092	.00835	-.00039	-.00220	-.00040	.45537	.08123	-.00223	-.00001
60.000	.48009	.00108	.01069	-.00050	-.00243	.00023	.47261	.08443	-.00235	.00065
GRADIENT	.00348	-.00003	-.00097	.00003	.00003	.00003	.00343	.00058	.00003	.00003

RN/L = 3.27 GRADIENT INTERVAL = .00/ 12.00

ALPHAO = 14.000

DZ	CN	CA	CLM	CY	CBL	CYN	CL	CD	CSL	CLN
.000	.59501	-.02635	.03960	-.00333	-.00293	.00004	.58371	.11837	-.00283	.00075
3.000	.59712	-.02476	.04094	-.00350	-.00273	.00025	.58537	.12043	-.00259	.00090
7.500	.61108	-.02414	.03647	-.00371	-.00203	.00048	.59377	.12441	-.00185	.00095
15.000	.63331	-.02360	.02881	-.00406	-.00078	.00095	.62021	.13031	-.00052	.00111
30.000	.66665	-.02214	.02362	-.00360	.00076	.00130	.65249	.13997	.00105	.00107
45.000	.69765	-.02084	.01905	-.00122	-.00064	.00037	.67226	.14614	-.00053	.00051
60.000	.69702	-.01929	.01321	.00225	-.00230	-.00034	.69099	.14991	-.00231	.00022
GRADIENT	.00222	.00028	-.00046	-.00005	.00012	.00006	.00209	.00081	.00013	.00003

ORIGINAL PAGE IS
OF POOR QUALITY

CA20 747/1 01 S1 ORBITER DATA (NGN055) (11 MAR 75)

REFERENCE DATA

SREF = 2690.0000 SQ.FT. XMRP = 1109.0000 IN.XO
LREF = 474.8100 IN. YMRP = .0000 IN.YO
BREF = 936.6800 IN. ZMRP = 375.0000 IN.ZO
SCALE = .0300

PARAMETRIC DATA

ELV-IB =	.000	ELV-OB =	3.000
ELEVON =	5.000	MACH =	.600
BETAO =	.000	BETAC =	.000
PHI =	.000	DY =	.000
DX =	.000	ALPHAC =	8.000

RN/L = 3.22 GRADIENT INTERVAL = .00/ 12.00

ALPHAO = 6.000

DZ	CN	CA	CLM	CY	CBL	CYN	CL	CD	CSL	CLN
.000	-.02424	.02657	.00433	.00102	-.00259	-.00197	-.02688	.02399	-.00278	-.00169
3.000	.00690	.02730	.01301	.00089	-.00229	-.00183	.00401	.02787	-.00247	-.00158
7.500	.03770	.02783	.01310	.00027	-.00215	-.00157	.03458	.03161	-.00231	-.00134
15.000	.08419	.02922	.01308	.00066	-.00199	-.00163	.08069	.03786	-.00215	-.00141
30.000	.15290	.03063	.01264	.00008	-.00178	-.00040	.14886	.04644	-.00181	-.00021
45.000	.26148	.03039	.00900	.00106	.00096	-.00146	.25688	.05747	.00080	-.00155
60.000	.52706	.02360	.00846	.01382	.01567	-.01188	.52170	.07857	.01435	-.01345
GRADIENT	.00915	.00016	.00108	-.00010	.00006	.00005	.00808	.00101	.00006	.00005

RN/L = 3.25 GRADIENT INTERVAL = .00/ 12.00

ALPHAO = 10.000

DZ	CN	CA	CLM	CY	CBL	CYN	CL	CD	CSL	CLN
.000	.22070	.01367	.04419	-.00034	-.00341	-.00147	.21497	.05178	-.00361	-.00085
3.000	.24622	.01167	.03737	-.00066	-.00302	-.00139	.24045	.05425	-.00322	-.00085
7.500	.27517	.01022	.03318	-.00111	-.00283	-.00117	.26922	.05785	-.00300	-.00085
15.000	.31751	.00893	.02797	-.00101	-.00255	-.00094	.31113	.06393	-.00267	-.00049
30.000	.37845	.00720	.02144	-.00114	-.00217	-.00042	.37145	.07280	-.00221	-.00004
45.000	.41952	.00576	.01657	-.00094	-.00209	-.00044	.41214	.07652	-.00213	-.00007
60.000	.46361	.00325	.01237	-.00012	-.00128	-.00065	.45500	.08371	-.00139	-.00042
GRADIENT	.00720	-.00045	-.00143	-.00010	.00007	.00004	.00717	.00081	.00008	.00003

RN/L = 3.27 GRADIENT INTERVAL = .00/ 12.00

ALPHAO = 14.000

DZ	CN	CA	CLM	CY	CBL	CYN	CL	CD	CSL	CLN
.000	.47115	-.01017	.07962	-.00163	-.00357	-.00044	.45962	.10411	-.00357	.00044
3.000	.49633	-.01360	.05396	-.00194	-.00320	-.00025	.48488	.10588	-.00317	.00053
7.500	.52033	-.01495	.05689	-.00278	-.00278	.00016	.50849	.11137	-.00286	.00083
15.000	.55649	-.01703	.04720	-.00353	-.00155	.00072	.54408	.11811	-.00133	.00108
30.000	.61148	-.01750	.03650	-.00326	-.00045	.00112	.59755	.13095	-.00017	.00120
45.000	.64413	-.01731	.02850	-.00325	-.00038	.00099	.62919	.13303	-.00014	.00104
60.000	.65860	-.01530	.02400	-.00275	-.00072	.00147	.64273	.14449	-.00034	.00160
GRADIENT	.00646	-.00061	-.00292	-.00016	.00010	.00008	.00642	.00097	.00012	.00005

CA20 747/1 01 SI ORBITER DATA (NGN056) (11 MAR 75)

REFERENCE DATA

SREF = 2690.0000 SQ FT. XMRP = 1109.0000 IN.XO
LREF = 474.8100 IN. YMRP = .0000 IN.YO
BREF = 936.6800 IN. ZMRP = 375.0000 IN.ZO
SCALE = .0300

PARAMETRIC DATA

ELV-IB = .000 ELV-OB = 3.000
ELEVON = 5.000 MACH = .600
BETAO = .000 BETAC = .000
PHI = .000 DY = .000
DX = 10.000 ALPHAC = 8.000

RN/L = 3.39 GRADIENT INTERVAL = .00/ 12.00

ALPHAO = 6.000

DZ	CN	CA	CLM	CY	CBL	CYN	CL	CD	CSL	CLN
.000	-.01622	.02488	-.01358	-.00115	-.00230	-.00233	-.01673	.02305	-.00253	-.00209
3.000	.00805	.02516	-.00757	-.00112	-.00209	-.00219	.00537	.02587	-.00231	-.00195
7.500	.03722	.02544	-.00615	-.00075	-.00198	-.00207	.03435	.02919	-.00218	-.00165
15.000	.07857	.02700	-.00144	-.00075	-.00184	-.00186	.07541	.03507	-.00202	-.00165
30.000	.14258	.02829	.00345	-.00086	-.00185	-.00064	.13684	.04304	-.00191	-.00044
45.000	.21712	.02847	.01497	.00094	-.00029	.00007	.21286	.05101	-.00028	.00010
60.000	.33448	.02531	.04769	.00848	.00578	-.00024	.33000	.06013	.00573	-.00065
GRADIENT	.00707	.00007	.00094	.00008	.00004	.00003	.00703	.00081	.00005	.00003

RN/L = 3.24 GRADIENT INTERVAL = .00/ 12.00

ALPHAO = 10.000

DZ	CN	CA	CLM	CY	CBL	CYN	CL	CD	CSL	CLN
.000	.20117	.01426	.02691	-.00269	-.00264	-.00163	.19564	.04899	-.00228	-.00115
3.000	.22426	.01248	.02224	-.00276	-.00237	-.00150	.21869	.05124	-.00259	-.00107
7.500	.25436	.01082	.01884	-.00271	-.00233	-.00129	.24861	.05482	-.00252	-.00086
15.000	.29901	.00931	.01640	-.00237	-.00227	-.00102	.29285	.06109	-.00241	-.00061
30.000	.36459	.00710	.01370	-.00183	-.00196	-.00048	.35781	.07030	-.00201	-.00013
45.000	.40644	.00617	.01328	-.00118	-.00203	-.00051	.39923	.07665	-.00209	-.00015
60.000	.44279	.00556	.01398	-.00112	-.00203	-.00000	.43509	.08236	-.00200	.00035
GRADIENT	.00706	-.00045	-.00105	-.00000	.00004	.00005	.00703	.00078	.00005	.00004

RN/L = 3.23 GRADIENT INTERVAL = .00/ 12.00

ALPHAO = 14.000

DZ	CN	CA	CLM	CY	CBL	CYN	CL	CD	CSL	CLN
.000	.43322	-.00838	.06243	-.00255	-.00334	-.00106	.42239	.09867	-.00349	-.00022
3.000	.45906	-.01197	.05102	-.00280	-.00294	-.00076	.44832	.09845	-.00304	-.00002
7.500	.48666	-.01462	.04477	-.00311	-.00262	-.00057	.47574	.10355	-.00269	.00008
15.000	.53046	-.01733	.03713	-.00391	-.00232	.00018	.51889	.11151	-.00221	.00074
30.000	.59260	-.01925	.03056	-.00327	-.00164	.00093	.57986	.12469	-.00137	.00130
45.000	.63017	-.01893	.02567	-.00346	-.00077	.00117	.61603	.13409	-.00047	.00133
60.000	.65028	-.01882	.02106	-.00221	-.00085	.00162	.63552	.13905	-.00043	.00178
GRADIENT	.00705	-.00081	-.00228	-.00007	.00009	.00006	.00703	.00092	.00011	.00004

ORIGINAL PAGE IS
OF POOR QUALITY

CA20 747/1 01 S1 ORBITER DATA (NGN057) (11 MAR 75)

REFERENCE DATA

SREF = 2690.0000 SQ.FT. XMRP = 1109.0000 IN.XO
LREF = 474.8100 IN. YMRP = .0000 IN.YO
BREF = 936.6800 IN. ZMRP = 375.0000 IN.ZO
SCALE = .0300

PARAMETRIC DATA

ELV-IB = .000 ELV-OB = 3.000
ELEVON = 5.000 MACH = .600
BETAO = .000 PHI = .000
DY = .000 BETAC = .000
DX = 20.000 ALPHAC = 8.000

RN/L = 3.24 GRADIENT INTERVAL = .00/ 12.00

ALPHAO = 6.000

DZ	CN	CA	CLM	CY	CBL	CYN	CL	CD	CSL	CLN
.000	-.00588	.02150	-.02742	-.00104	-.00223	-.00278	-.00810	.02077	-.00251	-.00253
3.000	.01417	.02174	-.02388	-.00094	-.00209	-.00253	.01182	.02310	-.00234	-.00230
7.500	.04011	.02234	-.02022	-.00059	-.00200	-.00223	.03756	.02641	-.00222	-.00201
15.000	.07564	.02364	-.01370	-.00014	-.00184	-.00191	.07275	.03142	-.00203	-.00171
30.000	.13755	.02582	-.00423	.00030	-.00154	-.00146	.13409	.04006	-.00168	-.00129
45.000	.19524	.02932	.00872	-.00109	-.00158	-.00070	.19110	.04957	-.00164	-.00053
60.000	.20789	.04017	.03628	-.01429	-.00577	.00452	.20255	.06168	-.00627	.00520
GRADIENT	.00610	.00011	.00095	.00006	.00003	.00007	.00606	.00075	.00004	.00007

RN/L = 3.27 GRADIENT INTERVAL = .00/ 12.00

ALPHAO = 10.000

DZ	CN	CA	CLM	CY	CBL	CYN	CL	CD	CSL	CLN
.000	.20138	.01260	.00838	-.00243	-.00263	-.00213	.19613	.04738	-.00295	-.00165
3.000	.22377	.01124	.00522	-.00258	-.00232	-.00174	.21841	.04992	-.00259	-.00131
7.500	.25298	.00954	.00421	-.00178	-.00224	-.00162	.24748	.05332	-.00248	-.00121
15.000	.29176	.00904	.00548	-.00198	-.00220	-.00133	.28576	.05957	-.00239	-.00093
30.000	.35895	.00621	.00521	-.00060	-.00187	-.00080	.35242	.06845	-.00198	-.00046
45.000	.39729	.00643	.01029	-.00042	-.00210	-.00082	.39014	.07532	-.00221	-.00044
60.000	.42335	.00822	.01521	-.00198	-.00296	.00047	.41549	.08161	-.00284	.00099
GRADIENT	.00685	-.00041	-.00053	.00009	.00005	.00006	.00682	.00079	.00006	.00005

RN/L = 3.29 GRADIENT INTERVAL = .00/ 12.00

ALPHAO = 14.000

DZ	CN	CA	CLM	CY	CBL	CYN	CL	CD	CSL	CLN
.000	.42211	-.01019	.03905	-.00164	-.00330	-.00147	.41204	.09223	-.00356	-.00063
3.000	.44528	-.01265	.03267	-.00181	-.00309	-.00120	.43511	.09545	-.00329	-.00042
7.500	.47614	-.01575	.02634	-.00211	-.00275	-.00073	.46580	.09991	-.00284	-.00005
15.000	.51302	-.01732	.02764	-.00200	-.00235	-.00045	.50197	.10731	-.00239	.00013
30.000	.57484	-.02010	.02542	-.00150	-.00308	.00039	.56263	.11957	-.00290	.00112
45.000	.61472	-.01975	.02341	-.00284	-.00165	.00114	.60124	.12955	-.00132	.00151
60.000	.64122	-.02258	.01814	-.00252	-.00071	.00203	.62763	.13321	-.00019	.00214
GRADIENT	.00718	-.00074	-.00167	-.00006	.00007	.00010	.00714	.00102	.00010	.00008

CA20 747/1 01 SI ORBITER DATA (NGN059) (11 MAR 75)

REFERENCE DATA

SREF = 2690.0000 SQ.FT. XMRP = 1109.0000 IN.XO
LREF = 474.8100 IN. YMRP = .0000 IN.YO
BREF = 936.6800 IN. ZMRP = 375.0000 IN.ZO
SCALE = .0300

PARAMETRIC DATA

ELV-IB =	.000	ELV-OB =	3.000
ELEVON =	5.000	MACH =	.600
BETAO =	.000	BETAC =	.000
PHI =	.000	DY =	10.000
DX =	.000	ALPHAC =	4.000

RN/L = 3.34 GRADIENT INTERVAL = .00/ 12.00

ALPHAO = 10.000

DZ	CN	CA	CLM	CY	CBL	CYN	CL	CD	CSL	CLN
.000	.40177	.00045	.05203	.00003	-.00946	-.00391	.39559	.07021	-.01000	-.00221
3.000	.41220	-.00148	.04291	.00007	-.00789	-.00375	.40620	.07013	-.00541	-.00233
7.500	.42158	-.00170	.03911	-.00091	-.00690	-.00306	.41545	.07153	-.00733	-.00182
15.000	.43846	-.00327	.03046	-.00162	-.00544	-.00208	.43236	.07292	-.00572	-.00110
30.000	.46142	-.00333	.02480	-.00054	-.00397	-.00056	.45499	.07685	-.00401	.00014
45.000	.47801	-.00383	.01685	.00022	-.00340	-.00004	.47141	.07923	-.00335	.00056
60.000	.49361	-.00389	.01388	.00147	-.00289	.00010	.48680	.08180	-.00283	.00060
GRADIENT	.00260	-.00027	-.00179	-.00021	.00033	.00012	.00260	.00019	.00035	.00006

RN/L = 3.24 GRADIENT INTERVAL = .00/ 12.00

ALPHAO = 14.000

DZ	CN	CA	CLM	CY	CBL	CYN	CL	CD	CSL	CLN
.000	.65835	-.01659	.06052	-.00832	-.00672	.00142	.64339	.14332	-.00617	.00301
3.000	.65879	-.01774	.05532	-.00708	-.00454	.00028	.64351	.14216	-.00434	.00136
7.500	.65986	-.01767	.05001	-.00594	-.00303	-.00050	.64463	.14251	-.00306	.00024
15.000	.66644	-.01682	.04276	-.00455	-.00304	-.00046	.65071	.14491	-.00306	.00029
30.000	.69180	-.01501	.03430	-.00163	-.00311	-.00001	.65441	.15019	-.00302	.00074
45.000	.69387	-.01523	.02754	.00054	-.00309	.00017	.67695	.15309	-.00286	.00091
60.000	.70279	-.01514	.02165	.00269	-.00309	.00060	.68557	.15533	-.00265	.00133
GRADIENT	.00014	-.00013	-.00138	.00031	.00048	-.00025	.00017	-.00009	.00040	-.00026

CA20 747/1 01 S1 ORBITER DATA (NGN0591 (11 MAR 75)

REFERENCE DATA

SREF = 2690.0000 SQ.FT. XMRP = 1109.0000 IN.XO
LREF = 474.8100 IN. YMRP = .0000 IN.YO
BREF = 936.6800 IN. ZMRP = 375.0000 IN.ZO
SCALE = .0300

PARAMETRIC DATA

ELV-IB = .000 ELV-OB = 3.000
ELEVON = 5.000 MACH = .600
BETAO = .000 BETAC = .000
PHI = .000 DY = 10.000
DX = 10.000 ALPHAC = 4.000

RN/L = 3.32 GRADIENT INTERVAL = .00/ 12.00

ALPHAO = 10.000

DZ	CN	CA	CLM	CY	CBL	CYN	CL	CD	CSL	CLN
.000	.37910	.00121	.03833	.00012	-.00881	-.00428	.37313	.06702	-.00942	-.00269
3.000	.38956	-.00055	.03149	-.00039	-.00752	-.00408	.38374	.06711	-.00812	-.00271
7.500	.40116	-.00150	.02765	-.00166	-.00673	-.00307	.39533	.06819	-.00716	-.00185
15.000	.41923	-.00301	.02309	-.00140	-.00554	-.00240	.41338	.06984	-.00587	-.00140
30.000	.44931	-.00505	.01746	-.00137	-.00402	-.00069	.44336	.07305	-.00408	.00001
45.000	.46672	-.00524	.01506	-.00020	-.00349	-.00012	.46054	.07589	-.00345	.00049
60.000	.48212	-.00460	.01397	.00128	-.00290	.00021	.47559	.07919	-.00282	.00071
GRADIENT	.00291	-.00035	-.00138	-.00024	.00027	.00017	.00293	.00016	.00029	.00012

RN/L = 3.25 GRADIENT INTERVAL = .00/ 12.00

ALPHAO = 14.000

DZ	CN	CA	CLM	CY	CBL	CYN	CL	CD	CSL	CLN
.000	.62189	-.02017	.05914	-.00522	-.00725	.00042	.60829	.13088	-.00693	.00217
3.000	.62950	-.02286	.04985	-.00512	-.00454	-.00029	.61633	.13011	-.00447	.00082
7.500	.63933	-.02438	.04376	-.00520	-.00292	-.00010	.62623	.13101	-.00286	.00061
15.000	.65059	-.02283	.04078	-.00483	-.00146	.00047	.63679	.13524	-.00130	.00081
30.000	.67413	-.02098	.03159	-.00097	-.00266	.00018	.65919	.14273	-.00254	.00082
45.000	.68796	-.01997	.02541	.00097	-.00270	.00058	.67235	.14706	-.00248	.00122
60.000	.70087	-.02003	.02132	.00341	-.00298	.00073	.68490	.15012	-.00271	.00143
GRADIENT	.00231	-.00054	-.00200	.00000	.00056	-.00006	.00238	.00003	.00053	-.00019

CA20 747/1 01 S1 ORBITER DATA (NGN080) (11 MAR 75)

REFERENCE DATA

SREF =	2690.0000 SQ.FT.	XMRP =	1109.0000 IN.XO		
LREF =	474.8100 IN.	YMRP =	.0000 IN.YO		
BREF =	936.6800 IN.	ZMRP =	375.0000 IN.ZO		
SCALE =	.0300				

PARAMETRIC DATA

ELV-IB =	.000	ELV-OB =	3.000
ELEVON =	5.000	MACH =	.600
BETAO =	.000	BETAC =	.000
PHI =	.000	DY =	10.000
DX =	.000	ALPHAC =	8.000

RN/L = 3.23 GRADIENT INTERVAL = .00/ 12.00

ALPHAO = 10.000

DZ	CN	CA	CLM	CY	CBL	CYN	CL	CD	CSL	CLN
.000	.25105	.00627	.04045	.00721	-.01177	-.00594	.24615	.04977	-.01262	-.00380
3.000	.27309	.00548	.03706	.00385	-.01036	-.00543	.26799	.05222	-.01115	-.00355
7.500	.29650	.00519	.03544	.00151	-.00906	-.00496	.29109	.05660	-.00979	-.00331
15.000	.33440	.00326	.03086	-.00093	-.00745	-.00377	.32875	.06128	-.00799	-.00242
30.000	.38641	.00109	.02433	-.00071	-.00565	-.00190	.38232	.06853	-.00590	-.00088
45.000	.42054	.00054	.02081	-.00035	-.00470	-.00086	.41405	.07355	-.00478	-.00003
60.000	.45030	.00024	.01873	.00026	-.00398	-.00007	.44342	.07843	-.00393	.00052
GRADIENT	.00599	-.00014	-.00064	-.00074	.00036	.00013	.00593	.00090	.00037	.00006

RN/L = 3.20 GRADIENT INTERVAL = .00/ 12.00

ALPHAO = 14.000

DZ	CN	CA	CLM	CY	CBL	CYN	CL	CD	CSL	CLN
.000	.49287	-.01255	.06960	.00406	-.01275	-.00300	.48127	.10706	-.01309	.00017
3.000	.51343	-.01513	.06160	.00150	-.01016	-.00275	.50184	.10953	-.01052	-.00021
7.500	.53730	-.01782	.05454	-.00129	-.00935	-.00214	.52565	.11269	-.00863	-.00005
15.000	.56682	-.01800	.05107	-.00315	-.00580	-.00101	.55434	.11966	-.00598	.00042
30.000	.61602	-.01938	.03997	-.00383	-.00281	.00073	.60241	.13022	-.00255	.00139
45.000	.64907	-.01969	.03252	-.00278	-.00142	.00131	.63455	.13791	-.00106	.00162
60.000	.67088	-.01953	.02757	.00018	-.00117	.00160	.65569	.14335	-.00075	.00183
GRADIENT	.00587	-.00069	-.00197	-.00071	.00057	.00012	.00587	.00075	.00058	-.00003

CA20 747/1 01 SI ORBITER DATA (NGN061) (11 MAR 75)

REFERENCE DATA

SREF = 2690.0000 SQ.FT. XMRP = 1109.0000 IN.XO
LREF = 474.8100 IN. YMRP = .0000 IN.YO
BREF = 936.6800 IN. ZMRP = 375.0000 IN.ZO
SCALE = .0300

PARAMETRIC DATA

ELV-IB =	.000	ELV-OB =	3.000
ELEVON =	5.000	MACH =	.600
BETAO =	.000	BETAC =	.000
PHI =	.000	DY =	10.000
DX =	10.000	ALPHAC =	8.000

RN/L = 3.28 GRADIENT INTERVAL = .00/ 12.00

ALPHAO = 10.000

DZ	CN	CA	CLM	CY	CBL	CYN	CL	CD	CSL	CLN
.000	.22734	.00794	.02214	.00545	-.01059	-.00559	.22251	.04730	-.01140	-.00366
3.000	.24592	.00713	.02087	.00307	-.00953	-.00534	.24094	.04973	-.01031	-.00360
7.500	.27088	.00572	.01979	.00089	-.00846	-.00497	.26577	.05267	-.00919	-.00342
15.000	.31112	.00322	.01755	-.00116	-.00700	-.00366	.30594	.05720	-.00753	-.00239
30.000	.36638	.00132	.01766	-.00058	-.00541	-.00186	.36059	.06492	-.00555	-.00089
45.000	.39975	.00059	.01751	.00041	-.00489	-.00111	.39357	.07000	-.00501	-.00024
60.000	.42580	.00054	.01897	.00189	-.00470	-.00062	.41924	.07448	-.00474	.00020
GRADIENT	.00578	-.00030	-.00031	-.00060	.00028	.00008	.00575	.00071	.00029	.00003

RN/L = 3.26 GRADIENT INTERVAL = .00/ 12.00

ALPHAO = 14.000

DZ	CN	CA	CLM	CY	CBL	CYN	CL	CD	CSL	CLN
.000	.47253	-.01618	.05039	.00781	-.01305	-.00554	.46241	.09861	-.01400	-.00222
3.000	.49151	-.01801	.04574	.00608	-.01114	-.00545	.48127	.10143	-.01213	-.00259
7.500	.51636	-.02073	.04173	.00199	-.00998	-.00358	.50603	.10480	-.01055	-.00106
15.000	.54932	-.02264	.03845	-.00086	-.00731	-.00196	.53848	.11093	-.00757	-.00013
30.000	.60072	-.02411	.03604	-.00190	-.00399	.00052	.58871	.12194	-.00374	.00147
45.000	.64141	-.02666	.02863	-.00290	-.00085	.00181	.62881	.12930	-.00040	.00197
60.000	.66580	-.02616	.02723	.00008	.00035	.00230	.65235	.13569	.00089	.00215
GRADIENT	.00582	-.00061	-.00113	-.00079	.00040	.00027	.00579	.00082	.00045	.00017

CA20 747/1 01 S1 ORBITER DATA (NGN062) (11 MAR 75)

REFERENCE DATA

SREF =	2690.0000 SQ.FT.	XMRP =	1109.0000 IN.XO		
LREF =	474.8100 IN.	YMRP =	.0000 IN.YO		
BREF =	936.6800 IN.	ZMRP =	375.0000 IN.ZO		
SCALE =	.0300				

PARAMETRIC DATA

ELV-IB =	.000	ELV-OB =	3.000
ELEVON =	5.000	MACH =	.600
BETAO =	.000	BETAC =	-5.000
PHI =	.000	DY =	.000
DX =	.000	ALPHAC =	4.000

RN/L = 3.22 GRADIENT INTERVAL = .00/ 12.00

ALPHAO = 10.000

DZ	CN	CA	CLM	CY	CBL	CYN	CL	CD	CSL	CLN
.000	.37094	.00702	.06437	-.01556	.00506	.00285	.36409	.07132	.00548	.00193
3.000	.39351	.00323	.04588	-.01156	.00292	.00209	.38697	.07151	.00324	.00155
7.500	.40824	.00212	.03883	-.00651	.00177	.00124	.40167	.07253	.00195	.00091
15.000	.42687	.00006	.02932	-.00300	.00050	.00092	.42234	.07453	.00065	.00022
30.000	.45738	-.00052	.02087	-.00012	-.00054	.00054	.45053	.07691	-.00049	.00062
45.000	.47633	-.00135	.01431	.00052	-.00131	-.00010	.46933	.08139	-.00130	.00013
60.000	.49779	-.00237	.00635	.00139	-.00252	-.00067	.49054	.06411	-.00260	-.00022
GRADIENT	.00464	-.00062	-.00326	.00120	-.00042	-.00021	.00487	.00023	-.00045	-.00014

RN/L = 3.23 GRADIENT INTERVAL = .00/ 12.00

ALPHAO = 14.000

DZ	CN	CA	CLM	CY	CBL	CYN	CL	CD	CSL	CLN
.000	.62218	-.00277	.08781	-.01138	.00472	.00174	.60437	.14783	.00500	.00055
3.000	.63772	-.00770	.06542	-.01022	.00260	.00211	.62064	.14680	.00303	.00142
7.500	.64831	-.01062	.05237	-.00635	.00089	.00133	.63162	.14654	.00119	.00107
15.000	.65941	-.01121	.04361	-.00213	-.00033	.00042	.64253	.14865	-.00022	.00049
30.000	.68253	-.01181	.03121	.00104	-.00130	.00008	.66511	.15365	-.00124	.00039
45.000	.69706	-.01213	.02430	.00128	-.00167	-.00006	.67929	.15697	-.00163	.00034
60.000	.70713	-.01305	.01694	.00219	-.00185	.00034	.68928	.15641	-.00172	.00078
GRADIENT	.00340	-.00101	-.00459	.00069	-.00050	-.00006	.00354	-.00016	-.00050	.00056

ORIGINAL PAGE IS
OF POOR QUALITY

CA20 747/1 01 SI ORBITER DATA (NGN063) (11 MAR 75)

REFERENCE DATA

SREF = 2690.0000 SQ.FT. XMRP = 1109.0000 IN.XO
LREF = 474.8100 IN. YMRP = .0000 IN.YO
BREF = 936.6900 IN. ZMRP = 375.0000 IN.ZO
SCALE = .0300

PARAMETRIC DATA

ELV-IB = .000 ELV-OB = 3.000
ELEVON = 5.000 MACH = .600
BETAO = .000 BETAC = -5.000
PHI = .000 DY = .000
DX = 10.000 ALPHAC = 4.000

RN/L = 3.30 GRADIENT INTERVAL = .00/ 12.00

ALPHAO = 10.000

DZ	CN	CA	CLM	CY	CBL	CYN	CL	CD	CSL	CLN
.000	.34357	.00934	.05058	-.01676	.00653	.00268	.33673	.06986	.00690	.00150
3.000	.36919	.00542	.03204	-.01294	.00420	.00192	.36264	.06944	.00447	.00118
7.500	.39706	.00302	.02465	-.00845	.00279	.00113	.39065	.07018	.00295	.00063
15.000	.40879	.00225	.02005	-.00501	.00128	.00084	.40219	.07320	.00140	.00060
30.000	.44363	.00057	.01331	-.00239	-.00005	.00071	.43677	.07769	.00008	.00070
45.000	.46478	.00026	.00897	-.00110	-.00109	.00014	.45768	.08097	-.00105	.00033
60.000	.48208	.00030	.00815	-.00018	-.00210	-.00002	.47470	.08401	-.00207	.00034
GRADIENT	.00565	-.00082	-.00331	.00110	-.00048	-.00020	.00571	.00018	-.00051	-.00012

RN/L = 3.27 GRADIENT INTERVAL = .00/ 12.00

ALPHAO = 14.000

DZ	CN	CA	CLM	CY	CBL	CYN	CL	CD	CSL	CLN
.000	.57655	-.00514	.09070	-.01271	.00677	.00208	.56067	.13449	.00708	.00039
3.000	.60577	-.01192	.06177	-.01188	.00486	.00221	.59066	.13499	.00525	.00055
7.500	.62435	-.01521	.04565	-.00873	.00296	.00156	.60948	.13629	.00325	.00080
15.000	.63975	-.01513	.03826	-.00487	.00069	.00079	.62441	.14009	.00085	.00060
30.000	.67063	-.01544	.02712	-.00242	.00012	.00068	.65445	.14726	.00028	.00063
45.000	.68764	-.01445	.02276	-.00160	-.00061	.00040	.67071	.15234	-.00050	.00053
60.000	.69976	-.01418	.01892	.00018	-.00140	.00060	.68241	.15552	-.00121	.00092
GRADIENT	.00620	-.00129	-.00582	.00054	-.00050	-.00008	.00632	.00024	-.00051	.00005

CA20 747/1 01 SI ORBITER DATA (NGN064) (11 MAR 75)

REFERENCE DATA

SREF = 2690.0000 SQ.FT. XMRP = 1109.0000 IN.XO
LREF = 474.8100 IN. YMRP = .0000 IN.YO
BREF = 936.6800 IN. ZMRP = 375.0000 IN.ZO
SCALE = .0300

PARAMETRIC DATA

ELV-IB = .000 ELV-OB = 3.000
ELEVON = 5.000 MACH = .500
BETAO = .000 PHI = .000
DY = .000 BETAC = -5.000
DX = 20.000 ALPHAC = 4.000

RN/L = 3.30 GRADIENT INTERVAL = .00/ 12.00

ALPHAO = 10.000

DZ	CN	CA	CLM	CY	CBL	CYN	CL	CD	CSL	CLN
.000	.34935	.00627	.02421	-.00650	.00483	-.00224	.34296	.06684	.00437	-.00305
3.000	.36380	.00475	.01838	-.00599	.00366	-.00158	.35745	.06765	.00333	-.00219
7.500	.36499	.00247	.01062	-.00531	.00198	-.00038	.37871	.06929	.00169	-.00072
15.000	.40283	.00252	.01228	-.00322	.00054	-.00020	.39808	.07240	.00049	-.00029
30.000	.43669	.00145	.01209	-.00128	-.00056	.00010	.42882	.07709	-.00093	.00026
45.000	.45773	.00046	.01002	.00021	-.00170	-.00003	.45069	.07993	-.00168	.00027
60.000	.48064	-.00142	.00597	.00139	-.00255	.00006	.47358	.08206	-.00250	.00050
GRADIENT	.00475	-.00051	-.00181	.00016	-.00038	.00025	.00476	.00033	-.00033	.00031

RN/L = 3.30 GRADIENT INTERVAL = .00/ 12.00

ALPHAO = 14.000

DZ	CN	CA	CLM	CY	CBL	CYN	CL	CD	CSL	CLN
.000	.59391	-.02126	.03872	-.00612	.00393	-.00107	.59141	.12305	.00355	-.00198
3.000	.60501	-.02255	.03502	-.00537	.00342	-.00075	.59249	.12449	.00314	-.00155
7.500	.61698	-.02268	.03239	-.00511	.00274	-.00007	.60414	.12726	.00265	-.00073
15.000	.63673	-.02290	.02835	-.00470	.00196	.00091	.62335	.13182	.00213	.00041
30.000	.66459	-.02008	.02560	-.00289	.00130	.00123	.64971	.14129	.00155	.00088
45.000	.68226	-.01819	.02233	-.00005	-.00073	.00019	.66640	.14740	-.00065	.00035
60.000	.69303	-.01602	.01992	.00364	-.00281	-.00010	.67632	.15211	-.00275	.00059
GRADIENT	.00304	-.00018	-.00082	.00013	-.00016	.00013	.00300	.00056	-.00012	.00017

CA20 747/1 01 SI ORBITER DATA (NGN065) (11 MAR 75)

REFERENCE DATA

SREF = 2690.0000 SQ.FT. XMRP = 1109.0000 IN.XO
LREF = 474.8100 IN. YMRP = .0000 IN.YO
BREF = 936.6800 IN. ZMRP = 375.0000 IN.ZO
SCALE = .0300

PARAMETRIC DATA

ELV-IB = .000 ELV-OB = 3.000
ELEVON = 5.000 MACH = .600
BETAO = .000 BETAC = -5.000
PHI = .000 DY = .000
DX = .000 ALPHAC = 8.000

RN/L = 3.22 GRADIENT INTERVAL = .00/ 12.00

ALPHAO = 10.000

DZ	CN	CA	CLM	CY	CBL	CYN	CL	CD	CSL	CLN
.000	.20961	.01331	.04189	-.02156	.00618	-.00107	.20411	.04951	.00590	-.00212
3.000	.23965	.01192	.03602	-.01596	.00386	-.00037	.23394	.05336	.00374	-.00104
7.500	.27058	.01062	.03244	-.01046	.00239	-.00005	.26463	.05744	.00234	-.00046
15.000	.31596	.00814	.02571	-.00542	.00051	.00018	.30974	.06289	.00053	.00009
30.000	.37607	.00640	.02083	-.00204	-.00070	.00018	.36925	.07161	-.00066	.00030
45.000	.41487	.00496	.01510	-.00121	-.00155	-.00027	.40770	.07692	-.00157	.00000
60.000	.44828	.00413	.01126	.00010	-.00236	-.00002	.44075	.08191	-.00233	.00039
GRADIENT	.00803	-.00035	-.00122	.00146	-.00049	.00013	.00797	.00105	-.00046	.00021

RN/L = 3.23 GRADIENT INTERVAL = .00/ 12.00

ALPHAO = 14.000

DZ	CN	CA	CLM	CY	CBL	CYN	CL	CD	CSL	CLN
.000	.46077	-.00722	.08214	-.02481	.00589	.00230	.44883	.10446	.00628	.00081
3.000	.49570	-.01178	.06176	-.01855	.00351	.00189	.48382	.10849	.00386	.00099
7.500	.52091	-.01343	.05550	-.01252	.00195	.00160	.50868	.11299	.00229	.00107
15.000	.55614	-.01401	.04863	-.00820	.00155	.00181	.54301	.12095	.00154	.00139
30.000	.61291	-.01516	.03544	-.00356	.00073	.00143	.59837	.13357	.00106	.00121
45.000	.64583	-.01497	.02881	-.00324	.00023	.00100	.63027	.14171	.00047	.00092
60.000	.66945	-.01507	.02321	-.00137	-.00029	.00143	.65321	.14733	.00006	.00146
GRADIENT	.00783	-.00079	-.00338	.00162	-.00051	-.00009	.00779	.00113	-.00052	.00003

CA20 747/1 01 S1 ORBITER DATA (NSN066) (11 MAR 75)

REFERENCE DATA

SREF = 2690.0000 SQ.FT. XMRP = 1109.0000 IN.XO
LREF = 474.8100 IN. YMRP = .0000 IN.YO
BREF = 936.6900 IN. ZMRP = 375.0000 IN.ZO
SCALE = .0300

PARAMETRIC DATA

ELV-IB =	.000	ELV-OB =	3.000
ELEVON =	5.000	MACH =	.600
BETAO =	.000	BETAC =	-5.000
PHI =	.000	DY =	.000
DX =	10.000	ALPHAC =	8.000

RN/L = 3.24 GRADIENT INTERVAL = .00/ 12.00

ALPHAO = 10.000

DZ	CN	CA	CLM	CY	CBL	CYN	CL	CD	CSL	CLN
.000	.19850	.01384	.02080	-.02174	.00694	-.00110	.19311	.04790	.00654	-.00229
3.000	.22536	.01209	.01539	-.01720	.00517	-.00024	.22043	.05115	.00505	-.00113
7.500	.25401	.01095	.01612	-.01225	.00373	.00017	.24825	.05490	.00371	-.00048
15.000	.29977	.00871	.01240	-.00594	.00138	.00028	.29371	.06063	.00140	.00002
30.000	.36378	.00725	.01232	-.00324	.00004	.00015	.35700	.07031	.00006	.00014
45.000	.40803	.00620	.01071	-.00144	-.00109	-.00024	.39878	.07661	-.00111	-.00005
60.000	.43753	.00518	.01069	-.00001	-.00205	-.00020	.42981	.08206	-.00206	.00016
GRADIENT	.00731	-.00035	-.00057	.00125	-.00042	.00016	.00726	.00092	-.00039	.00023

RN/L = 3.25 GRADIENT INTERVAL = .00/ 12.00

ALPHAO = 14.000

DZ	CN	CA	CLM	CY	CBL	CYN	CL	CD	CSL	CLN
.000	.42928	-.00617	.06039	-.02511	.00731	.00223	.41603	.09786	.00763	.00040
3.000	.46154	-.01047	.04595	-.01924	.00532	.00169	.45036	.10150	.00555	.00034
7.500	.49765	-.01237	.04190	-.01374	.00375	.00144	.47635	.10601	.00393	.00049
15.000	.52916	-.01505	.03732	-.00892	.00201	.00140	.51708	.11341	.00229	.00089
30.000	.59359	-.01646	.03070	-.00452	.00034	.00128	.57993	.12763	.00064	.00116
45.000	.63339	-.01657	.02544	-.00323	-.00049	.00113	.61658	.13715	-.00020	.00121
60.000	.67049	-.01742	.02305	-.00155	-.00059	.00206	.65479	.14531	-.00042	.00223
GRADIENT	.00765	-.00080	-.00234	.00149	-.00047	-.00010	.00762	.00108	-.00048	.00001

DATE 04 DEC 75 TABULATED SOURCE DATA - CA20

CA20 747/1 01 SI ORBITER DATA (NGN067) (11 MAR 75)

REFERENCE DATA

SREF =	2690.0000 SQ.FT.	XMRP =	1109.0000 IN.XO
LREF =	474.8100 IN.	YMRP =	.0000 IN.YO
BREF =	936.6800 IN.	ZMRP =	375.0000 IN.ZO
SCALE =	.0300		

PARAMETRIC DATA

ELV-IB =	.000	ELV-OB =	3.000
ELEVON =	5.000	MACH =	.600
BETAD =	.000	PHI =	.000
DY =	.000	BETAC =	-5.000
DX =	20.000	ALPHAC =	8.000

RN/L = 3.28 GRADIENT INTERVAL = .00/ 12.00

ALPHAO = 10.000

DZ	CN	CA	CLM	CY	CBL	CYN	CL	CD	CSL	CLN
.000	.20044	.01207	.00330	-.01277	.00502	-.00302	.19530	.04659	.00442	-.00385
3.000	.22964	.00967	-.00406	-.01107	.00338	-.00138	.22447	.04940	.00309	-.00195
7.500	.25283	.00980	.00152	-.00746	.00197	-.00106	.24729	.05356	.00176	-.00138
15.000	.29213	.00854	.00546	-.00408	.00049	-.00078	.28621	.05914	.00034	-.00085
30.000	.35596	.00553	.00606	-.00116	-.00062	-.00029	.34950	.06726	-.00065	-.00018
45.000	.39667	.00491	.00921	.00049	-.00161	-.00053	.38980	.07371	-.00168	-.00024
60.000	.42294	.00533	.01335	.00101	-.00248	-.00050	.41559	.07870	-.00253	-.00007
GRADIENT	.00684	-.00028	-.00012	.00072	-.00040	.00025	.00678	.00092	-.00035	.00031

RN/L = 3.29 GRADIENT INTERVAL = .00/ 12.00

ALPHAO = 14.000

DZ	CN	CA	CLM	CY	CBL	CYN	CL	CD	CSL	CLN
.000	.43420	-.01082	.03014	-.01262	.00436	-.00177	.42392	.09454	.00380	-.00277
3.000	.45291	-.01220	.02694	-.01082	.00303	-.00080	.44241	.09773	.00275	-.00151
7.500	.48745	-.01402	.02397	-.00816	.00148	.00002	.46957	.10263	.00144	-.00054
15.000	.51697	-.01648	.02591	-.00514	.00058	.00027	.50551	.10905	.00062	.00012
30.000	.57787	-.02017	.02811	-.00230	-.00126	.00063	.55558	.12023	-.00107	.00092
45.000	.62259	-.02093	.02459	-.00168	-.00148	.00131	.60914	.13041	-.00112	.00163
60.000	.66739	-.02330	.02401	-.00137	-.00049	.00292	.65321	.13885	.00023	.00295
GRADIENT	.00616	-.00042	-.00081	.00059	-.00038	.00023	.00608	.00108	-.00031	.00032

CA20 747/1 01 S1 ORBITER DATA (NGN069) (11 MAR 75)

REFERENCE DATA

SREF =	2690.0000 SQ.FT.	XMRP =	1109.0000 IN.XO		
LREF =	474.8100 IN.	YMRP =	.0000 IN.YO		
BREF =	936.6800 IN.	ZMRP =	375.0000 IN.ZO		
SCALE =	.0300				

PARAMETRIC DATA

ELV-IB =	.000	ELV-OB =	3.000
ELEVON =	5.000	MACH =	.600
BETAO =	.000	BETAC =	-5.000
PHI =	.000	DY =	10.000
DX =	.000	ALPHAC =	4.000

RN/L = 3.29 GRADIENT INTERVAL = .00/ 12.00

ALPHAO = 10.000

DZ	CN	CA	CLM	CY	CBL	CYN	CL	CD	CSL	CLN
.000	.40318	.00155	.04591	-.00644	-.00347	-.00196	.39679	.07154	-.00378	-.00133
3.000	.41269	-.00004	.03762	-.00578	-.00347	-.00148	.40634	.07161	-.00357	-.00085
7.500	.42265	-.00147	.03328	-.00542	-.00345	-.00125	.41649	.07154	-.00351	-.00063
15.000	.43706	-.00215	.02922	-.00334	-.00316	-.00066	.43079	.07378	-.00323	-.00010
30.000	.46105	-.00293	.02347	-.00121	-.00276	.00008	.45456	.07717	-.00271	.00056
45.000	.47751	-.00380	.01827	.00017	-.00273	.00037	.47092	.07917	-.00262	.00084
60.000	.48578	-.00517	.01265	.00143	-.00274	.00052	.48915	.08100	-.00261	.00099
GRADIENT	.00257	-.00040	-.00163	.00015	.00000	.00009	.00260	.00005	.00002	.00009

RN/L = 3.22 GRADIENT INTERVAL = .00/ 12.00

ALPHAO = 14.000

DZ	CN	CA	CLM	CY	CBL	CYN	CL	CD	CSL	CLN
.000	.65831	-.01052	.06156	-.01323	-.00082	.00169	.63935	.14857	-.00039	.00183
3.000	.65459	-.01493	.04630	-.01187	-.00100	.00107	.64646	.14629	-.00071	.00128
7.500	.65404	-.01634	.04057	-.00906	-.00153	.00030	.64826	.14479	-.00142	.00086
15.000	.65400	-.01512	.04082	-.00548	-.00220	.00009	.64793	.14597	-.00211	.00062
30.000	.68912	-.01478	.03336	-.00110	-.00269	.00027	.65350	.15019	-.00254	.00091
45.000	.69357	-.01504	.02686	.00113	-.00279	.00048	.67670	.15322	-.00259	.00115
60.000	.70264	-.01501	.02164	.00325	-.00288	.00076	.65540	.15542	-.00261	.00143
GRADIENT	.00094	-.00074	-.00269	.00056	-.00010	-.00018	.00109	-.00049	-.00014	-.00015

CA20 747/1 01 S1 ORBITER DATA (NGN069) (11 MAR 75)

REFERENCE DATA

SREF = 2690.0000 SQ.FT. XMRP = 1109.0000 IN.XO
LREF = 474.8100 IN. YMRP = .0000 IN.YO
BREF = 936.6800 IN. ZMRP = 375.0000 IN.ZO
SCALE = .0300

PARAMETRIC DATA

ELV-IB =	.000	ELV-OB =	3.000
ELEVON =	5.000	MACH =	.600
BETAO =	.000	BETAC =	-5.000
PHI =	.000	DY =	10.000
DX =	10.000	ALPHAC =	4.000

RN/L = 3.25 GRADIENT INTERVAL = .00/ 12.00

ALPHAO = 10.000

DZ	CN	CA	CLM	CY	CBL	CYN	CL	CD	CSL	CLN
.000	.37570	.00189	.03513	-.00668	-.00187	-.00204	.36966	.06710	-.00219	-.00168
3.000	.39144	-.00106	.02423	-.00707	-.00227	-.00149	.38569	.06693	-.00250	-.00108
7.500	.40008	-.00158	.02427	-.00535	-.00265	-.00138	.39428	.06792	-.00285	-.00099
15.000	.42183	-.00449	.01836	-.00408	-.00275	-.00078	.41620	.06893	-.00285	-.00029
30.000	.44686	-.00543	.01728	-.00135	-.00263	.00001	.44102	.07225	-.00259	.00046
45.000	.46485	-.00564	.01528	.00014	-.00271	.00025	.45977	.07518	-.00262	.00072
60.000	.48467	-.00538	.01198	.00055	-.00259	.00024	.47842	.07788	-.00251	.00069
GRADIENT	.00315	-.00044	-.00133	.00019	-.00010	.00008	.00317	.00012	-.00009	.00010

RN/L = 3.25 GRADIENT INTERVAL = .00/ 12.00

ALPHAO = 14.000

DZ	CN	CA	CLM	CY	CBL	CYN	CL	CD	CSL	CLN
.000	.62119	-.01759	.05761	-.00872	.00073	.00037	.60699	.13321	.00080	.00019
3.000	.63755	-.02255	.04010	-.01064	.00093	.00132	.62407	.13236	.00122	.00106
7.500	.64329	-.02339	.03593	-.00898	.00067	.00121	.62984	.13293	.00094	.00101
15.000	.65053	-.02155	.03627	-.00542	.00000	.00089	.63642	.13547	.00032	.00087
30.000	.67291	-.02059	.02898	-.00076	-.00190	.00061	.65790	.14283	-.00169	.00105
45.000	.69814	-.01974	.02497	.00156	-.00233	.00056	.67247	.14732	-.00213	.00111
60.000	.69856	-.01942	.02132	.00384	-.00280	.00069	.69251	.15015	-.00255	.00134
GRADIENT	.00282	-.00073	-.00274	-.00000	-.00001	.00010	.00291	-.00002	.00001	.00010

CA20 747/1 01 SI ORBITER DATA (NGN070) (11 MAR 75)

REFERENCE DATA

SREF = [illegible].0000 SQ.FT. XBRP = 30.0000 IN.XO
LREF = 474.0100 IN. YBRP = .0000 IN.YO
BREF = 935.8800 IN. ZBRP = 575.0000 IN.ZO
SCALE = .0300

PARAMETRIC DATA

ELV-IB =	.000	ELV-OB =	3.000
ELEVON =	5.000	MACH =	.600
BETAO =	.000	BETAC =	-5.000
PHI =	.000	DY =	10.000
DX =	.000	ALPHAC =	8.000

CN/L = 3.28 GRADIENT INTERVAL = .00/ 12.00

ALPHAO = 10.000

DZ	CN	CA	CLM	CY	CBL	CYN	CL	CD	CSL	CLN
.000	.63104	.00240	.05430	-.00479	-.00478	-.00481	.24577	.05186	-.00554	-.00391
3.000	.67024	.00775	.03361	-.00522	-.00521	-.00448	.26478	.05456	-.00580	-.00351
7.500	.69323	.00670	.03275	-.00459	-.00528	-.00395	.28764	.05753	-.00589	-.00288
15.000	.72346	.00436	.02799	-.00413	-.00498	-.00269	.32666	.06203	-.00537	-.00178
30.000	.75435	.00245	.02551	-.00155	-.00434	-.00128	.37809	.06915	-.00450	-.00050
45.000	.78058	.00009	.01912	-.00020	-.00387	-.00065	.41417	.07312	-.00392	.00004
60.000	.79484	-.00182	.01434	.00115	-.00360	.00003	.44805	.07716	-.00354	.00065
GRADIENT	.00559	-.00023	-.00021	.00004	-.00006	.00011	.00554	.00075	-.00004	.00012

RN/L = 3.21 GRADIENT INTERVAL = .00/ 12.00

ALPHAO = 14.000

DZ	CN	CA	CLM	CY	CBL	CYN	CL	CD	CSL	CLN
.000	.51216	-.01576	.06241	-.00228	-.00499	-.00184	.50076	.10651	-.00529	-.00059
3.000	.52511	-.01659	.04883	-.00911	-.00447	-.00148	.51353	.11095	-.00470	-.00036
7.500	.53956	-.01693	.04872	-.00852	-.00431	-.00090	.52763	.11405	-.00440	.00017
15.000	.55811	-.01648	.04570	-.00689	-.00360	-.00013	.55571	.11951	-.00353	.00075
30.000	.61493	-.01879	.03920	-.00419	-.00173	.00102	.60126	.13054	-.00143	.00141
45.000	.64722	-.01888	.03278	-.00199	-.00109	.00144	.63255	.13926	-.00071	.00166
60.000	.66979	-.01888	.02676	.00076	-.00097	.00149	.65349	.14347	-.00058	.00169
GRADIENT	.00362	-.00016	-.00046	-.00002	.00009	.00013	.00355	.00072	.00011	.00010

ORIGINAL PAGE IS
OF POOR QUALITY

CA20 747/1 01 S1 ORBITER DATA (NGN071) (11 MAR 75)

REFERENCE DATA

SREF = 2690.0000 SQ.FT. XMRP = 1109.0000 IN.XO
LREF = 474.8100 IN. YMRP = .0000 IN.YO
BREF = 936.6800 IN. ZMRP = 375.0000 IN.ZO
SCALE = .0300

PARAMETRIC DATA

ELV-IB =	.000	ELV-OB =	3.000
ELEVON =	5.000	MACH =	.600
BETAO =	.000	BETAC =	-5.000
PHI =	.000	DY =	10.000
DX =	10.000	ALPHAC =	8.000

RN/L = 3.25 GRADIENT INTERVAL = .00/ 12.00

ALPHAO = 10.000

DZ	CN	CA	CLM	CY	CBL	CYN	CL	CD	CSL	CLN
.000	.22419	.00893	.01584	-.00545	-.00303	-.00408	.21924	.04773	-.00369	-.00350
3.000	.24371	.00757	.01575	-.00532	-.00342	-.00393	.23869	.04977	-.00405	-.00328
7.500	.26951	.00591	.01586	-.00482	-.00364	-.00349	.26438	.05262	-.00419	-.00280
15.000	.30686	.00445	.01699	-.00390	-.00401	-.00242	.30142	.05767	-.00437	-.00169
30.000	.36261	.00196	.01810	-.00097	-.00377	-.00135	.35576	.06490	-.00394	-.00068
45.000	.40269	-.00022	.01539	.00075	-.00368	-.00098	.39561	.06971	-.00379	-.00031
60.000	.43496	-.00125	.01580	.00229	-.00387	-.00037	.42857	.07430	-.00388	.00031
GRADIENT	.00602	-.00040	.00001	.00109	-.00008	.00008	.00600	.00065	-.00006	.00009

RN/L = 3.25 GRADIENT INTERVAL = .00/ 12.00

ALPHAO = 14.000

DZ	CN	CA	CLM	CY	CBL	CYN	CL	CD	CSL	CLN
.000	.47888	-.01803	.03695	-.00635	-.00454	-.00271	.46901	.09835	-.00506	-.00154
3.000	.49771	-.02019	.03243	-.00648	-.00469	-.00235	.48781	.10081	-.00512	-.00115
7.500	.51814	-.02141	.03283	-.00541	-.00493	-.00180	.50793	.10457	-.00522	-.00055
15.000	.54670	-.02166	.03553	-.00462	-.00433	-.00064	.53570	.11125	-.00435	.00043
30.000	.59900	-.02393	.03277	-.00284	-.00245	.00101	.58599	.12169	-.00213	.00157
45.000	.63673	-.02384	.03060	-.00212	-.00059	.00176	.62358	.13091	-.00015	.00165
60.000	.66513	-.02439	.03660	.00047	.00030	.00210	.65128	.13724	.00080	.00196
GRADIENT	.00518	-.00044	-.00050	.00013	-.00005	.00012	.00513	.00083	-.00002	.00013

CA20 747/1 01 SI ORBITER DATA (NGN072) (11 MAR 75)

REFERENCE DATA

SREF = 2690.0000 SQ.FT. XMRP = 1109.0000 IN.XO
LREF = 474.8100 IN. YMRP = .0000 IN.YO
EREF = 936.6800 IN. ZMRP = 375.0000 IN.ZO
SCALE = .0300

PARAMETRIC DATA

ELV-IB = .000 ELV-OB = 3.000
ELEVON = 5.000 MACH = .600
BETAO = .000 BETAC = 5.000
PHI = .000 DY = 10.000
DX = .000 ALPHAC = 4.000

RN/L = 3.28 GRADIENT INTERVAL = .00/ 12.00

ALPHAO = 10.000

DZ	CN	CA	CLM	CY	CBL	CYN	CL	CD	CSL	CLN
.000	.38015	.00127	.07012	.00182	-.01515	-.00733	.38204	.06866	-.01619	-.00459
3.000	.40369	-.00066	.05487	.00133	-.01199	-.00612	.39770	.06926	-.01287	-.00395
7.500	.41918	-.00186	.04486	-.00041	-.00997	-.00444	.41314	.07055	-.01058	-.00264
15.000	.43636	-.00179	.03769	-.00126	-.00738	-.00295	.43005	.07401	-.00778	-.00162
30.000	.46662	-.00382	.02609	-.00136	-.00498	-.00098	.46020	.07726	-.00507	-.00010
45.000	.48463	-.00373	.02008	-.00082	-.00388	-.00025	.47792	.08048	-.00386	.00043
60.000	.50064	-.00310	.01554	.00016	-.00285	.00019	.49357	.08388	-.00278	.00068
GRADIENT	.00408	-.00040	-.00328	-.00030	.00067	.00039	.00409	.00031	.00073	.00026

RN/L = 3.22 GRADIENT INTERVAL = .00/ 12.00

ALPHAO = 14.000

DZ	CN	CA	CLM	CY	CBL	CYN	CL	CD	CSL	CLN
.000	.64285	-.01530	.08340	-.00873	-.01420	-.00136	.62746	.14069	-.01410	.00212
3.000	.64800	-.01721	.07303	-.00808	-.01038	-.00184	.63292	.14006	-.01052	.00072
7.500	.65497	-.01777	.06109	-.00563	-.00622	-.00132	.63981	.14121	-.00635	.00022
15.000	.65806	-.01713	.04886	-.00478	-.00418	-.00090	.65236	.14500	-.00428	.00013
30.000	.68550	-.01441	.03527	-.00247	-.00350	-.00033	.66872	.15187	-.00348	.00053
45.000	.69675	-.01359	.02843	-.00055	-.00323	.00007	.67934	.15537	-.00312	.00065
60.000	.70455	-.01306	.02241	.00116	-.00312	.00040	.68678	.15778	-.00293	.00114
GRADIENT	.00161	-.00031	-.00285	.00039	.00105	.00001	.00164	.00009	.00102	-.00024

CA20 747/1 01 SI ORBITER DATA (NGN073) (05 SEP 75)

REFERENCE DATA

SREF = 2690.0000 SQ.FT. XMRP = 1109.0000 IN.XO
LREF = 474.8100 IN. YMRP = .0000 IN.YO
BREF = 935.6800 IN. ZMRP = 375.0000 IN.ZO
SCALE = .0300

PARAMETRIC DATA

ELV-IB =	.000	ELV-OB =	3.000
ELEVON =	5.000	MACH =	.600
BETAO =	.000	BETAC =	5.000
PHI =	.000	DY =	10.000
DX =	10.000	ALPHAC =	4.000

RN/L = 3.24 GRADIENT INTERVAL = .00/ 12.00

ALPHAO = 10.000

DZ	CN	CA	CLM	CY	CBL	CYN	CL	CD	CSL	CLN
.000	.39097	.00130	.05742	.00091	-.01510	-.00620	.38480	.06917	-.01595	-.00348
3.000	.40595	-.00075	.04521	.00069	-.01213	-.00527	.39992	.06975	-.01286	-.00308
7.500	.42150	-.00126	.03747	-.00044	-.00981	-.00395	.41531	.07195	-.01035	-.00218
15.000	.44488	-.00189	.02938	-.00096	-.00715	-.00280	.43845	.07539	-.00753	-.00152
30.000	.47726	-.00302	.02228	-.00064	-.00486	-.00107	.47053	.07990	-.00497	-.00021
45.000	.49870	-.00305	.01717	.00017	-.00390	-.00009	.49166	.08359	-.00365	.00059
60.000	.52415	-.00435	.00973	.00057	-.00306	.00085	.51694	.08574	-.00287	.00137
GRADIENT	.00402	-.00032	-.00259	-.00019	.00069	.00030	.00402	.00038	.00073	.00018

RN/L = 3.25 GRADIENT INTERVAL = .00/ 12.00

ALPHAO = 14.000

DZ	CN	CA	CLM	CY	CBL	CYN	CL	CD	CSL	CLN
.000	.60415	-.01848	.07876	-.00370	-.01327	-.00186	.59068	.12822	-.01333	.00140
3.000	.61236	-.02225	.06731	-.00352	-.00981	-.00145	.59955	.12655	-.00987	.00097
7.500	.62711	-.02411	.05528	-.00350	-.00659	-.00083	.61431	.12832	-.00659	.00079
15.000	.64846	-.02510	.04384	-.00398	-.00356	.00025	.63527	.13252	-.00339	.00111
30.000	.67682	-.02418	.03122	-.00125	-.00249	.00054	.66257	.14027	-.00228	.00113
45.000	.69816	-.02160	.02760	.00169	-.00309	.00036	.67295	.14552	-.00291	.00110
60.000	.70036	-.02224	.02244	.00424	-.00315	.00059	.68494	.14785	-.00292	.00133
GRADIENT	.00308	-.00072	-.00309	.00003	.00088	.00014	.00316	.00004	.00088	-.00008

CA20 747/1 01 S1 ORBITER DATA (NGN074) (11 MAR 75)

REFERENCE DATA

SREF =	2690.0000 SQ.FT.	XMRP =	1109.0000 IN.XO		
LREF =	474.8100 IN.	YMRP =	.0000 IN.YO		
BREF =	935.6800 IN.	ZMRP =	375.0000 IN.ZO		
SCALE =	.0300				

PARAMETRIC DATA

ELV-IB =	.000	ELV-OB =	3.000
ELEVON =	5.000	MACH =	.600
BETAO =	.000	BETAC =	5.000
PHI =	.000	DY =	10.000
DX =	.000	ALPHAC =	8.000

RN/L = 3.27 GRADIENT INTERVAL = .00/ 12.00

ALPHAO = 10.000

DZ	CN	CA	CLM	CY	CBL	CYN	CL	CD	CSL	CLN
.000	.24945	.00661	.05510	.00568	-.01737	-.00915	.24451	.04983	-.01870	-.00599
3.000	.26927	.00582	.04734	.00463	-.01446	-.00763	.26417	.05249	-.01557	-.00500
7.500	.29737	.00447	.04112	.00241	-.01209	-.00634	.29208	.05604	-.01301	-.00414
15.000	.33619	.00272	.03380	.00061	-.00925	-.00478	.33061	.06106	-.00994	-.00310
30.000	.38914	.00089	.02680	-.00062	-.00650	-.00238	.38308	.06845	-.00691	-.00121
45.000	.42234	-.00112	.02090	-.00006	-.00506	-.00128	.41611	.07223	-.00520	-.00038
60.000	.45532	-.00339	.01495	.00091	-.00373	-.00037	.44899	.07574	-.00373	.00029
GRADIENT	.00938	-.00029	-.00183	-.00044	.00069	.00037	.00633	.00092	.00074	.00024

RN/L = 3.22 GRADIENT INTERVAL = .00/ 12.00

ALPHAO = 14.000

DZ	CN	CA	CLM	CY	CBL	CYN	CL	CD	CSL	CLN
.000	.48393	-.01257	.08938	.00507	-.01987	-.00821	.47260	.10488	-.02079	-.00122
3.000	.50407	-.01467	.07581	.00338	-.01519	-.00494	.49264	.10771	-.01594	-.00112
7.500	.52959	-.01622	.06471	.00026	-.01133	-.00319	.51778	.11238	-.01176	-.00035
15.000	.56418	-.01837	.05435	-.00229	-.00754	-.00143	.55186	.11867	-.00766	.00044
30.000	.61667	-.02020	.04175	-.00351	-.00353	.00058	.60324	.12959	-.00329	.00141
45.000	.64773	-.02005	.03468	-.00235	-.00171	.00122	.63334	.13724	-.00136	.00160
60.000	.67123	-.02166	.02700	.00027	-.00106	.00162	.65653	.14137	-.00064	.00183
GRADIENT	.00606	-.00048	-.00323	-.00065	.00112	.00040	.00599	.00100	.00118	.00012

CA20 747/1 01 SI ORBITER DATA (NGN075) (11 MAR 75)

REFERENCE DATA

SREF =	2690.0000 SQ.FT.	XMRP =	1109.0000 IN.XO		
LREF =	474.8100 IN.	YMRP =	.0000 IN.YO		
BREF =	936.6800 IN.	ZMRP =	375.0000 IN.ZO		
SCALE =	.0300				

PARAMETRIC DATA

ELV-IB =	.000	ELV-OB =	3.000
ELEVON =	5.000	MACH =	.600
BETAO =	.000	BETAC =	5.000
PHI =	.000	DY =	10.000
DX =	10.000	ALPHAC =	8.000

RN/L = 3.24 GRADIENT INTERVAL = .00/ 12.00

ALPHAO = 10.000

DZ	CN	CA	CLM	CY	CBL	CYN	CL	CD	CSL	CLN
.000	.22202	.00477	.03516	.00535	-.01615	-.00840	.21782	.04325	-.01737	-.00547
3.000	.24001	.00431	.03197	.00415	-.01406	-.00732	.23561	.04593	-.01511	-.00477
7.500	.26822	.00300	.02790	.00252	-.01167	-.00616	.26362	.04953	-.01256	-.00405
15.000	.30902	.00130	.02257	.00115	-.00885	-.00454	.30410	.05494	-.00950	-.00294
30.000	.36161	-.00027	.02242	.00068	-.00649	-.00258	.35617	.06253	-.00694	-.00141
45.000	.40215	-.00376	.01616	.00139	-.00523	-.00173	.39670	.06613	-.00545	-.00080
60.000	.43741	-.00663	.01121	.00297	-.00435	-.00071	.43192	.06942	-.00440	.00005
GRADIENT	.00517	-.00024	-.00096	-.00038	.00059	.00029	.00612	.00083	.00063	.00019

RN/L = 3.23 GRADIENT INTERVAL = .00/ 12.00

ALPHAO = 14.000

DZ	CN	CA	CLM	CY	CBL	CYN	CL	CD	CSL	CLN
.000	.46667	-.01680	.07250	.00821	-.01985	-.00715	.45688	.09660	-.02099	-.00213
3.000	.48834	-.01953	.06882	.00603	-.01619	-.00585	.47856	.09919	-.01712	-.00176
7.500	.51602	-.02124	.05220	.00309	-.01298	-.00404	.50583	.10423	-.01357	-.00078
15.000	.54887	-.02328	.04639	.00033	-.00876	-.00223	.53820	.11019	-.00904	-.00004
30.000	.60493	-.02598	.03653	-.00116	-.00483	.00050	.59322	.12124	-.00457	.00165
45.000	.63933	-.02632	.03318	-.00105	-.00156	.00178	.62574	.12889	-.00109	.00210
60.000	.66976	-.02981	.02506	.00039	.00045	.00245	.65611	.13286	.00103	.00227
GRADIENT	.00655	-.00058	-.00264	-.00069	.00090	.00041	.00649	.00102	.00097	.00018

CA20 747/1 01 SI ORBITER DATA (NGN076) (11 MAR 75)

REFERENCE DATA

SREF =	2690.0000 SQ.FT.	XMRP =	1109.0000 IN.XO		
LREF =	474.8100 IN.	YMRP =	.0000 IN.YO		
BREF =	939.6900 IN.	ZMRP =	375.0000 IN.ZO		
SCALE =	.0300				

PARAMETRIC DATA

ELV-IB =	.000	ELV-OB =	3.000
ELEVON =	5.000	MACH =	.600
BETAO =	.000	BETAC =	-5.000
PHI =	7.500	DY =	.000
DX =	.000	ALPHAC =	4.000

RN/L = 3.22 GRADIENT INTERVAL = .00/ 12.00

ALPHAO = 10.000

DZ	CN	CA	CLM	CY	CBL	CYN	CL	CD	CSL	CLN
.000	.38215	.00401	.05289	-.01787	.00819	.00288	.37565	.07031	.00856	.00141
3.000	.38918	.00176	.04181	-.01379	.00629	.00226	.38182	.07087	.00658	.00113
7.500	.41128	.00100	.03735	-.00926	.00461	.00142	.40486	.07240	.00479	.00060
15.000	.43311	-.00043	.02686	-.00578	.00299	.00121	.42660	.07478	.00314	.00069
30.000	.46242	-.00141	.02000	-.00235	.00078	.00068	.45564	.07891	.00083	.00053
45.000	.47776	-.00106	.01522	-.00080	-.00085	-.00009	.47069	.08192	-.00065	.00006
60.000	.48980	-.00049	.01183	.00007	-.00217	-.00078	.48245	.08457	-.00227	-.00039
GRADIENT	.00381	-.00038	-.00199	.00114	-.00047	-.00019	.00382	.00028	-.00050	-.00011

RN/L = 3.24 GRADIENT INTERVAL = .00/ 12.00

ALPHAO = 14.000

DZ	CN	CA	CLM	CY	CBL	CYN	CL	CD	CSL	CLN
.000	.63229	-.00945	.07072	-.02109	.00510	.00090	.61579	.14379	.00614	-.00060
3.000	.63829	-.01090	.06199	-.01722	.00463	.00023	.62197	.14384	.00455	-.00090
7.500	.64582	-.01192	.05360	-.01287	.00290	-.00047	.62962	.14469	.00270	-.00116
15.000	.66022	-.01196	.04333	-.00924	.00108	-.00101	.64350	.14811	.00080	-.00124
30.000	.66449	-.01210	.02953	-.00518	-.00068	-.00179	.66709	.15385	-.00129	-.00153
45.000	.69331	-.01355	.02504	-.00503	-.00081	-.00159	.68133	.15591	-.00117	-.00134
60.000	.70710	-.01359	.02091	-.00391	-.00139	-.00137	.66939	.15787	-.00169	-.00100
GRADIENT	.00181	-.00032	-.00225	.00109	-.00042	-.00018	.00183	.00013	-.00045	-.00007

CA20 747/1 01 S1 ORBITER DATA (NGN077) (11 MAR 75)

REFERENCE DATA

SREF = 2690.0000 SQ.FT. XMRP = 1109.0000 IN.XO
LREF = 474.8100 IN. YMRP = .0000 IN.YO
BREF = 935.6800 IN. ZMRP = 375.0000 IN.ZO
SCALE = .0300

PARAMETRIC DATA

ELV-IB = .000 ELV-OB = 3.000
ELEVON = 5.000 MACH = .600
BETAO = .000 BETAC = -5.000
PHI = 7.500 DY = .000
DX = 10.000 ALPHAC = 4.000

RN/L = 3.29 GRADIENT INTERVAL = .00/ 12.00

ALPHAO = 10.000

DZ	CN	CA	CLM	CY	CBL	CYN	CL	CD	CSL	CLN
.000	.34294	.00938	.05006	-.01592	.01118	.00257	.33561	.06970	.01146	.00059
3.000	.36660	.00620	.03494	-.01376	.00824	.00273	.35996	.06977	.00659	.00126
7.500	.39243	.00486	.03073	-.00853	.00652	.00167	.37577	.07120	.00671	.00051
15.000	.41027	.00214	.02052	-.00591	.00432	.00140	.40367	.07335	.00450	.00063
30.000	.44510	.00073	.01343	-.00176	.00148	.00086	.43821	.07801	.00161	.00059
45.000	.46376	.00115	.01197	-.00019	-.00022	-.00019	.45552	.08166	-.00025	-.00015
60.000	.48399	-.00084	.00578	.00105	-.00117	-.00081	.47678	.08322	-.00129	-.00060
GRADIENT	.00519	-.00059	-.00245	.00100	-.00060	-.00013	.00521	.00033	-.00062	-.00002

RN/L = 3.29 GRADIENT INTERVAL = .00/ 12.00

ALPHAO = 14.000

DZ	CN	CA	CLM	CY	CBL	CYN	CL	CD	CSL	CLN
.000	.57863	-.00734	.08651	-.01599	.00953	-.00071	.55322	.13286	.00808	-.00299
3.000	.60026	-.01170	.06603	-.01375	.00621	-.00051	.58526	.13387	.00590	-.00200
7.500	.61659	-.01430	.05236	-.00928	.00274	-.00145	.60183	.13531	.00231	-.00207
15.000	.63554	-.01469	.04267	-.00545	-.00011	-.00231	.62060	.13960	-.00065	-.00221
30.000	.66924	-.01636	.02991	-.00194	-.00197	-.00306	.65332	.14603	-.00265	-.00249
45.000	.68797	-.01622	.02350	-.00052	-.00331	-.00390	.67146	.15070	-.00413	-.00269
60.000	.69722	-.01464	.02025	.00017	-.00376	-.00337	.68010	.15428	-.00446	-.00236
GRADIENT	.00496	-.00090	-.00443	.00090	-.00089	-.00011	.00503	.00033	-.00069	.00011

CA20 747/1 01 SI ORBITER DATA (NGN078) (11 MAR 75)

REFERENCE DATA

SREF = 2690.0000 SQ.FT. XMRP = 1109.0000 IN.XO
LREF = 474.8100 IN. YMRP = .0000 IN.YO
BREF = 936.6800 IN. ZMRP = 375.0000 IN.ZO
SCALE = .0300

PARAMETRIC DATA

ELV-IB =	.000	ELV-OB =	3.000
ELEVON =	5.000	MACH =	.600
BETAO =	.000	BETAC =	-5.000
PHI =	7.500	DY =	.000
DX =	.000	ALPHAC =	8.000

RN/L = 3.21 GRADIENT INTERVAL = .00/ 12.00

ALPHAO = 10.000

DZ	CN	CA	CLM	CY	CBL	CYN	CL	CD	CSL	CLN
.000	.22437	.01061	.03780	-.02408	.01273	.00135	.21912	.04941	.01278	-.00093
3.000	.24691	.01011	.03519	-.01850	.01018	.00167	.24337	.05318	.01032	-.00012
7.500	.27864	.00927	.03273	-.01241	.00807	.00159	.27280	.05752	.00823	.00016
15.000	.33048	.00824	.02840	-.00721	.00544	.00145	.31418	.06377	.00551	.00048
30.000	.39226	.00546	.02017	-.00257	.00216	.00097	.37550	.07176	.00230	.00058
45.000	.41892	.00443	.01559	-.00066	.00043	.00010	.41178	.07710	.00044	.00002
60.000	.44362	.00591	.01378	.00142	-.00131	-.00050	.43585	.08286	-.00138	-.00026
GRADIENT	.00719	-.00918	-.00065	.00154	-.00061	.00003	.00711	.00107	-.00060	.00013

RN/L = 3.30 GRADIENT INTERVAL = .00/ 12.00

ALPHAO = 14.000

DZ	CN	CA	CLM	CY	CBL	CYN	CL	CD	CSL	CLN
.000	.47136	-.01174	.07054	-.03289	.01271	.00237	.46020	.10264	.01290	-.00078
3.000	.49474	-.01367	.06227	-.02695	.01029	.00201	.48335	.10643	.01047	-.00054
7.500	.52221	-.01489	.05552	-.02022	.00902	.00133	.51030	.11190	.00811	-.00065
15.000	.55221	-.01617	.04594	-.01435	.00528	.00090	.54943	.12032	.00535	-.00040
30.000	.61597	-.01618	.03560	-.00777	.00227	-.00016	.60149	.1332	.00216	-.00070
45.000	.64899	-.01653	.02644	-.00496	.00010	-.00131	.63372	.14095	-.00022	-.00130
60.000	.65820	-.01644	.02598	-.00320	-.00046	-.00188	.65233	.14570	-.00090	-.00171
GRADIENT	.00673	-.00941	-.00198	.00167	-.0062	-.00014	.00653	.00123	-.00063	.00001

ORIGINAL PAGE IS
OF POOR QUALITY

CA20 747/1 01 SI ORBITER DATA (NGN079) (11 MAR 75)

REFERENCE DATA

SREF = 2690.0000 SQ.FT. XMRP = 1109.0000 IN.XO
LREF = 474.8100 IN. YMRP = .0000 IN.YO
BREF = 936.6900 IN. ZMRP = 375.0000 IN.ZO
SCALE = .0300

PARAMETRIC DATA

ELV-IB =	.000	ELV-OB =	3.000
ELEVON =	5.000	MACH =	.600
BETAO =	.000	BETAC =	-5.000
PHI =	7.500	DY =	.000
DX =	10.000	ALPHAC =	8.000

RN/L = 3.28 GRADIENT INTERVAL = .00/ 12.00

ALPHAO = 10.000

DZ	CN	CA	CLM	CY	CBL	CYN	CL	CD	CSL	CLN
.000	.19218	.01403	.02277	-.02364	.01392	.00191	.18683	.04719	.01404	-.00054
3.000	.21942	.01222	.01849	-.01857	.01155	.00228	.21397	.05014	.01177	.00024
7.500	.24618	.01180	.01939	-.01259	.00970	.00217	.24039	.05437	.00993	.00046
15.000	.28684	.01164	.01910	-.00748	.00715	.00205	.28047	.06128	.00739	.00078
30.000	.35470	.00836	.01372	-.00238	.00344	.00119	.34786	.06983	.00350	.00059
45.000	.39618	.00773	.01295	.00080	.00117	-.00006	.38882	.07641	.00114	-.00026
60.000	.41473	.01225	.01764	.00341	-.00086	-.00053	.40630	.08408	-.00094	-.00037
GRADIENT	.00710	-.00028	-.00040	.00146	-.00055	.00003	.00704	.00096	-.00054	.00013

RN/L = 3.27 GRADIENT INTERVAL = .00/ 12.00

ALPHAO = 14.000

DZ	CN	CA	CLM	CY	CBL	CYN	CL	CD	CSL	CLN
.000	.40668	-.00257	.07205	-.03279	.01630	.00345	.39522	.09589	.01664	-.00060
3.000	.44743	-.00851	.05305	-.02669	.01213	.00305	.43620	.09999	.01251	.00003
7.500	.47655	-.01154	.04801	-.02024	.00960	.00206	.46529	.10411	.00991	-.00032
15.000	.51926	-.01451	.04117	-.01341	.00640	.00122	.50734	.11154	.00650	-.00036
30.000	.58846	-.01823	.03463	-.00604	.00230	.00011	.57539	.12467	.00226	-.00045
45.000	.63438	-.02177	.02647	-.00351	.00069	-.00139	.62080	.13235	.00033	-.00151
60.000	.65537	-.02102	.02770	-.00203	.00050	-.00270	.64099	.13815	-.00017	-.00274
GRADIENT	.00911	-.00116	-.00304	.00165	-.00087	-.00019	.00911	.00108	-.00069	.00003

CA20 747/1 01 SI ORBITER DATA (NSN080) (11 MAR 75)

REFERENCE DATA

SREF = 2690.0000 SQ.FT. XMRP = 1109.0000 IN.XO
LREF = 474.8100 IN. YMRP = .0000 IN.YO
BREF = 936.6800 IN. ZMRP = 375.0000 IN.ZO
SCALE = .0300

PARAMETRIC DATA

ELV-IB =	.000	ELV-OB =	3.000
ELEVON =	5.000	MACH =	.600
BETAO =	.000	BETAC =	-5.000
PHI =	7.500	DY =	10.000
DX =	.000	ALPHAC =	4.000

GN/L = 3.33 GRADIENT INTERVAL = .00/ 12.00

ALPHAO = 10.000

DZ	CN	CA	CLM	CY	CBL	CYN	CL	CD	CSL	CLN
.000	.37676	.00474	.04868	-.00598	.00035	-.00041	.37021	.07009	.00027	-.00046
3.000	.39169	.00145	.03778	-.00510	-.00029	-.00059	.38548	.06944	-.00038	-.00052
7.500	.40416	.00037	.03395	-.00388	-.00075	-.00044	.39796	.07055	-.00081	-.00031
15.000	.42433	-.00133	.02777	-.00254	-.00094	.00013	.41811	.07237	-.00090	.00029
30.000	.45334	-.00224	.02221	.00038	-.00144	.00077	.44854	.07651	-.00128	.00101
45.000	.47541	-.00370	.01548	.00289	-.00190	.00078	.46993	.07891	-.00173	.00110
60.000	.50244	-.00641	.00802	.00307	-.00243	.00047	.49592	.08093	-.00231	.00058
GRADIENT	.00358	-.00055	-.00198	.00028	-.00014	-.00000	.00363	.00008	-.00014	.00002

GN/L = 3.32 GRADIENT INTERVAL = .00/ 12.00

ALPHAO = 14.000

DZ	CN	CA	CLM	CY	CBL	CYN	CL	CD	CSL	CLN
.000	.66689	-.01880	.04444	-.01166	.00211	.00301	.65165	.14293	.00278	.00241
3.000	.67155	-.02046	.03625	-.00959	.00160	.00208	.65655	.14261	.00206	.00163
7.500	.67946	-.02094	.03015	-.00670	.00068	.00126	.65949	.14265	.00097	.00106
15.000	.67614	-.01903	.02992	-.00339	-.00054	.00101	.66066	.14511	-.00028	.00111
30.000	.66942	-.01659	.02785	.00135	-.00179	.00093	.67295	.15069	-.00151	.00133
45.000	.70441	-.01671	.02185	.00347	-.00229	.00090	.68753	.15420	-.00200	.00142
60.000	.71503	-.01653	.01735	.00543	-.00262	.00093	.69779	.15694	-.00231	.00159
GRADIENT	.00099	-.00026	-.00186	.00066	-.00019	-.00023	.00102	-.00001	-.00024	-.00018

CA20 747/1 01 SI ORBITER DATA (NGN081) (11 MAR 75)

REFERENCE DATA

SREF =	2690.0000 SQ.FT.	XMRP =	1109.0000 IN.XO		
LREF =	474.8100 IN.	YMRP =	.0000 IN.YO		
BREF =	936.6800 IN.	ZMRP =	375.0000 IN.ZO		
SCALE =	.0300				

PARAMETRIC DATA

ELV-IB =	.000	ELV-OB =	3.000
ELEVON =	5.000	MACH =	.600
BETAO =	.000	BETAC =	-5.000
PHI =	7.500	DY =	10.000
DX =	10.000	ALPHAC =	4.000

RN/L = 3.26 GRADIENT INTERVAL = .00/ 12.00

ALPHAO = 10.000

DZ	CN	CA	CLM	CY	CBL	CYN	CL	CD	CSL	CLN
.000	.37052	.00318	.03095	-.01074	.00246	-.00083	.36434	.06747	.00228	-.00125
3.000	.38341	.00150	.02530	-.00984	.00146	-.00080	.37732	.06806	.00130	-.00104
7.500	.39479	.00071	.02538	-.00757	.00068	-.00087	.38866	.06925	.00052	-.00098
15.000	.41437	-.00039	.02260	-.00599	-.00018	-.00048	.40814	.07157	-.00027	-.00045
30.000	.45008	-.00316	.01678	-.00281	-.00105	.00009	.44379	.07504	-.00102	.00027
45.000	.46933	-.00335	.01484	-.00087	-.00177	.00008	.46279	.07819	-.00173	.00039
60.000	.48178	-.00226	.01531	.00113	-.00250	.00003	.47486	.08143	-.00245	.00046
GRADIENT	.00318	-.00032	-.00069	.00043	-.00023	-.00001	.00319	.00024	-.00023	.00003

RN/L = 3.25 GRADIENT INTERVAL = .00/ 12.00

ALPHAO = 14.000

DZ	CN	CA	CLM	CY	CBL	CYN	CL	CD	CSL	CLN
.000	.62873	-.02214	.04507	-.02113	.00373	.00067	.61541	.13062	.00378	-.00025
3.000	.64089	-.02534	.03367	-.01896	.00302	-.00032	.62797	.13045	.00285	-.00104
7.500	.65081	-.02635	.02777	-.01646	.00237	-.00068	.63786	.13187	.00213	-.00123
15.000	.66390	-.02529	.02396	-.01301	.00079	-.00100	.65029	.13507	.00052	-.00116
30.000	.67610	-.01921	.02775	-.00694	-.00176	-.00151	.66065	.14492	-.00207	-.00104
45.000	.69285	-.01836	.02296	-.00448	-.00245	-.00161	.67671	.14980	-.00277	-.00097
60.000	.70404	-.01702	.02004	-.00283	-.00270	-.00123	.68725	.15381	-.00292	-.00054
GRADIENT	.00289	-.00054	-.00223	.00062	-.00018	-.00017	.00293	.00018	-.00021	-.00012

CA20 747/1 01 S1 ORBITER DATA (NGN0821 (11 MAR 75)

REFERENCE DATA

SREF = 2690.0000 SQ.FT. XMRP = 1109.0000 IN.XO
LREF = 474.9100 IN. YMRP = .0000 IN.YO
BREF = 935.6800 IN. ZMRP = 375.0000 IN.ZO
SCALE = .0300

PARAMETRIC DATA

ELV-IB =	.000	ELV-OB =	3.000
ELEVON =	5.000	MACH =	.600
BETAO =	.000	BETAC =	-5.000
PHI =	7.500	DY =	10.000
DX =	.000	ALPHAC =	8.000

RN/L = 3.26 GRADIENT INTERVAL = .00/ 12.00

ALPHAO = 10.000

DZ	CN	CA	CLM	CY	CBL	CYN	CL	CD	CSL	CLN
.000	.21900	.00399	.03219	-.00318	.00251	-.00140	.21394	.04787	.00223	-.00181
3.000	.24917	.00894	.03091	-.00391	.00134	-.00148	.24285	.05197	.00106	-.00169
7.500	.27969	.00752	.02936	-.00342	.00034	-.00143	.27413	.05597	.00008	-.00147
15.000	.32289	.00545	.02670	-.00239	-.00046	-.00089	.31703	.06143	-.00057	-.00060
30.000	.38235	.00331	.02295	.00033	-.00146	.00024	.37596	.06955	-.00139	.00049
45.000	.42312	.00108	.01781	.00186	-.00199	.00053	.41650	.07454	-.00187	.00087
60.000	.45944	-.00089	.01303	.00404	-.00252	.00064	.45262	.07891	-.00237	.00106
GRADIENT	.00799	-.00033	-.00037	-.00002	-.00028	-.00000	.00792	.00106	-.00028	.00005

RN/L = 3.28 GRADIENT INTERVAL = .00/ 12.00

ALPHAO = 14.000

DZ	CN	CA	CLM	CY	CBL	CYN	CL	CD	CSL	CLN
.000	.51863	-.02061	.04226	-.00694	.00081	.00042	.50821	.10547	.00088	.00021
3.000	.53414	-.02199	.03869	-.00648	.00033	.00023	.52359	.10789	.00037	.00015
7.500	.55562	-.02264	.03467	-.00685	.00032	.00085	.54464	.11225	.00051	.00075
15.000	.58383	-.02204	.03448	-.00566	.00003	.00159	.57182	.11985	.00042	.00153
30.000	.62955	-.02072	.03125	-.00105	-.00079	.00180	.61586	.13220	-.00033	.00194
45.000	.65108	-.01972	.02649	.00094	-.00097	.00194	.64621	.14079	-.00048	.00212
60.000	.68036	-.01745	.02361	.00393	-.00145	.00173	.66437	.14766	-.00059	.00203
GRADIENT	.00492	-.00029	-.00180	-.00001	-.00086	.00006	.00484	.00091	-.00004	.00008

CA20 747/1 01 SI ORBITER DATA (NGN083) (11 MAR 75)

REFERENCE DATA

SREF = 2690.0000 SQ.FT. XMRP = 1109.0000 IN.XO
LREF = 474.8100 IN. YMRP = .0000 IN.YO
BREF = 936.6800 IN. ZMRP = 375.0000 IN.ZO
SCALE = .0300

PARAMETRIC DATA

ELV-IB = .000 ELV-OB = 3.000
ELEVON = 5.000 MACH = .600
BETAO = .000 BETAC = -5.000
PHI = 7.500 DY = 10.000
DX = 10.000 ALPHAC = 8.000

RN/L = 3.25 GRADIENT INTERVAL = .00/ 12.00

ALPHAO = 10.000

DZ	CN	CA	CLM	CY	CBL	CYN	CL	CD	CSL	CLN
.000	.22335	.00913	.01209	-.00964	.00371	-.00152	.21837	.04778	.00339	-.00214
3.000	.23922	.00935	.01546	-.00899	.00289	-.00163	.23397	.05075	.00257	-.00211
7.500	.26524	.00846	.01729	-.00797	.00219	-.00149	.25974	.05439	.00169	-.00184
15.000	.31115	.00533	.01493	-.00671	.00120	-.00094	.30549	.05928	.00102	-.00113
30.000	.37100	.00326	.01622	-.00315	-.00049	-.00024	.36479	.06764	-.00053	-.00015
45.000	.41094	.00152	.01456	-.00101	-.00157	-.00010	.40443	.07285	-.00156	.00017
60.000	.43482	.00053	.01151	.00210	-.00269	.00103	.42813	.07603	-.00247	.00148
GRADIENT	.00560	-.00010	.00087	.00022	-.00020	.00001	.00553	.00088	-.00019	.00004

RN/L = 3.25 GRADIENT INTERVAL = .00/ 12.00

ALPHAO = 14.000

DZ	CN	CA	CLM	CY	CBL	CYN	CL	CD	CSL	CLN
.000	.47811	-.01985	.03034	-.01609	.00308	-.00161	.46871	.09540	.00260	-.00231
3.000	.49908	-.02248	.02516	-.01758	.00212	-.00159	.48969	.09892	.00167	-.00204
7.500	.52352	-.02466	.02406	-.01617	.00141	-.00155	.51393	.10272	.00100	-.00165
15.000	.56198	-.02702	.02275	-.01442	.00017	-.00089	.55183	.10974	-.00038	-.00082
30.000	.60914	-.02489	.02803	-.00978	-.00059	-.00014	.59707	.12321	-.00061	.00000
45.000	.64649	-.02462	.02541	-.00843	-.00013	.00021	.63324	.13251	-.00007	.00024
60.000	.66352	-.01969	.02758	-.00497	-.00028	-.00001	.64657	.14141	-.00027	.00005
GRADIENT	.00601	-.00063	-.00079	.00026	-.00022	.00001	.00598	.00084	-.00021	.00006

CA20 747/1 01 S1 ORBITER DATA (NGN084) (11 MAR 75)

REFERENCE DATA

SREF = 2690.0000 SQ.FT. XMRP = 1109.0000 IN.XO
LREF = 474.8100 IN. YMRP = .0000 IN.YO
BREF = 936.6800 IN. ZMRP = 375.0000 IN.ZO
SCALE = .0300

PARAMETRIC DATA

ELV-1B =	.000	ELV-09 =	3.000
ELEVON =	5.000	MACH =	.600
BETAO =	.000	BETAC =	.000
PHI =	7.500	DY =	.000
DX =	.000	ALPHAC =	4.000

RN/L = 3.18 GRADIENT INTERVAL = .00/ 12.00

ALPHAO = 10.000

DZ	CN	CA	CLM	CY	CBL	CYN	CL	CD	CSL	CLN
.000	.39697	.00339	.05314	-.00344	.00094	-.00089	.39641	.07157	.00077	-.00104
3.000	.40528	.00135	.04222	-.00358	.00086	-.00059	.39889	.07171	.00074	-.00073
7.500	.41781	.00059	.03575	-.00302	.00051	-.00065	.41136	.07313	.00038	-.00073
15.000	.43785	-.00033	.02771	-.00275	.00017	-.00034	.43125	.07570	.00011	-.00035
30.000	.46303	-.00069	.02127	-.00163	-.00059	-.00014	.45611	.07973	-.00061	-.00004
45.000	.48274	-.00159	.01418	-.00127	-.00137	-.00036	.47568	.08227	-.00142	-.00012
60.000	.49762	-.00269	.00636	-.00091	-.00227	-.00072	.49053	.08376	-.00236	-.00032
GRADIENT	.00327	-.00026	-.00225	.00006	-.00006	.00003	.00328	.00022	-.00005	.00004

RN/L = 3.19 GRADIENT INTERVAL = .00/ 12.00

ALPHAO = 14.000

DZ	CN	CA	CLM	CY	CBL	CYN	CL	CD	CSL	CLN
.000	.60965	-.01089	.08297	-.00720	.00036	-.00214	.59418	.13692	-.00016	-.00217
3.000	.62107	-.01219	.05276	-.00735	.00009	-.00214	.60557	.13842	-.00043	-.00210
7.500	.62093	-.01210	.05050	-.00722	.00013	-.00190	.60532	.13846	-.00033	-.00137
15.000	.63202	-.01231	.04115	-.00697	-.00018	-.00171	.61623	.14095	-.00059	-.00161
30.000	.65994	-.01235	.02917	-.00516	-.00117	-.00175	.64332	.14767	-.00158	-.00141
45.000	.66957	-.01106	.02318	-.00478	-.00163	-.00177	.65235	.15125	-.00201	-.00133
60.000	.70780	-.01317	.01994	-.00355	-.00221	-.00176	.68996	.15845	-.00257	-.00117
GRADIENT	.00137	-.00015	-.00157	.00000	-.00003	.00003	.00136	.00019	-.00002	.00004

CA20 747/1 01 S1 ORBITER DATA (NGN085) (11 MAR 75)

REFERENCE DATA

SREF = 2690.0000 SQ.FT. XMRP = 1109.0000 IN.XO
LREF = 474.8100 IN. YMRP = .0000 IN.YO
BREF = 936.6800 IN. ZMRP = 375.0000 IN.ZO
SCALE = .0300

PARAMETRIC DAT.

ELV-IB = .000 ELV-OB = 3.000
ELEVON = 5.000 MACH = .600
BETAO = .000 BETAC = .000
PHI = 7.500 DY = .000
DX = 10.000 ALPHAC = 4.000

RN/L = 3.25 GRADIENT INTERVAL = .00/ 12.00

ALPHAO = 10.000

DZ	CN	CA	CLM	CY	CBL	CYN	CL	CD	CSL	CLN
.000	.35554	.00682	.04793	-.00305	.00160	-.00045	.34895	.05846	.00150	-.00072
3.000	.37158	.00422	.03562	-.00322	.00139	-.00035	.36520	.05969	.00131	-.00059
7.500	.38760	.00282	.02849	-.00271	.00099	-.00034	.38122	.07008	.00091	-.00051
15.000	.41021	.00151	.02154	-.00302	.00070	-.00011	.40372	.07272	.00067	-.00023
30.000	.44344	.00069	.01533	-.00176	-.00005	.00018	.43658	.07768	-.00002	.00019
45.000	.46271	.00011	.01211	-.00091	-.00111	-.00019	.45567	.08046	-.00112	.00081
60.000	.47967	-.00016	.01011	.00045	-.00232	-.00051	.47241	.08313	-.00237	-.00010
GRADIENT	.00422	-.00052	-.00251	.00005	-.00008	.00001	.00424	.00022	-.00008	.00003

RN/L = 3.26 GRADIENT INTERVAL = .00/ 12.00

ALPHAO = 14.000

DZ	CN	CA	CLM	CY	CBL	CYN	CL	CD	CSL	CLN
.000	.59755	-.01487	.07840	-.00722	.00070	-.00197	.58339	.13014	.00020	-.00208
3.000	.61401	-.01891	.06038	-.00756	.00058	-.00166	.60034	.13019	.00016	-.00175
7.500	.63166	-.02115	.04609	-.00741	.00037	-.00173	.61802	.13229	-.00006	-.00177
15.000	.65186	-.02024	.03562	-.00565	-.00111	-.00243	.63740	.13806	-.00167	-.00209
30.000	.68330	-.01895	.02451	-.00265	-.00285	-.00318	.66759	.14692	-.00353	-.00240
45.000	.70104	-.01576	.02387	-.00384	-.00256	-.00278	.68403	.15430	-.00316	-.00208
60.000	.69879	-.01479	.02039	-.00209	-.00322	-.00234	.68161	.15471	-.00369	-.00149
GRADIENT	.00450	-.00081	-.00422	-.00002	-.00004	.00003	.00455	.00030	-.00004	.00004

ORIGINAL PAGE IS OF POOR QUALITY

CA20 747/1 01 SI ORBITER DATA (NGN085) (11 MAR 75)

REFERENCE DATA

SREF = 2690.0000 SQ.FT. XMRP = 1109.0000 IN.XO
LREF = 474.8100 IN. YMRP = .0000 IN.YO
BREF = 936.6800 IN. ZMRP = 375.0000 IN.ZO
SCALE = .0300

PARAMETRIC DATA

ELV-IB = .000 ELV-09 = 3.000
ELEVON = 5.000 MACH = .600
BETAO = .000 BETAC = .000
PHI = 7.500 DY = .000
DX = 000 ALPHAC = 8.000

RN/L = 3.22 GRADIENT INTERVAL = .00/ 12.00

ALPHAO = 10.000

DZ	CN	CA	CLM	CY	CBL	CYN	CL	CD	CSL	CLN
.000	.23009	.01156	.04218	-.00361	.00400	.00050	.22459	.05134	.00402	-.00021
3.000	.25458	.01014	.03629	-.00399	.00350	.00041	.24895	.05419	.00382	-.00023
7.500	.28144	.00854	.03233	-.00358	.00307	.00014	.27561	.05769	.00305	-.00039
15.000	.32198	.00743	.02753	-.00332	.00211	.00017	.31580	.06382	.00211	-.00020
30.000	.38288	.00519	.02041	-.00158	.00057	.00007	.37626	.07162	.00057	-.00003
45.000	.41680	.00427	.01651	-.00069	-.00060	-.00027	.41170	.07693	-.00064	-.00016
60.000	.44806	.00387	.01408	.00033	-.00188	-.00024	.44058	.08162	-.00189	.00009
GRADIENT	.00678	-.00034	-.00128	.00002	-.00012	-.00005	.00673	.00064	-.00013	-.00003

RN/L = 3.21 GRADIENT INTERVAL = .00/ 12.00

ALPHAO = 14.000

DZ	CN	CA	CLM	CY	CBL	CYN	CL	CD	CSL	CLN
.000	.49463	-.01478	.06389	-.01051	.00376	-.00021	.48351	.10534	.00360	-.00111
3.000	.51113	-.01628	.05716	-.01064	.00337	-.00011	.49989	.10786	.00324	-.00092
7.500	.53208	-.01643	.05291	-.01038	.00281	-.00009	.52025	.11278	.00270	-.00077
15.000	.55914	-.01763	.04426	-.01002	.00232	.00016	.55550	.12058	.00229	-.00041
30.000	.60639	-.01694	.03395	-.00752	.00129	-.00020	.59248	.13026	.00121	-.00051
45.000	.64165	-.01671	.03011	-.00599	.00006	-.00108	.62692	.13907	-.00021	-.00107
60.000	.67307	-.01671	.02697	-.00451	-.00057	-.00129	.65712	.14692	-.00086	-.00111
GRADIENT	.00497	-.00021	-.00142	.00002	-.00013	.00001	.00487	.00100	-.00012	.00004

CA20 747/1 01 S1 ORBITER DATA (NGN087) (11 MAR 75)

REFERENCE DATA

SREF = 2690.0000 SQ.FT. XMRP = 1109.0000 IN.XO
LREF = 474.8100 IN. YMRP = .0000 IN.YO
BREF = 936.6800 IN. ZMRP = 375.0000 IN.ZO
SCALE = .0300

PARAMETRIC DATA

ELV-IB = .000 ELV-OB = 3.000
ELEVON = 5.000 MACH = .600
BETAO = .000 BETAC = .000
PHI = 7.500 DY = .000
DX = 10.000 ALPHAC = 8.000

RN/L = 3.28 GRADIENT INTERVAL = .00/ 12.00

ALPHAO = 10.000

DZ	CN	CA	CLM	CY	CBL	CYN	CL	CD	CSL	CLN
.000	.20210	.01357	.02665	-.00328	.00419	.00132	.19667	.04846	.00435	.00057
3.000	.22430	.01219	.02293	-.00376	.00392	.00115	.21878	.05096	.00406	.00045
7.500	.23861	.01157	.02235	-.00363	.00342	.00103	.24479	.05491	.00354	.00043
15.000	.29024	.01049	.02039	-.00286	.00268	.00065	.28401	.06073	.00276	.00018
30.000	.35396	.00729	.01416	-.00170	.00141	.00056	.34732	.06864	.00149	.00030
45.000	.39331	.00635	.01409	-.00003	-.00018	-.00021	.38624	.07455	-.00022	-.00017
60.000	.41612	.00759	.01816	.00254	-.00215	.00024	.40848	.07973	-.00208	.00061
GRADIENT	.00642	-.00026	-.00054	-.00004	-.00010	-.00004	.00637	.00086	-.00011	-.00002

RN/L = 3.27 GRADIENT INTERVAL = .00/ 12.00

ALPHAO = 14.000

DZ	CN	CA	CLM	CY	CBL	CYN	CL	CD	CSL	CLN
.000	.42955	-.00699	.05514	-.00989	.00466	.00037	.41849	.09713	.00462	-.00077
3.000	.46101	-.01277	.04623	-.00991	.00390	.00029	.45041	.09914	.00385	-.00066
7.500	.48497	-.01402	.04397	-.00997	.00317	.00016	.47396	.10372	.00311	-.00061
15.000	.52775	-.01835	.03558	-.00888	.00196	-.00008	.51651	.10987	.00169	-.00055
30.000	.61375	-.02182	.02960	-.00617	.00015	-.00064	.60080	.12730	-.00006	-.00065
45.000	.66608	-.02350	.02882	-.00475	-.00112	-.00181	.65199	.13934	-.00152	-.00149
60.000	.69983	-.02244	.02980	-.00345	-.00090	-.00175	.68350	.14729	-.00130	-.00148
GRADIENT	.00723	-.00088	-.00264	-.00001	-.00020	-.00003	.00723	.00099	-.00020	.00002

CA20 747/1 01 SI ORBITER DATA (NGN088) (11 MAR 75)

REFERENCE DATA

SREF = 2690.0000 SQ.FT. XMRP = 1109.0000 IN.XO
LREF = 474.8100 IN. YMRP = .0000 IN.YO
BREF = 936.6800 IN. ZMRP = 375.0000 IN.ZO
SCALE = .0300

PARAMETRIC DATA

ELV-IB = .000 ELV-OB = 3.000
ELEVON = 5.000 MACH = .600
BETAO = .000 BETAC = .000
PHI = 7.500 DY = 10.000
DX = .000 ALPHAC = 4.000

RN/L = 3.34 GRADIENT INTERVAL = .00/ 12.00

ALPHAO = 10.000

DZ	CN	CA	CLM	CY	CBL	CYN	CL	CD	CSL	CLN
.000	.37653	.00303	.05395	.00365	-.00548	-.00322	.37029	.06837	-.00596	-.00222
3.000	.38965	.00130	.04463	.00230	-.00474	-.00273	.38352	.06894	-.00514	-.00187
7.500	.40286	.00043	.03818	.00171	-.00415	-.00234	.39637	.07033	-.00449	-.00158
15.000	.42526	-.00231	.02878	.00065	-.00328	-.00140	.41920	.07157	-.00347	-.00081
30.000	.45327	-.00273	.02235	.00132	-.00263	.00001	.44695	.07602	-.00259	.00047
45.000	.47303	-.00354	.01649	.00199	-.00241	.00040	.46645	.07855	-.00231	.00082
60.000	.48401	-.00540	.00973	.00230	-.00197	.00021	.48744	.08047	-.00190	.00055
GRADIENT	.00342	-.00033	-.00205	-.00027	.00017	.00012	.00343	.00027	.00019	.00008

RN/L = 3.32 GRADIENT INTERVAL = .00/ 12.00

ALPHAO = 14.000

DZ	CN	CA	CLM	CY	CBL	CYN	CL	CD	CSL	CLN
.000	.67640	-.02643	.04077	-.00284	-.00288	.00057	.66270	.13799	-.00265	.00125
3.000	.68972	-.02391	.04209	-.00240	-.00219	.00025	.65559	.13892	-.00207	.00078
7.500	.68905	-.02218	.04001	-.00220	-.00142	.00017	.65359	.14010	-.00133	.00051
15.000	.67860	-.02162	.03243	-.00140	-.00147	.00035	.66367	.14319	-.00135	.00070
30.000	.69339	-.01838	.02665	.00192	-.00248	.00035	.67685	.14982	-.00232	.00094
45.000	.70495	-.01735	.02231	.00339	-.00272	.00048	.68821	.15370	-.00252	.00112
60.000	.71342	-.01673	.01828	.00524	-.00293	.00059	.69627	.15636	-.00270	.00127
GRADIENT	-.00105	.00055	-.00013	.00008	.00019	-.00005	-.00116	.00028	.00018	-.00009

ORIGINAL PAGE IS
OF POOR QUALITY

CA20 747/1 01 S1 ORBITER DATA (NGN089) (14 MAR 75)

REFERENCE DATA

SREF = 2690.0000 SQ.FT. XMRP = 1109.0000 IN.XO
LREF = 474.8100 IN. YMRP = .0000 IN.YO
BREF = 936.6900 IN. ZMRP = 375.0000 IN.ZO
SCALE = .0300

PARAMETRIC DATA

ELV-IB =	.000	ELV-OB =	3.000
ELEVON =	5.000	MACH =	.600
BETAO =	.000	BETAC =	.000
PHI =	7.500	DY =	10.000
DX =	10.000	ALPHAC =	4.000

RN/L = 3.32 GRADIENT INTERVAL = .00/ 12.00

ALPHAO = 10.000

DZ	CN	CA	CLM	CY	CBL	CYN	CL	CD	CSL	CLN
.000	.37030	.00222	.03671	-.00174	-.00419	-.00331	.36429	.06548	-.00470	-.00253
3.000	.38166	.00050	.03098	-.00230	-.00372	-.00323	.37577	.06577	-.00422	-.00254
7.500	.39526	-.00041	.02752	-.00293	-.00342	-.00294	.38932	.06823	-.00398	-.00230
15.000	.41612	-.00113	.02343	-.00347	-.00291	-.00197	.41000	.07115	-.00321	-.00144
30.000	.44774	-.00296	.01909	-.00270	-.00249	-.00077	.44145	.07483	-.00259	-.00033
45.000	.46748	-.00303	.01574	-.00125	-.00248	-.00011	.46090	.07820	-.00247	.00032
60.000	.48269	-.00095	.01553	.00071	-.00274	.00090	.47552	.08228	-.00254	.00135
GRADIENT	.00330	-.00034	-.00119	-.00016	.00010	.00005	.00331	.00024	.00011	.00003

RN/L = 3.26 GRADIENT INTERVAL = .00/ 12.00

ALPHAO = 14.000

DZ	CN	CA	CLM	CY	CBL	CYN	CL	CD	CSL	CLN
.000	.63638	-.02910	.04317	-.01305	-.00325	-.00148	.62452	.12572	-.00351	-.00055
3.000	.64216	-.03057	.03633	-.01263	-.00194	-.00191	.63048	.12569	-.00235	-.00139
7.500	.64874	-.02993	.03435	-.01257	-.00151	-.00177	.63659	.12801	-.00189	-.00135
15.000	.67133	-.03102	.02419	-.01147	-.00110	-.00173	.65989	.13231	-.00148	-.00141
30.000	.69095	-.02185	.02746	-.00721	-.00269	-.00205	.68501	.14354	-.00310	-.00134
45.000	.69506	-.02080	.02507	-.00446	-.00335	-.00227	.67944	.14797	-.00390	-.00139
60.000	.70134	-.01650	.02240	-.00212	-.00335	-.00179	.68500	.15162	-.00369	-.00092
GRADIENT	.00163	-.00008	-.00112	.00006	.00022	-.00003	.00160	.00032	.00021	-.00009

CA20 747/1 01 S1 ORBITER DATA (NGN090) (11 MAR 75)

REFERENCE DATA

SREF = 2690.0000 SQ.FT. XMRP = 1109.0000 IN.XO
LREF = 474.8100 IN. YMRP = .0000 IN.YO
BREF = 936.6900 IN. ZMRP = 375.0000 IN.ZO
SCALE = .0300

PARAMETRIC DATA

ELV-IB =	.000	ELV-OB =	3.000
ELEVON =	5.000	MACH =	.600
BETAO =	.000	BETAC =	.000
PHI =	7.500	DY =	10.000
DX =	.000	ALPHAC =	8.000

RN/L = 3.27 GRADIENT INTERVAL = .00/ 12.00

ALPHAO = 10.000

DZ	CN	CA	CLM	CY	CBL	CYN	CL	CD	CSL	CLN
.000	.22171	.00966	.03998	.01008	-.00514	-.00330	.21667	.04802	-.00563	-.00236
3.000	.24785	.00816	.03649	.00681	-.00435	-.00327	.24267	.05107	-.00485	-.00246
7.500	.28086	.00605	.03073	.00401	-.00377	-.00276	.27554	.05473	-.00420	-.00207
15.000	.32051	.00526	.02694	.00179	-.00314	-.00195	.31473	.06083	-.00343	-.00138
30.000	.38215	.00253	.02396	.00128	-.00269	-.00039	.37591	.06986	-.00271	.00009
45.000	.42268	.00047	.01780	.00197	-.00279	.00020	.41618	.07366	-.00271	.00069
60.000	.46055	-.00105	.01244	.00288	-.00299	.00069	.45373	.07894	-.00283	.00120
GRADIENT	.00784	-.00048	-.00124	-.00079	.00018	.00008	.00781	.00089	.00019	.00004

RN/L = 3.28 GRADIENT INTERVAL = .00/ 12.00

ALPHAO = 14.000

DZ	CN	CA	CLM	CY	CBL	CYN	CL	CD	CSL	CLN
.000	.51592	-.02283	.04713	.00660	-.00589	-.00145	.50602	.10264	-.00606	.00002
3.000	.53493	-.02389	.04048	.00350	-.00438	-.00085	.52485	.10615	-.00448	.00012
7.500	.55516	-.02369	.03650	.00029	-.00297	-.00023	.54542	.11136	-.00294	.00050
15.000	.58600	-.02372	.03417	-.00169	-.00220	.00067	.57434	.11875	-.00197	.00118
30.000	.63249	-.02253	.02940	-.00046	-.00159	.00151	.61915	.13115	-.00118	.00185
45.000	.66043	-.01999	.02729	.00053	-.00107	.00216	.64562	.14048	-.00051	.00235
60.000	.68418	-.01980	.02127	.00289	-.00127	.00222	.66965	.14630	-.00070	.00246
GRADIENT	.00533	-.00013	-.00137	-.00083	.00038	.00016	.00520	.00116	.00041	.00007

CA20 747/1 01 SI ORBITER DATA (NGN091) (11 MAR 75)

REFERENCE DATA

SREF =	2690.0000 SQ.FT.	XMRP =	1109.0000 IN.XO		
LREF =	474.8100 IN.	YMRP =	.0000 IN.YO		
BREF =	936.6800 IN.	ZMRP =	375.0000 IN.ZO		
SCALE =	.0300				

PARAMETRIC DATA

ELV-IB =	.000	ELV-OB =	3.000
ELEVON =	5.000	MACH =	.600
BETAO =	.000	BETAC =	.000
PHI =	7.500	DY =	10.000
DX =	10.000	ALPHAC =	8.000

RN/L = 3.28 GRADIENT INTERVAL = .00/ 12.00

ALPHAO = 10.000

DZ	CN	CA	CLM	CY	CBL	CYN	CL	CD	CSL	CLN
.000	.21922	.00922	.02184	.00386	-.00399	-.00331	.21928	.04715	-.00450	-.00257
3.000	.24154	.00809	.02023	.00143	-.00327	-.00335	.23647	.04990	-.00380	-.00273
7.500	.27203	.00601	.01753	-.00101	-.00274	-.00314	.26685	.05316	-.00324	-.00262
15.000	.31109	.00486	.01747	-.00265	-.00242	-.00217	.30552	.05881	-.00276	-.00172
30.000	.37083	.00252	.01822	-.00167	-.00226	-.00102	.36476	.06697	-.00240	-.00061
45.000	.40831	.00177	.01772	-.00086	-.00262	-.00052	.40180	.07265	-.00267	-.00066
60.000	.39358	.01712	.04655	.00340	-.00212	.00104	.39054	.08625	-.00191	.00139
GRADIENT	.00702	-.00043	-.00059	-.00054	.00016	.00002	.00699	.00080	.00016	-.00000

RN/L = 3.26 GRADIENT INTERVAL = .00/ 12.00

ALPHAO = 14.000

DZ	CN	CA	CLM	CY	CBL	CYN	CL	CD	CSL	CLN
.000	.49060	-.02654	.02643	-.00425	-.00555	-.00396	.48245	.09293	-.00634	-.00250
3.000	.50992	-.02838	.02258	-.00641	-.00454	-.00394	.50164	.09585	-.00533	-.00263
7.500	.53718	-.02974	.01968	-.00855	-.00375	-.00325	.52842	.10110	-.00443	-.00225
15.000	.56909	-.02957	.02110	-.01042	-.00372	-.00210	.55937	.10874	-.00412	-.00114
30.000	.62289	-.02959	.01939	-.00950	-.00200	-.00059	.61157	.12188	-.00208	-.00009
45.000	.64622	-.02337	.02702	-.00927	-.00039	.00068	.63269	.13365	-.00021	.00076
60.000	.65893	-.02198	.02547	-.00629	.00021	.00107	.65437	.14050	.00046	.00093
GRADIENT	.00620	-.00042	-.00088	-.00057	.00023	.00010	.00612	.00109	.00025	.00004

CA20 747/1 01 SI ORBITER DATA (NGN082) (11 MAR 75)

REFERENCE DATA

SREF = 2690.0000 SQ.FT. XMRP = 1109.0000 IN.XO
LREF = 474.8100 IN. YMRP = .0000 IN.YO
BREF = 936.6900 IN. ZMRP = 375.0000 IN.ZO
SCALE = .0300

PARAMETRIC DATA

ELV-IB =	.000	ELV-OB =	3.000
ELEVON =	5.000	MACH =	.600
BETAO =	.000	BETAC =	5.000
PHI =	7.500	DY =	10.000
DX =	.000	ALPHAC =	4.000

RN/L = 3.38 GRADIENT INTERVAL = .00/ 12.00

ALPHAO = 10.000

DZ	CN	CA	CLM	CY	CBL	CYN	CL	CD	CSL	CLN
.000	.36737	.00433	.06962	.00508	-.01167	-.00549	.36103	.06806	-.01262	-.00436
3.000	.39272	.00221	.05560	.00427	-.00909	-.00512	.37652	.06663	-.00984	-.00346
7.500	.39835	.00121	.04508	.00393	-.00730	-.00413	.39210	.07037	-.00791	-.00280
15.000	.42244	-.00124	.03373	.00209	-.00545	-.00269	.41623	.07213	-.00564	-.00178
30.000	.45165	-.00274	.02414	.00140	-.00355	-.00069	.44546	.07576	-.00371	-.00004
45.000	.47459	-.00372	.01633	.00157	-.00294	.00009	.46802	.07874	-.00269	.00059
60.000	.50044	-.00439	.00655	.00133	-.00216	.00065	.49360	.08259	-.00202	.00102
GRADIENT	.00408	-.00040	-.00320	-.00016	.00057	.00031	.00409	.00031	.00061	.00020

RN/L = 3.31 GRADIENT INTERVAL = .00/ 12.00

ALPHAO = 14.000

DZ	CN	CA	CLM	CY	CBL	CYN	CL	CD	CSL	CLN
.000	.64149	-.01672	.08318	.00117	-.01046	-.00274	.62647	.13897	-.01081	-.00013
3.000	.65085	-.01955	.06741	.00008	-.00733	-.00178	.63635	.13809	-.00755	.00005
7.500	.66287	-.02214	.05023	-.00081	-.00432	-.00097	.64853	.13899	-.00443	.00010
15.000	.67690	-.02235	.03621	-.00102	-.00256	-.00026	.65414	.14256	-.00255	.00037
30.000	.69735	-.01955	.02577	.00099	-.00264	.00024	.69139	.14954	-.00250	.00087
45.000	.70718	-.01767	.02161	.00225	-.00275	.00057	.69045	.15394	-.00253	.00122
60.000	.71518	-.01626	.01734	.00389	-.00278	.00094	.69787	.15724	-.00247	.00159
GRADIENT	.00284	-.00070	-.00435	-.00026	.00081	.00023	.00292	.00000	.00084	.00003

ORIGINAL PAGE IS
OF POOR QUALITY

CA20 747/1 01 S1 ORBITER DATA (NGN093) (11 MAR 75)

REFERENCE DATA

SREF =	2690.0000 SQ.FT.	XMRP =	1109.0000 IN.XO		
LREF =	474.8100 IN.	YMRP =	.0000 IN.YO		
BREF =	936.6800 IN.	ZMRP =	375.0000 IN.ZO		
SCALE =	.0300				

PARAMETRIC DATA

ELV-IB =	.000	ELV-OB =	3.000
ELEVON =	5.000	MACH =	.600
BETAO =	.000	BETAC =	5.000
PHI =	7.500	DY =	10.000
DX =	10.000	ALPHAC =	4.000

RN/L = 3.28 GRADIENT INTERVAL = .00/ 12.00

ALPHAO = 10.000

DZ	CN	CA	CLM	CY	CBL	CYN	CL	CD	CSL	CLN
.000	.36231	.00245	.05253	.00086	-.01050	-.00630	.35639	.06532	-.01143	-.00438
3.000	.37865	.00018	.04113	-.00018	-.00857	-.00527	.37286	.06593	-.00936	-.00370
7.500	.39579	-.00130	.03361	-.00129	-.00698	-.00429	.39000	.06745	-.00762	-.00301
15.000	.41774	-.00169	.02738	-.00265	-.00522	-.00292	.41169	.07089	-.00565	-.00197
30.000	.44906	-.00292	.02152	-.00308	-.00354	-.00110	.44274	.07510	-.00377	-.00045
45.000	.47156	-.00444	.01636	-.00205	-.00322	-.00052	.46517	.07751	-.00326	.00005
60.000	.49328	-.00714	.01086	-.00081	-.00316	-.00016	.48703	.07863	-.00314	.00033
GRADIENT	.00441	-.00049	-.00246	-.00028	.00046	.00026	.00443	.00029	.00050	.00018

RN/L = 3.25 GRADIENT INTERVAL = .00/ 12.00

ALPHAO = 14.000

DZ	CN	CA	CLM	CY	CBL	CYN	CL	CD	CSL	CLN
.000	.59852	-.01794	.08283	-.01025	-.01022	-.00337	.58508	.12739	-.01073	-.00080
3.000	.61553	-.02253	.06340	-.01066	-.00587	-.00290	.60269	.12705	-.00737	-.00115
7.500	.63802	-.02675	.04586	-.01194	-.00432	-.00217	.62554	.12840	-.00472	-.00106
15.000	.66367	-.02855	.03057	-.01285	-.00189	-.00114	.65068	.13276	-.00211	-.00065
30.000	.69869	-.02469	.02156	-.00956	-.00171	-.00124	.67420	.14265	-.00195	-.00073
45.000	.69796	-.02033	.02084	-.00764	-.00237	-.00120	.68215	.14912	-.00259	-.00059
60.000	.70660	-.01873	.02073	-.00439	-.00284	-.00094	.69014	.15277	-.00283	-.00022
GRADIENT	.00524	-.00116	-.00485	-.00023	.00077	.00016	.00537	.00015	.00078	-.00003

CA20 747/1 01 S1 ORBITER DATA (NSN094) (11 MAR 75)

REFERENCE DATA

SREF = 2690.0000 SQ.FT. XMRP = 1109.0000 IN.XO
LREF = 474.8100 IN. YMRP = .0000 IN.YO
BREF = 936.6900 IN. ZMRP = 375.0000 IN.ZO
SCALE = .0300

PARAMETRIC DATA

ELV-IB =	.000	ELV-OB =	3.000
ELEVON =	5.000	MACH =	.600
BETAO =	.000	BETAC =	5.000
PHI =	7.500	DY =	10.000
DX =	.000	ALPHAC =	8.000

RN/L = 3.26 GRADIENT INTERVAL = .00/ 12.00

ALPHAO = 10.000

DZ	CN	CA	CLM	CY	CBL	CYN	CL	CD	CSL	CLN
.000	.22636	.00856	.05354	.01027	-.01177	-.00678	.22143	.04774	-.01277	-.00463
3.000	.24953	.00759	.04583	.00871	-.00925	-.00577	.24442	.05080	-.01011	-.00408
7.500	.28072	.00651	.03916	.00653	-.00707	-.00447	.27532	.05516	-.00774	-.00317
15.000	.32328	.00478	.03239	.00305	-.00500	-.00284	.31755	.06082	-.00542	-.00193
30.000	.38433	.00249	.02544	.00152	-.00355	-.00091	.37806	.06919	-.00375	-.00026
45.000	.42458	.00042	.01900	.00148	-.00323	-.00017	.41806	.07414	-.00321	.00039
60.000	.46296	-.00161	.01391	.00143	-.00297	.00040	.45621	.07830	-.00285	.00091
GRADIENT	.00722	-.00027	-.00188	-.00050	.00062	.00031	.00716	.00059	.00068	.00019

RN/L = 3.28 GRADIENT INTERVAL = .00/ 12.00

ALPHAO = 14.000

DZ	CN	CA	CLM	CY	CBL	CYN	CL	CD	CSL	CLN
.000	.50479	-.02057	.07041	.01027	-.01246	-.00477	.49477	.10216	-.01324	-.00161
3.000	.52289	-.02225	.05513	.00671	-.00895	-.00310	.51873	.10569	-.00943	-.00064
7.500	.55579	-.02402	.04305	.00286	-.00578	-.00144	.54509	.11115	-.00595	.00001
15.000	.59071	-.02503	.03523	-.00001	-.00413	-.00010	.57982	.11682	-.00403	.00090
30.000	.63868	-.02408	.02757	-.00120	-.00166	.00138	.62554	.13115	-.00127	.00174
45.000	.65659	-.02169	.02448	-.00055	-.00108	.00201	.65209	.14002	-.00057	.00221
60.000	.69481	-.01935	.02224	.00176	-.00123	.00200	.66915	.14689	-.00071	.00224
GRADIENT	.00674	-.00044	-.00357	-.00089	.00088	.00044	.00664	.00120	.00095	.00021

CA20 747/1 01 SI ORBITER DATA (NGN095) (11 MAR 75)

REFERENCE DATA

SREF = 2690.0000 SQ.FT. XMRP = 1109.0000 IN.XO
LREF = 474.8100 IN. YMRP = .0000 IN.YO
BREF = 936.6800 IN. ZMRP = 375.0000 IN.ZO
SCALE = .0300

PARAMETRIC DATA

ELV-IB =	.000	ELV-OB =	3.000
ELEVON =	5.000	MACH =	.600
BETAO =	.000	BETAC =	5.000
PHI =	7.500	DY =	10.000
DX =	10.000	ALPHAC =	8.000

RN/L = 3.26 GRADIENT INTERVAL = .00/ 12.00

ALPHAO = 10.000

DZ	CN	CA	CLM	CY	CBL	CYN	CL	CD	CSL	CLN
.000	.22343	.00713	.03191	.00376	-.00949	-.00596	.21879	.04592	-.01038	-.00422
3.000	.24461	.00607	.02674	.00230	-.00737	-.00511	.23894	.04645	-.00815	-.00376
7.500	.27509	.00498	.02248	.00000	-.00555	-.00446	.27006	.05259	-.00624	-.00343
15.000	.31288	.00434	.02117	-.00239	-.00419	-.00319	.30737	.05861	-.00467	-.00241
30.000	.37603	.00173	.01822	-.00252	-.00330	-.00165	.37001	.06700	-.00353	-.00106
45.000	.41701	-.00013	.01607	-.00224	-.00304	-.00087	.41069	.07228	-.00315	-.00053
60.000	.44635	.00078	.01942	.00054	-.00200	.00155	.43943	.07828	-.00170	.00109
GRADIENT	.00688	-.00030	-.00123	-.00050	.00052	.00020	.00683	.00090	.00054	.00010

RN/L = 3.25 GRADIENT INTERVAL = .00/ 12.00

ALPHAO = 14.000

DZ	CN	CA	CLM	CY	CBL	CYN	CL	CD	CSL	CLN
.000	.47428	-.02276	.05440	-.00026	-.01227	-.00654	.46570	.09265	-.01349	-.00338
3.000	.51013	-.02993	.03313	-.00360	-.00918	-.00543	.50222	.09437	-.01022	-.00305
7.500	.53606	-.03035	.02804	-.00592	-.00740	-.00451	.52748	.10024	-.00827	-.00259
15.000	.57744	-.03171	.01972	-.00881	-.00590	-.00257	.56796	.10893	-.00634	-.00107
30.000	.63224	-.03288	.01339	-.01134	-.00229	-.00083	.62141	.12105	-.00243	-.00025
45.000	.65557	-.02747	.02038	-.01094	-.00076	.00023	.64274	.13194	-.00068	.00041
60.000	.67249	-.02321	.02384	-.00825	.00039	.00102	.65813	.14017	.00062	.00090
GRADIENT	.00804	-.00094	-.00333	-.00074	.00063	.00026	.00803	.00103	.00069	.00010

CA20 747/1 01 S1 ORBITER DATA (NGN096) (11 MAR 75)

REFERENCE DATA

SREF =	2690.0000 SQ.FT.	XMRP =	1109.0000 IN.XO		
LREF =	474.8100 IN.	YMRP =	.0000 IN.YO		
BREF =	935.6900 IN.	ZMRP =	375.0000 IN.ZO		
SCALE =	.0300				

PARAMETRIC DATA

ELV-IB =	.000	ELV-OB =	3.000
ELEVON =	5.000	MACH =	.600
BETAO =	-5.000	BETAC =	-5.000
PHI =	7.500	DY =	10.000
DX =	.000	ALPHAC =	4.000

RN/L = 3.28 GRADIENT INTERVAL = .00/ 12.00

ALPHAO = 10.000

DZ	CN	CA	CLM	CY	CBL	CYN	CL	CD	CSL	CLN
.000	.44825	-.00878	.02096	.04463	.00168	.01639	.44296	.06919	.00450	.01595
3.000	.46119	-.01117	.01150	.04479	.00090	.01554	.45612	.06909	.00351	.01525
7.500	.47411	-.01281	.00587	.04620	.00045	.01539	.46913	.06971	.00312	.01508
15.000	.49336	-.01460	.00064	.04805	.00021	.01531	.48841	.07129	.00285	.01504
30.000	.52171	-.01577	-.00505	.05121	-.00010	.01560	.51652	.07507	.00261	.01539
45.000	.54045	-.01650	-.01078	.05246	-.00046	.01582	.53510	.07760	.00229	.01565
60.000	.55177	-.01836	-.01906	.05128	-.00091	.01628	.55543	.07947	.00193	.01619
GRADIENT	.00340	-.00052	-.00195	.00022	-.00016	-.00013	.00344	.00008	-.00018	-.00010

RN/L = 3.28 GRADIENT INTERVAL = .00/ 12.00

ALPHAO = 14.000

DZ	CN	CA	CLM	CY	CBL	CYN	CL	CD	CSL	CLN
.000	.70490	-.01732	.04116	.04839	-.00005	.01630	.68815	.15373	.00389	.01593
3.000	.71086	-.01935	.03118	.04905	-.00123	.01511	.69450	.15291	.00246	.01495
7.500	.71729	-.02187	.02144	.05014	-.00256	.01429	.70128	.15231	.00097	.01448
15.000	.72702	-.02284	.01491	.05211	-.00376	.01408	.71095	.15372	-.00024	.01457
30.000	.74774	-.02317	.00611	.05630	-.00483	.01420	.73114	.15842	-.00126	.01494
45.000	.76891	-.02295	-.00077	.05786	-.00552	.01455	.74570	.16227	-.00184	.01545
60.000	.77224	-.02336	-.00672	.05914	-.00559	.01510	.75496	.16415	-.00177	.01600
GRADIENT	.00163	-.00068	-.00259	.00023	-.00033	-.00026	.00173	-.00018	-.00038	-.00017

CA20 747/1 01 S1 ORBITER DATA (NGN097) (11 MAR 75)

REFERENCE DATA

SREF = 2690.0000 SQ.FT. XMRP = 1109.0000 IN.XO
LREF = 474.8100 IN. YMRP = .0000 IN.YO
BREF = 936.6800 IN. ZMRP = 375.0000 IN.ZO
SCALE = .0300

PARAMETRIC DATA

ELV-IB =	.000	ELV-OB =	3.000
ELEVON =	5.000	MACH =	.600
PHI =	7.500	BETAO =	-5.000
BETAC =	-5.000	DY =	10.000
DX =	.000	ALPHAC =	8.000

RN/L = 3.25 GRADIENT INTERVAL = .00/ 12.00

ALPHAO = 10.000

DZ	CN	CA	CLM	CY	CBL	CYN	CL	CD	CSL	CLN
.000	.29252	-.00088	.01182	.04898	-.00303	.01656	.28823	.04993	-.00011	.01684
3.000	.31971	-.00302	.00928	.04566	-.00359	.01646	.31538	.05265	-.00069	.01683
7.500	.35195	-.00491	.00676	.04542	-.00401	.01581	.34746	.05628	-.00120	.01627
15.000	.39324	-.00701	.00472	.04665	-.00359	.01550	.38849	.06138	-.00083	.01599
30.000	.45570	-.01027	-.00071	.04940	-.00241	.01621	.45056	.06902	.00044	.01638
45.000	.49346	-.01197	-.00589	.05187	-.00189	.01602	.48804	.07390	.00092	.01610
60.000	.53197	-.01289	-.01124	.05880	-.00063	.01318	.52613	.07968	.00167	.01308
GRADIENT	.00787	-.00053	-.00067	-.00044	-.00013	-.00010	.00784	.00084	-.00014	-.00008

RN/L = 3.26 GRADIENT INTERVAL = .00/ 12.00

ALPHAO = 14.000

DZ	CN	CA	CLM	CY	CBL	CYN	CL	CD	CSL	CLN
.000	.56650	-.02332	.04363	.04965	.00115	.01642	.55532	.11443	.00509	.01566
3.000	.59600	-.02429	.03803	.04997	.00065	.01503	.57447	.11820	.00426	.01442
7.500	.60908	-.02525	.03288	.04852	.00019	.01492	.59709	.12285	.00379	.01443
15.000	.64226	-.02519	.02669	.04936	-.00107	.01477	.62928	.13094	.00254	.01459
30.000	.68423	-.02135	.01660	.05572	-.00556	.01387	.66907	.14482	-.00204	.01480
45.000	.71857	-.02180	.00760	.05702	-.00595	.01419	.70259	.15271	-.00234	.01521
60.000	.74047	-.02215	-.00043	.05909	-.00603	.01450	.72383	.15765	-.00234	.01553
GRADIENT	.00583	-.00025	-.00141	-.00016	-.00013	-.00019	.00553	.00112	-.00017	-.00015

CA20 747/1 01 SI ORBITER DATA (NGN098) (11 MAR 75)

REFERENCE DATA

SREF = 2690.0000 SQ.FT. XMRP = 1109.0000 IN.XO
LREF = 474.8100 IN. YMRP = .0000 IN.YO
BREF = 936.6800 IN. ZMRP = 375.0000 IN.ZO
SCALE = .0300

PARAMETRIC DATA

ELV-IB =	.000	ELV-OB =	3.000
ELEVON =	5.000	MACH =	.600
PHI =	7.500	BETAO =	-5.000
BETAC =	.000	DY =	10.000
DX =	.000	ALPHAC =	4.000

RN/L = 3.29 GRADIENT INTERVAL = .00/ 12.00

ALPHAO = 10.000

DZ	CN	CA	CLM	CY	CBL	CYN	CL	CD	CSL	CLN
.000	.45340	-.01368	.02121	.05204	-.00263	.01307	.44899	.06526	-.00032	.01333
3.000	.45453	-.01504	.01327	.05061	-.00245	.01356	.46008	.06585	-.00006	.01378
7.500	.47750	-.01541	.00650	.05099	-.00204	.01357	.47331	.06781	.00034	.01372
15.000	.49544	-.01646	.00122	.04892	-.00157	.01468	.49077	.06983	.00100	.01473
30.000	.52357	-.01622	-.00498	.05240	-.00090	.01457	.51843	.07494	.00165	.01458
45.000	.54093	-.01602	-.01020	.05353	-.00089	.01495	.53549	.07816	.00172	.01483
60.000	.55471	-.01481	-.01545	.05437	-.00107	.01537	.54886	.08174	.00161	.01533
GRADIENT	.00324	-.00022	-.00193	-.00012	.00008	.00006	.00323	.00035	.00009	.00005

RN/L = 3.27 GRADIENT INTERVAL = .00/ 12.00

ALPHAO = 14.000

DZ	CN	CA	CLM	CY	CBL	CYN	CL	CD	CSL	CLN
.000	.71829	-.02370	.03949	.05499	-.00418	.01298	.70269	.15077	-.00092	.01351
3.000	.72076	-.02529	.03027	.05456	-.00414	.01291	.70546	.14983	-.00089	.01353
7.500	.72460	-.02609	.02143	.05442	-.00422	.01287	.70938	.14999	-.00098	.01351
15.000	.73310	-.02515	.01468	.05355	-.00462	.01357	.71741	.15295	-.00120	.01429
30.000	.75065	-.02376	.00619	.05643	-.00521	.01385	.73429	.15659	-.00171	.01470
45.000	.76472	-.02301	-.00066	.05753	-.00557	.01415	.74757	.16268	-.00198	.01508
60.000	.77267	-.02238	-.00659	.05899	-.00573	.01465	.75513	.16521	-.00201	.01552
GRADIENT	.00084	-.00031	-.00225	-.00007	-.00001	-.00001	.00089	-.00009	-.00001	-.00001

ORIGINAL PAGE IS
OF POOR QUALITY

CA20 747/1 01 SI ORBITER DATA (NGN099) (11 MAR 75)

REFERENCE DATA

SREF = 2690.0000 SQ.FT. XMRP = 1109.0000 IN.XO
LREF = 474.8100 IN. YMRP = .0000 IN.YO
BREF = 936.6800 IN. ZMRP = 375.0000 IN.ZO
SCALE = .0300

PARAMETRIC DATA

ELV-IB =	.000	ELV-OB =	3.000
ELEVON =	5.000	HACH =	.600
BETAO =	-5.000	BETAC =	.000
PHI =	7.500	DY =	10.000
DX =	.000	ALPHAC =	8.000

RN/L = 3.25 GRADIENT INTERVAL = .00/ 12.00

ALPHAO = 10.000

DZ	CN	CA	CLM	CY	CBL	CYN	CL	CD	CSL	CLN
.000	.29793	-.00483	.01694	.05715	-.00846	.01349	.29424	.04698	-.00599	.01476
3.000	.32418	-.00552	.01138	.05431	-.00741	.01388	.32021	.05085	-.00489	.01496
7.500	.35394	-.00675	.00857	.05138	-.00644	.01432	.34974	.05481	-.00385	.01522
15.000	.39435	-.00855	.00585	.04895	-.00520	.01498	.38994	.06005	-.00252	.01555
30.000	.45348	-.01128	.00051	.04891	-.00304	.01610	.44855	.06763	-.00019	.01638
45.000	.49289	-.01237	-.00539	.05073	-.00226	.01621	.48755	.07341	.00059	.01635
60.000	.53190	-.01190	-.01142	.05541	-.00149	.01516	.52599	.08065	.00116	.01519
GRADIENT	.00740	-.00026	-.00108	-.00076	.00027	.00011	.00733	.00103	.00028	.00006

RN/L = 3.27 GRADIENT INTERVAL = .00/ 12.00

ALPHAO = 14.000

DZ	CN	CA	CLM	CY	CBL	CYN	CL	CD	CSL	CLN
.000	.56621	-.02611	.05027	.05013	-.00387	.01299	.55571	.11164	-.00061	.01354
3.000	.58710	-.02681	.04150	.05805	-.00270	.01321	.57615	.11602	.00057	.01347
7.500	.61168	-.02687	.03454	.05553	-.00192	.01347	.60002	.12191	.00139	.01353
15.000	.64587	-.02660	.02735	.05246	-.00139	.01428	.63312	.13044	.00211	.01419
30.000	.68556	-.02215	.01721	.05613	-.00571	.01376	.67055	.14436	-.00221	.01473
45.000	.71962	-.02252	.00785	.05685	-.00594	.01432	.70369	.15224	-.00230	.01533
60.000	.74235	-.02222	.00009	.05772	-.00615	.01494	.72569	.15903	-.00235	.01599
GRADIENT	.00602	-.00009	-.00205	-.00061	.00025	.00006	.00586	.00136	.00026	.00000

CA20 747/1 01 S1 ORBITER DATA (NGN100) (11 MAR 75)

REFERENCE DATA

SREF = 2690.0000 SQ.FT. XMRP = 1109.0000 IN.XO
LREF = 474.8100 IN. YMRP = .0000 IN.YO
BREF = 936.6800 IN. ZMRP = 375.0000 IN.ZO
SCALE = .0300

PARAMETRIC DATA

ELV-IB = .000 ELV-OB = 3.000
ELEVON = 5.000 MACH = .600
BETAO = -5.000 BETAC = 5.000
PHI = 7.500 DY = 10.000
DX = .000 ALPHAC = 4.000

RN/L = 3.31 GRADIENT INTERVAL = .00/ 12.00

ALPHAO = 10.000

DZ	CN	CA	CLM	CY	CBL	CYN	CL	CD	CSL	CLN
.000	.42824	-.01208	.05702	.05526	-.00880	.00818	.42383	.06247	-.00725	.00959
3.000	.44816	-.01419	.03602	.05475	-.00656	.00966	.44381	.06364	-.00479	.01066
7.500	.47128	-.01448	.01644	.05492	-.00476	.01069	.46664	.06758	-.00283	.01136
15.000	.49426	-.01467	.00514	.05386	-.00314	.01182	.48930	.07138	-.00104	.01218
30.000	.52226	-.01593	-.00326	.05346	-.00166	.01341	.51707	.07510	.00070	.01350
45.000	.54102	-.01593	-.00825	.05446	-.00124	.01418	.53557	.07826	.00124	.01418
60.000	.55326	-.01714	-.01525	.05321	-.00102	.01597	.55767	.08093	.00177	.01590
GRADIENT	.00569	-.00030	-.00533	-.00004	.00053	.00033	.00566	.00069	.00059	.00023

RN/L = 3.28 GRADIENT INTERVAL = .00/ 12.00

ALPHAO = 14.000

DZ	CN	CA	CLM	CY	CBL	CYN	CL	CD	CSL	CLN
.000	.69372	-.02135	.08465	.05555	-.00719	.01092	.67828	.14711	-.00433	.01233
3.000	.70413	-.02434	.06248	.05536	-.00655	.01108	.68910	.14673	-.00368	.01234
7.500	.71854	-.02598	.03759	.05563	-.00579	.01140	.70348	.14862	-.00288	.01246
15.000	.73365	-.02480	.02057	.05539	-.00532	.01237	.71786	.15342	-.00217	.01329
30.000	.75235	-.02383	.00811	.05537	-.00539	.01385	.73577	.15889	-.00188	.01475
45.000	.76545	-.02307	.00009	.05563	-.00561	.01423	.74830	.16280	-.00200	.01516
60.000	.77427	-.02303	-.00645	.05733	-.00597	.01506	.75685	.16496	-.00215	.01606
GRADIENT	.00339	-.00060	-.00622	.00001	.00018	.00006	.00335	.00022	.00019	.00002

CA20 747/1 01 SI ORBITER DATA (NGN101) (11 MAR 75)

REFERENCE DATA

SREF = 2690.0000 SQ.FT. XMRP = 1109.0000 IN.XO
LREF = 474.8100 IN. YMRP = .0000 IN.YO
BREF = 936.6900 IN. ZMRP = 375.0000 IN.ZO
SCALE = .0300

PARAMETRIC DATA

ELV-IB =	.000	ELV-OB =	3.000
ELEVON =	5.000	MACH =	.600
PHI =	7.500	BETAO =	-5.000
BETAC =	5.000	DY =	10.000
DX =	.000	ALPHAC =	8.000

RN/L = 3.25 GRADIENT INTERVAL = .00/ 12.00

ALPHAO = 10.000

DZ	CN	CA	CLM	CY	CBL	CYN	CL	CD	CSL	CLN
.000	.28919	-.0598	.04399	.05591	-.01312	.00909	.28584	.04433	-.01134	.01123
3.000	.31960	.00620	.02672	.05427	-.01072	.01096	.31582	.04939	-.00865	.01266
7.500	.35318	-.00736	.01686	.05118	-.00877	.01279	.34909	.05408	-.00642	.01412
15.000	.39563	-.00855	.00965	.05002	-.00665	.01377	.39110	.06028	-.00416	.01471
30.000	.45610	-.01126	.00141	.04813	-.00415	.01583	.45113	.06812	-.00134	.01631
45.000	.49480	-.01247	-.00464	.04954	-.00301	.01612	.48945	.07364	-.00017	.01640
60.000	.53720	-.01314	-.00973	.05140	-.00217	.01602	.53132	.08034	.00064	.01615
GRADIENT	.00845	-.00019	-.00350	-.00063	.00057	.00049	.00835	.00128	.00064	.00038

RN/L = 3.27 GRADIENT INTERVAL = .00/ 12.00

ALPHAO = 14.000

DZ	CN	CA	CLM	CY	CBL	CYN	CL	CD	CSL	CLN
.000	.55545	-.02478	.08256	.06172	-.00987	.00876	.54495	.11033	-.00746	.01089
3.000	.57879	-.02622	.06377	.05988	-.00723	.01031	.55794	.11459	-.00452	.01175
7.500	.60924	-.02696	.04532	.05701	-.00461	.01199	.59764	.12133	-.00157	.01275
15.000	.64705	-.02671	.03218	.05356	-.00239	.01367	.63429	.13062	.00039	.01384
30.000	.69522	-.02467	.01916	.05385	-.00339	.01440	.69054	.14425	.00021	.01479
45.000	.72491	-.02391	.00900	.05471	-.00480	.01480	.70916	.15217	-.00108	.01552
60.000	.74601	-.02253	.00063	.05731	-.00577	.01462	.72930	.15862	-.00206	.01558
GRADIENT	.00714	-.00027	-.00490	-.00063	.00069	.00043	.00699	.00147	.00077	.00025

CA20 747/1 01 SI ORBITER DATA (NGN104) (11 MAR 75)

REFERENCE DATA

SREF =	2690.0000 SQ.FT.	XMRP =	1109.0000 IN.XO		
LREF =	474.8100 IN.	YMRP =	.0000 IN.YO		
BREF =	936.6900 IN.	ZMRP =	375.0000 IN.ZO		
SCALE =	.0300				

PARAMETRIC DATA

ELV-IB =	.000	ELV-OB =	3.000
ELEVON =	5.000	MACH =	.600
PHI =	.000	BETAO =	-5.000
BETAC =	-5.000	DY =	.000
DX =	10.000	ALPHAC =	4.000

RN/L = 3.30 GRADIENT INTERVAL = .00/ 12.00

ALPHAO = 10.000

DZ	CN	CA	CLM	CY	CBL	CYN	CL	CD	CSL	CLN
.000	.34253	-.00364	.03377	.03421	.00499	.02027	.33795	.05589	.00844	.01909
3.000	.37552	-.00764	.01372	.03721	.00185	.01959	.37114	.05769	.00524	.01897
7.500	.40022	-.00943	.00066	.04065	.00031	.01913	.39577	.06021	.00363	.01879
15.000	.42807	-.01064	-.00733	.04422	-.00099	.01864	.42342	.06335	.00226	.01853
30.000	.45488	-.01124	-.01405	.04786	-.00159	.01801	.45977	.06966	.00155	.01802
45.000	.48691	-.01120	-.01721	.04837	-.00245	.01742	.48116	.07347	.00061	.01758
60.000	.50934	-.01068	-.02081	.04566	-.00372	.01668	.50346	.07793	-.00077	.01707
GRADIENT	.00752	-.00074	-.00466	.00085	-.00080	-.00015	.00753	.00057	-.00062	-.00004

RN/L = 3.28 GRADIENT INTERVAL = .00/ 12.00

ALPHAO = 14.000

DZ	CN	CA	CLM	CY	CBL	CYN	CL	CD	CSL	CLN
.000	.58775	-.02519	.07336	.04015	.01056	.01654	.57635	.11775	.01428	.01359
3.000	.61565	-.02939	.04527	.04086	.00696	.01773	.60448	.12043	.01104	.01552
7.500	.64131	-.03149	.02276	.04300	.00382	.01815	.62988	.12459	.00809	.01669
15.000	.65995	-.02650	.01114	.04903	-.00097	.01651	.64627	.13176	.00308	.01635
30.000	.69343	-.02499	.00169	.05382	-.00524	.01555	.69918	.14109	-.00132	.01636
45.000	.70316	-.02413	-.00432	.05440	-.00635	.01531	.69811	.14670	-.00246	.01639
60.000	.72600	-.02842	-.00760	.05052	-.00248	.01725	.71034	.14782	.00177	.01734
GRADIENT	.00703	-.00081	-.00661	.00039	-.00088	.00019	.00701	.00091	-.00081	.00040

CA20 747/1 01 S1 ORBITER DATA (NGN105) (11 MAR 75)

ORIGINAL PAGE IS OF POOR QUALITY

REFERENCE DATA

SREF = 2690.0000 SQ.FT. XMRP = 1109.0000 IN.XO
LREF = 474.8100 IN. YMRP = .0000 IN.YO
BREF = 936.6800 IN. ZMRP = 375.0000 IN.ZO
SCALE = .0300

PARAMETRIC DATA

ELV-IB = .000 ELV-OB = 3.000
ELEVON = 5.000 MACH = .600
PHI = .000 BETAO = -5.000
BETAC = -5.000 DY = .000
DX = 10.000 ALPHAC = 8.000

RN/L = 3.26 GRADIENT INTERVAL = .00/ 12.00

ALPHAO = 10.000

DZ	CN	CA	CLM	CY	CBL	CYN	CL	CD	CSL	CLN
.000	.22482	.00146	-.00253	.02764	.00017	.01950	.22115	.04046	.00355	.01917
3.000	.25297	-.00050	-.00785	.03213	-.00198	.01952	.24922	.04344	.00144	.01957
7.500	.27994	-.00251	-.00940	.03804	-.00307	.01893	.27612	.04614	.00027	.01917
15.000	.32550	-.00396	-.01260	.04253	-.00439	.01854	.32125	.05263	-.00109	.01912
30.000	.39902	-.00646	-.01374	.04746	-.00423	.01830	.39423	.06119	-.00099	.01876
45.000	.43251	-.00764	-.01579	.04920	-.00467	.01727	.42727	.06758	-.00160	.01782
60.000	.48403	-.00923	-.01721	.05216	-.00469	.01640	.47828	.07497	-.00177	.01697
GRADIENT	.00724	-.00052	-.00087	.00139	-.00042	-.00008	.00722	.00074	-.00042	-.00001

RN/L = 3.32 GRADIENT INTERVAL = .00/ 12.00

ALPHAO = 14.000

DZ	CN	CA	CLM	CY	CBL	CYN	CL	CD	CSL	CLN
.000	.43696	-.01858	.05093	.02574	.00869	.02045	.42848	.08768	.01336	.01774
3.000	.48116	-.02200	.02560	.03036	.00553	.02014	.47219	.09506	.01024	.01828
7.500	.51026	-.02472	.01984	.03672	.00405	.01914	.50109	.09946	.00856	.01759
15.000	.55537	-.02700	.01246	.04169	.00257	.01880	.54638	.10640	.00704	.01762
30.000	.61971	-.02900	.00500	.04685	.00100	.01841	.60832	.12179	.00542	.01762
45.000	.65039	-.02891	.00019	.04822	.00005	.01765	.64777	.13171	.00437	.01730
60.000	.69755	-.02914	-.00348	.04930	-.00097	.01791	.67417	.13906	.00339	.01761
GRADIENT	.00951	-.00080	-.00392	.00146	-.00059	-.00018	.00942	.00162	-.00082	-.00003

CA20 747/1 01 SI ORBITER DATA (NGN106) (11 MAR 75)

REFERENCE DATA

SREF = 2690.0000 SQ.FT. XMRP = 1109.0000 IN.XO
LREF = 474.8100 IN. YMRP = .0000 IN.YO
BREF = 936.6900 IN. ZMRP = 375.0000 IN.ZO
SCALE = .0300

PARAMETRIC DATA

ELV-IB =	.000	ELV-OB =	3.000
ELEVON =	5.000	MACH =	.600
BETAO =	-5.000	BETAC =	-5.000
PHI =	.000	DY =	10.000
DX =	.000	ALPHAC =	4.000

RUN NO. 0/ 0 RN/L = 3.31 GRADIENT INTERVAL = .00/ 12.00

ALPHAO	DZ	CN	CA	CLM	CY	CBL	CYN	CL	CD	CSL	CLN
10.000	.000	.43533	-.00282	.03355	.04380	-.00358	.01625	.42920	.07281	-.00070	.01652
10.000	3.000	.45995	-.00501	.01055	.04259	-.00352	.01608	.45285	.07476	-.00068	.01645
10.000	7.500	.46571	-.00662	.00526	.04324	-.00384	.01586	.46077	.07452	-.00103	.01628
10.000	15.000	.46263	-.00787	-.00093	.04459	-.00394	.01599	.47655	.07604	-.00111	.01643
10.000	30.000	.50372	-.00874	-.00613	.04747	-.00360	.01642	.49758	.07887	-.00070	.01679
10.000	45.000	.51691	-.00926	-.01099	.04925	-.00348	.01652	.51264	.08099	-.00055	.01697
10.000	60.000	.53920	-.00992	-.01541	.05110	-.00328	.01665	.52879	.08317	-.00034	.01697
	GRADIENT	.00399	-.00049	-.00357	-.00006	-.00004	-.00005	.00402	.00021	-.00005	-.00004

CA20 747/1 01 SI ORBITER DATA (NGN107) (11 MAR 75)

REFERENCE DATA

SREF = 2690.0000 SQ.FT. XMRP = 1109.0000 IN.XO
LREF = 474.8100 IN. YMRP = .0000 IN.YO
BREF = 936.6900 IN. ZMRP = 375.0000 IN.ZO
SCALE = .0300

PARAMETRIC DATA

ELV-IB =	.000	ELV-OB =	3.000
ELEVON =	5.000	MACH =	.600
PHI =	.000	BETAO =	-5.000
BETAC =	-5.000	DY =	10.000
DX =	10.000	ALPHAC =	4.000

RN/L = 3.27 GRADIENT INTERVAL = .00/ 12.00

ALPHAO = 10.000

DZ	CN	CA	CLM	CY	CBL	CYN	CL	CD	CSL	CLN
.000	.37375	-.00296	.02191	.04235	-.00298	.01624	.36858	.05198	-.00012	.01651
3.000	.40035	-.00607	.00231	.04113	-.00364	.01638	.39532	.05355	-.00074	.01676
7.500	.41456	-.00812	-.00262	.04260	-.00418	.01631	.40957	.05399	-.00129	.01679
15.000	.43632	-.00993	-.00778	.04430	-.00450	.01627	.43141	.05599	-.00161	.01680
30.000	.46489	-.01141	-.01121	.04726	-.00406	.01655	.45990	.05949	-.00110	.01712
45.000	.48425	-.01216	-.01466	.04866	-.00388	.01655	.47801	.07212	-.00093	.01709
60.000	.50585	-.01293	-.01780	.05030	-.00372	.01655	.50042	.07511	-.00077	.01704
GRADIENT	.00526	-.00057	-.00311	.00006	-.00016	.00001	.00530	.00025	-.00015	.00003

CA20 747/1 01 SI ORBITER DATA (NGN107) (11 MAR 75)

REFERENCE DATA

SREF = 2690.0000 SQ.FT. XMRP = 1109.0000 IN.XO
LREF = 474.8100 IN. YMRP = .0000 IN.YO
BREF = 936.6800 IN. ZMRP = 375.0000 IN.ZO
SCALE = .0300

PARAMETRIC DATA

ELV-IB =	.000	ELV-OB =	3.000
ELEVON =	5.000	MACH =	.600
PHI =	.000	BETAO =	-5.000
BETAC =	-5.000	DY =	10.000
DX =	10.000	ALPHAC =	4.000

RN/L = 3.25 GRADIENT INTERVAL = .00/ 12.00

ALPHAO = 14.000

OZ	CN	CA	CLM	CY	CBL	CYN	CL	CD	CSL	CLN
.000	.59968	-.02085	.06059	.03796	.00112	.01945	.58692	.12484	.00579	.01860
3.000	.62503	-.02552	.03670	.03947	.00059	.01800	.61263	.12645	.00493	.01732
7.500	.64757	-.02955	.01719	.04178	-.00005	.01662	.63548	.12799	.00397	.01614
15.000	.66335	-.03011	.01127	.04430	-.00124	.01643	.65093	.13126	.00277	.01624
30.000	.69024	-.02934	.00390	.04820	-.00238	.01651	.67683	.13852	.00169	.01659
45.000	.70921	-.02900	-.00097	.04999	-.00297	.01659	.69516	.14344	.00113	.01681
60.000	.72340	-.02953	-.00544	.05099	-.00249	.01720	.70906	.14635	.00174	.01730
GRADIENT	.00628	-.00114	-.00567	.00051	-.00016	-.00037	.00637	.00041	-.00024	-.00032

CA20 747/1 01 SI ORBITER DATA (NGN108) (11 MAR 75)

REFERENCE DATA

SREF = 2690.0000 SQ.FT. XMRP = 1109.0000 IN.XO
LREF = 474.8100 IN. YMRP = .0000 IN.YO
BREF = 936.6800 IN. ZMRP = 375.0000 IN.ZO
SCALE = .0300

PARAMETRIC DATA

ELV-IB =	.000	ELV-OB =	3.000
ELEVON =	5.000	MACH =	.600
PHI =	.000	BETAO =	-5.000
BETAC =	-5.000	DY =	10.000
DX =	10.000	ALPHAC =	8.000

RN/L = 3.24 GRADIENT INTERVAL = .00/ 12.00

ALPHAO = 10.000

OZ	CN	CA	CLM	CY	CBL	CYN	CL	CD	CSL	CLN
.000	.23605	.00186	-.00763	.04338	-.00847	.01549	.23214	.04282	-.00565	.01673
3.000	.26359	.00018	-.01084	.04256	-.00900	.01532	.25955	.04595	-.00621	.01655
7.500	.29034	-.00151	-.00961	.04344	-.00959	.01493	.28620	.04693	-.00535	.01634
15.000	.33335	-.00351	-.00976	.04427	-.00878	.01535	.32889	.05443	-.00598	.01664
30.000	.39383	-.00575	-.00933	.04753	-.00726	.01596	.38834	.06273	-.00439	.01663
45.000	.43714	-.00707	-.01098	.04948	-.00617	.01601	.43173	.06855	-.00329	.01684
60.000	.48536	-.00857	-.01163	.05207	-.00486	.01624	.47948	.07564	-.00195	.01664
GRADIENT	.00714	-.00044	-.00022	.00002	-.00008	-.00007	.00711	.00060	-.00009	-.00005

CA20 747/1 01 SI ORBITER DATA (NGN108) (11 MAR 75)

REFERENCE DATA

SREF =	2690.0000 SQ.FT.	XMRP =	1109.0000 IN.XO		
LREF =	474.8100 IN.	YMRP =	.0000 IN.YO		
BREF =	936.6800 IN.	ZMRP =	375.0000 IN.ZO		
SCALE =	.0300				

PARAMETRIC DATA

ELV-IB =	.000	ELV-OB =	3.000
ELEVON =	5.000	MACH =	.600
PHI =	.000	BETAO =	-5.000
BETAC =	-5.000	DY =	10.000
DX =	10.000	ALPHAC =	8.000

RN/L = 3.26 GRADIENT INTERVAL = .00/ 12.00

ALPHAO = 14.000

DZ	CN	CA	CLM	CY	CBL	CYN	CL	CD	CSL	CLN
.000	.47029	-.01504	.03438	.04317	-.00377	.01600	.46093	.09530	.00021	.01644
3.000	.50220	-.02204	.02046	.04334	-.00364	.01517	.49262	.10010	.00014	.01569
7.500	.52833	-.02452	.01733	.04306	-.00372	.01541	.51857	.10402	.00011	.01595
15.000	.55723	-.02546	.01419	.04406	-.00322	.01571	.55679	.11155	.00069	.01603
30.000	.62513	-.02609	.01006	.04712	-.00246	.01648	.61336	.12398	.00160	.01659
45.000	.66485	-.02855	.00484	.04887	-.00197	.01692	.65201	.13314	.00216	.01693
60.000	.69385	-.03079	-.00058	.05041	-.00181	.01728	.69020	.13993	.00243	.01721
GRADIENT	.00759	-.00072	-.00215	-.00002	.00000	-.00007	.00753	.00114	-.00001	-.00007

CA20 747/1 01 SI ORBITER DATA (NGN109) (11 MAR 75)

REFERENCE DATA

SREF =	2690.0000 SQ.FT.	XMRP =	1109.0000 IN.XO		
LREF =	474.8100 IN.	YMRP =	.0000 IN.YO		
BREF =	936.6800 IN.	ZMRP =	375.0000 IN.ZO		
SCALE =	.0300				

PARAMETRIC DATA

ELV-IB =	.000	ELV-OB =	3.000
ELEVON =	5.000	MACH =	.600
PHI =	.000	BETAO =	-5.000
BETAC =	.000	DY =	.000
DX =	10.000	ALPHAC =	4.000

RN/L = 3.27 GRADIENT INTERVAL = .00/ 12.00

ALPHAO = 10.000

DZ	CN	CA	CLM	CY	CBL	CYN	CL	CD	CSL	CLN
.000	.35706	-.00610	.02284	.04647	-.00428	.01830	.35255	.05773	-.00104	.01877
3.000	.38921	-.00868	.00590	.04593	-.00456	.01800	.38480	.05904	-.00136	.01852
7.500	.40968	-.00997	-.00282	.04662	-.00458	.01711	.40418	.06114	-.00154	.01764
15.000	.43173	-.01073	-.00851	.04691	-.00436	.01707	.42704	.06440	-.00133	.01755
30.000	.46592	-.01132	-.01431	.04798	-.00334	.01721	.46179	.06994	-.00030	.01753
45.000	.48791	-.01150	-.01699	.04798	-.00324	.01685	.48249	.07340	-.00026	.01717
60.000	.51059	-.01120	-.02021	.04865	-.00350	.01633	.50478	.07763	-.00051	.01674
GRADIENT	.00545	-.00050	-.00320	.00003	-.00004	-.00016	.00545	.00046	-.00005	-.00015

CA20 747/1 01 SI ORBITER DATA (NGN109) (11 MAR 75)

REFERENCE DATA

SREF = 2690.0000 SQ.FT. XMRP = 1109.0000 IN.XO
LREF = 474.8100 IN. YMRP = .0000 IN.YO
BREF = 936.6800 IN. ZMRP = 375.0000 IN.ZO
SCALE = .0300

PARAMETRIC DATA

ELV-IB = .000 ELV-OB = 3.000
ELEVON = 5.000 MACH = .600
PHI = .000 BETAO = -5.000
BETAC = .000 DY = .000
DX = 10.000 ALPHAC = 4.000

RN/L = 3.28 GRADIENT INTERVAL = .00/ 12.00

ALPHAO = 14.000

DZ	CN	CA	CLM	CY	CBL	CYN	CL	CD	CSL	CLN
.000	.60271	-.02624	.06268	.04538	.00064	.01849	.59115	.12035	.00510	.01779
3.000	.62159	-.03054	.04274	.04563	.00028	.01809	.61052	.12074	.00464	.01749
7.500	.64553	-.03278	.02210	.04663	-.00005	.01742	.63428	.12435	.00416	.01691
15.000	.66855	-.03209	.00981	.04781	-.00059	.01703	.65645	.13060	.00356	.01656
30.000	.68743	-.02662	.00128	.05247	-.00504	.01546	.67345	.14048	-.00115	.01622
45.000	.70549	-.02523	-.00398	.05276	-.00601	.01534	.69063	.14619	-.00212	.01634
60.000	.72601	-.02913	-.00729	.04932	-.00233	.01722	.71149	.14738	.00190	.01727
GRADIENT	.00569	-.00084	-.00535	.00017	-.00009	-.00014	.00571	.00055	-.00012	-.00012

CA20 747/1 01 SI ORBITER DATA (NGN110) (11 MAR 75)

REFERENCE DATA

SREF = 2690.0000 SQ.FT. XMRP = 1109.0000 IN.XO
LREF = 474.8100 IN. YMRP = .0000 IN.YO
BREF = 936.6800 IN. ZMRP = 375.0000 IN.ZO
SCALE = .0300

PARAMETRIC DATA

ELV-IB = .000 ELV-OB = 3.000
ELEVON = 5.000 MACH = .600
PHI = .000 BETAO = -5.000
BETAC = .000 DY = .000
DX = 10.000 ALPHAC = 8.000

RN/L = 3.28 GRADIENT INTERVAL = .00/ 12.00

ALPHAO = 10.000

DZ	CN	CA	CLM	CY	CBL	CYN	CL	CD	CSL	CLN
.000	.23171	.00048	-.00556	.04898	-.00870	.01865	.22810	.04071	-.00533	.01988
3.000	.25688	-.00128	-.00937	.04755	-.00875	.01797	.25320	.04335	-.00550	.01921
7.500	.28203	-.00282	-.00888	.04664	-.00850	.01757	.27823	.04620	-.00532	.01877
15.000	.32695	-.00447	-.01107	.04662	-.00771	.01720	.32276	.05237	-.00461	.01827
30.000	.39030	-.00632	-.01223	.04851	-.00606	.01723	.38547	.06155	-.00289	.01802
45.000	.43316	-.00741	-.01482	.04931	-.00511	.01693	.42787	.06792	-.00214	.01727
60.000	.48368	-.00864	-.01672	.05058	-.00379	.01628	.47783	.07548	-.00091	.01659
GRADIENT	.00562	-.00043	-.00040	-.00030	.00003	-.00014	.00560	.00072	.00000	-.00014

CA20 747/1 01 SI ORBITER DATA (NGN110) (11 MAR 75)

REFERENCE DATA

SREF = 2690.0000 SQ.FT. XMRP = 1109.0000 IN.XO
LREF = 474.8100 IN. YMRP = .0000 IN.YO
BREF = 936.6800 IN. ZMRP = 375.0000 IN.ZO
SCALE = .0300

PARAMETRIC DATA

ELV-IB =	.000	ELV-09 =	3.000
ELEVON =	5.000	MACH =	.600
PHI =	.000	BETAO =	-5.000
BETAC =	.000	DY =	.000
DX =	10.000	ALPHAC =	8.000

RN/L = 3.29 GRADIENT INTERVAL = .00/ 12.00

ALPHAO = 14.000

DZ	CN	CA	CLM	CY	CBL	CYN	CL	CD	CSL	CLN
.000	.45864	-.02044	.03799	.04823	-.00223	.01832	.44896	.09112	.00227	.01831
3.000	.47662	-.02242	.02557	.04697	-.00213	.01839	.46789	.09355	.00238	.01826
7.500	.52111	-.02659	.01690	.04735	-.00178	.01738	.51185	.10114	.00248	.01730
15.000	.55728	-.02704	.01295	.04699	-.00140	.01755	.54727	.10859	.00269	.01737
30.000	.62098	-.02874	.00703	.04848	-.00071	.01754	.60947	.12234	.00355	.01719
45.000	.66059	-.02890	.00126	.04839	-.00072	.01751	.64795	.13177	.00353	.01717
60.000	.68760	-.02696	-.00278	.04928	-.00131	.01758	.67416	.13834	.00299	.01737
GRADIENT	.00645	-.00070	-.00274	-.00022	.00006	-.00013	.0083	.00136	.00003	-.00014

CA20 747/1 01 SI ORBITER DATA (NGN111) (11 MAR 75)

REFERENCE DATA

SREF = 2690.0000 SQ.FT. XMRP = 1109.0000 IN.XO
LREF = 474.8100 IN. YMRP = .0000 IN.YO
BREF = 936.6800 IN. ZMRP = 375.0000 IN.ZO
SCALE = .0300

PARAMETRIC DATA

ELV-IB =	.000	ELV-09 =	3.000
ELEVON =	5.000	MACH =	.600
BETAO =	-5.000	BETAC =	.000
PHI =	.000	DY =	10.000
DX =	.000	ALPHAC =	4.000

RUN NO. 0/ 0 RN/L = 3.33 GRADIENT INTERVAL = .00/ 12.00

ALPHAO	DZ	CN	CA	CLM	CY	CBL	CYN	CL	CD	CSL	CLN
10.000	.000	.44060	-.00756	.02765	.04576	-.00820	.01474	.44310	.07045	-.00552	.01534
10.000	3.000	.46169	-.00900	.01253	.04720	-.00703	.01372	.46523	.07131	-.00454	.01473
10.000	7.500	.47026	-.00952	.00811	.04625	-.00636	.01432	.46479	.07218	-.00378	.01521
10.000	15.000	.48518	-.00983	-.00018	.04631	-.00551	.01480	.47952	.07457	-.00285	.01553
10.000	30.000	.50671	-.00985	-.00604	.04744	-.00432	.01583	.50073	.07829	-.00150	.01634
10.000	45.000	.52049	-.00987	-.01092	.04891	-.00378	.01623	.51430	.08057	-.00091	.01654
10.000	60.000	.53541	-.00999	-.01531	.05036	-.00316	.01652	.52900	.08323	-.00023	.01691
	GRADIENT	.00281	-.00026	-.00276	.00004	.00024	-.00004	.00281	.00023	.00023	-.00009

CA20 747/1 01 S¹ ORBITER DATA (NGN112) (11 MAR 75)

REFERENCE DATA

SREF =	2690.0000 SQ.FT.	XMRP =	1109.0000 IN.XO
LREF =	474.8100 IN.	YMRP =	.0000 IN.YO
BREF =	936.6800 IN.	ZMRP =	375.0000 IN.ZO
SCALE =	.0300		

PARAMETRIC DATA

ELV-IB =	.000	ELV-OB =	3.000
ELEVON =	5.000	MACH =	.600
PHI =	.000	BETAO =	-5.000
BETAC =	.000	DY =	10.000
DX =	10.000	ALPHAC =	4.000

RN/L = 3.28 GRADIENT INTERVAL = .00/ 12.00

ALPHAO = 10.000

DZ	CN	CA	CLM	CY	CBL	CYN	CL	CD	CSL	CLN
.000	.39866	-.01001	.01613	.04621	-.00913	.01435	.39434	.05937	-.00650	.01572
3.000	.41721	-.01151	.00075	.04646	-.00820	.01407	.41287	.06111	-.00593	.01528
7.500	.42728	-.01219	-.00282	.04591	-.00758	.01449	.42291	.06219	-.00495	.01558
15.000	.44572	-.01232	-.00768	.04557	-.00652	.01495	.44109	.06527	-.00392	.01585
30.000	.47093	-.01274	-.01095	.04694	-.00527	.01598	.46599	.06923	-.00244	.01655
45.000	.48753	-.01292	-.01421	.04836	-.00456	.01596	.48237	.07194	-.00172	.01651
60.000	.50603	-.01304	-.01682	.04980	-.00376	.01610	.50060	.07603	-.00090	.01650
GRADIENT	.00369	-.00028	-.00239	-.00006	.00020	.00002	.00368	.00035	.00020	-.00001

RN/L = 3.24 GRADIENT INTERVAL = .00/ 12.00

ALPHAO = 14.000

DZ	CN	CA	CLM	CY	CBL	CYN	CL	CD	CSL	CLN
.000	.62410	-.03215	.04685	.04241	-.00570	.01735	.61334	.11979	-.00133	.01821
3.000	.64153	-.03341	.02824	.04396	-.00450	.01610	.63055	.12273	-.00047	.01671
7.500	.65691	-.03418	.01420	.04491	-.00357	.01539	.64557	.12576	.00086	.01579
15.000	.67051	-.03337	.01036	.04495	-.00291	.01593	.65856	.12993	.00101	.01695
30.000	.69544	-.03151	.00385	.04708	-.00223	.01643	.68338	.13791	.00181	.01649
45.000	.71291	-.03048	-.00089	.04835	-.00232	.01679	.69911	.14283	.00181	.01695
60.000	.72504	-.03007	-.00539	.05004	-.00225	.01704	.71077	.14623	.00194	.01709
GRADIENT	.00430	-.00026	-.00426	.00032	.00028	-.00025	.00424	.00079	.00021	-.00031

CA20 747/1 01 S1 ORBITER DATA (NGN113) (18 MAR 75)

REFERENCE DATA

SREF =	2690.0000 SQ.FT.	XMRP =	1109.0000 IN.XO		
LREF =	474.8100 IN.	YMRP =	.0000 IN.YO		
BREF =	936.6800 IN.	ZMRP =	375.0000 IN.ZO		
SCALE =	.0300				

PARAMETRIC DATA

ELV-IB =	.000	ELV-OB =	3.000
ELEVON =	5.000	MACH =	.600
BETAO =	-5.000	BETAC =	.000
PHI =	.000	DY =	10.000
DX =	.000	ALPHAC =	8.000

RUN NO. 0/ 0 RN/L = 3.28 GRADIENT INTERVAL = .00/ 12.00

ALPHAO	DZ	CN	CA	CLM	CY	CBL	CYN	CL	CD	CSL	CLN
14.000	.000	.58361	-.02442	.04934	.05500	-.01146	.01308	.58278	.11865	-.00795	.01546
14.000	3.000	.59348	-.02598	.03810	.05251	-.00875	.01274	.57243	.11595	-.00541	.01440
14.000	7.500	.60810	-.02647	.03046	.05111	-.00668	.01336	.59450	.12264	-.00325	.01457
14.000	15.000	.63464	-.02654	.02458	.04836	-.00471	.01450	.62223	.12768	-.00107	.01521
14.000	30.000	.68013	-.02691	.01557	.04765	-.00275	.01606	.66544	.13643	.00122	.01624
14.000	45.000	.71115	-.02692	.00229	.04896	-.00265	.01674	.69547	.14621	.00305	.01674
14.000	60.000	.73139	-.02690	.00124	.04998	-.00164	.01740	.71615	.15093	.00461	.01723
	GRADIENT	.00551	-.00026	-.00245	-.00052	.00062	.00004	.00551	.00111	.00062	-.00011

CA20 747/1 01 S1 ORBITER DATA (NGN114) (05 SEP 75)

REFERENCE DATA

SREF =	2690.0000 SQ.FT.	XMRP =	1109.0000 IN.XO		
LREF =	474.8100 IN.	YMRP =	.0000 IN.YO		
BREF =	936.6800 IN.	ZMRP =	375.0000 IN.ZO		
SCALE =	.0300				

PARAMETRIC DATA

ELV-IB =	.000	ELV-OB =	3.000
ELEVON =	5.000	MACH =	.600
PHI =	.000	BETAO =	-5.000
BETAC =	.000	DY =	10.000
DX =	10.000	ALPHAC =	8.000

RN/L = 3.24 GRADIENT INTERVAL = .00/ 12.00

ALPHAO = 10.000

DZ	CN	CA	CLM	CY	CBL	CYN	CL	CD	CSL	CLN
.000	.24582	-.00292	-.00525	.05287	-.01579	.01241	.24259	.03981	-.01339	.01495
3.000	.26971	-.00360	-.00957	.05046	-.01459	.01295	.26623	.04389	-.01212	.01529
7.500	.29575	-.00422	-.00800	.04857	-.01329	.01330	.29199	.04720	-.01078	.01541
15.000	.33689	-.00521	-.00824	.04745	-.01128	.01388	.33267	.05337	-.00870	.01553
30.000	.39510	-.00640	-.00810	.04797	-.00854	.01513	.39120	.06248	-.00578	.01639
45.000	.43913	-.00717	-.00998	.04969	-.00698	.01551	.43272	.06902	-.00407	.01655
60.000	.48495	-.00789	-.01090	.05123	-.00493	.01634	.47897	.07634	-.00202	.01655
GRADIENT	.00559	-.00017	-.00033	-.00055	.00033	.00012	.00552	.00098	.00034	-.00005

ORIGINAL PAGE IS
OF POOR QUALITY

CA20 747/1 01 S1 ORBITER DATA (NGN114) (05 SEP 75)

REFERENCE DATA

SREF =	2690.0000 SQ.FT.	XMRP =	1109.0000 IN.XO		
LREF =	474.8100 IN.	YMRP =	.0000 IN.YO		
BREF =	936.6900 IN.	ZMRP =	375.0000 IN.ZO		
SCALE =	.0300				

PARAMETRIC DATA

ELV-IB =	.000	ELV-OB =	3.000
ELEVON =	5.000	MACH =	.600
PHI =	.000	BETAO =	-5.000
BETAC =	.000	DY =	10.000
DX =	10.000	ALPHAC =	8.000

RN/L = 3.22 GRADIENT INTERVAL = .00/ 12.00

ALPHAO = 14.000

DZ	CN	CA	CLM	CY	CBL	CYN	CL	CD	CSL	CLN
.000	.50403	-.02466	.03427	.05416	-.01175	.01267	.49502	.09801	-.00834	.01514
3.000	.52811	-.02602	.02269	.05270	-.00972	.01269	.51872	.10252	-.00637	.01467
7.500	.55582	-.02754	.01811	.04957	-.00799	.01361	.54597	.10774	-.00446	.01513
15.000	.59128	-.02804	.01475	.04806	-.00551	.01436	.58050	.11584	-.00187	.01527
30.000	.64825	-.02920	.01025	.04710	-.00283	.01605	.63606	.12849	.00113	.01626
45.000	.68557	-.02931	.00609	.04858	-.00193	.01708	.67239	.13743	.00226	.01704
60.000	.71368	-.03003	-.00042	.04848	-.00074	.01786	.69974	.14351	.00361	.01750
GRADIENT	.00685	-.00038	-.00206	-.00062	.00049	.00013	.00674	.00129	.00051	.00001

CA20 747/1 01 S1 ORBITER DATA (NGN115) (11 MAR 75)

REFERENCE DATA

SREF =	2690.0000 SQ.FT.	XMRP =	1109.0000 IN.XO		
LREF =	474.8100 IN.	YMRP =	.0000 IN.YO		
BREF =	936.6900 IN.	ZMRP =	375.0000 IN.ZO		
SCALE =	.0300				

PARAMETRIC DATA

ELV-IB =	.000	ELV-OB =	3.000
ELEVON =	5.000	MACH =	.600
PHI =	.000	BETAO =	-5.000
BETAC =	5.000	DY =	.000
DX =	10.000	ALPHAC =	4.000

RN/L = 3.26 GRADIENT INTERVAL = .00/ 12.00

ALPHAO = 10.000

DZ	CN	CA	CLM	CY	CBL	CYN	CL	CD	CSL	CLN
.000	.35745	-.00241	.03120	.05863	-.01193	.01435	.35244	.05970	-.00926	.01620
3.000	.38394	-.00573	.01188	.05566	-.01032	.01539	.37910	.06103	-.00749	.01695
7.500	.40299	-.00786	.00336	.05312	-.00886	.01576	.39823	.06224	-.00599	.01706
15.000	.43135	-.00959	-.00632	.05133	-.00707	.01625	.42648	.06536	-.00415	.01723
30.000	.46624	-.01116	-.01348	.05064	-.00502	.01691	.46109	.06997	-.00201	.01753
45.000	.48679	-.01160	-.01729	.05055	-.00449	.01692	.48141	.07310	-.00149	.01745
60.000	.50961	-.01204	-.02125	.05042	-.00383	.01700	.50396	.07654	-.00082	.01740
GRADIENT	.00593	-.00071	-.00357	-.00072	.00040	.00018	.00596	.00033	.00043	.00011

CA20 747/1 01 SI ORBITER DATA (NGN115) (11 MAR 75)

REFERENCE DATA

SREF =	2690.0000 SQ.FT.	XMRP =	1109.0000 IN.XO		
LREF =	474.8100 IN.	YMRP =	.0000 IN.YO		
BREF =	936.6900 IN.	ZMRP =	375.0000 IN.ZO		
SCALE =	.0300				

PARAMETRIC DATA

ELV-IB =	.000	ELV-OB =	3.000
ELEVON =	5.000	MACH =	.600
PHI =	.000	BETAO =	-5.000
BETAC =	5.000	DY =	.000
DX =	10.000	ALPHAC =	4.000

RN/L = 3.27 GRADIENT INTERVAL = .00/ 12.00

ALPHAO = 14.000

DZ	CN	CA	CLM	CY	CBL	CYN	CL	CD	CSL	CLN
.000	.59162	-.01697	.07962	.05216	-.00689	.01713	.56845	.12424	-.00255	.01829
3.000	.61498	-.02434	.04877	.05559	-.00580	.01535	.60260	.12517	-.00192	.01630
7.500	.63927	-.02901	.03016	.05397	-.00450	.01589	.62833	.12686	-.00052	.01649
15.000	.66400	-.03041	.01562	.05205	-.00309	.01655	.65164	.13113	.00108	.01691
30.000	.69551	-.03003	.00245	.05152	-.00256	.01704	.68309	.13936	.00164	.01715
45.000	.71588	-.02951	-.00384	.05087	-.00259	.01735	.70117	.14441	.00169	.01747
60.000	.72799	-.02868	-.00795	.05068	-.00218	.01794	.71355	.14732	.00222	.01794
GRADIENT	.00737	-.00155	-.00640	.00019	.00032	-.00014	.00753	.00027	.00027	-.00022

CA20 747/1 01 SI ORBITER DATA (NGN116) (11 MAR 75)

REFERENCE DATA

SREF =	2690.0000 SQ.FT.	XMRP =	1109.0000 IN.XO		
LREF =	474.8100 IN.	YMRP =	.0000 IN.YO		
BREF =	936.6900 IN.	ZMRP =	375.0000 IN.ZO		
SCALE =	.0300				

PARAMETRIC DATA

ELV-IB =	.000	ELV-OB =	3.000
ELEVON =	5.000	MACH =	.600
PHI =	.000	BETAO =	-5.000
BETAC =	5.000	DY =	.000
DX =	10.000	ALPHAC =	8.000

RN/L = 3.26 GRADIENT INTERVAL = .00/ 12.00

ALPHAO = 10.000

DZ	CN	CA	CLM	CY	CBL	CYN	CL	CD	CSL	CLN
.000	.22308	-.00005	.00152	.06262	-.01687	.01599	.21970	.03869	-.01384	.01858
3.000	.24750	-.00144	-.00294	.05988	-.01525	.01626	.24399	.04155	-.01219	.01656
7.500	.28313	-.00287	-.00676	.05544	-.01327	.01640	.27933	.04634	-.01022	.01646
15.000	.33117	-.00429	-.00843	.05326	-.01057	.01605	.32689	.05328	-.00763	.01764
30.000	.39597	-.00570	-.01163	.05139	-.00758	.01702	.39112	.06216	-.00451	.01808
45.000	.43522	-.00779	-.01461	.05159	-.00598	.01695	.42995	.06790	-.00295	.01773
60.000	.48316	-.00923	-.01785	.05125	-.00394	.01727	.47742	.07481	-.00098	.01769
GRADIENT	.00800	-.00037	-.00108	-.00094	.00049	.00005	.00794	.00102	.00048	-.00003

CA20 747/1 01 S1 ORBITER DATA (NGN116) (11 MAR 75)

REFERENCE DATA

SREF = 2690.0000 SQ.FT. XMRP = 1109.0000 IN.XO
LREF = 474.8100 IN. YMRP = .0000 IN.YO
BREF = 936.6800 IN. ZMRP = 375.0000 IN.ZO
SCALE = .0300

PARAMETRIC DATA

ELV-IB =	.000	ELV-OB =	3.000
ELEVON =	5.000	MACH =	.600
PHI =	.000	BETAO =	-5.000
BETAC =	5.000	DY =	.000
DX =	10.000	ALPHAC =	8.000

RN/L = 3.26 GRADIENT INTERVAL = .00/ 12.00

ALPHAO = 14.000

DZ	CN	CA	CLM	CY	CBL	CYN	CL	CD	CSL	CLN
.000	.44942	-.01866	.04548	.06779	-.01171	.01397	.44058	.09062	-.00798	.01639
3.000	.48079	-.02153	.03253	.06251	-.00908	.01499	.47172	.09543	-.00519	.01675
7.500	.51582	-.02365	.02400	.05869	-.00669	.01510	.50622	.10184	-.00284	.01627
15.000	.56121	-.02644	.01616	.05328	-.00458	.01643	.55094	.11011	-.00047	.01705
30.000	.62412	-.02813	.00817	.05140	-.00251	.01731	.61238	.12370	.00175	.01740
45.000	.66404	-.02831	.00183	.05084	-.00190	.01750	.65116	.13317	.00239	.01744
60.000	.69252	-.02870	-.00322	.05083	-.00168	.01801	.67889	.13969	.00273	.01783
GRADIENT	.00877	-.00065	-.00279	-.00118	.00066	.00014	.00867	.00149	.00067	-.00002

CA20 747/1 01 S1 ORBITER DATA (NGN117) (11 MAR 75)

REFERENCE DATA

SREF = 2690.0000 SQ.FT. XMRP = 1109.0000 IN.XO
LREF = 474.8100 IN. YMRP = .0000 IN.YO
BREF = 936.6800 IN. ZMRP = 375.0000 IN.ZO
SCALE = .0300

PARAMETRIC DATA

ELV-IB =	.000	ELV-OB =	3.000
ELEVON =	5.000	MACH =	.600
PHI =	.000	BETAO =	-5.000
BETAC =	5.000	DY =	10.000
DX =	.000	ALPHAC =	4.000

RUN NO. 0/ 0 RN/L = 3.29 GRADIENT INTERVAL = .00/ 12.00

ALPHAO	DZ	CN	CA	CLM	CY	CBL	CYN	CL	CD	CSL	CLN
10.000	.000	.42528	-.00420	.06764	.04877	-.01423	.00914	.41954	.05972	-.01243	.01148
10.000	3.000	.44467	-.00839	.04096	.04944	-.01109	.01017	.43937	.06895	-.00916	.01194
10.000	7.500	.46647	-.00926	.01756	.04758	-.00910	.01237	.46099	.07189	-.00681	.01377
10.000	15.000	.48486	-.00949	.00591	.04728	-.00716	.01356	.47914	.07485	-.00469	.01459
10.000	30.000	.50861	-.00964	-.00467	.04724	-.00514	.01540	.50256	.07882	-.00239	.01606
10.000	45.000	.52149	-.00970	-.01001	.04852	-.00424	.01590	.51525	.08100	-.00141	.01640
10.000	60.000	.53595	-.00978	-.01516	.04954	-.00323	.01652	.52951	.08343	-.00031	.01693
	GRADIENT	.00544	-.00064	-.00656	-.00018	.00057	.00044	.00547	.00032	.00073	.00031

CA20 747/1 01 SI ORBITER DATA (NGNI1B) (11 MAR 75)

REFERENCE DATA

SREF = 2690.0000 SQ.FT. XMRP = 1109.0000 IN.XO
LREF = 474.8100 IN. YMRP = .0000 IN.YO
BREF = 936.6800 IN. ZMRP = 375.0000 IN.ZO
SCALE = .0300

PARAMETRIC DATA

ELV-IB =	.000	ELV-OB =	3.000
ELEVON =	5.000	MACH =	.600
PHI =	.000	BETAO =	-5.000
BETAC =	5.000	DY =	10.000
DX =	10.000	ALPHAC =	4.000

RN/L = 3.29 GRADIENT INTERVAL = .00/ 12.00

ALPHAO = 10.000

DZ	CN	CA	CLM	CY	CBL	CYN	CL	CD	CSL	CLN
.000	.36951	-.00849	.05131	.04479	-.01656	.01058	.36537	.05581	-.01448	.01330
3.000	.39107	-.01232	.03022	.04563	-.01353	.01113	.38727	.05577	-.01139	.01331
7.500	.41366	-.01275	.01453	.04571	-.01136	.01226	.40978	.05931	-.00906	.01405
15.000	.44269	-.01240	-.00252	.04579	-.00895	.01353	.43812	.06466	-.00647	.01488
30.000	.46844	-.01276	-.00810	.04660	-.00666	.01500	.46354	.06877	-.00395	.01593
45.000	.48498	-.01323	-.01279	.04742	-.00547	.01570	.47991	.07118	-.00266	.01641
60.000	.50416	-.01378	-.01626	.04807	-.00404	.01653	.49890	.07397	-.00111	.01698
GRADIENT	.00585	-.00053	-.00479	.00011	.00068	.00023	.00585	.00049	.00071	.00011

RN/L = 3.25 GRADIENT INTERVAL = .00/ 12.00

ALPHAO = 14.000

DZ	CN	CA	CLM	CY	CBL	CYN	CL	CD	CSL	CLN
.000	.59629	-.02130	.09730	.04283	-.01540	.01484	.57403	.12117	-.01135	.01813
3.000	.61169	-.02915	.06693	.04373	-.01152	.01490	.60057	.11970	-.00757	.01724
7.500	.63987	-.03472	.03727	.04565	-.00772	.01467	.62927	.12111	-.00395	.01610
15.000	.66535	-.03365	.01910	.04634	-.00541	.01545	.65373	.12832	-.00151	.01630
30.000	.69735	-.03231	.00532	.04736	-.00305	.01693	.68445	.13736	.00114	.01716
45.000	.71494	-.03119	-.00049	.04888	-.00255	.01739	.70125	.14270	.00173	.01749
60.000	.72577	-.03060	-.00592	.05087	-.00254	.01770	.71159	.14598	.00182	.01779
GRADIENT	.00707	-.00175	-.00789	.00039	.00101	-.00003	.00729	.00002	.00097	-.00027

CA20 747/1 01 S1 ORBITER DATA (NGN119) (11 MAR 75)

REFERENCE DATA

SREF = 2690.0000 SQ.FT. XMRP = 1109.0000 IN.XO
LREF = 474.8100 IN. YMRP = .0000 IN.YO
BREF = 526.6800 IN. ZMRP = 375.0000 IN.ZO
SCALE = .0300

PARAMETRIC DATA

ELV-IB =	.000	ELV-OB =	3.000
ELEVON =	5.000	MACH =	.600
PHI =	.000	BETAO =	-5.000
BETAC =	5.000	DY =	10.000
DX =	10.000	ALPHAC =	8.300

RN/L = 3.23 GRADIENT INTERVAL = .00/ 12.00

ALPHAO = 10.000

DZ	CN	CA	CLM	CY	CBL	CYN	CL	CD	CSL	CLN
.000	.23132	-.00575	.02855	.04856	-.02219	.00731	.22880	.03451	-.02059	.01106
3.000	.25272	-.00582	.01880	.04985	-.01985	.00837	.24989	.03815	-.01809	.01169
7.500	.30896	-.00521	.00491	.04945	-.01632	.01027	.30517	.04852	-.01429	.01295
15.000	.35189	-.00561	-.00110	.04811	-.01336	.01191	.34751	.05559	-.01109	.01405
30.000	.41360	-.00650	-.00527	.04791	-.00842	.01414	.40845	.06542	-.00692	.01555
45.000	.43774	-.00763	-.00353	.04915	-.00758	.01503	.43241	.06850	-.00485	.01612
60.000	.47781	-.00892	-.01178	.04992	-.00482	.01651	.47210	.07419	-.00189	.01709
GRADIENT	.01052	.00008	-.00315	.00010	.00078	.00040	.01035	.00190	.00084	.00025

RN/L = 3.22 GRADIENT INTERVAL = .00/ 12.00

ALPHAO = 14.000

DZ	CN	CA	CLM	CY	CBL	CYN	CL	CD	CSL	CLN
.000	.46686	-.02419	.07133	.05379	-.02085	.00789	.45884	.08947	-.01832	.01270
3.000	.49409	-.02704	.05207	.05313	-.01657	.00899	.48595	.09329	-.01400	.01275
7.500	.53144	-.02757	.03576	.05170	-.01283	.01079	.52231	.10186	-.00984	.01357
15.000	.57667	-.02766	.02254	.04950	-.00865	.01244	.56623	.11267	-.00538	.01416
30.000	.63633	-.02859	.01344	.04703	-.00495	.01535	.62434	.12620	-.00110	.01610
45.000	.67163	-.02876	.00740	.04808	-.00354	.01626	.65864	.13458	.00050	.01664
60.000	.69896	-.02889	.00072	.04937	-.00237	.01713	.68518	.14106	.00165	.01720
GRADIENT	.00859	-.00042	-.00465	-.00028	.00105	.00039	.00843	.00167	.00111	.00012

CA20 747/1 01 SI ORBITER DATA (NGN120) (11 MAR 75)

REFERENCE DATA

SREF = 2690.0000 SQ.FT. XMRP = 1109.0000 IN.XO
LREF = 474.8100 IN. YMRP = .0000 IN.YO
BREF = 936.6800 IN. ZMRP = 375.0000 IN.ZO
SCALE = .0300

PARAMETRIC DATA

ELV-IB =	.000	ELV-OB =	.000
ELEVON =	5.000	MACH =	.600
BETAO =	-5.000	PHI =	.000
DX =	.000	DY =	10.000
BETAC =	-5.000	ALPHAC =	4.000

RN/L = 3.26 GRADIENT INTERVAL = .00/ 12.00

ALPHAO = 10.000

DZ	CN	CA	CLM	CY	CBL	CYN	CL	CD	CSL	CLN
.000	.43049	-.01042	.01833	.04425	-.00356	.01637	.42576	.06450	-.00085	.01674
3.000	.44782	-.01234	.00475	.04351	-.00355	.01635	.44316	.06582	-.00056	.01672
7.500	.45572	-.01368	.00323	.04454	-.00369	.01642	.45117	.06586	-.00078	.01681
15.000	.47400	-.01455	-.00291	.04600	-.00360	.01647	.46933	.06798	-.00069	.01694
30.000	.49857	-.01560	-.00742	.04860	-.00297	.01719	.49380	.07123	.00006	.01744
45.000	.51629	-.01574	-.01185	.05104	-.00275	.01729	.51118	.07415	.00030	.01750
60.000	.53544	-.01558	-.01725	.05324	-.00246	.01717	.53003	.07754	.00065	.01733
GRADIENT	.00324	-.00042	-.00188	.00005	-.00002	.00001	.00326	.00014	-.00002	.00001

RN/L = 3.24 GRADIENT INTERVAL = .00/ 12.00

ALPHAO = 14.000

DZ	CN	CA	CLM	CY	CBL	CYN	CL	CD	CSL	CLN
.000	.63056	-.02229	.04611	.04275	-.00255	.01878	.66574	.14302	.00207	.01894
3.000	.69735	-.02539	.02490	.04390	-.00243	.01716	.68279	.14408	.00179	.01723
7.500	.70037	-.02725	.01897	.04609	-.00306	.01619	.68816	.14300	.00095	.01645
15.000	.70808	-.02842	.01440	.04754	-.00356	.01633	.69393	.14372	.00049	.01671
30.000	.72421	-.02817	.00734	.05107	-.00421	.01678	.70951	.14787	-.00002	.01730
45.000	.73589	-.02836	.00155	.05283	-.00423	.01731	.72185	.15076	.00008	.01781
60.000	.74555	-.02849	-.00413	.05502	-.00405	.01776	.73058	.15279	.00037	.01821
GRADIENT	.00249	-.00084	-.00345	.00045	-.00007	-.00034	.00257	-.00002	-.00015	-.00031

CA20 747/1 01 SI ORBITER DATA (NGN121) (11 MAR 75)

REFERENCE DATA

SREF = 2690.0000 SQ.FT. XMRP = 1109.0000 IN.XO
LREF = 474.8100 IN. YMRP = .0000 IN.YO
BREF = 936.6800 IN. ZMRP = 375.0000 IN.ZO
SCALE = .0300

PARAMETRIC DATA

ELV-IB = .000 ELV-OB = .000
ELEVON = 5.000 MACH = .600
BETAO = -5.000 PHI = .000
DX = .000 DY = 10.000
BETAC = -5.000 ALPHAC = 8.000

RN/L = 3.25 GRADIENT INTERVAL = .00/ 12.00

ALPHAO = 10.000

DZ	CN	CA	CLM	CY	CBL	CYN	CL	CD	CSL	CLN
.000	.28717	-.00317	.00787	.04929	-.01043	.01483	.28335	.04674	-.00770	.01642
3.000	.30947	-.00443	.00607	.04754	-.01041	.01453	.30554	.04937	-.00773	.01611
7.500	.33626	-.00588	.00485	.04696	-.00994	.01437	.33217	.05260	-.00730	.01598
15.000	.37610	-.00749	.00193	.04689	-.00879	.01502	.37168	.05794	-.00604	.01632
30.000	.43085	-.00968	-.00198	.04963	-.00660	.01622	.42599	.06528	-.00369	.01712
45.000	.46710	-.01092	-.00724	.05183	-.00520	.01691	.46190	.07036	-.00221	.01745
60.000	.50276	-.01195	-.01266	.05385	-.00399	.01727	.49720	.07554	-.00092	.01770
GRADIENT	.00650	-.00036	-.00039	-.00030	.00007	-.00006	.00646	.00078	.00006	-.00007

RN/L = 3.24 GRADIENT INTERVAL = .00/ 12.00

ALPHAO = 14.000

DZ	CN	CA	CLM	CY	CBL	CYN	CL	CD	CSL	CLN
.000	.54883	-.02394	.03902	.04951	-.00584	.01542	.53832	.10954	-.00194	.01637
3.000	.56834	-.02585	.03212	.04816	-.00517	.01457	.55772	.11241	-.00150	.01539
7.500	.58867	-.02694	.02849	.04670	-.00478	.01493	.57771	.11627	-.00102	.01554
15.000	.61757	-.02739	.02421	.04685	-.00427	.01550	.60585	.12282	-.00040	.01607
30.000	.66560	-.02779	.01592	.05008	-.00337	.01636	.65255	.13406	.00069	.01689
45.000	.69617	-.02747	.00844	.05238	-.00384	.01674	.68213	.14177	.00033	.01717
60.000	.71596	-.02752	.00104	.05480	-.00386	.01752	.70135	.14650	.00049	.01754
GRADIENT	.00525	-.00039	-.00136	-.00037	.00014	-.00005	.00519	.00089	.00012	-.00009

ORIGINAL PAGE IS OF POOR QUALITY

CA20 747/1 01 SI ORBITER DATA (NGN122) (11 MAR 75)

REFERENCE DATA

SREF = 2690.0000 SQ.FT. XMRP = 1109.0000 IN.XO
LREF = 474.8100 IN. YMRP = .0000 IN.YO
BREF = 935.6900 IN. ZMRP = 375.0000 IN.ZO
SCALE = .0300

PARAMETRIC DATA

ELV-1B =	.000	ELV-09 =	.000
ELEVON =	5.000	MACH =	.600
BETAO =	-5.000	PHI =	.000
DX =	.000	DY =	10.000
BETAC =	.000	ALPHAC =	4.000

RN/L = 3.33 GRADIENT INTERVAL = .00/ 12.00

ALPHAO = 10.000

DZ	CN	CA	CLM	CY	CBL	CYN	CL	CD	CSL	CLN
.000	.43205	-.01432	.01925	.04899	-.00788	.01402	.42797	.06093	-.00533	.01517
3.000	.44565	-.01569	.00810	.04869	-.00693	.01407	.44161	.06193	-.00429	.01504
7.500	.46549	-.01612	.00430	.04767	-.00624	.01494	.45137	.06322	-.00355	.01580
15.000	.47307	-.01645	-.00142	.04809	-.00493	.01544	.46874	.06594	-.00217	.01606
30.000	.49732	-.01646	-.00699	.04930	-.00347	.01658	.49282	.07015	-.00055	.01655
45.000	.51519	-.01633	-.01160	.05119	-.00299	.01698	.51015	.07337	-.00000	.01724
60.000	.53380	-.01624	-.01655	.05293	-.00258	.01726	.52821	.07655	.00046	.01744
GRADIENT	.00305	-.00023	-.00190	-.00018	.00021	.00013	.00304	.00030	.00023	.00009

RN/L = 3.27 GRADIENT INTERVAL = .00/ 12.00

ALPHAO = 14.000

DZ	CN	CA	CLM	CY	CBL	CYN	CL	CD	CSL	CLN
.000	.69362	-.03127	.03572	.04358	-.00503	.01838	.68543	.13867	-.00044	.01905
3.000	.70391	-.03112	.02419	.04778	-.00445	.01557	.69044	.14007	-.00055	.01618
7.500	.70555	-.03088	.01920	.04909	-.00442	.01515	.69187	.14057	-.00082	.01577
15.000	.70691	-.02871	.01440	.05021	-.00559	.01502	.69480	.14364	-.00179	.01593
30.000	.72227	-.02722	.00695	.05207	-.00595	.01600	.70837	.14857	-.00190	.01655
45.000	.73410	-.02654	.00091	.05341	-.00582	.01635	.71879	.15155	-.00169	.01727
60.000	.74200	-.02639	-.00424	.05615	-.00609	.01683	.72634	.15390	-.00184	.01781
GRADIENT	.00085	.00005	-.00212	.00070	.00008	-.00040	.00082	.00025	-.00002	-.00041

CA20 747/1 01 SI ORBITER DATA (NGN123) (11 MAR 75)

REFERENCE DATA

SREF = 2690.0000 SQ.FT. XMRP = 1109.0000 IN.XO
LREF = 474.8100 IN. YMRP = .0000 IN.YO
BREF = 936.6800 IN. ZMRP = 375.0000 IN.ZO
SCALE = .0300

PARAMETRIC DATA

ELV-IB = .000 ELV-OB = .000
ELEVON = 5.000 MACH = .600
BETAO = -5.000 PHI = .000
DX = .000 DY = 10.000
BETAC = .000 ALPHAC = 8.000

RN/L = 3.28 GRADIENT INTERVAL = .00/ 12.00

ALPHAO = 10.000

DZ	CN	CA	CLM	CY	CBL	CYN	CL	CD	CSL	CLN
.000	.28131	-.00631	.01419	.05620	-.01507	.01209	.27814	.04264	-.01275	.01453
3.000	.30670	-.00704	.00882	.05346	-.01372	.01285	.30326	.04633	-.01128	.01504
7.500	.33503	-.00776	.00759	.05104	-.01225	.01339	.33129	.05054	-.00974	.01532
15.000	.37417	-.00863	.00369	.04989	-.01013	.01429	.36998	.05647	-.00749	.01593
30.000	.42951	-.01024	-.00103	.05020	-.00714	.01576	.42476	.06450	-.00429	.01676
45.000	.46590	-.01140	-.00665	.05134	-.00521	.01655	.46080	.06958	-.00226	.01720
60.000	.50156	-.01245	-.01251	.05232	-.00331	.01721	.49610	.07484	-.00027	.01752
GRADIENT	.00709	-.00019	-.00083	-.00068	.00037	.00017	.00702	.00104	.00040	.00010

RN/L = 3.26 GRADIENT INTERVAL = .00/ 12.00

ALPHAO = 14.000

DZ	CN	CA	CLM	CY	CBL	CYN	CL	CD	CSL	CLN
.000	.54453	-.02642	.04461	.05632	-.01130	.01319	.53475	.10610	-.00778	.01553
3.000	.56474	-.02798	.03658	.05459	-.00887	.01316	.55473	.10948	-.00542	.01492
7.500	.58725	-.02846	.03118	.05209	-.00705	.01371	.57669	.11446	-.00352	.01501
15.000	.61959	-.02909	.02568	.04932	-.00501	.01517	.60823	.12167	-.00119	.01593
30.000	.66706	-.02870	.01638	.05010	-.00333	.01630	.65419	.13353	.00071	.01682
45.000	.69559	-.02715	.00842	.05254	-.00423	.01634	.69150	.14193	-.00015	.01697
60.000	.71218	-.02547	.00089	.05595	-.00582	.01654	.69719	.14758	-.00165	01746
GRADIENT	.00554	-.00026	-.00174	-.00056	.00055	.00007	.00554	.00111	.00056	-.00006

CA20 747/1 01 S1 ORBITER DATA (NGN124) (11 MAR 75)

REFERENCE DATA

SREF =	2690.0000 SQ.FT.	XMRP =	1109.0000 IN.XO		
LREF =	474.8100 IN.	YMRP =	.0000 IN.YO		
EREF =	936.6800 IN.	ZMRP =	375.0000 IN.ZO		
SCALE =	.0300				

PARAMETRIC DATA

ELV-IB =	.000	ELV-OB =	.000
ELEVON =	5.000	MACH =	.600
BETAO =	-5.000	PHI =	.000
DX =	.000	DY =	10.000
BETAC =	5.000	ALPHAC =	4.000

CN/L = 3.25 GRADIENT INTERVAL = .00/ 12.00

ALPHAO = 10.000

DZ	CN	CA	CLM	CY	CBL	CYN	CL	CD	CSL	CLN
.000	.41333	-.01296	.05188	.05093	-.01292	.00931	.40964	.05907	-.01110	.01141
3.000	.43313	-.01530	.03159	.05040	-.01058	.01083	.42921	.06015	-.00853	.01250
7.500	.45561	-.01571	.01335	.04862	-.00890	.01300	.45142	.05354	-.00651	.01435
15.000	.47633	-.01609	.00339	.04849	-.00664	.01419	.47188	.06697	-.00408	.01513
30.000	.50884	-.01639	-.00594	.04885	-.00458	.01604	.49805	.07118	-.00173	.01659
45.000	.51933	-.01635	-.01109	.05018	-.00380	.01667	.51448	.07411	-.00065	.01704
60.000	.53607	-.01630	-.01576	.05163	-.00272	.01716	.53075	.07703	.00031	.01737
GRADIENT	.00554	-.00035	-.00505	-.00032	.00052	.00049	.00552	.00062	.00060	.00039

CN/L = 3.23 GRADIENT INTERVAL = .00/ 12.00

ALPHAO = 14.000

DZ	CN	CA	CLM	CY	CBL	CYN	CL	CD	CSL	CLN
.000	.65203	-.02357	.08588	.04275	-.01123	.01514	.64491	.13571	-.00723	.01741
3.000	.67480	-.02630	.05789	.04643	-.00805	.01414	.66153	.13526	-.00439	.01557
7.500	.69933	-.03161	.03418	.04859	-.00571	.01400	.67776	.13641	-.00216	.01497
15.000	.70382	-.02936	.02105	.04869	-.00514	.01504	.68994	.14125	-.00135	.01593
30.000	.72145	-.02629	.00669	.05037	-.00443	.01624	.70703	.14640	-.00037	.01683
45.000	.73341	-.02871	.00154	.05126	-.00423	.01654	.71657	.14958	-.00000	.01746
60.000	.74033	-.02874	-.00381	.05326	-.00405	.01759	.72563	.15130	.00032	.01804
GRADIENT	.00419	-.00105	-.00552	.00075	.00072	-.00014	.00432	-.00002	.00065	-.00031

ORIGINAL PAGE IS
OF POOR QUALITY

CA20 747/1 01 SI ORBITER DATA (NGN125) (11 MAR 75)

REFERENCE DATA

SREF = 2690.0000 SQ.FT. XMRP = 1109.0000 IN.XO
LREF = 474.8100 IN. YMRP = .0000 IN.YO
BREF = 936.6800 IN. ZMRP = 375.0000 IN.ZO
SCALE = .0300

PARAMETRIC DATA

ELV-IB =	.000	ELV-OB =	.000
ELEVON =	5.000	MACH =	.600
BETAO =	-5.000	PHI =	.000
DX =	.000	DY =	10.000
BETAC =	5.000	ALPHAC =	8.000

RN/L = 3.23 GRADIENT INTERVAL = .00/ 12.00

ALPHAO = 10.000

DZ	CN	CA	CLM	CY	CBL	CYN	CL	CD	CSL	CLN
.000	.27778	-.00731	.03799	.05225	-.01932	.00841	.27483	.04103	-.01757	.01164
3.000	.30272	-.00752	.02565	.05156	-.01691	.01003	.29943	.04516	-.01491	.01282
7.500	.33502	-.00778	.01618	.05061	-.01441	.01141	.33128	.05052	-.01221	.01374
15.000	.37604	-.00879	.00843	.05022	-.01135	.01300	.37186	.05654	-.00892	.01477
30.000	.43477	-.01018	.00002	.04963	-.00774	.01518	.42993	.06547	-.00498	.01630
45.000	.47135	-.01141	-.00611	.05057	-.00569	.01618	.46617	.07082	-.00279	.01692
60.000	.50670	-.01249	-.01226	.05171	-.00371	.01700	.50118	.07559	-.00071	.01738
GRADIENT	.00760	-.00006	-.00284	-.00022	.00065	.00039	.00749	.00126	.00071	.00027

RN/L = 3.23 GRADIENT INTERVAL = .00/ 12.00

ALPHAO = 14.000

DZ	CN	CA	CLM	CY	CBL	CYN	CL	CD	CSL	CLN
.000	.51291	-.02337	.08232	.05637	-.01804	.00867	.50333	.10141	-.01541	.01278
3.000	.54193	-.02638	.05824	.05542	-.01374	.00981	.53221	.10550	-.01096	.01284
7.500	.57013	-.02747	.04413	.05333	-.01021	.01193	.55984	.11128	-.00702	.01404
15.000	.60788	-.02798	.03080	.05081	-.00680	.01375	.59659	.11931	-.00327	.01499
30.000	.65996	-.02839	.01814	.04948	-.00413	.01593	.64722	.13213	-.00014	.01650
45.000	.69143	-.02773	.00874	.05104	-.00354	.01653	.67760	.14035	.00056	.01699
60.000	.71250	-.02757	.00086	.05275	-.00364	.01721	.69801	.14562	.00063	.01758
GRADIENT	.00752	-.00052	-.00494	-.00043	.00102	.00044	.00742	.00131	.00110	.00018

CA20 747/1 02 SI ORBITER DATA (NGN126) (11 MAR 75)

REFERENCE DATA

SREF = 2690.0000 SQ.FT. XMRP = 1109.0000 IN.XO
LREF = 474.8100 IN. YMRP = .0000 IN.YO
BREF = 936.6800 IN. ZMRP = 375.0000 IN.ZO
SCALE = .0300

PARAMETRIC DATA

ALPHAC =	4.000	BETAC =	-5.000
ELV-IB =	.000	ELV-OB =	3.000
ELEVON =	5.000	MACH =	.600
BETAO =	.000	PHI =	.000
DY =	.000	DX =	.000

RUN NO. 0/ 0 RN/L = 3.28 GRADIENT INTERVAL = .00/ 12.00

ALPHAO	DZ	CN	CA	CLM	CY	CBL	CYN	CL	CD	CSL	CLN
10.000	.000	.43938	.02238	.04821	-.00924	.00398	.00044	.42882	.09933	.00399	-.00026
10.000	3.000	.45295	.02072	.03772	-.00723	.00184	.00071	.44247	.09306	.00194	.00039
10.000	7.500	.46346	.02088	.03259	-.00527	.00081	.00093	.45279	.10105	.00095	.00077
10.000	15.000	.47891	.02062	.02642	-.00274	-.00041	.00106	.46806	.10347	-.00022	.00111
10.000	30.000	.50405	.02080	.01931	.00033	-.00143	.00081	.49278	.10801	-.00127	.00105
10.000	45.000	.51902	.02102	.01445	.00126	-.00214	.00037	.50748	.11082	-.00204	.00074
10.000	60.000	.53269	.02128	.01005	.00165	-.00276	.00004	.52089	.11346	-.00271	.00052
	GRADIENT	.00314	-.00018	-.00201	.00052	-.00041	.00006	.00312	.00037	-.00039	.00013

CA20 747/1 02 SI ORBITER DATA (NGN127) (11 MAR 75)

REFERENCE DATA

SREF = 2690.0000 SQ.FT. XMRP = 1109.0000 IN.XO
LREF = 474.8100 IN. YMRP = .0000 IN.YO
BREF = 936.6800 IN. ZMRP = 375.0000 IN.ZO
SCALE = .0300

PARAMETRIC DATA

ALPHAC =	4.000	BETAC =	-5.000
ELV-IB =	.000	ELV-OB =	3.000
ELEVON =	5.000	MACH =	.600
BETAO =	.000	PHI =	.000
DY =	.000	DX =	10.000

RUN NO. 0/ 0 RN/L = 3.34 GRADIENT INTERVAL = .00/ 12.00

ALPHAO	DZ	CN	CA	CLM	CY	CBL	CYN	CL	CD	CSL	CLN
10.000	.000	.40431	.02394	.03887	-.00843	.00442	.00004	.39401	.09378	.00436	-.00073
10.000	3.000	.42056	.02231	.02957	-.00672	.00242	.00036	.41030	.09500	.00245	-.00007
10.000	7.500	.43444	.02203	.02522	-.00509	.00112	.00060	.42401	.09713	.00120	.00040
10.000	15.000	.45443	.02115	.02043	-.00274	-.00024	.00069	.44365	.09974	-.00012	.00072
10.000	30.000	.48582	.02057	.01547	-.00007	-.00136	.00064	.47487	.10462	-.00122	.00087
10.000	45.000	.50664	.02068	.01204	.00119	-.00207	.00026	.49437	.10817	-.00200	.00082
10.000	60.000	.52315	.02076	.00908	.00244	-.00284	.00005	.51160	.11128	-.00279	.00054
	GRADIENT	.00394	-.00024	-.00175	.00044	-.00043	.00007	.00392	.00045	-.00041	.00015

CA20 747/1 02 SI ORBITER DATA (NGN128) (11 MAR 75)

REFERENCE DATA

SREF = 2690.0000 SQ.FT. XMRP = 1109.0000 IN.XO
LREF = 474.8100 IN. YMRP = .0000 IN.YO
BREF = 936.6800 IN. ZMRP = 375.0000 IN.ZO
SCALE = .0300

PARAMETRIC DATA

ALPHAC = 4.000 BETAC = -5.000
ELV-IB = .000 ELV-OB = 3.000
ELEVON = 5.000 MACH = .600
BETAO = .000 PHI = .000
DY = .000 DX = 20.000

RUN NO. 0/ 0 RN/L = 3.32 GRADIENT INTERVAL = .00/ 12.00

ALPHAO	DZ	CN	CA	CLM	CY	CBL	CYN	CL	CD	CSL	CLN
10.000	.000	.38188	.02632	.03156	-.00870	.00543	.00038	.37151	.09224	.00541	-.00056
10.000	3.000	.40132	.02434	.02204	-.00681	.00332	.00061	.39099	.09366	.00338	.00003
10.000	7.500	.41859	.02336	.01805	-.00438	.00185	.00074	.40817	.09569	.00195	.00040
10.000	15.000	.44280	.02173	.01398	-.00234	.00034	.00083	.43230	.09929	.00048	.00076
10.000	30.000	.47769	.02034	.01106	.00019	-.00085	.00075	.46689	.10298	-.00071	.00088
10.000	45.000	.49907	.01986	.00912	.00139	-.00170	.00048	.48804	.10522	-.00159	.00077
10.000	60.000	.51857	.01895	.00827	.00317	-.00263	.00041	.50740	.10872	-.00252	.00085
	GRADIENT	.00481	-.00038	-.00173	.00057	-.00046	.00005	.00480	.00046	-.00045	.00013

CA20 747/1 02 SI ORBITER DATA (NGN129) (11 MAR 75)

REFERENCE DATA

SREF = 2690.0000 SQ.FT. XMRP = 1109.0000 IN.XO
LREF = 474.8100 IN. YMRP = .0000 IN.YO
BREF = 936.6800 IN. ZMRP = 375.0000 IN.ZO
SCALE = .0300

PARAMETRIC DATA

BETAC = .000 ELV-IB = .000
ELV-OB = 3.000 ELEVON = 5.000
MACH = .600 BETAO = .000
PHI = .000 DY = .000
DX = .000 ALPHAC = 4.000

RN/L = 3.31 GRADIENT INTERVAL = .00/ 12.00

ALPHAO = 10.000

DZ	CN	CA	CLM	CY	CBL	CYN	CL	CD	CSL	CLN
.000	.39342	.01641	.04523	-.00194	-.00390	-.00001	.39460	.08447	-.00384	.00056
3.000	.40357	.01576	.03574	-.00181	-.00345	.00007	.39470	.08550	-.00339	.00067
7.500	.41658	.01589	.02914	-.00153	-.00314	.00012	.40749	.08799	-.00307	.00067
15.000	.43390	.01615	.02364	-.00144	-.00284	.00018	.42450	.09125	-.00276	.00067
30.000	.46398	.01604	.01662	.00018	-.00253	.00036	.45415	.09536	-.00243	.00080
45.000	.48266	.01599	.01232	.00075	-.00285	.00009	.47255	.09555	-.00279	.00059
60.000	.49939	.01621	.00849	.00085	-.00330	-.00021	.48939	.10269	-.00329	.00037
GRADIENT	.00307	-.00006	-.00209	.00005	.00010	.00002	.00304	.00047	.00010	.00000

CA20 747/1 02 S1 ORBITER DATA (NGN129) (11 MAR 75)

REFERENCE DATA

SREF =	2690.0000 SQ.FT.	XMRP =	1109.0000 IN.XO		
LREF =	474.8100 IN.	YMRP =	.0000 IN.YO		
BREF =	936.6900 IN.	ZMRP =	375.0000 IN.ZO		
SCALE =	.0300				

PARAMETRIC DATA

BETAC =	.000	ELV-IB =	.000
ELV-OB =	3.000	ELEVON =	5.000
MACH =	.600	BETAO =	.000
PHI =	.000	DY =	.000
DX =	.000	ALPHAC =	4.000

RN/L = 3.29 GRADIENT INTERVAL = .00/ 12.00

ALPHAO = 14.000

DZ	CN	CA	CLM	CY	CBL	CYN	CL	CD	CSL	CLN
.000	.66652	.00611	.05598	-.00168	-.00258	.00057	.64524	.16718	-.00237	.00118
3.000	.66319	.00555	.05222	-.00107	-.00254	.00053	.64215	.16582	-.00234	.00113
7.500	.66334	.00580	.04752	-.00073	-.00240	.00050	.64223	.16510	-.00221	.00107
15.000	.67149	.00724	.04154	-.00035	-.00216	.00049	.64979	.16947	-.00198	.00100
30.000	.68973	.00903	.03358	.00163	-.00227	.00027	.66706	.17562	-.00214	.00091
45.000	.70290	.00959	.02844	.00192	-.00220	.00032	.67968	.17945	-.00205	.00085
60.000	.71200	.00922	.02439	.00264	-.00211	.00057	.68862	.18119	-.00191	.00106
GRADIENT	-.00039	-.00003	-.00112	.00012	.00002	-.00001	-.00037	-.00013	.00002	-.00001

CA20 747/1 02 S1 ORBITER DATA (NGN130) (11 MAR 75)

REFERENCE DATA

SREF =	2690.0000 SQ.FT.	XMRP =	1109.0000 IN.XO		
LREF =	474.8100 IN.	YMRP =	.0000 IN.YO		
BREF =	936.6900 IN.	ZMRP =	375.0000 IN.ZO		
SCALE =	.0300				

PARAMETRIC DATA

BETAC =	.000	ELV-IB =	.000
ELV-OB =	3.000	ELEVON =	5.000
MACH =	.600	BETAO =	.000
PHI =	.000	DY =	.000
DX =	10.000	ALPHAC =	4.000

RN/L = 3.30 GRADIENT INTERVAL = .00/ 12.00

ALPHAO = 10.000

DZ	CN	CA	CLM	CY	CBL	CYN	CL	CD	CSL	CLN
.000	.39308	.01811	.03381	-.00191	-.00366	-.00019	.37412	.08435	-.00354	.00045
3.000	.39393	.01745	.02706	-.00151	-.00347	-.00016	.38491	.08559	-.00344	.00045
7.500	.40753	.01740	.02272	-.00114	-.00339	-.00012	.39932	.08791	-.00336	.00047
15.000	.42843	.01718	.01822	-.00099	-.00314	.00007	.41854	.09131	-.00308	.00052
30.000	.46072	.01645	.01342	.00010	-.00270	.00026	.45086	.09620	-.00281	.00072
45.000	.48136	.01628	.01034	.00046	-.00295	.00003	.47122	.09862	-.00290	.00054
60.000	.49338	.01672	.00728	.00108	-.00332	-.00014	.48369	.10318	-.00329	.00044
GRADIENT	.00324	-.00009	-.00144	.00010	.00003	.00001	.00321	.00048	.00004	.00000

CA20 747/1 02 S1 ORBITER DATA (NGN130) (11 MAR 75)

REFERENCE DATA

SREF = 2690.0000 SQ.FT. XMRP = 1109.0000 IN.XO
LREF = 474.8100 IN. YMRP = .0000 IN.YO
BREF = 936.6800 IN. ZMRP = 375.0000 IN.ZO
SCALE = .0300

PARAMETRIC DATA

BETAC =	.000	ELV-IB =	.000
ELV-OB =	3.000	ELEVON =	5.000
MACH =	.600	BETAO =	.000
PHI =	.000	DY =	.000
DX =	10.000	ALPHAC =	4.000

RN/L = 3.31 GRADIENT INTERVAL = .00/ 12.00

ALPHAO = 14.000

DZ	CN	CA	CLM	CY	CBL	CYN	CL	CD	CSL	CLN
.000	.63398	-.00169	.04963	-.00255	-.00275	.00143	.61556	.15173	-.00232	.00206
3.000	.63568	-.00225	.04671	-.00278	-.00196	.00156	.61734	.15161	-.00252	.00199
7.500	.64236	-.00129	.04272	-.00307	-.00101	.00166	.62359	.15415	-.00258	.00185
15.000	.65759	.00098	.03738	-.00269	-.00029	.00157	.63782	.16003	.00010	.00159
30.000	.69175	.00412	.03104	-.00011	-.00079	.00111	.66050	.16893	-.00049	.00127
45.000	.69823	.00613	.02694	.00031	-.00118	.00078	.67600	.17486	-.00086	.00104
60.000	.70885	.00663	.02369	.00136	-.00142	.00064	.68619	.17792	-.00117	.00116
GRADIENT	.00115	.00007	-.00092	-.00007	.00023	.00003	.00110	.00034	.00023	-.00003

CA20 747/1 02 S1 ORBITER DATA (NGN131) (11 MAR 75)

REFERENCE DATA

SREF = 2690.0000 SQ.FT. XMRP = 1109.0000 IN.XO
LREF = 474.8100 IN. YMRP = .0000 IN.YO
BREF = 936.6800 IN. ZMRP = 375.0000 IN.ZO
SCALE = .0300

PARAMETRIC DATA

BETAC =	.000	ELV-IB =	.000
ELV-OB =	3.000	ELEVON =	5.000
MACH =	.600	BETAO =	.000
PHI =	.000	DY =	.000
DX =	20.000	ALPHAC =	4.000

RN/L = 3.29 GRADIENT INTERVAL = .00/ 12.00

ALPHAO = 10.000

DZ	CN	CA	CLM	CY	CBL	CYN	CL	CD	CSL	CLN
.000	.36583	.02184	.02579	-.00342	-.00303	-.00022	.35548	.08504	-.00302	.00031
3.000	.37890	.02056	.01980	-.00318	-.00279	-.00009	.36957	.08504	-.00276	.00040
7.500	.39468	.01973	.01589	-.00349	-.00272	-.00000	.38526	.08796	-.00288	.00047
15.000	.41789	.01852	.01285	-.00289	-.00262	.00013	.40832	.09080	-.00255	.00059
30.000	.45249	.01784	.00963	-.00131	-.00254	.00025	.44252	.09614	-.00246	.00069
45.000	.47512	.01722	.00821	-.00129	-.00248	-.00001	.46491	.09946	-.00241	.00042
60.000	.49446	.01699	.00747	-.00060	-.00261	-.00038	.48400	.10259	-.00264	.00007
GRADIENT	.00392	-.00027	-.00128	-.00001	.00004	.00003	.00391	.00039	.00004	.00002

CA20 747/1 02 SI ORBITER DATA (NGN131) (11 MAR 75)

REFERENCE DATA

SREF = 2690.0000 SQ.FT. XMRP = 1109.0000 IN.XO
LREF = 474.8100 IN. YMRP = .0000 IN.YO
BREF = 936.6800 IN. ZMRP = 375.0000 IN.ZO
SCALE = .0300

PARAMETRIC DATA

BETAC =	.000	ELV-IB =	.000
ELV-OB =	3.000	ELEVON =	5.000
MACH =	.600	BETAO =	.000
PHI =	.000	DY =	.000
DX =	20.000	ALPHAC =	4.000

RN/L = 3.30 GRADIENT INTERVAL = .00/ 12.00

ALPHAO = 14.000

DZ	CN	CA	CLM	CY	CBL	CYN	CL	CD	CSL	CLN
.000	.61045	-.00222	.04303	-.00435	-.00336	.00095	.59285	.14553	-.00303	.00174
3.000	.61519	-.00354	.04082	-.00408	-.00304	.00103	.59777	.14539	-.00270	.00174
7.500	.62677	-.00226	.03692	-.00415	-.00227	.00131	.60884	.14865	-.00189	.00182
15.000	.64615	-.00065	.03258	-.00477	-.00091	.00178	.62712	.15569	-.00046	.00185
30.000	.67781	.00173	.02744	-.00350	.00025	.00167	.65725	.16586	.00065	.00185
45.000	.69375	.00569	.02465	-.00085	-.00146	.00047	.67177	.17335	-.00130	.00081
60.000	.70465	.00726	.02276	.00069	-.00203	.00040	.68216	.17757	-.00168	.00068
GRADIENT	.00221	-.00007	-.00082	.00002	.00015	.00005	.00216	.00047	.00015	.00001

CA20 747/1 02 SI ORBITER DATA (NGN132) (11 MAR 75)

REFERENCE DATA

SREF = 2690.0000 SQ.FT. XMRP = 1109.0000 IN.XO
LREF = 474.8100 IN. YMRP = .0000 IN.YO
BREF = 936.6800 IN. ZMRP = 375.0000 IN.ZO
SCALE = .0300

PARAMETRIC DATA

BETAC =	.000	ELV-IB =	.000
ELV-OB =	3.000	ELEVON =	5.000
MACH =	.600	BETAO =	.000
PHI =	.000	DY =	.000
DX =	.000	ALPHAC =	8.000

RN/L = 3.29 GRADIENT INTERVAL = .00/ 12.00

ALPHAO = 10.000

DZ	CN	CA	CLM	CY	CBL	CYN	CL	CD	CSL	CLN
.000	.24237	.02714	.03726	-.00210	-.00414	.00017	.23357	.06892	-.00405	.00089
3.000	.26473	.02612	.03346	-.00157	-.00379	.00006	.25617	.07170	-.00372	.00072
7.500	.28290	.02524	.02987	-.00113	-.00355	-.00000	.28407	.07572	-.00350	.00052
15.000	.33322	.02420	.02500	-.00101	-.00326	.00008	.32405	.08172	-.00320	.00065
30.000	.39211	.02192	.01923	.00024	-.00306	.00009	.38234	.08958	-.00299	.00052
45.000	.42971	.02079	.01440	.00069	-.00322	-.00014	.41557	.09509	-.00320	.00042
60.000	.46190	.02035	.00943	.00156	-.00312	-.00007	.45135	.10025	-.00309	.00047
GRADIENT	.00670	-.00025	-.00097	.00013	.00008	-.00002	.00654	.00092	.00007	-.00003

ORIGINAL PAGE IS
OF POOR QUALITY

CA20 747/1 02 S1 ORBITER DATA (NGN132) (11 MAR 75)

REFERENCE DATA

SREF = 2690.0000 SQ.FT. XMRP = 1109.0000 IN.XO
LREF = 474.8100 IN. YMRP = .0000 IN.YO
BREF = 936.5800 IN. ZMRP = 375.0000 IN.ZO
SCALE = .0300

PARAMETRIC DATA

BETAC =	.000	ELV-IB =	.000
ELV-OB =	3.000	ELEVON =	5.000
MACH =	.600	BETAO =	.000
PHI =	.000	DY =	.000
DX =	.000	ALPHAC =	8.000

RN/L = 3.28 GRADIENT INTERVAL = .00/ 12.00

ALPHAO = 14.000

DZ	CN	CA	CLM	CY	CBL	CYN	CL	CD	CSL	CLN
.000	.49978	.00517	.06584	-.00188	-.00440	.00077	.48368	.12592	-.00408	.00181
3.000	.51772	.00434	.05845	-.00194	-.00387	.00091	.50129	.12946	-.00354	.00182
7.500	.54040	.00437	.05236	-.00212	-.00355	.00114	.52329	.13497	-.00317	.00197
15.000	.57115	.00380	.04690	-.00250	-.00230	.00147	.55327	.14186	-.00187	.00199
30.000	.62397	.00441	.03786	-.00168	-.00119	.00173	.60437	.15523	-.00073	.00197
45.000	.65543	.00514	.03177	-.00107	-.00077	.00152	.63471	.16355	-.00038	.00185
60.000	.67875	.00557	.02665	.00040	-.00046	.00182	.65724	.16951	-.00001	.00187
GRADIENT	.00539	-.00010	-.00176	-.00003	.00011	.00005	.00525	.00121	.00012	.00002

CA20 747/1 02 S1 ORBITER DATA (NGN133) (11 MAR 75)

REFERENCE DATA

SREF = 2690.0000 SQ.FT. XMRP = 1109.0000 IN.XO
LREF = 474.8100 IN. YMRP = .0000 IN.YO
BREF = 936.5800 IN. ZMRP = 375.0000 IN.ZO
SCALE = .0300

PARAMETRIC DATA

BETAC =	.000	ELV-IB =	.000
ELV-OB =	3.000	ELEVON =	5.000
MACH =	.600	BETAO =	.000
PHI =	.000	DY =	.000
DX =	10.000	ALPHAC =	8.000

RN/L = 3.32 GRADIENT INTERVAL = .00/ 12.00

ALPHAO = 10.000

DZ	CN	CA	CLM	CY	CBL	CYN	CL	CD	CSL	CLN
.000	.22076	.02932	.02271	-.00248	-.00384	-.00016	.21232	.06721	-.00330	.00051
3.000	.24202	.02818	.01979	-.00221	-.00354	-.00012	.23345	.06978	-.00351	.00050
7.500	.27007	.02699	.01767	-.00183	-.00329	-.00009	.26128	.07348	-.00325	.00048
15.000	.31293	.02521	.01533	-.00148	-.00290	-.00002	.30380	.07917	-.00286	.00049
30.000	.37864	.02265	.01263	-.00032	-.00274	.00007	.36855	.08805	-.00269	.00054
45.000	.42081	.02128	.01033	.00053	-.00250	-.00012	.41072	.09403	-.00287	.00038
60.000	.45733	.02001	.00847	.00152	-.00310	.00001	.44650	.09912	-.00305	.00054
GRADIENT	.00555	-.00031	-.00066	.00009	.00007	.00001	.00650	.00093	.00007	-.00000

CA20 747/1 02 S1 ORBITER DATA (NGN133) (11 MAR 75)

REFERENCE DATA

SREF =	2690.0000 SQ.FT.	XMRP =	1109.0000 IN.XO		
LREF =	474.8100 IN.	YMRP =	.0000 IN.YO		
BREF =	935.6900 IN.	ZMRP =	375.0000 IN.ZO		
SCALE =	.0300				

PARAMETRIC DATA

BETAC =	.000	ELV-IB =	.000
ELV-OB =	3.000	ELEVON =	5.000
MACH =	.600	BETAO =	.000
PHI =	.000	DY =	.000
DX =	10.000	ALPHAC =	8.000

RN/L = 3.30 GRADIENT INTERVAL = .00/ 12.00

ALPHAO = 14.000

DZ	CN	CA	CLM	CY	CBL	CYN	CL	CD	CSL	CLN
.000	.48234	.00617	.04986	-.00130	-.00437	-.00002	.44712	.11784	-.00424	.00103
3.000	.48171	.00472	.04447	-.00128	-.00379	.00012	.46926	.12112	-.00365	.00103
7.500	.50716	.00391	.04089	-.00146	-.00343	.00030	.49115	.12649	-.00325	.00112
15.000	.54609	.00236	.03737	-.00192	-.00316	.00078	.52930	.13440	-.00287	.00152
30.000	.60782	.00206	.03230	-.00153	-.00228	.00152	.58936	.14907	-.00165	.00203
45.000	.64715	.00272	.02799	-.00222	-.00105	.00159	.62727	.15920	-.00063	.00178
60.000	.67284	.00366	.02490	-.00103	-.00069	.00203	.65159	.16523	-.00018	.00213
GRADIENT	.00595	-.00029	-.00116	-.00002	.00012	.00004	.00584	.00116	.00013	.00001

CA20 747/1 02 S1 ORBITER DATA (NGN134) (11 MAR 75)

REFERENCE DATA

SREF =	2690.0000 SQ.FT.	XMRP =	1109.0000 IN.XO		
LREF =	474.8100 IN.	YMRP =	.0000 IN.YO		
BREF =	935.6900 IN.	ZMRP =	375.0000 IN.ZO		
SCALE =	.0300				

PARAMETRIC DATA

BETAC =	.000	ELV-IB =	.000
ELV-OB =	3.000	ELEVON =	5.000
MACH =	.600	BETAO =	.000
PHI =	.000	DY =	.000
DX =	20.000	ALPHAC =	8.000

RN/L = 3.27 GRADIENT INTERVAL = .00/ 12.00

ALPHAO = 10.000

DZ	CN	CA	CLM	CY	CBL	CYN	CL	CD	CSL	CLN
.000	.21545	.03068	.01131	-.00358	-.00308	-.00067	.20685	.06782	-.00315	-.00013
3.000	.23783	.02900	.00725	-.00351	-.00265	-.00059	.22928	.06938	-.00271	-.00012
7.500	.26692	.02745	.00544	-.00303	-.00250	-.00043	.25721	.07322	-.00254	.00001
15.000	.30680	.02571	.00709	-.00211	-.00248	-.00012	.29768	.07659	-.00247	.00031
30.000	.37373	.02317	.00612	-.00116	-.00208	-.00003	.35403	.08771	-.00206	.00033
45.000	.41772	.02139	.00618	.00027	-.00230	.00008	.40765	.09351	-.00225	.00048
60.000	.45489	.01950	.00754	.00159	-.00319	.00018	.44459	.09819	-.00306	.00072
GRADIENT	.00570	-.00042	-.00061	.00008	.00007	.00003	.00567	.00075	.00008	.00002

CA20 747/1 02 S1 ORBITER DATA (NGN134) (11 MAR 75)

REFERENCE DATA

SREF = 2690.0000 SQ.FT. XMRP = 1109.0000 IN.XO
LREF = 474.8100 IN. YMRP = .0000 IN.YO
BREF = 936.6800 IN. ZMRP = 375.0000 IN.ZO
SCALE = .0300

PARAMETRIC DATA

BETAC = .000 ELV-IB = .000
ELV-OB = 3.000 ELEVON = 5.000
MACH = .600 BETAO = .000
PHI = .000 DY = .000
DX = 20.000 ALPHAC = 8.000

RN/L = 3.29 GRADIENT INTERVAL = .00/ 12.00

ALPHAO = 14.000

DZ	CN	CA	CLM	CY	CBL	CYN	CL	CD	CSL	CLN
.000	.44956	.00707	.03481	-.00311	-.00387	-.00040	.43459	.11562	-.00386	.00054
3.000	.47032	.00559	.02994	-.00297	-.00334	-.00025	.45500	.11920	-.00330	.00057
7.500	.49387	.00416	.02858	-.00286	-.00293	-.00003	.47819	.12351	-.00285	.00068
15.000	.53324	.00254	.02737	-.00302	-.00232	.00037	.51679	.13147	-.00216	.00092
30.000	.59653	.00082	.02652	-.00290	-.00285	.00123	.57861	.14511	-.00248	.00189
45.000	.64056	.00107	.02407	-.00313	-.00162	.00141	.62128	.15601	-.00124	.00176
60.000	.66693	.00117	.02319	-.00256	-.00071	.00234	.64674	.16245	-.00012	.00244
GRADIENT	.00585	-.00038	-.00079	.00003	.00012	.00005	.00577	.00104	.00013	.00002

CA20 747/1 02 S1 ORBITER DATA (NGN135) (11 MAR 75)

REFERENCE DATA

SREF = 2690.0000 SQ.FT. XMRP = 1109.0000 IN.XO
LREF = 474.8100 IN. YMRP = .0000 IN.YO
BREF = 936.6800 IN. ZMRP = 375.0000 IN.ZO
SCALE = .0300

PARAMETRIC DATA

ALPHAC = 4.000 BETAC = -5.000
ELV-IB = .000 ELV-OB = 3.000
ELEVON = 5.000 MACH = .600
BETAO = .000 PHI = .000
DY = 10.000 DX = .000

RUN NO. 0/ 0 RN/L = 3.27 GRADIENT INTERVAL = .00/ 12.00

ALPHAO	DZ	CN	CA	CLM	CY	CBL	CYN	CL	CD	CSL	CLN
10.000	.000	.46870	.02185	.03602	-.00650	-.00470	-.00177	.45779	.10291	-.00493	-.00092
10.000	3.000	.47140	.02125	.03280	-.00675	-.00460	-.00139	.46055	.10278	-.00477	-.00057
10.000	7.500	.47669	.02082	.03036	-.00585	-.00442	-.00088	.46592	.10328	-.00451	-.00010
10.000	15.000	.48782	.02059	.02697	-.00409	-.00412	-.00031	.47694	.10497	-.00411	.00041
10.000	30.000	.50822	.02063	.02138	-.00090	-.00372	.00060	.49691	.10857	-.00356	.00123
10.000	45.000	.52356	.02078	.01655	.00095	-.00355	.00066	.51200	.11139	-.00339	.00127
10.000	60.000	.53979	.02099	.01192	.00277	-.00338	.00082	.52784	.11441	-.00318	.00139
	GRADIENT	.00107	-.00013	-.00074	.00010	.00004	.00012	.00108	.00005	.00006	.00011

CA20 747/1 02 SI ORBITER DATA (NGN135) (11 MAR 75)

REFERENCE DATA

SREF = 2689.0000 SQ.FT. XMRP = 1109.0000 IN.XO
LREF = 474.8100 IN. YMRP = .0000 IN.YO
BREF = 936.6800 IN. ZMRP = 375.0000 IN.ZO
SCALE = .0300

PARAMETRIC DATA

ALPHAC = 4.000 BETAC = -5.000
ELV-IB = .000 ELV-OB = 3.000
ELEVON = 5.000 MACH = .600
BETAO = .000 PHI = .000
DY = 10.000 DX = 10.000

RUN NO. 0/ 0 RN/L = 3.26 GRADIENT INTERVAL = .00/ 12.00

ALPHAO	DZ	CN	CA	CLM	CY	CBL	CYN	CL	CD	CSL	CLN
10.000	.000	.43224	.02351	.02794	-.00599	-.00350	-.00155	.42159	.09821	-.00372	-.00092
10.000	3.000	.43982	.02254	.02495	-.00618	-.00367	-.00131	.42804	.09936	-.00384	-.00086
10.000	7.500	.44729	.02150	.02336	-.00564	-.00383	-.00103	.43685	.09886	-.00395	-.00035
10.000	15.000	.46383	.02069	.02124	-.00411	-.00384	-.00041	.45319	.10092	-.00386	.00026
10.000	30.000	.48951	.02003	.01783	-.00028	-.00369	.00039	.47859	.10473	-.00357	.00102
10.000	45.000	.50730	.02035	.01387	.00127	-.00355	.00057	.49506	.10813	-.00340	.00118
10.000	60.000	.52447	.02076	.01046	.00217	-.00341	.00061	.51290	.11152	-.00325	.00119
	GRADIENT	.00201	-.00027	-.00059	.00005	-.00004	.00007	.00203	.00009	-.00003	.00007

CA20 747/1 02 SI ORBITER DATA (NGN137) (11 MAR 75)

REFERENCE DATA

SREF = 2690.0000 SQ.FT. XMRP = 1109.0000 IN.XO
LREF = 474.8100 IN. YMRP = .0000 IN.YO
BREF = 936.6900 IN. ZMRP = 375.0000 IN.ZO
SCALE = .0300

PARAMETRIC DATA

ALPHAC = 4.000 BETAC = .000
ELV-IB = .000 ELV-OB = 3.000
ELEVON = 5.000 MACH = .600
BETAO = .000 PHI = .000
DY = 10.000 DX = .000

RUN NO. 0/ 0 RN/L = 3.35 GRADIENT INTERVAL = .00/ 12.00

ALPHAO	DZ	CN	CA	CLM	CY	CBL	CYN	CL	CD	CSL	CLN
10.000	.000	.46567	.01883	.04157	-.00121	-.00999	-.00266	.45533	.09941	-.01030	-.00089
10.000	3.000	.46976	.01885	.03684	-.00245	-.00840	-.00217	.45939	.09995	-.00855	-.00069
10.000	7.500	.47693	.01904	.03320	-.00272	-.00729	-.00165	.46638	.10157	-.00746	-.00037
10.000	15.000	.48856	.01946	.02840	-.00251	-.00593	-.00093	.47776	.10400	-.00600	.00011
10.000	30.000	.50934	.02009	.02179	-.00107	-.00459	.00005	.49811	.10823	-.00451	.00084
10.000	45.000	.52385	.02063	.01656	.00054	-.00408	.00041	.51231	.11128	-.00395	.00111
10.000	60.000	.53980	.02118	.01160	.00224	-.00349	.00088	.52792	.11459	-.00330	.00139
	GRADIENT	.00151	.00003	-.00109	-.00019	.00035	.00013	.00148	.00029	.00037	.00007

CA20 747/1 02 SI ORBITER DATA (NGN138) (11 MAR 75)

REFERENCE DATA

SREF = 2690.0000 SQ.FT. XMRP = 1109.0000 IN.XO
LREF = 474.8100 IN. YMRP = .0000 IN.YO
BREF = 936.6800 IN. ZMRP = 375.0000 IN.ZO
SCALE = .0300

PARAMETRIC DATA

ALPHAC =	4.000	BETAC =	.000
ELV-IB =	.00[illegible]	ELV-OB =	3.000
ELEVON =	5.000	MACH =	.600
BETAO =	.000	PHI =	.000
DY =	10.000	DX =	10.000

RUN NO. 0/ 0 RN/L = 3.29 GRADIENT INTERVAL = .00/ 12.00

ALPHAO	DZ	CN	CA	CLM	CY	CBL	CYN	CL	CD	CSL	CLN
10.000	.000	.43278	.01999	.03284	-.00205	-.00349	-.00247	.42273	.09484	-.00977	-.00078
10.000	3.000	.43954	.01942	.02877	-.00296	-.00809	-.00206	.42949	.09545	-.00832	-.00062
10.000	7.500	.44851	.01915	.02582	-.00322	-.00702	-.00165	.43847	.09676	-.00720	-.00041
10.000	15.000	.46465	.01912	.02254	-.00283	-.00584	-.00101	.45427	.09952	-.00592	.00001
10.000	30.000	.49035	.01939	.01783	-.00070	-.00465	-.00008	.47953	.10425	-.00460	.00073
10.000	45.000	.50828	.01985	.01376	.00077	-.00408	.00037	.49711	.10781	-.00395	.00108
10.000	60.000	.52510	.02038	.01041	.00204	-.00355	.00054	.51457	.11142	-.00340	.00115
	GRADIENT	.00210	-.00011	-.00091	-.00015	.00032	.00011	.00209	.00026	.00034	.00005

CA20 747/1 02 SI ORBITER DATA (NGN139) (11 MAR 75)

REFERENCE DATA

SREF = 2690.0000 SQ.FT. XMRP = 1109.0000 IN.XO
LREF = 474.8100 IN. YMRP = .0000 IN.YO
BREF = 936.6800 IN. ZMRP = 375.0000 IN.ZO
SCALE = .0300

PARAMETRIC DATA

ALPHAC =	4.000	BETAC =	5.000
ELV-IB =	.000	ELV-OB =	3.000
ELEVON =	5.000	MACH =	.600
BETAO =	.000	PHI =	.000
DY =	10.000	DX =	.000

RUN NO. 0/ 0 RN/L = 3.25 GRADIENT INTERVAL = .00/ 12.00

ALPHAO	DZ	CN	CA	CLM	CY	CBL	CYN	CL	CD	CSL	CLN
10.000	.000	.46507	.01783	.05127	-.00274	-.01653	-.00450	.45491	.09831	-.01706	-.00155
10.000	3.000	.46974	.01814	.04410	-.00310	-.01301	-.00357	.45945	.09944	-.01343	-.00126
10.000	7.500	.47857	.01905	.03823	-.00306	-.01050	-.00272	.46799	.10186	-.01081	-.00085
10.000	15.000	.49092	.01914	.03126	-.00280	-.00785	-.00163	.48014	.10410	-.00802	-.00025
10.000	30.000	.51224	.02005	.02313	-.00150	-.00554	-.00032	.50097	.10869	-.00561	.00057
10.000	45.000	.52594	.02040	.01707	-.00032	-.00439	.00016	.51441	.11142	-.00429	.00092
10.000	60.000	.54100	.02092	.01167	.00079	-.00314	.00066	.52915	.11454	-.00298	.00120
	GRADIENT	.00181	.00017	-.00170	-.00004	.00079	.00023	.00176	.00048	.00081	.00009

CA20 747/1 02 S1 ORBITER DATA (NGN140) (11 MAR 75)

REFERENCE DATA

SREF =	2690.0000 SQ.FT.	XMRP =	1109.0000 IN.XO		
LREF =	474.8100 IN.	YMRP =	.0000 IN.YO		
BREF =	935.6800 IN.	ZMRP =	375.0000 IN.ZO		
SCALE =	.0300				

PARAMETRIC DATA

ALPHAC =	4.000	BETAC =	5.000
ELV-IB =	.000	ELV-OB =	3.000
ELEVON =	5.000	MACH =	.600
BETAO =	.000	PHI =	.000
DY =	10.000	DX =	10.000

RUN NO. 0/ 0 RN/L = 3.26 GRADIENT INTERVAL = .00/ 12.00

ALPHAO	DZ	CN	CA	CLM	CY	CBL	CYN	CL	CD	CSL	CLN
10.000	.000	.42853	.01744	.04242	-.00344	-.01640	-.00102	.41899	.09159	-.01685	-.00112
10.000	3.000	.43593	.01753	.03604	-.00354	-.01317	-.00323	.42731	.09314	-.01353	-.00090
10.000	7.500	.44883	.01810	.03051	-.00317	-.01058	-.00247	.43897	.09576	-.01085	-.00060
10.000	15.000	.46652	.01875	.02517	-.00289	-.00799	-.00160	.45618	.09948	-.00815	-.00019
10.000	30.000	.49263	.01945	.01914	-.00121	-.00554	-.00033	.48177	.10470	-.00561	.00065
10.000	45.000	.50976	.01939	.01453	-.00006	-.00453	.00017	.49855	.10811	-.00444	.00095
10.000	60.000	.52614	.02045	.01041	.00066	-.00353	.00039	.51460	.11150	-.00341	.00093
	GRADIENT	.00270	.00009	-.00155	.00004	.00076	.00020	.00264	.00056	.00078	.00007

CA20 747/1 01 S1 ORBITER DATA (NGN141) (04 MAR 75)

REFERENCE DATA

SREF =	2690.0000 SQ.FT.	XMRP =	1109.0000 IN.XO		
LREF =	474.8100 IN.	YMRP =	.0000 IN.YO		
BREF =	935.6800 IN.	ZMRP =	375.0000 IN.ZO		
SCALE =	.0300				

PARAMETRIC DATA

ALPHAC =	4.000	BETAC =	.000
ELV-IB =	10.000	ELV-OB =	13.000
ELEVON =	5.000	MACH =	.600
BETAO =	.000	PHI =	.000
DX =	.000	DY =	.000

RN/L = 3.26 GRADIENT INTERVAL = -1.00/ 4.00

ALPHAO = 10.000

DZ	CN	CA	CLM	CY	CBL	CYN	CL	CD	CSL	CLN
.000	.39383	.00297	.05155	-.00166	-.00247	-.00104	.38714	.07128	-.00261	-.00050
3.000	.40743	.00126	.04049	-.00162	-.00224	-.00100	.40102	.07199	-.00239	-.00059
7.500	.42034	.00066	.03566	-.00161	-.00212	-.00091	.41384	.07365	-.00225	-.00053
15.000	.44170	-.00140	.02634	-.00110	-.00187	-.00063	.43324	.07532	-.00195	-.00030
30.000	.46395	-.00197	.01937	-.00066	-.00193	-.00014	.46218	.07949	-.00192	.00019
45.000	.48701	-.00268	.01338	-.00017	-.00203	-.00047	.48008	.08193	-.00209	-.00011
60.000	.50660	-.00314	.00780	.00029	-.00215	-.00062	.49845	.08488	-.00222	-.00023
GRADIENT	.00460	-.00057	-.00369	.00001	.00008	.00002	.00463	.00024	.00008	.00000

CA20 747/1 01 SI ORBITER DATA (NGN141) (04 MAR 75)

REFERENCE DATA

SREF = 2690.0000 SQ.FT. XMRP = 1109.0000 IN.XO
LREF = 474.8100 IN. YMRP = .0000 IN.YO
BREF = 936.6800 IN. ZMRP = 375.0000 IN.ZO
SCALE = .0300

PARAMETRIC DATA

ALPHAC =	4.000	BETAC =	.000
ELV-IB =	10.000	ELV-OB =	13.000
ELEVON =	5.000	MACH =	.600
BETAO =	.000	PHI =	.000
DX =	.000	DY =	.000

RN/L = 3.20 GRADIENT INTERVAL = -1.00/ 4.00

ALPHAO = 14.000

DZ	CN	CA	CLM	CY	CBL	CYN	CL	CD	CSL	CLN
.000	.64450	-.00837	.07725	-.00261	-.00190	-.00006	.62738	.14780	-.00186	.00040
3.000	.65440	-.01268	.05998	-.00194	-.00143	-.00037	.63803	.14681	-.00148	-.00001
7.500	.66235	-.01351	.05070	-.00202	-.00133	-.00033	.64594	.14713	-.00137	-.00000
15.000	.67429	-.01281	.04048	-.00169	-.00111	.00002	.65736	.15070	-.00107	.00029
30.000	.69558	-.01237	.02972	-.00052	-.00120	.00008	.67791	.15527	-.00115	.00037
45.000	.70790	-.01186	.02300	.00014	-.00170	-.00010	.68974	.15974	-.00167	.00032
60.000	.72040	-.01134	.01634	.00079	-.00220	-.00024	.70175	.16328	-.00220	.00030
GRADIENT	.00330	-.00144	-.00576	.00022	.00016	-.00010	.00355	-.00060	.00013	-.00014

CA20 747/1 01 SI ORBITER DATA (NGN142) (04 MAR 75)

REFERENCE DATA

SREF = 2690.0000 SQ.FT. XMRP = 1109.0000 IN.XO
LREF = 474.8100 IN. YMRP = .0000 IN.YO
BREF = 936.6800 IN. ZMRP = 375.0000 IN.ZO
SCALE = .0300

PARAMETRIC DATA

ALPHAC =	4.000	BETAC =	.000
ELV-IB =	-10.000	ELV-OB =	-7.000
ELEVON =	5.000	MACH =	.600
BETAO =	.000	PHI =	.000
DX =	.000	DY =	.000

RN/L = 3.27 GRADIENT INTERVAL = -1.00/ 4.00

ALPHAO = 10.000

DZ	CN	CA	CLM	CY	CBL	CYN	CL	CD	CSL	CLN
.000	.38390	.00236	.05434	-.00168	-.00261	-.00112	.37766	.06899	-.00277	-.00065
3.000	.39385	.00019	.04243	-.00159	-.00235	-.00104	.39275	.06945	-.00250	-.00051
7.500	.41330	-.00092	.03627	-.00199	-.00211	-.00081	.40718	.07086	-.00222	-.00043
15.000	.43275	-.00160	.02898	-.00135	-.00181	-.00064	.42645	.07357	-.00190	-.00031
30.000	.46346	-.00270	.02030	-.00068	-.00178	-.00010	.45699	.07722	-.00177	.00021
45.000	.48168	-.00273	.01452	-.00042	-.00208	-.00048	.47483	.08096	-.00213	-.00011
60.000	.50295	-.00299	.00819	-.00007	-.00231	-.00059	.49593	.08439	-.00238	-.00018
GRADIENT	.00499	-.00072	-.00397	.00003	.00009	.00003	.00503	.00015	.00009	.00001

CA20 7471 01 SI ORBITER DATA (NGN142) (04 MAR 75)

REFERENCE DATA

SREF = 2690.0000 SQ.FT. XMRP = 1109.0000 IN.XO
LREF = 474.8100 IN. YMRP = .0000 IN.YO
BREF = 936.6800 IN. ZMRP = 375.0000 IN.ZO
SCALE = .0300

PARAMETRIC DATA

ALPHAC =	4.000	BETAC =	.000
ELV-IB =	-10.000	ELV-OB =	-7.000
ELEVON =	5.000	MACH =	.600
BETAO =	.000	PHI =	.000
DX =	.000	DY =	.000

RN/L = 3.23 GRADIENT INTERVAL = -1.00/ 4.00

ALPHAO = 14.000

DZ	CN	CA	CLM	CY	CBL	CYN	CL	CD	CSL	CLN
.000	.62579	-.00853	.08235	-.00382	-.00145	.00045	.60927	.14312	-.00130	.00079
3.000	.63465	-.01168	.06557	-.00317	-.00111	.00020	.61862	.14220	-.00103	.00046
7.500	.64342	-.01313	.05406	-.00243	-.00126	-.00004	.62748	.14291	-.00123	.00027
15.000	.65690	-.01305	.04344	-.00169	-.00141	-.00015	.64054	.14626	-.00141	.00020
30.000	.67996	-.01242	.03118	-.00032	-.00142	.00002	.66276	.15244	-.00138	.00035
45.000	.69423	-.01192	.02438	.00001	-.00161	-.00016	.67649	.15638	-.00160	.00024
60.000	.70653	-.01157	.01760	.00026	-.00179	-.00031	.68837	.16021	-.00181	.00013
GRADIENT	.00295	-.00105	-.00556	.00022	.00011	-.00008	.00312	-.00031	.00009	-.00011

CA20 7471 01 SI ORBITER DATA (NGN143) (04 MAR 75)

REFERENCE DATA

SREF = 2690.0000 SQ.FT. XMRP = 1109.0000 IN.XO
LREF = 474.8100 IN. YMRP = .0000 IN.YO
BREF = 936.6800 IN. ZMRP = 375.0000 IN.ZO
SCALE = .0300

PARAMETRIC DATA

ALPHAC =	4.000	BETAC =	.000
RUD-U =	15.000	RUD-L =	15.000
ELEVON =	5.000	AILRON =	.000
BETAO =	.000	PHI =	.000
DX =	.000	DY =	.000

RN/L = 3.27 GRADIENT INTERVAL = -1.00/ 4.00

ALPHAO = 10.000

DZ	CN	CA	CLM	CY	CBL	CYN	CL	CD	CSL	CLN
.000	.39116	.00243	.05282	-.00053	-.00297	-.00123	.38479	.07032	-.00313	-.00070
3.000	.40569	.00034	.04062	-.00046	-.00267	-.00113	.39946	.07078	-.00283	-.00065
7.500	.41719	.00015	.03637	-.00061	-.00250	-.00095	.41082	.07259	-.00261	-.00040
15.000	.43569	-.00055	.02888	-.00007	-.00217	-.00085	.43013	.07528	-.00228	-.00045
30.000	.46699	-.00224	.01923	-.00007	-.00180	-.00030	.46028	.07853	-.00183	.00002
45.000	.48695	-.00243	.01415	.00013	-.00221	-.00032	.47604	.08147	-.00224	.00007
60.000	.50178	-.00289	.00892	.00021	-.00246	-.00017	.49465	.08423	-.00246	.00035
GRADIENT	.00484	-.00070	-.00407	.00002	.00010	.00003	.00489	.00015	.00010	.00002

CA20 747/1 01 SI ORBITER DATA (NGN143) (04 MAR 75)

REFERENCE DATA

SREF =	2690.0000 SQ.FT.	XMRP =	1109.0000 IN.XO		
LREF =	474.8100 IN.	YMRP =	.0000 IN.YO		
BREF =	936.6800 IN.	ZMRP =	375.0000 IN.ZO		
SCALE =	.0300				

PARAMETRIC DATA

ALPHAC =	4.000	BETAC =	.000
RUD-U =	15.000	RUD-L =	15.000
ELEVON =	5.000	AILRON =	.000
BETAO =	.000	PHI =	.000
DX =	.000	DY =	.000

RN/L = 3.23 GRADIENT INTERVAL = -1.00/ 4.00

ALPHAO = 14.000

DZ	CN	CA	CLM	CY	CBL	CYN	CL	CD	CSL	CLN
.000	.64464	-.00895	.07182	-.00122	-.00216	-.00013	.62765	.14727	-.00212	.00040
3.000	.64987	-.01110	.06052	-.00062	-.00197	-.00033	.63326	.14645	-.00199	.00016
7.500	.65571	-.01148	.05266	-.00044	-.00181	-.00043	.63902	.14749	-.00185	.00002
15.000	.67015	-.01225	.04105	-.00019	-.00169	-.00034	.65321	.15024	-.00172	.00008
30.000	.69127	-.01147	.03045	.00047	-.00157	-.00013	.67351	.15511	-.00155	.00025
45.000	.70536	-.01176	.02267	.00101	-.00172	-.00016	.68725	.15823	-.00170	.00026
60.000	.71990	-.01223	.01467	.00152	-.00184	-.00016	.70147	.16230	-.00183	.00029
GRADIENT	.00175	-.00072	-.00377	.00020	.00006	-.00007	.00187	-.00027	.00005	-.00008

CA20 747/1 02 SI ORBITER DATA (NGN144) (04 MAR 75)

REFERENCE DATA

SREF =	2690.0000 SQ.FT.	XMRP =	1109.0000 IN.XO		
LREF =	474.8100 IN.	YMRP =	.0000 IN.YO		
BREF =	936.6800 IN.	ZMRP =	375.0000 IN.ZO		
SCALE =	.0300				

PARAMETRIC DATA

ALPHAC =	4.000	BETAC =	.000
RUD-U =	15.000	RUD-L =	15.000
ELEVON =	5.000	AILRON =	.000
BETAO =	.000	PHI =	.000
DX =	.000	DY =	.000

RN/L = 3.35 GRADIENT INTERVAL = -1.00/ 4.00

ALPHAO = 10.000

DZ	CN	CA	CLM	CY	CBL	CYN	CL	CD	CSL	CLN
.000	.34068	.01597	.08776	-.00261	-.00311	.00017	.33273	.07489	-.00304	.00071
3.000	.34787	.01593	.08190	-.00228	-.00281	.00017	.33981	.07609	-.00274	.00065
7.500	.35779	.01626	.07760	-.00201	-.00269	.00013	.34953	.07814	-.00263	.00060
15.000	.37395	.01652	.07233	-.00165	-.00229	.00034	.36540	.08121	-.00220	.00073
30.000	.40052	.01705	.06547	-.00006	-.00209	.00032	.39148	.08535	-.00201	.00089
45.000	.41813	.01739	.06033	.00020	-.00217	.00010	.40876	.08872	-.00212	.00047
60.000	.43748	.01775	.05497	.00081	-.00222	-.00011	.42775	.09345	-.00220	.00028
GRADIENT	.00240	-.00001	-.00195	.00011	.00010	-.00000	.00235	.00040	.00010	-.00002

CA20 747/1 01 S1 ORBITER DATA (NGN145) (04 MAR 75)

REFERENCE DATA

SREF = 2690.0000 SQ.FT. XMRP = 1109.0000 IN.XO
LREF = 474.8100 IN. YMRP = .0000 IN.YO
BREF = 935.6880 IN. ZMRP = 375.0000 IN.ZO
SCALE = .0300

PARAMETRIC DATA

ALPHAC = 4.000 BETAC = .000
ELV-IB = .000 ELV-OB = 3.000
ELEVON = .000 MACH = .600
BETAO = .000 PHI = .000
DX = .000 DY = .000

RN/L = 3.37 GRADIENT INTERVAL = -1.00/ 4.00

ALPHAO = 10.000

DZ	CN	CA	CLM	CY	CBL	CYN	CL	CD	CSL	CLN
.000	.28552	.00081	.09753	-.00248	-.00193	-.00050	.28104	.05033	-.00199	-.00015
3.000	.29365	-.00145	.08457	-.00223	-.00172	-.00042	.29535	.05060	-.00177	-.00012
7.500	.31188	-.00231	.07942	-.00233	-.00161	-.00024	.30754	.05183	-.00162	.00005
15.000	.33171	-.00328	.07205	-.00213	-.00132	.00001	.32724	.05438	-.00130	.00024
30.000	.36017	-.00407	.06427	-.00132	-.00113	.00025	.35540	.05854	-.00107	.00045
45.000	.38346	-.00563	.05399	-.00115	-.00155	.00013	.37861	.06104	-.00150	.00039
60.000	.40771	-.00693	.04454	-.00075	-.00186	.00006	.40272	.06397	-.00182	.00038
GRADIENT	.00471	-.00075	-.00432	.00009	.00007	.00002	.00477	.00007	.00007	.00001

RN/L = 3.36 GRADIENT INTERVAL = -1.00/ 4.00

ALPHAO = 14.000

DZ	CN	CA	CLM	CY	CBL	CYN	CL	CD	CSL	CLN
.000	.53444	-.01237	.12579	-.00220	-.00285	-.00009	.52156	.11729	-.00201	.00040
3.000	.54716	-.01674	.10553	-.00174	-.00181	-.00020	.53495	.11613	-.00181	.00024
7.500	.55525	-.01797	.09525	-.00140	-.00162	-.00014	.54311	.11689	-.00161	.00026
15.000	.55959	-.01847	.08437	-.00104	-.00149	-.00007	.55714	.11987	-.00147	.00029
30.000	.59249	-.01813	.07247	.00019	-.00143	-.00019	.57927	.12574	-.00143	.00016
45.000	.60472	-.01763	.06574	-.00001	-.00123	.00010	.59102	.12919	-.00117	.00039
60.000	.61693	-.01718	.06118	-.00021	-.00102	.00041	.60288	.13267	-.00089	.00065
GRADIENT	.00424	-.00146	-.00675	.00015	.00008	-.00004	.00447	-.00039	.00007	-.00005

ORIGINAL PAGE IS
OF POOR QUALITY

CA20 7471 01 51 ORBITER DATA (NGN146) (04 MAR 75)

REFERENCE DATA

SREF = 2690.0000 SQ.FT. XMRP = 1109.0000 IN.XO
LREF = 474.8100 IN. YMRP = .0000 IN.YO
BREF = 936.6900 IN. ZMRP = 375.0000 IN.ZO
SCALE = .0300

PARAMETRIC DATA

ALPHAC =	4.000	BETAC =	.000
ELV-IB =	.000	ELV-OB =	3.000
ELEVON =	10.000	MACH =	.600
BETAO =	.000	PHI =	.000
DX =	.000	DY =	.000

RN/L = 3.33 GRADIENT INTERVAL = -1.00/ 4.00

ALPHAO = 10.000

DZ	CN	CA	CLM	CY	CBL	CYN	CL	CD	CSL	CLN
.000	.49389	.01076	.00865	-.00173	-.00199	-.00102	.48452	.09536	-.00213	-.00065
3.000	.50950	.00820	-.00347	-.00167	-.00174	-.00091	.50034	.09555	-.00189	-.00060
7.500	.52357	.00748	-.01030	-.00117	-.00145	-.00090	.51431	.09829	-.00159	-.00064
15.000	.54348	.00733	-.01717	-.00140	-.00127	-.00043	.53396	.10159	-.00133	-.00020
30.000	.57392	.00572	-.02570	-.00056	-.00104	-.00014	.55421	.10529	-.00105	.00005
45.000	.59068	.00579	-.03101	-.00009	-.00148	-.00038	.58070	.10827	-.00152	-.00012
60.000	.60959	.00561	-.03682	.00050	-.00176	-.00054	.59935	.11138	-.00182	-.00023
GRADIENT	.00520	-.00085	-.00404	.00002	.00008	.00004	.00527	.00006	.00009	.00002

RN/L = 3.27 GRADIENT INTERVAL = -1.00/ 4.00

ALPHAO = 14.000

DZ	CN	CA	CLM	CY	CBL	CYN	CL	CD	CSL	CLN
.000	.74511	.00051	.03228	-.00005	-.00333	-.00125	.72286	.18075	-.00353	-.00041
3.000	.75450	-.00249	.01685	.00086	-.00302	-.00159	.73269	.18011	-.00331	-.00031
7.500	.76203	-.00311	.00703	.00169	-.00313	-.00183	.74015	.18134	-.00348	-.00102
15.000	.77378	-.00237	-.00241	.00209	-.00337	-.00191	.75137	.18490	-.00373	-.00104
30.000	.79302	.00047	-.01431	.00192	-.00271	-.00094	.76935	.19230	-.00285	-.00036
45.000	.80612	.00052	-.02055	.00223	-.00312	-.00083	.78205	.19552	-.00324	-.00010
60.000	.81950	.00035	-.02677	.00259	-.00355	-.00086	.78507	.19360	-.00365	.00003
GRADIENT	.00313	-.00100	-.00514	.00030	.00010	-.00011	.00328	-.00021	.00007	-.00013

CA20 747/1 01 S1 ORBITER DATA (NGN147) (04 MAR 75)

REFERENCE DATA

SREF =	2690.0000 SQ.FT.	XMRP =	1109.0000 IN.XO
LREF =	474.8100 IN.	YMRP =	.0000 IN.YO
BREF =	936.6800 IN.	ZMRP =	375.0000 IN.ZO
SCALE =	.0300		

PARAMETRIC DATA

ALPHAC =	4.000	BETAC =	.000
ELV-IB =	.000	ELV-OB =	3.000
ELEVON =	10.000	MACH =	.300
BETAO =	.000	PHI =	.000
DX =	.000	DY =	.000

RN/L = 1.89 GRADIENT INTERVAL = -1.00/ 4.00

ALPHAO = 10.000

DZ	CN	CA	CLM	CY	CBL	CYN	CL	CD	CSL	CLN
.000	.50523	.00251	-.00877	-.00084	-.00235	-.00122	.49712	.09021	-.00252	-.00080
3.000	.51564	.00122	-.01573	-.00072	-.00218	-.00117	.50759	.09075	-.00235	-.00077
7.500	.52513	.00148	-.01732	-.00076	-.00209	-.00097	.51690	.09265	-.00223	-.00060
15.000	.54517	.00094	-.02592	-.00021	-.00194	-.00063	.53573	.09559	-.00202	-.00023
30.000	.57021	.00015	-.03130	.00045	-.00181	-.00020	.56152	.09917	-.00181	.00011
45.000	.58269	.00043	-.03463	.00151	-.00212	-.00055	.57386	.10164	-.00218	-.00017
60.000	.58545	.00040	-.03778	.00240	-.00230	-.00065	.58029	.10432	-.00239	-.00025
GRADIENT	.00347	-.00043	-.00232	.00004	.00005	.00002	.00349	.00018	.00005	.00001

CA20 747/1 01 S1 ORBITER DATA (NGN148) (04 MAR 75)

REFERENCE DATA

SREF =	2690.0000 SQ.FT.	XMRP =	1109.0000 IN.XO
LREF =	474.8100 IN.	YMRP =	.0000 IN.YO
BREF =	936.6800 IN.	ZMRP =	375.0000 IN.ZO
SCALE =	.0300		

PARAMETRIC DATA

ALPHAC =	4.000	BETAC =	.000
ELV-IB =	.000	ELV-OB =	3.000
ELEVON =	10.000	MACH =	.700
BETAO =	.000	PHI =	.000
DX =	.000	DY =	.000

RN/L = 3.54 GRADIENT INTERVAL = -1.00/ 4.00

ALPHAO = 10.000

DZ	CN	CA	CLM	CY	CBL	CYN	CL	CD	CSL	CLN
.000	.55626	.03060	.01692	-.00048	-.00230	-.00064	.54249	.12673	-.00237	-.00034
3.000	.57014	.02647	.00414	-.00011	-.00220	-.00060	.55554	.12704	-.00237	-.00019
7.500	.58362	.02810	-.00382	.00013	-.00200	-.00055	.56987	.12901	-.00206	-.00020
15.000	.59965	.02854	-.01079	-.00018	-.00126	-.00028	.58557	.13233	-.00129	-.00005
30.000	.62301	.02971	-.01897	-.00038	.00023	.00026	.60938	.13744	.00027	.00022
45.000	.64196	.03028	-.02572	.00006	-.00033	.00014	.62684	.14130	-.00031	.00019
60.000	.65138	.03093	-.03254	.00041	-.00054	.00013	.64596	.14531	-.00051	.00022
GRADIENT	.00463	-.00071	-.00426	.00012	-.00001	.00002	.00469	.00010	.00000	.00002

CA20 747/1 01 S1 ORBITER DATA (NGN149) (04 MAR 75)

REFERENCE DATA

SREF = 2690.0000 SQ.FT. XMRP = 1109.0000 IN.XO
LREF = 474.8100 IN. YMRP = .0000 IN.YO
BREF = 936.6800 IN. ZMRP = 375.0000 IN.ZO
SCALE = .0300

PARAMETRIC DATA

ALPHAC =	4.000	BETAC =	.000
RUD-U =	.000	RUD-L =	.000
ELEVON =	5.000	AILRON =	-10.000
BETAD =	.000	PHI =	.000
DX =	.000	DY =	.000

RN/L = 3.34 GRADIENT INTERVAL = -1.00/ 4.00

ALPHAD = 10.000

DZ	CN	CA	CLM	CY	CBL	CYN	CL	CD	CSL	CLN
.000	.40209	.00508	.04372	.04372	-.05367	-.00839	.39510	.07483	-.05431	.00106
3.000	.41736	.00300	.03113	.04388	-.05295	-.00796	.41049	.07543	-.05353	.00135
7.500	.43132	.00179	.02459	.04400	-.05265	-.00750	.42446	.07666	-.05315	.00176
15.000	.45401	.00074	.01496	.04464	-.05217	-.00707	.44698	.07856	-.05261	.00210
30.000	.48408	-.00084	.00497	.04615	-.05160	-.00637	.47674	.08402	-.05192	.00269
45.000	.50356	.00000	-.00186	.04705	-.05175	-.00660	.49591	.08745	-.05211	.00248
60.000	.52484	-.00003	-.00885	.04816	-.05174	-.00663	.51687	.09111	-.05210	.00246
GRADIENT	.00509	-.00069	-.00419	.00005	.00024	.00014	.00513	.00020	.00026	.00010

RN/L = 3.29 GRADIENT INTERVAL = -1.00/ 4.00

ALPHAD = 14.000

DZ	CN	CA	CLM	CY	CBL	CYN	CL	CD	CSL	CLN
.000	.66138	-.00670	.05844	.04035	-.04996	-.00525	.64336	.15350	-.04974	.00599
3.000	.65958	-.00929	.05329	.04246	-.04886	-.00604	.64224	.15055	-.04887	.00595
7.500	.66527	-.01011	.04587	.04308	-.04796	-.00605	.64796	.15114	-.04800	.00573
15.000	.68636	-.01142	.02796	.04351	-.04724	-.00537	.66873	.15497	-.04713	.00622
30.000	.70977	-.01051	.01493	.04535	-.04681	-.00525	.69123	.16151	-.04668	.00623
45.000	.72353	-.01028	.00690	.04583	-.04692	-.00522	.70452	.16507	-.04679	.00629
60.000	.73755	-.01009	-.00119	.04633	-.04702	-.00516	.71809	.16864	-.04687	.00637
GRADIENT	-.00060	-.00086	-.00171	.00070	.00037	-.00026	-.00037	-.00098	.00029	-.00034

CA20 (747/1 01 SI AT38 AT39) - (747/1 01 SI) (UGN045) (25 NOV 75)

REFERENCE DATA

SREF = 5500.0000 SQ.FT. XMRP = 1339.9000 IN.XC
LREF = 327.7800 IN. YMRP = .0000 IN.YC
BREF = 2348.0400 IN. ZMRP = 190.8000 IN.ZC
SCALE = .0300

PARAMETRIC DATA

ALPHAC =	.000	BETAC =	.000
ELV-IB =	.000	ELV-OB =	3.000
ELEVON =	5.000	MACH =	.600
PHI =	.000	DX =	.000
DY =	.000	BETAO =	.000

RN/L = 3.23 GRADIENT INTERVAL = -1.00/ 4.00

ALPHAO = 8.000

DZ	DCN	DCA	DCLM	DCY	DCBL	DCYN	DCL	DCD	DCSL	DCLN
.000	-.01373	.00749	.01441	.00020	-.00028	-.00019	-.01399	.00700	-.00029	-.00018
3.000	-.00968	.00765	.00778	-.00007	-.00010	-.00013	-.00993	.00731	-.00010	-.00013
7.500	-.00930	.00775	.01507	-.00165	-.00000	.00055	-.00956	.00742	.00002	.00055
15.000	-.01572	.00808	.02492	-.00060	-.00004	.00015	-.01597	.00751	-.00004	.00015
30.000	-.01665	.00837	.02845	-.00091	.00030	.00007	-.01688	.00773	.00030	.00006
45.000	-.02111	.01009	.03726	-.00114	.00082	.00080	-.02138	.00927	.00064	.00078
60.000	-.01337	.02021	.01275	.00147	.00214	.00664	-.01395	.01952	.00237	.00655
GRADIENT	.00135	.00005	-.00221	-.00009	.00006	.00002	.00135	.00010	.00006	.00002

CA20 (747/1 01 SI AT38 AT39) - (747/1 01 SI) (UGN046) (25 NOV 75)

REFERENCE DATA

SREF = 5500.0000 SQ.FT. XMRP = 1339.9000 IN.XC
LREF = 327.7800 IN. YMRP = .0000 IN.YC
BREF = 2348.0400 IN. ZMRP = 190.8000 IN.ZC
SCALE = .0300

PARAMETRIC DATA

ALPHAC =	4.000	BETAC =	.000
ELV-IB =	.000	ELV-OB =	3.000
ELEVON =	5.000	MACH =	.600
PHI =	.000	DX =	.000
DY =	.000	BETAO =	.000

RN/L = 3.33 GRADIENT INTERVAL = -1.00/ 4.00

ALPHAO = 12.000

DZ	DCN	DCA	DCLM	DCY	DCBL	DCYN	DCL	DCD	DCSL	DCLN
.000	-.03599	.00814	.02724	.00044	-.00017	.00032	-.03648	.00379	-.00013	.00034
3.000	-.03814	.00862	.04238	.00084	-.00004	.00007	-.03855	.00401	-.00003	.00007
7.500	-.03769	.00956	.04446	.00076	.00003	-.00012	-.03829	.00493	.00001	-.00012
15.000	-.03732	.01076	.04236	-.00009	-.00002	.00018	-.03803	.00603	-.00001	.00019
30.000	-.03387	.01118	.03783	.00075	-.00004	.00005	-.03460	.00662	-.00004	.00005
45.000	-.02951	.01118	.03254	.00084	.00007	-.00015	-.03024	.00659	.00005	-.00015
60.000	-.03326	.01195	.02806	.00117	.00018	-.00018	-.03404	.00719	.00016	-.00020
GRADIENT	-.00072	.00016	.00505	.00013	.00004	-.00009	-.00073	.00007	.00003	-.00009

ORIGINAL PAGE IS
OF POOR QUALITY

CA20 (747/1 01 S1 AT38 AT39) - (747/1 01 S1) (UGN047) (25 NOV 75)

REFERENCE DATA

SREF =	5500.0000 SQ.FT.	XMRP =	1339.9000 IN.XC
LREF =	327.7800 IN.	YMRP =	.0000 IN.YC
BREF =	2348.0400 IN.	ZMRP =	190.8000 IN.ZC
SCALE =	.0300		

PARAMETRIC DATA

ALPHAC =	8.000	BETAC =	.000
ELV-IB =	.000	ELV-OB =	3.000
ELEVON =	5.000	MACH =	.600
PHI =	.000	DX =	.000
DY =	.000	BETAO =	.000

RN/L = 3.25 GRADIENT INTERVAL = -1.00/ 4.00

ALPHAO = 16.000

DZ	DCN	DCA	DCLM	DCY	DCBL	DCYN	DCL	DCD	DCSL	DCLN
.000	-.06332	.00934	.00382	.00065	-.00028	.00023	-.06351	-.00410	-.00023	.00028
3.000	-.05888	.00932	.00561	.00169	-.00023	-.00002	-.05911	-.00346	-.00023	.00002
7.500	-.06379	.01227	.02896	.00235	-.00014	-.00115	-.06442	-.00154	-.00034	-.00111
15.000	-.06515	.01334	.03593	.00229	-.00000	-.00113	-.06591	-.00096	-.00021	-.00111
30.000	-.05730	.01353	.02972	.00154	-.00006	-.00076	-.05815	.00029	-.00021	-.00074
45.000	-.05158	.01284	.01648	.00078	-.00036	-.00059	-.05233	.00018	-.00047	-.00051
60.000	-.05251	.01278	.00495	.00171	-.00037	-.00089	-.05321	-.00024	-.00053	-.00082
GRADIENT	.00148	-.00001	.00059	.00035	.00002	-.00008	.00146	.00022	.00000	-.00009

CA20 747/1 01 S1 AT38 AT39 DELTA BETA=(-5)-(0) (UGN048) (25 NOV 75)

REFERENCE DATA

SREF =	5500.0000 SQ.FT.	XMRP =	1339.9000 IN.XC
LREF =	327.7800 IN.	YMRP =	.0000 IN.YC
BREF =	2348.0400 IN.	ZMRP =	190.8000 IN.ZC
SCALE =	.0300		

PARAMETRIC DATA

ALPHAC =	4.000	BETAC =	-5.000
ELV-IB =	.000	ELV-OB =	3.000
ELEVON =	5.000	MACH =	.600
PHI =	.000	DX =	.000
DY =	.000	BETAO =	-5.000

RN/L = 3.34 GRADIENT INTERVAL = -1.00/ 4.00

ALPHAO = 12.000

DZ	DCN	DCA	DCLM	DCY	DCBL	DCYN	DCL	DCD	DCSL	DCLN
.000	-.00253	-.00216	-.00367	.10235	.01233	-.01227	-.00228	-.00245	.01101	-.01347
3.000	.01028	-.00360	-.03163	.11144	.01453	-.01984	.01062	-.00259	.01242	-.02122
7.500	.01345	-.00427	-.03886	.10860	.01539	-.02081	.01384	-.00295	.01317	-.02227
15.000	.00949	-.00491	-.03096	.10541	.01570	-.02027	.00997	-.00401	.01355	-.02177
30.000	.00398	-.00502	-.01939	.10111	.01570	-.01905	.00449	-.00468	.01367	-.02056
45.000	-.00033	-.00516	-.01278	.10406	.01649	-.02099	.00022	-.00523	.01427	-.02256
60.000	-.00125	-.00584	-.00533	.10387	.01675	-.02133	-.00062	-.00603	.01450	-.02292
GRADIENT	.00427	-.00048	-.00932	.00303	.00073	-.00252	.00430	-.00005	.00047	-.00258

CA20 (747/1 01 SI) - (747/1) D/S (049 - 035) (UGN049) (25 NOV 75)

REFERENCE DATA

SREF =	5500.0000 SQ.FT.	XMRP =	1339.9000 IN.XC		
LREF =	327.7800 IN.	YMRP =	.0000 IN.YC		
BREF =	2348.0400 IN.	ZMRP =	190.8000 IN.ZC		
SCALE =	.0300				

PARAMETRIC DATA

ALPHAC =	.000	BETAC =	.000
ELV-IB =	.000	ELV-OB =	3.000
ELEVON =	5.000	MACH =	.600
PHI =	.000	DX =	.000
DY =	.000	BETAO =	.000

RN/L = 3.24 GRADIENT INTERVAL = .00/ 12.00

ALPHAO = 6.000

DZ	DCN	DCA	DCLM	DCY	DCBL	DCYN	DCL	DCD	DCSL	DCLN
.000	-.10303	.00511	.10252	.00122	.00096	-.00161	-.10914	.00130	.00090	-.00164
3.000	-.10818	.00530	.11021	.00154	.00089	-.00146	-.10930	.00152	.00084	-.00149
7.500	-.09892	.00508	.09731	.00087	.00068	-.00095	-.09903	.00163	.00064	-.00097
15.000	-.08291	.00516	.07030	-.00052	.00045	-.00022	-.08304	.00226	.00044	-.00022
30.000	-.05673	.00440	.03463	-.00076	.00004	.00037	-.05685	.00242	.00005	.00007
45.000	-.02918	.00080	-.00341	-.00377	-.00153	.00024	-.02919	-.00022	-.00153	.00029
60.000	.00650	-.02975	-.00735	-.02235	-.00748	-.00863	.00753	-.02150	-.00778	-.00837
GRADIENT	.00140	-.00001	-.00087	-.00006	-.00004	.00009	.00140	.00004	-.00003	.00009

RN/L = 3.31 GRADIENT INTERVAL = .00/ 12.00

ALPHAO = 10.000

DZ	DCN	DCA	DCLM	DCY	DCBL	DCYN	DCL	DCD	DCSL	DCLN
.000	-.19853	-.00140	.27222	.00063	.00098	-.00177	-.19836	-.00833	.00092	-.00180
3.000	-.18820	-.00030	.25454	.00058	.00093	-.00156	-.18808	-.00697	.00088	-.00160
7.500	-.17365	.00031	.23197	.00108	.00062	-.00136	-.17355	-.00575	.00058	-.00138
15.000	-.13876	.00261	.16819	-.00039	.00060	-.00039	-.13877	-.00224	.00058	-.00041
30.000	-.09808	.00386	.09765	-.00125	.00001	.00022	-.09815	.00044	.00002	.00022
45.000	-.07047	.00314	.06432	-.00090	.00003	.00013	-.07054	.00068	.00004	.00012
60.000	-.03917	.00099	.04221	.00116	.00062	-.00090	-.03918	-.00038	.00059	-.00092
GRADIENT	.00331	.00022	-.00534	.00006	-.00005	.00005	.00330	.00034	-.00005	.00005

RN/L = 3.27 GRADIENT INTERVAL = .00/ 12.00

ALPHAO = 14.000

DZ	DCN	DCA	DCLM	DCY	DCBL	DCYN	DCL	DCD	DCSL	DCLN
.000	-.26580	-.00262	.33033	.00209	.00055	-.00257	-.26555	-.01193	.00046	-.00258
3.000	-.25996	-.00195	.33027	.00227	.00061	-.00241	-.25973	-.01103	.00052	-.00243
7.500	-.24879	-.00124	.32755	.00175	.00054	-.00179	-.24850	-.00992	.00048	-.00181
15.000	-.21460	.00050	.27677	.00152	.00050	-.00138	-.21449	-.00699	.00045	-.00140
30.000	-.14928	.00222	.16590	-.00048	.00026	-.00012	-.14929	-.00239	.00025	-.00013
45.000	-.10962	.00352	.10861	-.00150	-.00002	.00057	-.10969	-.00021	-.00000	.00057
60.000	-.06597	.00377	.07928	-.00273	-.00040	.00150	-.06595	.00077	-.00035	.00152
GRADIENT	.00241	.00018	-.00039	-.00005	-.00000	.00011	.00240	.00027	.00000	.00011

CA20 (747/1 01 S1) - (747/1) D/S (050 - 035) (UGN050) (25 NOV 75)

REFERENCE DATA

SREF =	5500.0000 SQ.FT.	XMRP =	1339.9000 IN.XC		
LREF =	327.7800 IN.	YMRP =	.0000 IN.YC		
BREF =	2348.0400 IN.	ZMRP =	190.8000 IN.ZC		
SCALE =	.0300				

PARAMETRIC DATA

ALPHAC =	.000	BETAC =	.000
ELV-IB =	.000	ELV-OB =	3.000
ELEVON =	5.000	MACH =	.600
PHI =	.000	DX =	10.000
DY =	.000	BETAO =	.000

RN/L = 3.25 GRADIENT INTERVAL = .00/ 12.00

ALPHAO = 6.000

DZ	DCN	DCA	DCLM	DCY	DCBL	DCYN	DCL	DCD	DCSL	DCLN
.000	-.09580	.00390	.08262	.00160	.00084	-.00180	-.09588	.00056	.00078	-.00183
3.000	-.09491	.00422	.08552	.00212	.00077	-.00170	-.09500	.00090	.00071	-.00173
7.500	-.08872	.00441	.07700	.00022	.00052	-.00068	-.08882	.00131	.00049	-.00069
15.000	-.07461	.00486	.05463	.00031	.00062	-.00049	-.07473	.00267	.00060	-.00051
30.000	-.05643	.00369	.03126	-.00092	.00025	.00014	-.05653	.00171	.00025	.00013
45.000	-.07426	.00458	-.00462	-.03330	-.01074	.01272	-.07437	.00198	-.01028	.01308
60.000	-.23231	.01018	-.02499	-.18177	-.05949	.06783	-.23253	.00207	-.05609	.06983
GRADIENT	.00[illegible]	.00007	-.00084	-.00020	-.00004	.00016	.00097	.00010	-.00004	.00016

RN/L = 3.25 GRADIENT INTERVAL = .00/ 12.00

ALPHAO = 10.000

DZ	DCN	DCA	DCLM	DCY	DCBL	DCYN	DCL	DCD	DCSL	DCLN
.000	-.16516	-.00346	.23900	.00289	.00113	-.00258	-.16494	-.00823	.00104	-.00262
3.000	-.16232	-.00187	.23658	.00252	.00091	-.00223	-.16216	-.00753	.00083	-.00226
7.500	-.15348	-.00004	.21927	.00139	.00068	-.00144	-.15338	-.00539	.00063	-.00146
15.000	-.12732	.00223	.15917	.00034	.00066	-.00049	-.12732	-.00221	.00064	-.00052
30.000	-.09244	.00318	.09459	-.00068	.00028	.00028	-.09249	-.00005	.00029	.00027
45.000	-.07371	.00297	.06372	-.00344	-.00057	.00125	-.07376	.00040	-.00052	.00127
60.000	-.06336	.00279	.03595	-.01113	-.00321	.00420	-.06342	.00058	-.00306	.00431
GRADIENT	.00159	.00045	-.00273	-.00020	-.00006	.00016	.00157	.00051	-.00005	.00016

RN/L = 3.23 GRADIENT INTERVAL = .00/ 12.00

ALPHAO = 14.000

DZ	DCN	DCA	DCLM	DCY	DCBL	DCYN	DCL	DCD	DCSL	DCLN
.000	-.23318	-.00762	.36046	.00516	.00141	-.00331	-.23278	-.01576	.00129	-.00335
3.000	-.22511	-.00629	.34118	.00374	.00116	-.00261	-.22475	-.01414	.00107	-.00265
7.500	-.21868	-.00317	.32606	.00385	.00109	-.00256	-.21844	-.01080	.00100	-.00260
15.000	-.18895	-.00218	.26435	.00159	.00082	-.00111	-.18876	-.00877	.00079	-.00114
30.000	-.13578	.00265	.16077	.00107	.00051	-.00052	-.13579	-.00209	.00050	-.00054
45.000	-.10272	.00246	.10974	.00030	.00059	.00007	-.10274	-.00112	.00050	.00005
60.000	-.07656	.00246	.07850	.00399	.00195	-.00128	-.07660	-.00021	.00190	-.00135
GRADIENT	.00189	.00060	-.00449	-.00016	-.00004	.00009	.00187	.00067	-.00004	.00009

CA20 (747/1 01 S1) - (747/1) D/S (051 - 035) (UGN051) (25 NOV 75)

REFERENCE DATA

SREF =	5500.0000 SQ.FT.	XMRP =	1339.9000 IN.XC		
LREF =	327.7800 IN.	YMRP =	.0000 IN.YC		
BREF =	2348.0400 IN.	ZMRP =	190.8000 IN.ZC		
SCALE =	.0300				

PARAMETRIC DATA

ALPHAC =	.000	BETAC =	.000
ELV-IB =	.000	ELV-OB =	3.000
ELEVON =	5.000	MACH =	.600
PHI =	.000	DX =	20.000
DY =	.000	BETAO =	.000

RN/L = 3.24 GRADIENT INTERVAL = .00/ 12.00

ALPHAO = 6.000

DZ	DCN	DCA	DCLM	DCY	DCBL	DCYN	DCL	DCD	DCSL	DCLN
.000	-.08624	.00189	.06510	.00127	.00042	-.00135	-.08626	-.00112	.00037	-.00136
3.000	-.08179	.00263	.05305	.00270	.00072	-.00162	-.08183	-.00023	.00066	-.00165
7.500	-.07584	.00305	.04491	.00222	.00068	-.00138	-.07590	.00041	.00063	-.00140
15.000	-.06632	.00369	.03285	.00075	.00052	-.00079	-.06641	.00137	.00050	-.00081
30.000	-.05402	.00321	.02328	-.00074	-.00011	-.00007	-.05410	.00132	-.00011	-.00007
45.000	-.01739	.01057	-.07025	.00321	.00211	-.00061	-.01775	.01006	.00209	-.00069
60.000	.05403	.04106	-.40248	.02254	.01244	-.00428	.05254	.04397	.01228	-.00471
GRADIENT	.00138	.00015	-.00262	.00011	.00003	.00000	.00138	.00020	.00003	.00000

RN/L = 3.25 GRADIENT INTERVAL = .00/ 12.00

ALPHAO = 10.000

DZ	DCN	DCA	DCLM	DCY	DCBL	DCYN	DCL	DCD	DCSL	DCLN
.000	-.14406	-.00225	.21759	.00701	.00094	-.00291	-.14389	-.00739	.00084	-.00294
3.000	-.14163	-.00219	.21532	.00369	.00097	-.00217	-.14151	-.00713	.00079	-.00220
7.500	-.13272	-.00094	.19397	.00176	.00072	-.00150	-.13261	-.00557	.00067	-.00153
15.000	-.11234	.00137	.14219	.00165	.00053	-.00103	-.11232	-.00255	.00050	-.00105
30.000	-.08364	.00227	.08790	-.00059	.00022	.00025	-.08387	-.00065	.00023	.00024
45.000	-.06737	.00273	.05864	-.00121	-.00001	.00050	-.06742	.00037	.00000	.00050
60.000	-.05193	.00435	.02053	-.00276	-.00052	.00123	-.05205	.00254	-.00048	.00125
GRADIENT	.00155	.00020	-.00327	-.00069	-.00003	.00018	.00154	.00025	-.00002	.00019

RN/L = 3.28 GRADIENT INTERVAL = .00/ 12.00

ALPHAO = 14.000

DZ	DCN	DCA	DCLM	DCY	DCBL	DCYN	DCL	DCD	DCSL	DCLN
.000	-.19219	.00518	.25187	-.00558	-.00104	.00086	-.19225	-.00153	-.00101	.00089
3.000	-.19528	-.00254	.30325	.00054	.00026	-.00110	-.19507	-.00935	.00022	-.00111
7.500	-.18974	-.00579	.31510	.00451	.00103	-.00235	-.18943	-.01241	.00035	-.00239
15.000	-.16314	-.00219	.24498	.00228	.00072	-.00160	-.16297	-.00788	.00057	-.00163
30.000	-.12073	.00112	.15404	.00087	.00038	-.00038	-.12070	-.00309	.00037	-.00040
45.000	-.09557	.00161	.10649	-.00002	.00023	.00012	-.09557	-.00173	.00023	.00012
60.000	-.07549	.00085	.09009	.00016	.00017	.00002	-.07548	-.00182	.00017	.00002
GRADIENT	.00040	-.00140	.00797	.00131	.00027	-.00042	.00045	-.00139	.00025	-.00043

CA20 (747/1 01 S1) - (747/1) O/S (052 - 035) (UGN052) (25 NOV 75)

REFERENCE DATA

SREF = 5500.0000 SQ.FT. XMRP = 1339.9000 IN.XC
LREF = 327.7800 IN. YMRP = .0000 IN.YC
BREF = 2348.0400 IN. ZMRP = 190.8000 IN.ZC
SCALE = .0300

PARAMETRIC DATA

ALPHAC = 4.000 BETAC = .000
ELV-IB = .000 ELV-OB = 3.000
ELEVON = 5.000 MACH = .600
PHI = .000 DX = .000
DY = .000 BETAO = .000

RN/L = 3.22 GRADIENT INTERVAL = .00/ 12.00

ALPHAO = 6.000

DZ	DCN	DCA	DCLM	DCY	DCBL	DCYN	DCL	DCD	DCSL	DCLN
.000	-.08970	.01542	.02440	.00141	.00095	-.00125	-.09082	.00596	.00082	-.00135
3.000	-.08596	.01449	.02762	.00116	.00080	-.00084	-.08701	.00542	.00071	-.00092
7.500	-.07905	.01348	.02611	.00070	.00065	-.00035	-.08003	.00514	.00061	-.00042
15.000	-.06972	.01224	.02177	.00009	.00039	.00029	-.07062	.00489	.00042	.00025
30.000	-.05139	.00910	.02154	-.00054	.00038	.00053	-.05206	.00368	.00043	.00048
45.000	-.03229	.00672	.01605	-.00169	.00018	.00169	-.03281	.00331	.00035	.00167
60.000	-.00953	.00883	-.06112	-.00347	-.00334	.00690	-.01040	.00778	-.00260	.00721
GRADIENT	.00143	-.00026	.00018	-.00010	-.00004	.00012	.00145	-.00010	-.00003	.00012

RN/L = 3.24 GRADIENT INTERVAL = .00/ 12.00

ALPHAO = 10.000

DZ	DCN	DCA	DCLM	DCY	DCBL	DCYN	DCL	DCD	DCSL	DCLN
.000	-.17154	.01401	.15546	.00391	.00126	-.00257	-.17207	-.00399	.00099	-.00269
3.000	-.16028	.01375	.14012	.00327	.00108	-.00198	-.16084	-.00308	.00085	-.00209
7.500	-.14486	.01339	.11980	.00237	.00083	-.00119	-.14547	-.00184	.00070	-.00127
15.000	-.12223	.01250	.08871	.00171	.00065	-.00062	-.12287	-.00034	.00059	-.00069
30.000	-.09136	.01048	.05880	.00044	.00031	.00003	-.09195	.00087	.00031	-.00001
45.000	-.07103	.00883	.04088	.00012	.00004	.00036	-.07156	.00136	.00008	.00035
60.000	-.05020	.00747	.01666	-.00033	-.00079	.00107	-.05071	.00218	-.00067	.00114
GRADIENT	.00355	-.00009	-.00474	-.00020	-.00006	.00018	.00354	.00029	-.00004	.00019

RN/L = 3.24 GRADIENT INTERVAL = .00/ 12.00

ALPHAO = 14.000

DZ	DCN	DCA	DCLM	DCY	DCBL	DCYN	DCL	DCD	DCSL	DCLN
000	-.25112	.01144	.25990	.00403	.00150	-.00294	-.25094	-.01487	.00118	-.00308
3.000	-.24121	.01143	.24884	.00264	.00109	-.00197	-.24109	-.01395	.00089	-.00207
7.500	-.22302	.01240	.22528	.00203	.00084	-.00128	-.22309	-.01098	.00071	-.00136
15.000	-.19643	.01369	.16963	.00186	.00073	-.00098	-.19683	-.00588	.00062	-.00105
30.000	-.13616	.01230	.10742	.00017	.00019	.00016	-.13670	-.00200	.00021	.00014
45.000	-.10509	.01022	.07761	.00023	.00026	.00019	-.10559	-.00082	.00028	.00016
60.000	-.08394	.00842	.06503	.00021	.00063	.00001	-.08436	-.00040	.00063	-.00006
GRADIENT	.00377	.00013	-.00467	-.00026	-.00008	.00022	.00374	.00053	-.00006	.00022

CA20 (747/1 01 S1) - (747/1) D/S (053 - 035) (UGN053) (25 NOV 75)

REFERENCE DATA

SREF =	6500.0000 SQ.FT.	XMRP =	1339.9000 IN.XC		
LREF =	327.7800 IN.	YMRP =	.0000 IN.YC		
BREF =	2348.0400 IN.	ZMRP =	190.8000 IN.ZC		
SCALE =	.0300				

PARAMETRIC DATA

ALPHAC =	4.000	BETAC =	.000
ELV-IB =	.000	ELV-OB =	3.000
ELEVON =	5.000	MACH =	.600
PHI =	.000	DX =	10.000
DY =	.000	BETAO =	.000

RN/L = 3.27 GRADIENT INTERVAL = .00/ 12.00

ALPHAO = 6.000

DZ	DCN	DCA	DCLM	DCY	DCBL	DCYN	DCL	DCD	DCSL	DCLN
.000	-.08001	.01346	.00849	.00244	.00075	-.00155	-.08098	.00503	.00059	-.00162
3.000	-.07803	.01302	.01386	.00178	.00069	-.00098	-.07896	.00479	.00059	-.00104
7.500	-.07334	.01235	.01419	.00107	.00055	-.00045	-.07422	.00461	.00050	-.00050
15.000	-.06492	.01117	.01140	.00080	.00037	-.00021	-.06574	.00432	.00035	-.00024
30.000	-.04807	.00893	.00555	.00057	.00005	.00009	-.04874	.00386	.00007	.00009
45.000	-.02609	.01019	-.08444	.00195	-.00427	.00228	-.02700	.00741	-.00401	.00272
60.000	.00807	.01883	-.35415	.00876	-.01657	.00789	.00606	.01957	-.01555	.00957
GRADIENT	.00090	-.00015	.00071	-.00018	-.00003	.00014	.00091	-.00005	-.00001	.00015

RN/L = 3.23 GRADIENT INTERVAL = .00/ 12.00

ALPHAO = 10.000

DZ	DCN	DCA	DCLM	DCY	DCBL	DCYN	DCL	DCD	DCSL	DCLN
.000	-.14038	.01104	.13119	.00138	.00097	-.00179	-.14128	-.00375	.00078	-.00183
3.000	-.13873	.01151	.13356	.00051	.00073	-.00104	-.13918	-.00306	.00062	-.00111
7.500	-.12703	.01147	.11038	-.00054	.00043	-.00014	-.12753	-.00187	.00041	-.00019
15.000	-.10914	.01109	.08409	-.00089	.00011	.00034	-.10970	-.00039	.00014	.00033
30.000	-.08285	.00928	.05434	-.00155	.00001	.00068	-.08337	.00057	.00008	.00068
45.000	-.06526	.00810	.03503	-.00110	-.00033	.00080	-.06575	.00123	-.00024	.00093
60.000	-.04955	.00752	.00764	-.00095	-.00120	.00114	-.05006	.00230	-.00107	.00125
GRADIENT	.00191	.00005	-.00288	-.00025	-.00007	.00022	.00189	.00025	-.00005	.00022

RN/L = 3.23 GRADIENT INTERVAL = .00/ 12.00

ALPHAO = 14.000

DZ	DCN	DCA	DCLM	DCY	DCBL	DCYN	DCL	DCD	DCSL	DCLN
.000	-.20334	.00537	.26671	.00252	.00141	-.00272	-.20931	-.01610	.00112	-.00205
3.000	-.20723	.00597	.26522	.00059	.00089	-.00148	-.20882	-.01473	.00073	-.00157
7.500	-.19331	.00599	.23518	.00002	.00057	-.00056	-.19319	-.01126	.00051	-.00082
15.000	-.16355	.01072	.17305	-.00093	.00031	.00028	-.16387	-.00644	.00033	.00025
30.000	-.12232	.01009	.10747	-.00185	-.00005	.00085	-.12271	-.00276	.00003	.00037
45.000	-.09583	.00884	.07859	-.00108	.00012	.00082	-.09321	-.00143	.00018	.00060
60.000	-.07035	.00743	.06749	-.00093	.00050	.00038	-.07900	-.00083	.00053	.00032
GRADIENT	.00227	.00042	-.00463	-.00057	-.00011	.00028	.00222	.00065	-.00008	.00029

ORIGINAL PAGE IS
OF POOR QUALITY

CA20 (747/1 01 S1) - (747/1) D/S (054 - 035) (UGN054) (25 NOV 75)

REFERENCE DATA

SREF = 5500.0000 SQ.FT. XMRP = 1339.9000 IN.XC
LREF = 327.7800 IN. YMRP = .0000 IN.YC
BREF = 2348.0400 IN. ZMRP = 190.8000 IN.ZC
SCALE = .0300

PARAMETRIC DATA

ALPHAC = 4.000 BETAC = .000
ELV-IB = .000 ELV-OB = 3.000
ELEVON = 5.000 MACH = .600
PHI = .000 DX = 20.000
DY = .000 BETAO = .000

RN/L = 3.25 GRADIENT INTERVAL = .00/ 12.00

ALPHAO = 6.000

DZ	DCN	DCA	DCLM	DCY	DCBL	DCYN	DCL	DCD	DCSL	DCLN
.000	-.07156	.01120	-.01705	.00259	.00078	-.00175	-.07234	.00366	.00059	-.00182
3.000	-.06994	.01108	-.01227	.00213	.00068	-.00133	-.07072	.00371	.00054	-.00140
7.500	-.06674	.01084	-.00926	.00170	.00055	-.00092	-.06751	.00381	.00046	-.00097
15.000	-.06073	.01019	-.00582	.00144	.00045	-.00057	-.06146	.00378	.00039	-.00061
30.000	-.04880	.00815	.00230	.00042	.00021	-.00008	-.04938	.00301	.00028	-.00010
45.000	-.03816	.00732	-.00328	-.00069	-.00074	.00134	-.03871	.00329	-.00059	.00141
60.000	-.03268	.01099	-.03659	-.00179	-.00195	.00619	-.03365	.00752	-.00129	.00536
GRADIENT	.00065	-.00005	.00115	-.00012	-.00003	.00011	.00065	.00002	-.00002	.00011

RN/L = 3.27 GRADIENT INTERVAL = .00/ 12.00

ALPHAO = 10.000

DZ	DCN	DCA	DCLM	DCY	DCBL	DCYN	DCL	DCD	DCSL	DCLN
.000	-.12329	.00842	.13142	.00041	.00071	-.00094	-.12350	-.00451	.00061	-.00101
3.000	-.11798	.00878	.11985	-.00020	.00052	-.00053	-.11885	-.00360	.00047	-.00059
7.500	-.10917	.00928	.09599	-.00113	.00012	.00009	-.10954	-.00219	.00013	.00008
15.000	-.09558	.00943	.07571	-.00199	.00003	.00064	-.09604	-.00061	.00009	.00063
30.000	-.07473	.00811	.04981	-.00158	-.00023	.00075	-.07517	.00025	-.00015	.00077
45.000	-.06056	.00696	.04076	-.00107	-.00000	.00068	-.06095	.00060	.00007	.00068
60.000	-.04792	.00608	.03738	.00012	.00075	.00055	-.04830	.00104	.00091	.00047
GRADIENT	.00189	.00011	-.00477	-.00021	-.00008	.00014	.00187	.00031	-.00007	.00015

RN/L = 3.27 GRADIENT INTERVAL = .00/ 12.00

ALPHAO = 14.000

DZ	DCN	DCA	DCLM	DCY	DCBL	DCYN	DCL	DCD	DCSL	DCLN
.000	-.18339	.00522	.28500	.00079	.00067	-.00142	-.18390	-.01461	.00052	-.00148
3.000	-.18124	.00551	.27096	.00103	.00087	-.00113	-.18082	-.01347	.00075	-.00121
7.500	-.16562	.00578	.22836	-.00011	.00051	-.00042	-.16542	-.01057	.00047	-.00047
15.000	-.14204	.00851	.17009	-.00148	.00014	.00057	-.14215	-.00639	.00020	.00055
30.000	-.10832	.00844	.10795	-.00164	-.00025	.00088	-.10920	-.00359	-.00016	.00090
45.000	-.08839	.00778	.07879	-.00152	-.00034	.00094	-.08871	-.00150	-.00024	.00097
60.000	-.07161	.00712	.05540	-.00088	-.00051	.00054	-.07195	-.00040	-.00045	.00059
GRADIENT	.00319	.00021	-.00770	-.00013	-.00003	.00013	.00315	.00055	-.00001	.00014

CA20 (747/1 01 S1) - (747/1) D/S (055 - 035) (UGN055) (25 NOV 75)

REFERENCE DATA

SREF =	5500.0000 SQ.FT.	XMRP =	1339.9000 IN.XC		
LREF =	327.7800 IN.	YMRP =	.0000 IN.YC		
BREF =	2348.0400 IN.	ZMRP =	190.8000 IN.ZC		
SCALE =	.0300				

PARAMETRIC DATA

ALPHAC =	8.000	BETAC =	.000
ELV-IB =	.000	ELV-OB =	3.000
ELEVON =	5.000	MACH =	.600
PHI =	.000	DX =	.000
DY =	.000	BETAD =	.000

RN/L = 3.22 GRADIENT INTERVAL = .00/ 12.00

ALPHAD = 6.000

DZ	DCN	DCA	DCLM	DCY	DCBL	DCYN	DCL	DCD	DCSL	DCLN
.000	-.03191	-.00080	-.07717	.00039	-.00038	-.00150	-.03129	-.00633	-.00064	-.00141
3.000	-.03673	-.00154	-.08596	.00107	-.00042	-.00117	-.03591	-.00790	-.00092	-.00108
7.500	-.03718	-.00152	-.05508	.00059	-.00058	-.00081	-.03635	-.00795	-.00071	-.00069
15.000	-.03441	-.00295	-.04209	-.00025	-.00075	-.00028	-.03337	-.00689	-.00079	-.00014
30.000	-.02967	-.00383	-.02559	.00058	-.00081	-.00021	-.02855	-.00892	-.00084	-.00007
45.000	-.01182	-.00409	.04599	.00070	-.00013	.00065	-.01093	-.00508	-.00001	.00057
60.000	.01100	.00114	.34355	-.00110	.00776	.00425	.01064	.00303	.00838	.00284
GRADIENT	-.00065	-.00009	.00290	.00002	-.00003	.00009	-.00063	-.00020	-.00001	.00009

RN/L = 3.25 GRADIENT INTERVAL = .00/ 12.00

ALPHAD = 10.000

DZ	DCN	DCA	DCLM	DCY	DCBL	DCYN	DCL	DCD	DCSL	DCLN
.000	-.03018	-.00139	-.02497	.00243	.00035	-.00243	-.02645	-.01842	-.00008	-.00245
3.000	-.03470	-.00192	-.02005	.00159	.00010	-.00162	-.09300	-.01835	-.00018	-.00162
7.500	-.03774	-.00275	-.01649	.00007	-.00013	-.00069	-.08693	-.01754	-.00024	-.00065
15.000	-.07763	-.00391	-.01521	-.00031	-.00020	-.00017	-.07577	-.01733	-.00023	-.00013
30.000	-.06825	-.00491	-.01252	-.00037	-.00024	.00009	-.05552	-.01465	-.00022	.00013
45.000	-.04467	-.00529	-.00605	.00009	.00011	-.00002	-.04307	-.01295	.00010	-.00004
60.000	-.03334	-.00470	.00977	.00077	.00082	-.00006	-.03202	-.01042	.00080	-.00020
GRADIENT	.00141	-.00018	.00092	-.00032	-.00006	.00023	.00142	.00007	-.00002	.00004

RN/L = 3.27 GRADIENT INTERVAL = .00/ 12.00

ALPHAD = 14.000

DZ	DCN	DCA	DCLM	DCY	DCBL	DCYN	DCL	DCD	DCSL	DCLN
.000	-.18055	-.00162	.07901	.00181	.00088	-.00255	-.17793	-.03302	.00042	-.00268
3.000	-.17300	-.00146	.07813	.00084	.00062	-.00183	-.17011	-.03147	.00030	-.00191
7.500	-.15582	-.00233	.05519	.00028	.00046	-.00101	-.15285	-.02922	.00033	-.00108
15.000	-.13209	-.00370	.03459	-.00112	.00002	.00004	-.12844	-.02559	.00003	.00004
30.000	-.09703	-.00525	.01334	-.00154	-.00026	.00051	-.09464	-.02202	-.00017	.00055
45.000	-.07225	-.00520	.00628	-.00060	-.00008	.00021	-.07111	-.01643	-.00004	.00022
60.000	-.05497	-.00505	-.00506	-.00055	-.00031	-.00093	-.05311	-.01522	-.00031	.00003
GRADIENT	.00242	-.00010	-.00333	-.00020	-.00005	.00020	.00239	.00049	-.00002	.00021

ORIGINAL PAGE IS
OF POOR QUALITY

CA20 (747/1 01 S1) - (747/1 D/S (056 - 035) (UGN056) (25 NOV 75)

REFERENCE DATA

SREF = 5500.0000 SQ.FT. XMRP = 1339.9000 IN.XC
LREF = 327.7800 IN. YMRP = .0000 IN.YC
BREF = 2348.0400 IN. ZMRP = 190.8000 IN.ZC
SCALE = .0300

PARAMETRIC DATA

ALPHAC = 8.000 BETAC = .000
ELV-IB = .000 ELV-OB = 3.000
ELEVON = 5.000 MACH = .600
PHI = .000 DX = 10.000
DY = .000 BETAO = .000

RN/L = 3.30 GRADIENT INTERVAL = .00/ 12.00

ALPHAO = 6.000

DZ	DCN	DCA	DCLM	DCY	DCBL	DCYN	DCL	DCD	DCSL	DCLN
.000	-.03492	-.00253	-.09943	.00230	-.00008	-.00201	-.03395	-.00856	-.00043	-.00197
3.000	-.03730	-.00300	-.08939	.00203	-.00031	-.00147	-.03621	-.00943	-.00056	-.00139
7.500	-.03737	-.00339	-.07303	.00105	-.00063	-.00080	-.03622	-.00983	-.00075	-.00068
15.000	-.03538	-.00377	-.05624	.00046	-.00069	-.00038	-.03419	-.00985	-.00075	-.00026
30.000	-.03087	-.00480	-.03345	.00014	-.00085	-.00014	-.02956	-.01009	-.00085	.00001
45.000	-.03575	-.00428	.02040	-.00138	.00036	.00083	-.03446	-.01042	.00050	.00075
60.000	-.06575	.00171	.16699	-.00589	.00510	.00454	-.06504	-.00974	.00531	.00359
GRADIENT	-.00030	-.00011	.00351	-.00017	-.00007	.00016	-.00028	-.00016	-.00004	.00017

RN/L = 3.24 GRADIENT INTERVAL = .00/ 12.00

ALPHAO = 10.000

DZ	DCN	DCA	DCLM	DCY	DCBL	DCYN	DCL	DCD	DCSL	DCLN
.000	-.07948	-.00240	-.03361	.00146	.00086	-.00189	-.07785	-.01617	.00051	-.00201
3.000	-.07819	-.00289	-.02685	.00049	.00058	-.00106	-.07650	-.01642	.00039	-.00114
7.500	-.07420	-.00364	-.02103	-.00051	.00028	-.00026	-.07244	-.01647	.00023	-.00030
15.000	-.06641	-.00410	-.01880	-.00065	.00015	-.00003	-.06468	-.01557	.00015	-.00006
30.000	-.05212	-.00507	-.01510	-.00129	-.00001	.00033	-.05044	-.01405	.00005	.00033
45.000	-.04132	-.00518	-.00592	-.00058	.00011	.00022	-.03980	-.01228	.00015	.00020
60.000	-.03460	-.00512	.00936	.00047	.00018	-.00001	-.03319	-.01105	.00017	-.00004
GRADIENT	.00072	-.00017	.00165	-.00026	-.00008	.00021	.00074	-.00004	-.00004	.00022

RN/L = 3.23 GRADIENT INTERVAL = .00/ 12.00

ALPHAO = 14.000

DZ	DCN	DCA	DCLM	DCY	DCBL	DCYN	DCL	DCD	DCSL	DCLN
.000	-.14276	-.00323	.08506	.00027	.00096	-.00182	-.14003	-.02797	.00063	-.00195
3.000	-.13725	-.00325	.07772	-.00037	.00075	-.00110	-.13481	-.02703	.00055	-.00122
7.500	-.12661	-.00384	.06091	-.00102	.00047	-.00041	-.12401	-.02577	.00033	-.00048
15.000	-.11036	-.00467	.04287	-.00190	.00009	.00036	-.10787	-.02377	.00016	.00034
30.000	-.08499	-.00574	.01926	-.00223	-.00016	.00069	-.08289	-.02041	-.00004	.00071
45.000	-.06640	-.00615	.01299	-.00129	-.00005	.00054	-.06432	-.01759	.00004	.00054
60.000	-.05502	-.00611	.00770	-.00074	-.00005	.00029	-.05312	-.01557	.00001	.00030
GRADIENT	.00217	-.00009	-.00326	-.00017	-.00007	.00019	.00215	.00029	-.00003	.00019

CA20 (747/1 01 S1) - (747/1) D/S (057 - 035) (UGN057) (25 NOV 75)

REFERENCE DATA

SREF =	5500.0000 SQ.FT.	XMRP =	1339.9000 IN.XC		
LREF =	327.7800 IN.	YMRP =	.0000 IN.YC		
BREF =	2348.0400 IN.	ZMRP =	190.8000 IN.ZC		
SCALE =	.0300				

PARAMETRIC DATA

ALPHAC =	8.000	BETAC =	.000
ELV-IB =	.000	ELV-OB =	3.000
ELEVON =	5.000	MACH =	.600
PHI =	.000	DX =	20.000
DY =	.000	BETAO =	.000

RN/L = 3.24 GRADIENT INTERVAL = .00/ 12.00

ALPHAO = 6.000

DZ	DCN	DCA	DCLM	DCY	DCBL	DCYN	DCL	DCD	DCSL	DCLN
.000	-.03670	-.00484	-.12776	.00274	-.00013	-.00234	-.03520	-.01114	-.00054	-.00229
3.000	-.03696	-.00484	-.11156	.00207	-.00034	-.00179	-.03753	-.01153	-.00065	-.00171
7.500	-.03933	-.00473	-.09287	.00134	-.00049	-.00124	-.03781	-.01148	-.00070	-.00114
15.000	-.03726	-.00451	-.07207	.00099	-.00055	-.00077	-.03591	-.01091	-.00067	-.00065
30.000	-.03548	-.00447	-.03703	-.00017	-.00060	-.00014	-.03417	-.01056	-.00062	-.00003
45.000	-.02727	-.00447	.00252	-.00124	-.00134	.00057	-.02608	-.00914	-.00122	.00080
60.000	.02629	-.00741	.00851	.00067	-.00801	.00066	.02718	-.00274	-.00777	.00204
GRADIENT	-.00033	.00002	.00461	-.00018	-.00005	.00014	-.00033	-.00004	-.00002	.00015

RN/L = 3.27 GRADIENT INTERVAL = .00/ 12.00

ALPHAO = 10.000

DZ	DCN	DCA	DCLM	DCY	DCBL	DCYN	DCL	DCD	DCSL	DCLN
.000	-.06860	-.00544	-.04662	.00043	.00042	-.00151	-.06661	-.01727	.00015	-.00155
3.000	-.06814	-.00529	-.03855	-.00079	.00011	-.00065	-.06619	-.01699	-.00000	-.00065
7.500	-.06395	-.00529	-.03191	-.00113	-.00017	-.00013	-.06206	-.01631	-.00019	-.00010
15.000	-.06069	-.00532	-.02195	-.00220	-.00040	.00037	-.05984	-.01578	-.00033	.00043
30.000	-.04653	-.00589	-.01515	-.00199	-.00035	.00045	-.04678	-.01421	-.00027	.00051
45.000	-.03902	-.00520	-.00285	-.00131	-.00044	.00065	-.03753	-.01190	-.00034	.00061
60.000	-.03492	-.00575	.00762	.00019	-.00082	.00003	-.03339	-.01172	-.00080	.00017
GRADIENT	.00054	.00002	.00192	-.00020	-.00008	.00018	.00063	.00013	-.00004	.00019

RN/L = 3.29 GRADIENT INTERVAL = .00/ 12.00

ALPHAO = 14.000

DZ	DCN	DCA	DCLM	DCY	DCBL	DCYN	DCL	DCD	DCSL	DCLN
.000	-.12098	-.00529	.08528	.00065	.00055	-.00169	-.11822	-.02621	.00025	-.00176
3.000	-.11687	-.00556	.07585	-.00080	.00025	-.00071	-.11413	-.02577	.00012	-.00074
7.500	-.10988	-.00541	.06279	-.00169	.00013	.00013	-.10727	-.02441	.00015	.00010
15.000	-.09621	-.00604	.04430	-.00235	-.00005	.00061	-.09370	-.02265	.00006	.00061
30.000	-.07557	-.00679	.02639	-.00273	-.00039	.00087	-.07324	-.01981	-.00023	.00093
45.000	-.05108	-.00578	.01974	-.00207	-.00018	.00089	-.05899	-.01729	-.00003	.00090
60.000	-.05421	-.00638	.02203	-.00120	.00025	.00067	-.05228	-.01570	.00036	.00051
GRADIENT	.00149	-.00001	-.00299	-.00030	-.00005	.00024	.00146	.00025	-.00001	.00024

CA20 (747/1 01 S1) - (747/1) D/S (058 - 035) (UGN058) (25 NOV 75)

REFERENCE DATA

SREF =	5500.0000 SQ.FT.	XMRP =	1339.9000 IN.XC		
LREF =	327.7800 IN.	YMRP =	.0000 IN.YC		
BREF =	2348.0400 IN.	ZMRP =	190.8000 IN.ZC		
SCALE =	.0300				

PARAMETRIC DATA

ALPHAC =	4.000	BETAC =	.000
ELV-IB =	.000	ELV-OB =	3.000
ELEVON =	5.000	MACH =	.600
PHI =	.000	DX =	.000
DY =	10.000	BETAO =	.000

RN/L = 3.34 GRADIENT INTERVAL = .00/ 12.00

ALPHAO = 10.000

DZ	DCN	DCA	DCLM	DCY	DCBL	DCYN	DCL	DCD	DCSL	DCLN
.000	-.15078	.01548	.10640	-.00591	.00913	-.00683	-.15155	-.00038	.00837	-.00775
3.000	-.14200	.01509	.10292	-.00698	.00731	-.00430	-.14260	.00016	.00692	-.00505
7.500	-.12747	.01439	.08673	-.00963	.00552	-.00126	-.12828	.00099	.00536	-.00183
15.000	-.10998	.01321	.07065	-.01002	.00393	.00086	-.11076	.00164	.00399	.00044
30.000	-.08202	.01083	.04477	-.01138	.00177	.00391	-.08270	.00220	.00217	.00370
45.000	-.06338	.00915	.03290	-.00816	.00070	.00348	-.06399	.00247	.00106	.00339
60.000	-.04586	.00759	.02072	-.00467	-.00044	.00289	-.04640	.00275	-.00013	.00282
GRADIENT	.00311	-.00014	-.00270	-.00050	-.00047	.00074	.00311	.00018	-.00039	.00078

RN/L = 3.24 GRADIENT INTERVAL = .00/ 12.00

ALPHAO = 14.000

DZ	DCN	DCA	DCLM	DCY	DCBL	DCYN	DCL	DCD	DCSL	DCLN
.000	-.23943	.01322	.23874	-.01509	.01563	-.01097	-.23950	-.01188	.01440	-.01254
3.000	-.22715	.01403	.21892	-.01205	.01370	-.00869	-.22738	-.00979	.01271	-.01008
7.500	-.20671	.01458	.19013	-.01448	.01031	-.00335	-.20710	-.00711	.00990	-.00441
15.000	-.17421	.01411	.14502	-.01842	.00629	.00239	-.17473	-.00417	.00659	.00172
30.000	-.12716	.01231	.09025	-.01971	.00228	.00694	-.12775	-.00105	.00293	.00685
45.000	-.09885	.01063	.06342	-.01459	.00093	.00602	-.09942	.00024	.00155	.00559
60.000	-.07091	.00939	.04770	-.00897	.00044	.00397	-.07946	.00109	.00086	.00390
GRADIENT	.00438	.00018	-.00647	.00003	-.00071	.00103	.00434	.00063	-.00060	.00110

CA20 (747/1 01 S1) - (747/1) D/S (059 - 035) (USN059) (25 NOV 75)

REFERENCE DATA

SREF =	5500.0000 SQ.FT.	XMRP =	1339.9000 IN.XC		
LREF =	327.7800 IN.	YMRP =	.0000 IN.YC		
BREF =	2348.0400 IN.	ZMRP =	190.8000 IN.ZC		
SCALE =	.0300				

PARAMETRIC DATA

ALPHAC =	4.000	BETAC =	.000
ELV-IB =	.000	ELV-OB =	3.000
ELEVON =	5.000	MACH =	.600
PHI =	.000	DX =	10.000
DY =	10.000	BETAO =	.000

RN/L = 3.32 GRADIENT INTERVAL = .00/ 12.00

ALPHAO = 10.000

DZ	DCN	DCA	DCLH	DCY	DCBL	DCYN	DCL	DCD	DCSL	DCLN
.000	-.13097	.01247	.10076	-.00185	.00768	-.00724	-.13156	-.00129	.00698	-.00800
3.000	-.12574	.01264	.09836	-.00317	.00633	-.00500	-.12637	-.00057	.00577	-.00553
7.500	-.11287	.01186	.08251	-.00582	.00485	-.00218	-.11349	-.00001	.00459	-.00267
15.000	-.09895	.01144	.05602	-.00726	.00352	.00012	-.09951	.00104	.00382	-.00025
30.000	-.07575	.00956	.04619	-.01027	.00128	.00363	-.07633	.00159	.00165	.00347
45.000	-.06016	.00822	.03005	-.00782	.00035	.00334	-.06069	.00188	.00070	.00288
60.000	-.04659	.00709	.01229	-.00514	-.00059	.00281	-.04718	.00218	-.00028	.00225
GRADIENT	.00245	-.00009	-.00252	-.00053	-.00037	.00057	.00244	.00017	-.00030	.00071

RN/L = 3.25 GRADIENT INTERVAL = .00/ 12.00

ALPHAO = 14.000

DZ	DCN	DCA	DCLH	DCY	DCBL	DCYN	DCL	DCD	DCSL	DCLN
.000	-.19516	.00844	.22001	-.00263	.01356	-.01266	-.19498	-.01201	.01216	-.01401
3.000	-.18985	.00951	.21034	-.00367	.01.29	-.00922	-.18982	-.01029	.01026	-.01034
7.500	-.17544	.01093	.18506	-.01194	.00817	-.00240	-.17563	-.00741	.00763	-.00324
15.000	-.15129	.01141	.14209	-.01670	.00497	.00293	-.15165	-.00447	.00524	.00240
30.000	-.11355	.00999	.08924	-.01857	.00150	.00691	-.11397	-.00195	.00221	.00651
45.000	-.09002	.00901	.06376	-.01388	.00045	.00585	-.09046	-.00045	.00105	.00577
60.000	-.07288	.00814	.04564	-.00808	.00006	.00359	-.07333	.00048	.00044	.00365
GRADIENT	.00267	.00034	-.00474	-.00129	-.00072	.00138	.00262	.00022	-.00057	.00145

CA20 (747/1 01 S1) - (747/1) D/S (060 - 035) (UGN060) (25 NOV 75)

ORIGINAL PAGE IS OF POOR QUALITY

REFERENCE DATA

SREF = 5500.0000 SQ.FT. XMRP = 1339.9000 IN.XC
LREF = 327.7800 IN. YMRP = .0000 IN.YC
BRFF = 2348.0400 IN. ZMRP = 190.8000 IN.ZC
SCALE = .0300

PARAMETRIC DATA

ALPHAC = 8.000 BETAC = .000
ELV-IB = .000 ELV-OB = 3.000
ELEVON = 5.000 MACH = .600
PHI = .000 DX = .000
DY = 10.000 BETAO = .000

RN/L = 3.23 GRADIENT INTERVAL = .00/ 12.00

ALPHAO = 10.000

DZ	DCN	DCA	DCLM	DCY	DCBL	DCYN	DCL	DCD	DCSL	DCLN
.000	-.09245	-.00261	-.02183	-.01121	.00305	-.00438	-.09059	-.01662	.00225	-.00484
3.000	-.08857	-.00354	-.02289	-.01082	.00254	-.00263	-.08661	-.01686	.00204	-.00303
7.500	-.08244	-.00438	-.02653	-.00969	.00204	-.00132	-.08043	-.01663	.00178	-.00165
15.000	-.06931	-.00601	-.02513	-.01075	.00095	.00143	-.06721	-.01795	.00119	.00125
30.000	-.05384	-.00687	-.02332	-.01206	-.00059	.00404	-.05183	-.01612	.00004	.00410
45.000	-.04087	-.00707	-.01679	-.00605	-.00043	.00196	-.03902	-.01406	-.00009	.00200
60.000	-.02802	-.00682	-.00699	.00050	-.00012	-.00033	-.02641	-.01159	-.00017	-.00030
GRADIENT	.00134	-.00023	-.00064	.00021	-.00013	.00040	.00136	.00000	-.00006	.00041

RN/L = 3.20 GRADIENT INTERVAL = .00/ 12.00

ALPHAO = 14.000

DZ	DCN	DCA	DCLM	DCY	DCBL	DCYN	DCL	DCD	DCSL	DCLN
.000	-.17016	-.00228	.06242	-.01491	.01011	-.00897	-.16717	-.03179	.00840	-.01059
3.000	-.16173	-.00272	.05216	-.01654	.00756	-.00355	-.15880	-.03076	.00683	-.00481
7.500	-.14450	-.00422	.03631	-.02147	.00547	.00137	-.14157	-.02925	.00563	.00040
15.000	-.13153	-.00437	.01888	-.02217	.00294	.00498	-.12877	-.02715	.00376	.00440
30.000	-.08834	-.00765	-.00105	-.01829	.00065	.00628	-.08567	-.02288	.00173	.00607
45.000	-.06781	-.00771	-.00416	-.01206	-.00014	.00452	-.06544	-.01937	.00065	.00447
60.000	-.05369	-.00717	-.00559	-.00609	-.00005	.00207	-.05163	-.01638	.00031	.00205
GRADIENT	.00345	-.00027	-.00349	-.00086	-.00061	.00136	.00345	.00034	-.00036	.00144

CA20 (747/1 01 S1) - (747/1) D/S (061 - 035) (UGN061) (25 NOV 75)

REFERENCE DATA

SREF = 5500.0000 SQ.FT.	XMRP = 1339.9000 IN.XC		
LREF = 327.7800 IN.	YMRP = .0000 IN.YC		
BREF = 2348.0400 IN.	ZMRP = 190.8000 IN.ZC		
SCALE = .0300			

PARAMETRIC DATA

ALPHAC =	8.000	BETAC =	.000
ELV-IB =	.000	ELV-OB =	3.000
ELEVON =	5.000	MACH =	.600
PHI =	.000	DX =	10.000
DY =	10.000	BETAO =	.000

RN/L = 3.28 GRADIENT INTERVAL = .00/ 12.00

ALPHAO = 10.000

DZ	DCN	DCA	DCLM	DCY	DCBL	DCYN	DCL	DCD	DCSL	DCLN
.000	-.07379	-.00434	-.03084	-.00591	.00309	-.00513	-.07192	-.01709	.00215	-.00559
3.000	-.07131	-.00473	-.02911	-.00617	.00274	-.00368	-.06941	-.01704	.00206	-.00410
7.500	-.06622	-.00532	-.02835	-.00634	.00220	-.00203	-.06429	-.01674	.00182	-.00238
15.000	-.05877	-.00638	-.03045	-.00708	.00123	.00031	-.05577	-.01649	.00127	.00009
30.000	-.04403	-.00716	-.02539	-.00988	-.00006	.00312	-.04291	-.01484	.00048	.00309
45.000	-.03389	-.00618	-.01459	-.00474	-.00006	.00137	-.03231	-.01197	.00017	.00136
60.000	-.01886	-.00517	.00088	-.00027	-.00028	.00037	-.01768	-.00837	-.00022	.00041
GRADIENT	.00102	-.00013	.00032	-.00005	-.00012	.00041	.00103	.00005	-.00005	.00042

RN/L = 3.26 GRADIENT INTERVAL = .00/ 12.00

ALPHAO = 14.000

DZ	DCN	DCA	DCLM	DCY	DCBL	DCYN	DCL	DCD	DCSL	DCLN
.000	-.13143	-.00489	.05520	-.01099	.00716	-.00707	-.12859	-.02783	.00582	-.00821
3.000	-.12627	-.00497	.05765	-.01445	.00559	-.00285	-.12349	-.02682	.00501	-.00378
7.500	-.11656	-.00580	.04177	-.01771	.00413	.00110	-.11377	-.02605	.00425	.00036
15.000	-.09428	-.00768	.02132	-.02043	.00193	.00495	-.09152	-.02394	.00276	.00454
30.000	-.07659	-.00731	.00449	-.01790	.00007	.00608	-.07416	-.02050	.00113	.00598
45.000	-.05655	-.00743	.00866	-.01131	-.00021	.00425	-.05440	-.01714	.00053	.00422
60.000	-.04824	-.00593	-.00224	-.00616	.00001	.00181	-.04647	-.01422	.00032	.00178
GRADIENT	.00200	-.00014	-.00316	-.00088	-.00040	.00107	.00199	.00021	-.00021	.00113

CA20 (747/1 01 S1) - (747/1) D/S (062 - 034) (UGN062) (25 NOV 75)

REFERENCE DATA

SREF =	5500.0000 SQ.FT.	XMRP =	1339.9000 IN.XC		
LREF =	327.7800 IN.	YMRP =	.0000 IN.YC		
BREF =	2348.0400 IN.	ZMRP =	190.8000 IN.ZC		
SCALE =	.0300				

PARAMETRIC DATA

ALPHAC =	4.000	BETAC =	-5.000
ELV-IB =	.000	ELV-OB =	3.000
ELEVON =	5.000	MACH =	.600
PHI =	.000	DX =	.000
DY =	.000	BETAO =	.000

RN/L = 3.22 GRADIENT INTERVAL = .00/ 12.00

ALPHAO = 10.000

DZ	DCN	DCA	DCLM	DCY	DCBL	DCYN	DCL	DCD	DCSL	DCLN
.000	-.15494	.01227	.11263	.01589	.00130	.00077	-.15537	-.00400	.00137	.00063
3.000	-.15185	.01276	.11319	.01400	.00172	-.00182	-.15235	-.00318	.00152	-.00199
7.500	-.13726	.01339	.08968	.01049	.00133	-.00166	-.13791	-.00103	.00115	-.00179
15.000	-.11896	.01306	.07107	.00754	.00137	-.00180	-.11961	.00056	.00118	-.00193
30.000	-.08908	.01128	.04800	.00242	.00097	-.00065	-.08977	.00191	.00089	-.00075
45.000	-.07002	.00961	.03802	-.00086	.00001	.00082	-.07064	.00224	.00009	.00081
60.000	-.04966	.00810	.03042	-.00822	-.00161	.00441	-.05024	.00286	-.00114	.00455
GRADIENT	.00243	.00015	-.00323	-.00073	-.00000	-.00030	.00240	.00040	-.00003	-.00029

RN/L = 3.23 GRADIENT INTERVAL = .00/ 12.00

ALPHAO = 14.000

DZ	DCN	DCA	DCLM	DCY	DCBL	DCYN	DCL	DCD	DCSL	DCLN
.000	-.22904	.01327	.19068	.01612	.00121	.00121	-.22917	-.01074	.00133	.00108
3.000	-.22581	.01270	.19923	.01536	.00216	-.00163	-.22590	-.01097	.00198	-.00185
7.500	-.21212	.01286	.18618	.01317	.00225	-.00318	-.21230	-.00938	.00191	-.00340
15.000	-.18260	.01453	.14826	.00599	.00151	-.00110	-.18312	-.00464	.00139	-.00125
30.000	-.13472	.01375	.09777	.00004	.00050	.00071	-.13542	-.00041	.00057	.00066
45.000	-.10375	.01193	.06932	-.00099	.00040	.00057	-.10443	.00102	.00046	.00062
60.000	-.08192	.01053	.05357	-.00196	-.00024	.00115	-.08257	.00191	-.00011	.00117
GRADIENT	.00232	-.00005	-.00078	-.00040	.00013	-.00057	.00231	.00019	.00007	-.00058

CA20 (747/1 01 S1) - (747/1) D/S (063 - 034) (UGN063) (25 NOV 75)

REFERENCE DATA

SREF =	5500.0000 SQ.FT.	XMRP =	1339.9000 IN.XC		
LREF =	327.7800 IN.	YMRP =	.0000 IN.YC		
BREF =	2348.0400 IN.	ZMRP =	190.8000 IN.ZC		
SCALE =	.0300				

PARAMETRIC DATA

ALPHAC =	4.000	BETAC =	-5.000
ELV-IB =	.000	ELV-OB =	3.000
ELEVON =	5.000	MACH =	.600
PHI =	.000	DX =	10.000
DY =	.000	BETAO =	.000

RN/L = 3.30 GRADIENT INTERVAL = .00/ 12.00

ALPHAO = 10.000

DZ	DCN	DCA	DCLM	DCY	DCBL	DCYN	DCL	DCD	DCSL	DCLN
.000	-.12463	.00896	.09955	.01434	.00064	.00124	-.12489	-.00412	.00077	.00117
3.000	-.12422	.00919	.10582	.01417	.00117	-.00175	-.12450	-.00385	.00089	-.00187
7.500	-.11462	.01014	.08701	.01020	.00103	-.00143	-.11505	-.00190	.00087	-.00153
15.000	-.09973	.00974	.06775	.00825	.00088	-.00221	-.10020	-.00073	.00065	-.00229
30.000	-.07635	.00803	.04496	.00397	.00111	-.00154	-.07688	.00089	.00094	-.00165
45.000	-.05985	.00800	.03533	-.00005	.00017	.00038	-.06036	.00170	.00021	.00036
60.000	-.04550	.00679	.02715	-.00171	-.00060	.00111	-.04598	.00200	-.00048	.00116
GRADIENT	.00140	.00016	-.00187	-.00058	.00004	-.00032	.00137	.00031	.00001	-.00032

RN/L = 3.27 GRADIENT INTERVAL = .00/ 12.00

ALPHAO = 14.000

DZ	DCN	DCA	DCLM	DCY	DCBL	DCYN	DCL	DCD	DCSL	DCLN
.000	-.18956	.00674	.22442	.01878	.00141	-.00026	-.18922	-.01311	.00138	-.00040
3.000	-.18825	.00749	.21295	.01798	.00186	-.00302	-.18601	-.01202	.00153	-.00320
7.500	-.17650	.00922	.19365	.01357	.00164	-.00323	-.17659	-.00929	.00130	-.00339
15.000	-.15478	.01128	.15356	.00530	.00091	-.00047	-.15511	-.00496	.00086	-.00055
30.000	-.11709	.01150	.09949	.00180	.00063	-.00043	-.11765	-.00080	.00058	-.00049
45.000	-.09176	.01046	.07222	-.00083	.00025	.00047	-.09235	.00082	.00029	.00044
60.000	-.07345	.00935	.05416	-.00080	-.00012	.00054	-.07403	.00162	-.00006	.00065
GRADIENT	.00176	.00033	-.00412	-.00071	.00002	-.00037	.00172	.00052	-.00001	-.00037

CA20 (747/1 01 SI) - (747/1) D/S (064 - 034) (UGN064) (25 NOV 75)

REFERENCE DATA

SREF = 5500.0000 SQ.FT.	XMRP = 1339.9000 IN.XC		
LREF = 327.7800 IN.	YMRP = .0000 IN.YC		
BREF = 2348.0400 IN.	ZMRP = 190.8000 IN.ZC		
SCALE = .0300			

PARAMETRIC DATA

ALPHAC =	4.000	BETAC =	-5.000
ELV-IB =	.000	ELV-OB =	3.000
ELEVON =	5.000	MACH =	.600
PHI =	.000	DX =	20.000
DY =	.000	BETAO =	.000

RN/L = 3.30 GRADIENT INTERVAL = .00/ 12.00

ALPHAO = 10.000

DZ	DCN	DCA	DCLM	DCY	DCBL	DCYN	DCL	DCD	DCSL	DCLN
.000	-.11278	.00844	.08856	.01020	.00137	-.00002	-.11304	-.00339	.00136	-.00016
3.000	-.10856	.00861	.08140	.00938	.00141	-.00080	-.10887	-.00279	.00132	-.00095
7.500	-.10169	.00874	.06939	.00817	.00139	-.00183	-.10204	-.00193	.00118	-.00197
15.000	-.09098	.00927	.05644	.00590	.00127	-.00165	-.09145	-.00029	.00109	-.00178
30.000	-.07329	.00907	.03941	-.00003	.00067	.00045	-.07384	.00136	.00071	.00038
45.000	-.06028	.00837	.03289	-.00109	.00014	.00089	-.06082	.00202	.00023	.00086
60.000	-.04792	.00740	.02943	.00075	.00029	-.00001	-.04843	.00235	.00028	-.00004
GRADIENT	.00148	.00004	-.00256	-.00027	-.00000	-.00024	.00147	.00019	-.00003	-.00024

RN/L = 3.30 GRADIENT INTERVAL = .00/ 12.00

ALPHAO = 14.000

DZ	DCN	DCA	DCLM	DCY	DCBL	DCYN	DCL	DCD	DCSL	DCLN
.000	-.16931	.00470	.20862	.01733	.00428	-.00617	-.16887	-.01302	.00361	-.00659
3.000	-.16356	.00478	.20395	.01417	.00352	-.00476	-.16317	-.01234	.00300	-.00510
7.500	-.15255	.00615	.17902	.00969	.00287	-.00297	-.15236	-.00993	.00255	-.00326
15.000	-.13537	.00828	.14186	.00266	.00181	-.00007	-.13550	-.00592	.00180	-.00026
30.000	-.10655	.00914	.09440	-.00238	.00089	.00149	-.10703	-.00206	.00104	.00139
45.000	-.08634	.00844	.07260	-.00232	.00046	.00130	-.08675	-.00083	.00059	.00125
60.000	-.07108	.00768	.05425	-.00185	.00013	.00112	-.07150	.00020	.00025	.00110
GRADIENT	.00225	.00020	-.00407	-.00102	-.00018	.00042	.00222	.00044	-.00014	.00044

CA20 (747/1 01 S1) - (747/1) D/S (085 - 034) (UGN085) (25 NOV 75)

REFERENCE DATA

SREF =	5500.0000 SQ.FT.	XMRP =	1339.9800 IN.XC		
LREF =	327.7800 IN.	YMRP =	.0000 IN.YC		
BREF =	2348.0400 IN.	ZMRP =	190.8000 IN.ZC		
SCALE =	.0300				

PARAMETRIC DATA

ALPHAC =	8.000	BETAC =	-5.000
ELV-IB =	.000	ELV-OB =	3.000
ELEVON =	5.000	MACH =	.600
PHI =	.000	DX =	.000
DY =	.000	BETAO =	.000

RN/L = 3.22 GRADIENT INTERVAL = .00/ 12.00

ALPHAO = 10.000

DZ	DCN	DCA	DCLM	DCY	DCBL	DCYN	DCL	DCD	DCSL	DCLN
.000	-.10579	.00100	-.00523	.01417	.00042	.00253	-.10436	-.01739	.00085	.00241
3.000	-.10399	.00039	-.00348	.00983	.00086	.00135	-.10247	-.01768	.00108	.00118
7.500	-.09716	-.00034	-.00679	.00560	.00095	.00129	-.09582	-.01720	.00116	.00111
15.000	-.08712	-.00116	-.00737	.00247	.00192	.00044	-.08550	-.01627	.00197	.00010
30.000	-.06749	-.00256	-.00307	-.00375	.00162	.00278	-.06602	-.01424	.00208	.00246
45.000	-.03859	-.00397	.00032	-.00222	.00236	.00187	-.05110	-.01304	.00265	.00143
60.000	-.03716	-.00539	.00000	-.00110	.00278	.00118	-.03566	-.01176	.00294	.00089
GRADIENT	.00118	-.00018	-.00025	-.00113	.00007	-.00015	.00119	.00003	.00004	-.00016

RN/L = 3.23 GRADIENT INTERVAL = .00/ 12.00

ALPHAO = 14.000

DZ	DCN	DCA	DCLM	DCY	DCBL	DCYN	DCL	DCD	DCSL	DCLN
.000	-.18729	.00063	.09707	.02131	.00163	-.00075	-.18456	-.03190	.00147	-.00102
3.000	-.18294	.00095	.00268	.01697	.00186	-.00215	-.18033	-.03083	.00146	-.00244
7.500	-.16908	.00108	.06678	.00807	.00124	.00043	-.16571	-.02812	.00130	.00021
15.000	-.14654	.00048	.04673	.00073	.00129	.00179	-.14438	-.02505	.00158	.00154
30.000	-.11109	-.00181	.02898	-.00182	.00176	.00150	-.10909	-.02107	.00199	.00117
45.000	-.08634	-.00352	.01841	-.00445	.00155	.00243	-.08441	-.01646	.00195	.00212
60.000	-.06706	-.00469	.01394	-.00246	.00225	.00156	-.06523	-.01626	.00248	.00114
GRADIENT	.00282	.00006	-.00277	-.00178	-.00006	.00019	.00257	.00051	-.00002	.00020

ORIGINAL PAGE IS
OF POOR QUALITY

CA20 (747/1 01 SI) - (747/1) D/S (066 - 034) (UGN066) (25 NOV 75)

REFERENCE DATA

SREF =	5500.0000 SQ.FT.	XMRP =	1339.9000 IN.XC		
LREF =	327.7800 IN.	YMRP =	.0000 IN.YC		
BREF =	2348.0400 IN.	ZMRP =	190.8000 IN.ZC		
SCALE =	.0300				

PARAMETRIC DATA

ALPHAC =	8.000	BETAC =	-5.000
ELV-IB =	.000	ELV-OB =	3.000
ELEVON =	5.000	MACH =	.600
PHI =	.000	DX =	10.000
DY =	.000	BETAO =	.000

RN/L = 3.24 GRADIENT INTERVAL = .00/ 12.00

ALPHAO = 10.000

DZ	DCN	DCA	DCLM	DCY	DCBL	DCYN	DCL	DCD	DCSL	DCLN
.000	-.08478	-.00241	-.01655	.01140	.00171	.00326	-.08307	-.017.3	.00225	.00282
3.000	-.08518	-.00272	-.01235	.00810	.00200	.00205	-.08342	-.01747	.00232	.00167
7.500	-.08177	-.00310	-.01307	.00543	.00206	.00130	-.07999	-.01725	.00225	.00092
15.000	-.07370	-.00352	-.01401	.00389	.00206	.00014	-.07197	-.01627	.00264	-.00035
30.000	-.06076	-.00368	-.00492	-.00180	.00203	.00187	-.05920	-.01417	.00232	.00148
45.000	-.05017	-.00433	-.00028	-.00129	.00167	.00135	-.04866	-.01288	.00187	.00104
60.000	-.04155	-.00410	-.00260	-.00093	.00127	.00080	-.04021	-.01126	.00139	.00057
GRADIENT	.00043	-.00009	.00041	-.00078	.00004	-.00025	.00044	-.00002	-.00000	-.00026

RN/L = 3.25 GRADIENT INTERVAL = .00/ 12.00

ALPHAO = 14.000

DZ	DCN	DCA	DCLM	DCY	DCBL	DCYN	DCL	DCD	DCSL	DCLN
.000	-.15094	-.00408	.09070	.02023	.00206	-.00120	-.14794	-.03023	.00182	-.00154
3.000	-.14781	-.00361	.08512	.01660	.00231	-.00229	-.14494	-.02923	.00188	-.00265
7.500	-.13914	-.00287	.07209	.00951	.00167	-.00060	-.13652	-.02698	.00154	-.00083
15.000	-.12319	-.00280	.05137	.00304	.00177	.00075	-.12083	-.02415	.00187	.00043
30.000	-.09711	-.00343	.03418	.00060	.00193	.00038	-.09504	-.02024	.00197	.00004
45.000	-.07976	-.00379	.02550	-.00226	.00120	.00177	-.07769	-.01759	.00149	.00154
60.000	-.06464	-.00379	.01785	-.00111	.00099	.00100	-.06300	-.01496	.00115	.00091
GRADIENT	.00160	.00016	-.00251	-.00144	-.00006	.00010	.00155	.00044	-.00004	.00011

CA20 (747/1 01 S1) - (747/1) D/S (067 - 034) (UGN067) (25 NOV 75)

REFERENCE DATA

SREF =	5500.0000 SQ.FT.	XMRP =	1339.0000 IN.XC		
LREF =	327.7800 IN.	YMRP =	.0000 IN.YC		
BREF =	2348.0400 IN.	ZMRP =	190.8000 IN.ZC		
SCALE =	.0300				

PARAMETRIC DATA

ALPHAC =	8.000	BETAC =	-5.000
ELV-IB =	.000	ELV-OB =	3.000
ELEVON =	5.000	MACH =	.600
PHI =	.000	DX =	20.000
DY =	.000	BETAO =	.000

RN/L = 3.28 GRADIENT INTERVAL = .00/ 12.00

ALPHAO = 10.000

DZ	DCN	DCA	DCLM	DCY	DCBL	DCYN	DCL	DCD	DCSL	DCLN
.000	-.07815	-.00303	-.03703	.00517	-.00020	.00297	-.07644	-.01655	.00032	.00296
3.000	-.07953	-.00[illegible]3	-.02752	.00321	.00029	.00184	-.07774	-.01712	.00061	.00176
7.500	-.07777	-.00[illegible]4	-.02116	.00343	.00005	.00051	-.07616	-.01591	.00014	.00049
15.000	-.06911	-.00328	-.01753	.00246	.00073	-.00002	-.06749	-.01523	.00072	-.00015
30.000	-.05924	-.00241	-.00388	-.00281	-.00017	.00199	-.05782	-.01286	.00018	.00159
45.000	-.04976	-.00346	-.00099	-.00272	-.00063	.00145	-.04841	-.01205	-.00035	.00154
60.000	-.04380	-.00322	-.00505	-.00201	-.00021	.00081	-.04257	-.01078	-.00007	.00084
GRADIENT	.00008	.00009	.00206	-.00021	.00003	-.00033	.00006	.00010	-.00003	-.00033

RN/L = 3.29 GRADIENT INTERVAL = .00/ 12.00

ALPHAO = 14.000

DZ	DCN	DCA	DCLM	DCY	DCBL	DCYN	DCL	DCD	DCSL	DCLN
.000	-.13373	-.00457	.08430	.01545	.00203	-.00345	-.13098	-.02772	.00140	-.00375
3.000	-.12873	-.00381	.07512	.01163	.00124	-.00235	-.12611	-.02611	.00081	-.00253
7.500	-.12193	-.00276	.06937	.00631	.00077	-.00116	-.11960	-.02399	.00055	-.00128
15.000	-.10952	-.00223	.05494	-.00030	.00030	.00101	-.10757	-.02123	.00047	.00094
30.000	-.08776	-.00235	.04174	-.00385	.00015	.00220	-.08602	-.01755	.00054	.00214
45.000	-.07359	-.00257	.03283	-.00352	.00004	.00229	-.07202	-.01531	.00044	.00224
60.000	-.06078	-.00273	.01959	-.00298	-.00023	.00146	-.05938	-.01334	.00003	.00147
GRADIENT	.00157	.00024	-.00235	-.00122	-.00016	.00030	.00150	.00051	-.00011	.00033

CA20 (747/1 01 S1) - (747/1) D/S (068 - 034) (UGN068) (25 NOV 75)

REFERENCE DATA

SREF = 5500.0000 SQ.FT. XMRP = 1339.9000 IN.XC
LREF = 327.7800 IN. YMRP = .0000 IN.YC
BREF = 2348.0400 IN. ZMRP = 190.8000 IN.ZC
SCALE = .0300

PARAMETRIC DATA

ALPHAC = 4.000 BETAC = -5.000
ELV-IB = .000 ELV-OB = 3.000
ELEVON = 5.000 MACH = .600
PHI = .000 DX = .000
DY = 10.000 BETAO = .000

RN/L = 3.29 GRADIENT INTERVAL = .00/ 12.00

ALPHAO = 10.000

DZ	DCN	DCA	DCLM	DCY	DCBL	DCYN	DCL	DCD	DCSL	DCLN
.000	-.14040	.01453	.03531	-.00284	.00797	-.00258	-.14115	-.00022	.00766	-.00340
3.000	-.13265	.01461	.03707	-.00436	.00734	-.00171	-.13345	.00065	.00712	-.00247
7.500	-.11977	.01457	.03600	-.00779	.00597	.00046	-.12063	.00197	.00599	-.00015
15.000	-.10458	.01384	.03691	-.01189	.00391	.00309	-.10545	.00283	.00411	.00269
30.000	-.08047	.01191	.03370	-.01405	.00104	.00585	-.08127	.00344	.00165	.00571
45.000	-.06338	.00995	.02692	-.00828	.00050	.00333	-.06406	.00317	.00065	.00328
60.000	-.04710	.00780	.02098	-.00090	.00020	-.00017	-.04766	.00283	.00018	-.00019
GRADIENT	.00276	.00000	.00007	-.00067	-.00028	.00041	.00274	.00029	-.00024	.00044

RN/L = 3.22 GRADIENT INTERVAL = .00/ 12.00

ALPHAO = 14.000

DZ	DCN	DCA	DCLM	DCY	DCBL	DCYN	DCL	DCD	DCSL	DCLN
.000	-.21377	.01430	.10697	-.00776	.01357	-.00507	-.21410	-.00812	.01297	-.00646
3.000	-.20535	.01380	.11167	-.00739	.01240	-.00489	-.20567	-.00774	.01182	-.00616
7.500	-.18954	.01401	.10504	-.01183	.01060	-.00159	-.19006	-.00599	.01038	-.00269
15.000	-.16344	.01443	.08791	-.01990	.00739	.00409	-.16405	-.00273	.00777	.00330
30.000	-.12336	.01387	.06416	-.03141	.00101	.01342	-.12414	.00090	.00241	.01385
45.000	-.09797	.01224	.05407	-.01878	.00003	.00844	-.09871	.00193	.00091	.00839
60.000	-.07861	.01025	.04225	-.00814	.00031	.00326	-.07926	.00199	.00065	.00321
GRADIENT	.00324	-.00003	-.00035	-.00058	-.00040	.00049	.00323	.00031	-.00034	.00053

CA20 (747/1 01 S1) - (747/1) D/S (069 - 034) (UGN069) (25 NOV 75)

REFERENCE DATA

SREF = 5500.0000 SQ.FT.	XMRP = 1339.9000 IN.XC		
LREF = 327.7800 IN.	YMRP = .0000 IN.YC		
BREF = 2348.0400 IN.	ZMRP = 190.8000 IN.ZC		
SCALE = .0300			

PARAMETRIC DATA

ALPHAC =	4.000	BETAC =	-5.000
ELV-IB =	.000	ELV-09 =	3.000
ELEVON =	5.000	MACH =	.600
PHI =	.000	DX =	10.000
DY =	10.000	BETAO =	.000

RN/L = 3.25 GRADIENT INTERVAL = .00/ 12.00

ALPHAO = 10.000

DZ	DCN	DCA	DCLM	DCY	DCBL	DCYN	DCL	DCD	DCSL	DCLN
.000	-.12086	.01078	.04181	.00029	.00612	-.00284	-.12133	-.00194	.00579	-.00346
3.000	-.11681	.01115	.04432	-.00035	.00595	-.00253	-.11713	-.00110	.00565	-.00313
7.500	-.10735	.01166	.03871	-.00451	.00491	-.00036	-.10798	.00037	.00465	-.00087
15.000	-.09513	.01123	.04023	-.00917	.00320	.00224	-.09578	.00122	.00341	.00169
30.000	-.07536	.01052	.03346	-.01205	.00079	.00484	-.07604	.00259	.00129	.00473
45.000	-.06057	.00876	.02664	-.00808	.00021	.00319	-.06125	.00237	.00054	.00315
60.000	-.04754	.00701	.02493	-.00151	.00005	.00024	-.04801	.00200	.00008	.00025
GRADIENT	.00162	.00012	-.00048	-.00065	-.00017	.00034	.00180	.00031	-.00013	.00036

RN/L = 3.25 GRADIENT INTERVAL = .00/ 12.00

ALPHAO = 14.000

DZ	DCN	DCA	DCLM	DCY	DCBL	DCYN	DCL	DCD	DCSL	DCLN
.000	-.17940	.00818	.13316	-.00285	.01054	-.00502	-.17927	-.01062	.00535	-.00510
3.000	-.17620	.00804	.13764	-.00207	.01010	-.00534	-.17607	-.01042	.00549	-.00537
7.500	-.16593	.00979	.12514	-.00794	.00876	-.00173	-.16594	-.00760	.00653	-.00283
15.000	-.14591	.01125	.10116	-.01655	.00573	.00353	-.14579	-.00401	.00607	.00291
30.000	-.11217	.01166	.07117	-.02854	.00021	.01246	-.11277	-.00013	.00151	.01237
45.000	-.09105	.01052	.05935	-.01602	-.00018	.00702	-.09165	.00095	.00056	.00700
60.000	-.07408	.00899	.04599	-.00798	-.00007	.00300	-.07462	.00120	.00024	.00300
GRADIENT	.00165	.00023	-.00120	-.00083	-.00024	.00047	.00181	.00042	-.00019	.00049

ORIGINAL PAGE IS
OF POOR QUALITY

CA20 (747/1 01 SI) - (747/1) D/S (070 - 034) (UGN070) (25 NOV 75)

REFERENCE DATA

SREF =	5500.0000 SQ.FT.	XMRP =	1339.9000 IN.XC
LREF =	327.7800 IN.	YMRP =	.0000 IN.YC
BREF =	2348.0400 IN.	ZMRP =	190.8000 IN.ZC
SCALE =	.0300		

PARAMETRIC DATA

ALPHAC =	8.000	BETAC =	-5.000
ELV-IB =	.000	ELV-OB =	3.000
ELEVON =	5.000	MACH =	.600
PHI =	.000	DX =	.000
DY =	10.000	BETAO =	.000

RN/L = 3.26 GRADIENT INTERVAL = .00/ 12.00

ALPHAO = 10.000

DZ	DCN	DCA	DCLM	DCY	DCBL	DCYN	DCL	DCD	DCSL	DCLN
.000	-.10370	.00169	-.04712	-.00857	.00426	.00047	-.10242	-.01634	.00427	-.00028
3.000	-.09978	.00087	-.04211	-.01013	.00419	.00130	-.09842	-.01647	.00435	.00055
7.500	-.09382	.00030	-.03435	-.01254	.00361	.00307	-.09245	-.01600	.00409	.00239
15.000	-.08473	-.00031	-.02063	-.01528	.00233	.00530	-.08344	-.01503	.00321	.00481
30.000	-.06718	-.00197	-.00856	-.01322	.00108	.00556	-.06592	-.01361	.00203	.00529
45.000	-.05294	-.00329	-.00595	-.00791	.00111	.00348	-.05156	-.01243	.00170	.00334
60.000	-.03809	-.00485	-.00500	-.00211	.00169	.00109	-.03667	-.01139	.00164	.00079
GRADIENT	.00132	-.00018	.00170	-.00053	-.00009	.00035	.00133	.00005	-.00003	.00035

RN/L = 3.21 GRADIENT INTERVAL = .00/ 12.00

ALPHAO = 14.000

DZ	DCN	DCA	DCLM	DCY	DCBL	DCYN	DCL	DCD	DCSL	DCLN
.000	-.18651	.00272	.03168	-.01364	.00955	-.00248	-.18415	-.02971	.00897	-.00410
3.000	-.17568	.00259	.03077	-.01577	.00845	-.00011	-.17346	-.02795	.00830	-.00157
7.500	-.16002	.00209	.02336	-.01961	.00570	.00323	-.15795	-.02574	.00715	.00202
15.000	-.13829	.00131	.01876	-.02652	.00378	.00867	-.13642	-.02272	.00523	.00769
30.000	-.10784	-.00001	.01939	-.02793	.00028	.01228	-.10621	-.01873	.00241	.01205
45.000	-.08466	-.00180	.01321	-.01391	.00092	.00599	-.08306	-.01648	.00193	.00565
60.000	-.06720	-.00309	.00833	-.00812	.00102	.00342	-.06564	-.01471	.00160	.00319
GRADIENT	.00353	-.00009	-.00115	-.00080	-.00039	.00076	.00349	.00053	-.00024	.00081

CA20 (747/1 01 S1) - (747/1 D/S (071 - 034) (UGN071) (25 NOV 75)

REFERENCE DATA

SREF =	5500.0000 SQ.FT.	XMRP =	1339.9000 IN.XC
LREF =	327.7800 IN.	YMRP =	.0000 IN.YC
BREF =	2348.0400 IN.	ZMRP =	190.8000 IN.ZC
SCALE =	.0300		

PARAMETRIC DATA

ALPHAC =	8.000	BETAC =	-5.000
ELV-IB =	.000	ELV-OB =	3.000
ELEVON =	5.000	MACH =	.600
PHI =	.000	DX =	10.000
DY =	10.000	BETAO =	.000

RN/L = 3.25 GRADIENT INTERVAL = .00/ 12.00

ALPHAO = 10.000

DZ	DCN	DCA	DCLM	DCY	DCBL	DCYN	DCL	DCD	DCSL	DCLN
.000	-.06371	-.00026	-.04642	-.00554	.00295	.00014	-.08732	-.01585	.00293	-.00038
3.000	-.06583	-.00063	-.04052	-.00721	.00298	.00085	-.08521	-.01565	.00309	.00032
7.500	-.08255	-.00095	-.03217	-.00971	.00262	.00227	-.08113	-.01527	.00297	.00178
15.000	-.07479	-.00120	-.02218	-.01218	.00187	.00397	-.07343	-.01417	.00253	.00359
30.000	-.06172	-.00146	-.00901	-.01283	.00033	.00527	-.06053	-.01216	.00129	.00512
45.000	-.04876	-.00298	-.00516	-.00828	.00048	.00346	-.04750	-.01140	.00107	.00333
60.000	-.03593	-.00489	-.00430	-.00435	.00137	.00204	-.03454	-.01106	.00171	.00177
GRADIENT	.00083	-.00009	.00190	-.00055	-.00005	.00029	.00083	.00006	.00000	.00029

RN/L = 3.25 GRADIENT INTERVAL = .00/ 12.00

ALPHAO = 14.000

DZ	DCN	DCA	DCLM	DCY	DCBL	DCYN	DCL	DCD	DCSL	DCLN
.000	-.15055	-.00065	.04767	-.00876	.00572	-.00195	-.14855	-.02895	.00828	-.00309
3.000	-.14485	-.00041	.04473	-.01084	.00613	-.00045	-.14259	-.02555	.00595	-.00150
7.500	-.13388	-.00032	.03621	-.01623	.00469	.00302	-.13159	-.02353	.00514	.00216
15.000	-.11028	-.00027	.02872	-.02332	.00258	.00783	-.11642	-.02080	.00390	.00728
30.000	-.09543	-.00037	.02799	-.02389	-.00007	.01038	-.09490	-.01710	.00173	.01023
45.000	-.07665	-.00164	.01549	-.01303	.00042	.00533	-.07540	-.01495	.00135	.00532
60.000	-.06292	-.00272	.01251	-.00865	.00035	.00346	-.06149	-.01351	.00094	.00335
GRADIENT	.00232	.00004	-.00156	-.00101	-.00028	.00067	.00227	.00044	-.00015	.00071

DATE 04 DEC 75 TABULATED SOURCE DATA - CA20 (UGN072) (25 NOV 75)

CA20 (747/1 01 S1) - (747/1) D/S (072 - 036)

REFERENCE DATA

SREF =	5500.0000 SQ.FT.	XMRP =	1339.9000 IN.XC
LREF =	327.7800 IN.	YMRP =	.0000 IN.YC
BREF =	2348.0400 IN.	ZMRP =	190.8000 IN.ZC
SCALE =	.0300		

PARAMETRIC DATA

ALPHAC =	4.000	BETAC =	5.000
ELV-IB =	.000	ELV-OB =	3.000
ELEVON =	5.000	MACH =	.600
PHI =	.000	DX =	.000
DY =	10.000	BETAO =	.000

RN/L = 3.28 GRADIENT INTERVAL = .00/ 12.00

ALPHAO = 10.000

DZ	DCN	DCA	DCLM	DCY	DCBL	DCYN	DCL	DCD	DCSL	DCLN
.000	-.14442	.01562	.13294	-.00501	.00961	-.01087	-.14526	.00044	.00842	-.01182
3.000	-.13645	.01510	.11916	-.00631	.00766	-.00724	-.13728	.00076	.00695	-.00880
7.500	-.12166	.01392	.09511	-.01175	.00541	-.00198	-.12245	.00112	.00518	-.00253
15.000	-.10477	.01208	.06424	-.01253	.00366	.00131	-.10546	.00103	.00378	.00092
30.000	-.07869	.00976	.03407	-.01305	.00151	.00413	-.07927	.00148	.00193	.00335
45.000	-.06218	.00797	.02461	-.00952	.00077	.00312	-.06267	.00143	.00109	.00303
60.000	-.04502	.00592	.01642	-.00304	.00023	.00157	-.04539	.00118	.00040	.00154
GRADIENT	.00305	-.00023	-.00507	-.00092	-.00055	.00118	.00306	.00009	-.00043	.00124

RN/L = 3.22 GRADIENT INTERVAL = .00/ 12.00

ALPHAO = 14.000

DZ	DCN	DCA	DCLM	DCY	DCBL	DCYN	DCL	DCD	DCSL	DCLN
.000	-.23259	.01290	.25676	-.00502	.01536	-.01804	-.23267	-.01148	.01339	-.01955
3.000	-.22456	.01337	.24606	-.00655	.01285	-.01251	-.22473	-.01017	.01147	-.01379
7.500	-.20551	.01390	.21278	-.01263	.00942	-.00431	-.20583	-.00765	.00892	-.00527
15.000	-.17210	.01417	.15136	-.01457	.00605	.00050	-.17264	-.00359	.00607	-.00013
30.000	-.12736	.01224	.08470	-.01525	.00269	.00451	-.12794	-.00114	.00315	.00420
45.000	-.09859	.01035	.05359	-.01203	.00139	.00468	-.09913	-.00001	.00167	.00451
60.000	-.07226	.00897	.03638	-.00704	.00095	.00313	-.07877	.00075	.00128	.00301
GRADIENT	.00366	.00013	-.00599	-.00104	-.00079	.00183	.00363	.00051	-.00059	.00150

CA20 (747/1 01 S1) - (747/1) D/S (073 - 036 (UGN073) (25 NOV 75)

REFERENCE DATA

SREF =	5500.0000 SQ.FT.	XMRP =	1339.9000 IN.XC		
LREF =	327.7800 IN.	YMRP =	.0000 IN.YC		
EREF =	2348.0400 IN.	ZMRP =	150.8000 IN.ZC		
SCALE =	.0300				

PARAMETRIC DATA

ALPHAC =	4.000	EETAC =	5.000
ELV-IB =	.000	ELV-OB =	3.000
ELEVON =	5.000	MACH =	.600
PHI =	.000	DX =	10.000
DY =	10.000	EETAO =	.000

RN/L = 3.24 GRADIENT INTERVAL = .00/ 12.00

ALPHAO = 10.000

DZ	DCN	DCA	DCLM	DCY	DCBL	DCYN	DCL	DCD	DCSL	DCLN
.000	-.13223	.01258	.13731	.00164	.00863	-.01259	-.13282	-.00131	.00727	-.01342
3.000	-.12798	.01240	.12905	-.00098	.00695	-.00970	-.12549	-.00104	.00601	-.00933
7.500	-.11699	.01172	.10506	-.00659	.00500	-.00339	-.11747	-.00056	.00461	-.00390
15.000	-.10205	.01032	.07349	-.00950	.00335	.00047	-.10257	-.00040	.00338	.00012
30.000	-.07939	.00831	.03974	-.01122	.00113	.00356	-.07932	-.00003	.00150	.00542
45.000	-.06388	.00720	.02857	-.00930	.00047	.00315	-.05428	.00048	.00079	.00303
60.000	-.04699	.00604	.02678	-.00568	-.00011	.00246	-.04936	.00089	.00015	.00246
GRADIENT	.00208	-.00012	-.00438	-.00112	-.00048	.00122	.00208	.00010	-.00035	.00127

RN/L = 3.25 GRADIENT INTERVAL = .00/ 12.00

ALPHAO = 14.000

DZ	DCN	DCA	DCLM	DCY	DCBL	DCYN	DCL	DCD	DCSL	DCLN
.000	-.19719	.00917	.25902	.00136	.01280	-.01667	-.19707	-.01149	.01019	-.01784
3.000	-.19183	.00894	.24814	-.00146	.00895	-.01152	-.19182	-.01017	.00859	-.01250
7.500	-.17548	.01107	.20800	-.00835	.00706	-.00435	-.17567	-.00734	.00655	-.00507
15.000	-.15013	.01114	.14923	-.01215	.00452	.00047	-.15048	-.00462	.00455	-.00000
30.000	-.11428	.00943	.08441	-.01471	.00159	.00466	-.11464	-.00255	.00285	.00447
45.000	-.08949	.00821	.05505	-.01157	.00047	.00444	-.08996	-.00119	.00093	.00436
60.000	-.07267	.00748	.03845	-.00857	.00003	.00334	-.07306	-.00016	.00037	.00332
GRADIENT	.00295	.00025	-.00655	-.00131	-.00066	.00164	.00291	.00056	-.00048	.00170

CA20 (747/1 01 S1) - (747/1) D/S (074 - 038) (UGN074) (25 NOV 75)

REFERENCE DATA

SREF = 6500.0000 SQ.FT. XCG = 1339.5000 IN.XC
LREF = 327.7000 IN. YCG = .0000 IN.YC
BREF = 2018.0400 IN. ZCG = 120.0000 IN.ZC
SCALE = .0300

PARAMETRIC DATA

ALPHAC =	8.000	BETAC =	5.000
ELV-IB =	.000	ELV-OB =	3.000
ELEVON =	5.000	MACH =	.600
PHI =	.000	DX =	.000
DY =	10.000	BETAO =	.000

RN/L = 3.27 GRADIENT INTERVAL = .00/ 12.00

ALPHAO = 10.000

DZ	DCN	DCA	DCLN	DCY	DCBL	DCYN	DCL	DCD	DCSL	DCLN
.000	-.03000	-.00007	.01272	-.01083	.00572	-.00815	-.09428	-.01761	.00421	-.00902
3.000	-.02982	-.00180	.01182	-.01182	.00459	-.00433	-.09244	-.01832	.00377	-.00507
7.500	-.02940	-.00273	.00782	-.01178	.00378	-.00155	-.08861	-.01857	.00345	-.00218
15.000	-.02830	-.00322	.00320	-.01325	.00247	.00190	-.08100	-.01765	.00277	.00144
30.000	-.02618	-.00379	-.00069	-.00953	.00121	.00212	-.06451	-.01522	.00156	.00188
45.000	-.02382	-.00359	.00114	-.00549	.00091	.00149	-.05216	-.01295	.00115	.00131
60.000	-.04113	-.00342	.00171	-.00318	.00076	.00105	-.03991	-.01051	.00093	.00091
GRADIENT	.00059	-.00023	-.00069	-.00011	-.00025	.00086	.00062	-.00012	-.00010	.00089

RN/L = 3.22 GRADIENT INTERVAL = .00/ 12.00

ALPHAO = 14.000

DZ	DCN	DCA	DCLN	DCY	DCBL	DCYN	DCL	DCD	DCSL	DCLN
.000	-.17783	-.00029	.11143	-.01211	.00998	-.01265	-.17511	-.03112	.00763	-.01419
3.000	-.16975	-.00106	.10107	-.01476	.00727	-.00670	-.16598	-.03034	.00599	-.00786
7.500	-.15993	-.00230	.07269	-.01762	.00498	-.00132	-.15021	-.02882	.00467	-.00216
15.000	-.13421	-.00380	.04637	-.01701	.00295	.00219	-.13151	-.02705	.00329	.00165
30.000	-.10512	-.00454	.02559	-.01397	.00092	.00417	-.10372	-.02290	.00163	.00395
45.000	-.08317	-.00457	.01921	-.00817	.00007	.00254	-.08110	-.01904	.00051	.00248
60.000	-.06693	-.00521	.01416	-.00439	-.00058	.00123	-.06500	-.01675	-.00036	.00131
GRADIENT	.00334	-.00027	-.00526	-.00073	-.00065	.00149	.00333	.00031	-.00039	.00159

CA20 (747/1 01 SI) - (747/1) D/S (075 - 036) (UGN075) (25 NOV 75)

REFERENCE DATA

SREF = 5500.0000 SQ.FT.	XMRP = 1339.5000 IN.XC		
LREF = 327.7800 IN.	YMRP = .0000 IN.YC		
BREF = 2348.0400 IN.	ZMRP = 190.8000 IN.ZC		
SCALE = .0300			

PARAMETRIC DATA

ALPHAC = 8.000	BETAC = 5.000		
ELV-IB = .000	ELV-OB = 3.000		
ELEVON = 5.000	MACH = .600		
PHI = .000	DX = 10.000		
DY = 10.000	BETAO = .000		

RN/L = 3.24 GRADIENT INTERVAL = .00/ 12.00

ALPHAO = 10.000

DZ	DCN	DCA	DCLM	DCY	DCBL	DCYN	DCL	DCD	DCSL	DCLN
.000	-.08878	.00132	.00813	-.00515	.00571	-.00832	-.08765	-.01411	.00517	-.00936
3.000	-.08689	.00063	.00690	-.00667	.00570	-.00550	-.08568	-.01446	.00472	-.00641
7.500	-.09364	-.00018	.00531	-.00874	.00458	-.00215	-.08253	-.01473	.00413	-.00292
15.000	-.07736	-.00105	.00180	-.01034	.00297	.00144	-.07600	-.01447	.00317	.00090
30.000	-.06372	-.00123	-.00080	-.00835	.00210	.00246	-.06254	-.01228	.00249	.00206
45.000	-.05349	-.00127	.00204	-.00618	.00203	.00228	-.05246	-.01054	.00239	.00169
60.000	-.04294	-.00113	-.00242	-.00491	.00209	.00235	-.04209	-.00857	.00246	.00195
GRADIENT	.00065	-.00020	-.00037	-.00048	-.00028	.00082	.00069	-.00008	-.00014	.00085

RN/L = 3.23 GRADIENT INTERVAL = .00/ 12.00

ALPHAO = 19.000

DZ	DCN	DCA	DCLM	DCY	DCBL	DCYN	DCL	DCD	DCSL	DCLN
.000	-.17792	.00045	.13157	-.00563	.00804	-.01086	-.17530	-.03045	.00701	-.01227
3.000	-.17297	-.00003	.11606	-.00942	.00749	-.00623	-.17034	-.03007	.00629	-.00744
7.500	-.16049	-.00056	.09030	-.01293	.00538	-.00177	-.15789	-.02891	.00499	-.00267
15.000	-.14621	-.00238	.06865	-.01417	.00339	.00181	-.14358	-.02773	.00365	.00120
30.000	-.11879	-.00435	.03669	-.01548	.00004	.00388	-.11823	-.02491	.00072	.00382
45.000	-.09340	-.00489	.02641	-.00813	-.00146	.00212	-.09409	-.02156	-.00107	.00234
60.000	-.08081	-.00576	.01897	-.00478	-.00215	.00115	-.07858	-.01971	-.00192	.00151
GRADIENT	.00236	-.00019	-.00552	-.00083	-.00049	.00120	.00236	.00022	-.00027	.00126

CA20 (747/1 01 S1) - (747/1) D/S (076 - 034) (UCN076) (25 NOV 75)

REFERENCE DATA

SREF =	5500.0000 SQ.FT.	XMRP =	1339.9000 IN.XC		
LREF =	327.7800 IN.	YMRP =	.0000 IN.YC		
EREF =	2348.0400 IN.	ZMRP =	190.8000 IN.ZC		
SCALE =	.0300				

PARAMETRIC DATA

ALPHAC =	4.000	BETAC =	-5.000
ELV-IB =	.000	ELV-OB =	3.000
ELEVON =	5.000	MACH =	.600
PHI =	7.500	DX =	.000
DY =	.000	CITAO =	.000

RN/L = 3.22 GRADIENT INTERVAL = .00/ 12.00

ALPHAO = 10.000

DZ	DCN	DCA	DCLM	DCY	DCBL	DCYN	DCL	DCD	DCSL	DCLN
.000	-.14455	.01323	.11601	.00188	-.00197	.00623	-.14514	-.00195	-.00131	.00640
3.000	-.13990	.01299	.11513	.00321	-.00149	.00275	-.14049	-.00171	-.00119	.00289
7.500	-.12908	.01278	.10052	.00634	-.00060	-.00094	-.12971	-.00078	-.00070	-.00087
15.000	-.10833	.01207	.07189	.00452	-.00042	-.00099	-.10899	.00069	-.00052	-.00093
30.000	-.08160	.01049	.04885	.00406	.00013	-.00155	-.08225	.00190	-.00004	-.00157
45.000	-.06409	.00900	.03696	.00126	-.00047	-.00013	-.06469	.00225	-.00048	-.00008
60.000	-.04723	.00739	.02720	-.00363	-.00129	.00247	-.04774	.00241	-.00103	.00259
GRADIENT	.00209	-.00006	-.00216	.00060	.00018	-.00094	.00208	.00016	.00008	-.00095

RN/L = 3.24 GRADIENT INTERVAL = .00/ 12.00

ALPHAO = 14.000

DZ	DCN	DCA	DCLM	DCY	DCBL	DCYN	DCL	DCD	DCSL	DCLN
.000	-.22499	.01074	.21116	-.00072	-.00292	.00770	-.22488	-.01283	-.00210	.00796
3.000	-.21500	.01221	.20346	.00290	-.00213	.00378	-.21510	-.01033	-.00173	.00399
7.500	-.20074	.01317	.18881	.00577	-.00144	.00026	-.20102	-.00788	-.00141	.00041
15.000	-.17260	.01375	.14927	.00173	-.00151	.00145	-.17309	-.00437	-.00135	.00160
30.000	-.12828	.01245	.09508	.00413	-.00033	-.00104	-.12889	-.00082	-.00043	-.00100
45.000	-.09757	.01085	.06748	.00248	-.00034	-.00070	-.09817	.00059	-.00041	-.00066
60.000	-.07751	.00923	.05070	.00152	-.00052	-.00029	-.07805	.00108	-.00055	-.00023
GRADIENT	.00323	.00032	-.00300	.00085	.00019	-.00097	.00318	.00055	.00009	-.00059

CA20 (747/1 01 S1) - (747/1) D/S (077 - 034) (UGN077) (25 NOV 75)

REFERENCE DATA

SREF =	5500.0000 SQ.FT.	XMRP =	1339.8000 IN.XC		
LREF =	327.7800 IN.	YMRP =	.0000 IN.YC		
BREF =	2348.0400 IN.	ZMRP =	190.8000 IN.ZC		
SCALE =	.0300				

PARAMETRIC DATA

ALPHAC =	4.000	BETAC =	-5.000
ELV-IB =	.000	ELV-09 =	3.000
ELEVON =	5.000	MACH =	.600
PHI =	7.500	DX =	10.000
DY =	.000	BETAO =	.000

RN/L = 3.29 GRADIENT INTERVAL = .00/ 12.00

ALPHAO = 10.000

DZ	DCN	DCA	DCLM	DCY	DCBL	DCYN	DCL	DCD	DCSL	DCLN
.000	-.12360	.01009	.10443	.00511	-.00227	.00670	-.12397	-.00289	-.00155	.00690
3.000	-.12462	.01016	.11320	.00735	-.00125	.00227	-.12450	-.00292	-.00101	.00239
7.500	-.11747	.01054	.10248	.01118	-.00050	-.00144	-.11793	-.00180	-.00065	-.00139
15.000	-.10129	.01060	.07502	.01007	.00000	-.00240	-.10185	-.00005	-.00026	-.00259
30.000	-.07833	.00933	.05377	.00770	.00058	-.00271	-.07897	.00109	.00029	-.00275
45.000	-.06144	.00834	.03852	.00344	-.00036	-.00050	-.06198	.00187	-.00041	-.00046
60.000	-.04748	.00748	.02238	.00020	-.00027	.00079	-.04800	.00248	-.00019	.00081
GRADIENT	.00089	.00006	-.00043	.00081	.00023	-.00107	.00087	.00015	.00012	-.00108

RN/L = 3.29 GRADIENT INTERVAL = .00/ 12.00

ALPHAO = 14.000

DZ	DCN	DCA	DCLM	DCY	DCBL	DCYN	DCL	DCD	DCSL	DCLN
.000	-.18812	.00559	.22393	.00104	-.00328	.01047	-.18771	-.01371	-.00215	.01076
3.000	-.18591	.00710	.22243	.00512	-.00220	.00513	-.18564	-.01237	-.00165	.00533
7.500	-.17837	.00870	.21216	.00891	-.00144	.00020	-.17680	-.01004	-.00142	.00055
15.000	-.15607	.01059	.16376	.00611	-.00129	.00017	-.15532	-.00580	-.00127	.00030
30.000	-.11915	.01019	.10572	.00787	.00023	-.00243	-.11957	-.00232	-.00003	-.00244
45.000	-.09391	.00977	.07432	.00454	-.00006	-.00105	-.09431	-.00009	-.00017	-.00104
60.000	-.07492	.00817	05595	.00389	-.00011	-.00075	-.07537	.00029	-.00019	-.00074
GRADIENT	.00126	.00036	-.00236	.00103	.00024	-.00135	.00121	.00049	.00008	-.00137

ORIGINAL PAGE IS
OF POOR QUALITY

CA20 (747/1 01 S1) - (747/1) D/S (078 - 034) (UGN078) (25 NOV 75)

REFERENCE DATA

SREF =	5500.0000 SQ.FT.	XMRP =	1339.9000 IN.XC		
LREF =	327.7800 IN.	YMRP =	.0000 IN.YC		
BREF =	2348.0400 IN.	ZMRP =	190.8000 IN.ZC		
SCALE =	.0300				

PARAMETRIC DATA

ALPHAC =	8.000	BETAC =	-5.000
ELV-IB =	.000	ELV-OB =	3.000
ELEVON =	5.000	MACH =	.600
PHI =	7.500	DX =	.000
DY =	.000	BETAO =	.000

RN/L = 3.21 GRADIENT INTERVAL = .00/ 12.00

ALPHAO = 10.000

DZ	DCN	DCA	DCLM	DCY	DCBL	DCYN	DCL	DCD	DCSL	DCLN
.000	-.10140	.00067	-.00096	.00573	-.00178	.00501	-.09998	-.01694	-.00089	.00524
3.000	-.09943	-.00014	.00219	.00667	-.00102	.00149	-.09790	-.01741	-.00075	.00164
7.500	-.09234	-.00073	-.00274	.00625	-.00066	.00007	-.09082	-.01675	-.00064	.00019
15.000	-.08358	-.00134	-.00441	.00502	.00018	-.00104	-.08208	-.01583	-.00000	-.00106
30.000	-.06741	-.00236	.00100	-.00117	-.00018	.00152	-.06598	-.01403	.00017	.00151
45.000	-.05482	-.00304	.00275	.00029	.00056	.00070	-.05346	-.01252	.00067	.00059
60.000	-.04555	-.00381	.00151	.00149	.00118	.00028	-.04419	-.01165	.00121	.00007
GRADIENT	.00124	-.00018	-.00031	.00006	.00014	-.00063	.00125	.00004	.00003	-.00069

RN/L = 3.30 GRADIENT INTERVAL = .00/ 12.00

ALPHAO = 14.000

DZ	DCN	DCA	DCLM	DCY	DCBL	DCYN	DCL	DCD	DCSL	DCLN
.000	-.17747	-.00007	.08845	.00698	-.00135	.00565	-.17476	-.03089	-.00035	.00580
3.000	-.17376	-.00019	.08831	.00839	-.00093	.00196	-.17109	-.03036	-.00057	.00209
7.500	-.16112	-.00031	.07294	.00727	-.00069	.00026	-.15862	-.02829	-.00063	.00038
15.000	-.13998	-.00085	.05025	.00127	-.00092	.00203	-.13771	-.02514	-.00055	.00216
30.000	-.10762	-.00246	.03030	.00588	.00085	-.00202	-.10556	-.02111	.00049	-.00214
45.000	-.08569	-.00296	.02194	.00060	.00033	.00062	-.08387	-.01779	.00043	.00055
60.000	-.06981	-.00378	.01581	.00157	.00066	.00014	-.06909	-.01584	.00068	.00003
GRADIENT	.00223	-.00003	-.00217	.00002	.00009	-.00069	.00220	.00036	-.00004	-.00070

CA20 (747/1 01 S1) - (747/1) D/S (079 - 034) (UGN079) (25 NOV 75)

REFERENCE DATA

SREF =	5500.0000 SQ.FT.	XMRP =	1339.9000 IN.XC		
LREF =	327.7800 IN.	YMRP =	.0000 IN.YC		
EREF =	2348.0400 IN.	ZMRP =	190.6000 IN.ZC		
SCALE =	.0300				

PARAMETRIC DATA

ALPHAC =	8.000	BETAC =	-5.000
ELV-IB =	.000	ELV-OB =	3.000
ELEVON =	5.000	MACH =	.600
PHI =	7.500	DX =	10.000
DY =	.000	BETAO =	.000

RN/L = 3.28 GRADIENT INTERVAL = .00/ 12.00

ALPHAO = 10.000

DZ	DCN	DCA	DCLM	DCY	DCBL	DCYN	DCL	DCD	DCSL	DCLN
.000	-.09187	-.00070	-.00939	.00797	-.00168	.00549	-.09035	-.01655	-.00070	.00570
3.000	-.09348	-.00100	-.00897	.01009	-.00071	.00108	-.09188	-.01722	-.00051	.00119
7.500	-.09018	-.00138	-.00191	.01266	.00005	-.00235	-.08855	-.01701	-.00035	-.00232
15.000	-.03130	-.00155	-.00786	.00920	.00051	-.00155	-.07890	-.01564	.00023	-.00162
30.000	-.05251	-.00231	-.00069	.00227	.00061	.00027	-.05707	-.01417	.00055	.00016
45.000	-.05316	-.00336	.00688	.00268	.00123	.00040	-.05472	-.01306	.00128	.00018
60.000	-.04953	-.00491	.00716	.00095	.00151	.00238	-.04793	-.01344	.00190	.00208
GRADIENT	.00027	-.00009	.00080	.00062	.00023	-.00102	.00028	-.00004	.00004	-.00105

RN/L = 3.27 GRADIENT INTERVAL = .00/ 12.00

ALPHAO = 14.000

DZ	DCN	DCA	DCLM	DCY	DCBL	DCYN	DCL	DCD	DCSL	DCLN
.000	-.15149	-.00149	.09633	.01015	-.00347	.00535	-.14893	-.02778	-.00231	.00595
3.000	-.15464	-.00139	.10876	.01219	-.00245	.00131	-.15205	-.02823	-.00219	.00172
7.500	-.14808	-.00131	.09749	.01688	-.00122	-.00446	-.14560	-.02701	-.00198	-.00418
15.000	-.13163	-.00117	.07039	.00710	-.00150	-.00073	-.12864	-.02405	-.00160	-.00045
30.000	-.10641	-.00175	.04750	.00803	-.00029	-.00319	-.10449	-.02020	-.00064	-.00309
45.000	-.08854	-.00219	.03540	.00170	-.00045	.00043	-.08691	-.01754	-.00037	.00050
60.000	-.07435	-.00328	.02661	.00392	.00036	-.00044	-.07265	-.01614	.00027	-.00050
GRADIENT	.00053	.00002	-.00006	.00091	.00030	-.00143	.00052	.00012	.00004	-.00146

CA20 (747/1 01 S1) - (747/1) D/S (080 - 034) (UGN080) (25 NOV 75)

REFERENCE DATA

SREF =	5500.0000 SQ.FT.	XMRP =	1339.9000 IN.XC		
LREF =	327.7800 IN.	YMRP =	.0000 IN.YC		
BREF =	2348.0400 IN.	ZMRP =	190.8000 IN.ZC		
SCALE =	.0300				

PARAMETRIC DATA

ALPHAC =	4.000	BETAC =	-5.000
ELV-IB =	.000	ELV-OB =	3.000
ELEVON =	5.000	MACH =	.600
PHI =	7.500	DX =	.000
DY =	10.000	BETAO =	.000

RN/L = 3.33 GRADIENT INTERVAL = .00/ 12.00

ALPHAO = 10.000

DZ	DCN	DCA	DCLM	DCY	DCBL	DCYN	DCL	DCD	DCSL	DCLN
.000	-.13790	.01561	.03262	-.01056	.00422	.00145	-.13877	.00111	.00435	.00100
3.000	-.13255	.01515	.04373	-.01124	.00423	.00171	-.13341	.00121	.00439	.00126
7.500	-.12159	.01478	.04517	-.01226	.00348	.00269	-.12247	.00199	.00374	.00231
15.000	-.10633	.01387	.04404	-.01377	.00195	.00456	-.10720	.00268	.00241	.00433
30.000	-.08099	.01159	.03931	-.01125	.00023	.00469	-.08176	.00306	.00071	.00465
45.000	-.06493	.00979	.02950	-.00575	.00005	.00224	-.06550	.00295	.00029	.00222
60.000	-.05263	.00879	.01387	.00282	.00064	-.00197	-.05326	.00324	.00042	-.00203
GRADIENT	.00219	-.00011	.00157	-.00021	-.00010	.00017	.00219	.00012	-.00009	.00018

RN/L = 3.32 GRADIENT INTERVAL = .00/ 12.00

ALPHAO = 14.000

DZ	DCN	DCA	DCLM	DCY	DCBL	DCYN	DCL	DCD	DCSL	DCLN
.000	-.21622	.01474	.14235	-.02648	.00578	.00420	-.21658	-.00795	.00718	.00347
3.000	-.20996	.01464	.14333	-.02531	.00587	.00442	-.21034	-.00739	.00730	.00358
7.500	-.19450	.01466	.13110	-.02435	.00621	.00525	-.19497	-.00576	.00673	.00457
15.000	-.16903	.01496	.11455	-.02615	.00378	.00811	-.16957	-.00279	.00461	.00767
30.000	-.12763	.01393	.08002	-.02662	-.00040	.01167	-.12839	.00052	.00022	.01164
45.000	-.09945	.01194	.06014	-.01183	-.00011	.00519	-.10015	.00148	.00044	.00517
60.000	-.07967	.01012	.04349	-.00391	.00020	.00155	-.08028	.00173	.00037	.00152
GRADIENT	.00294	-.00001	-.00160	.00028	-.00008	.00014	.00292	.00030	-.00007	.00015

CA20 (747/1 01 51) - (747/1) D/S (081 - 024) (UGN091) (25 NOV 75)

REFERENCE DATA

SREF =	5500.0000 SQ.FT.	XMRP =	1339.9000 IN.XC		
LREF =	327.7800 IN.	YMRP =	.0000 IN.YC		
BREF =	2348.0400 IN.	ZMRP =	190.8000 IN.ZC		
SCALE =	.0300				

PARAMETRIC DATA

ALPHAC =	4.000	BETAC =	-5.000
ELV-IB =	.000	ELV-OB =	3.000
ELEVON =	5.000	MACH =	.600
PHI =	7.500	DX =	10.000
DY =	10.000	BETAO =	.000

RN/L = 3.26 GRADIENT INTERVAL = .00/ 12.00

ALPHAO = 10.000

DZ	DCN	DCA	DCLN	DCY	DCBL	DCYN	DCL	DCD	DCSL	DCLN
.000	-.11807	.01129	.04394	-.00699	.00347	.00129	-.11650	-.00112	.00359	.00092
3.000	-.11552	.01142	.04651	-.00713	.00348	.00112	-.11609	-.00072	.00369	.00075
7.500	-.10940	.01175	.04783	-.00759	.00293	.00172	-.10903	.00035	.00310	.00141
15.000	-.09625	.01153	.04396	-.00934	.00178	.00297	-.09593	.00141	.00208	.00277
30.000	-.07664	.01016	.03935	-.00908	.00027	.00372	-.07728	.00209	.00066	.00367
45.000	-.06134	.00838	.02822	-.00428	.00008	.00176	-.06190	.00212	.00027	.00174
60.000	-.04522	.00661	.01528	.00252	.00036	-.00136	-.04566	.00185	.00022	-.00139
GRADIENT	.00131	.00006	.00048	-.00008	-.00008	.00006	.00130	.00020	-.00007	.00007

RN/L = 3.25 GRADIENT INTERVAL = .00/ 12.00

ALPHAO = 14.000

DZ	DCN	DCA	DCLM	DCY	DCBL	DCYN	DCL	DCD	DCSL	DCLN
.000	-.17601	.00822	.14578	-.01402	.00538	.00192	-.17591	-.01022	.00555	.00135
3.000	-.17400	.00914	.14823	-.01528	.00576	.00231	-.17400	-.00910	.00597	.00169
7.500	-.16892	.00999	.13963	-.01680	.00536	.00355	-.16855	-.00746	.00560	.00293
15.000	-.14037	.01134	.12249	-.02118	.00316	.00700	-.14924	-.00428	.00388	.00653
30.000	-.11537	.01136	.08129	-.02385	-.00069	.01094	-.11593	-.00076	.00047	.01055
45.000	-.09205	.01001	.06293	-.00948	-.00013	.00439	-.09260	.00034	.00033	.00439
60.000	-.07354	.00851	.04449	-.00321	.00002	.00143	-.07403	.00077	.00017	.00142
GRADIENT	.00131	.00023	-.00090	-.00037	-.00002	.00022	.00128	.00037	-.00000	.00022

CA20 (747/1 01 S1) - (747/1) D/S (082 - 034) (UGN082) (25 NOV 75)

REFERENCE DATA

SREF = 5500.0000 SQ.FT. XMRP = 1339.9000 IN.XC
LREF = 327.7800 IN. YMRP = .0000 IN.YC
BREF = 2348.0400 IN. ZMRP = 190.8000 IN.ZC
SCALE = .0300

PARAMETRIC DATA

ALPHAC =	8.000	BETAC =	-5.000
ELV-IB =	.000	ELV-OB =	3.000
ELEVON =	5.000	MACH =	.600
PHI =	7.500	DX =	.000
DY =	10.000	BETAO =	.000

RN/L = 3.26 GRADIENT INTERVAL = .00/ 12.00

ALPHAO = 10.000

DZ	DCN	DCA	DCLM	DCY	DCBL	DCYN	DCL	DCD	DCSL	DCLN
.000	-.10007	.00206	-.04352	-.01071	.00238	.00180	-.09891	-.01535	.00266	.00136
3.000	-.09333	.00109	-.03528	-.01084	.00247	.00221	-.09702	-.01600	.00281	.00174
7.500	-.09402	.00038	-.02618	-.01150	.00207	.00306	-.09263	-.01595	.00257	.00265
15.000	-.08435	-.00056	-.01393	-.01177	.00156	.00417	-.08289	-.01520	.00226	.00393
30.000	-.06901	-.00240	-.00609	-.00809	.00101	.00351	-.06655	-.01417	.00161	.00329
45.000	-.05516	-.00333	-.00447	-.00415	.00089	.00207	-.05375	-.01285	.00124	.00169
60.000	-.04317	-.00427	-.00113	.00011	.00065	.00052	-.04177	-.01170	.00074	.00040
GRADIENT	.00082	-.00022	.00229	-.00011	-.00004	.00017	.00084	-.00007	-.00001	.00018

RN/L = 3.28 GRADIENT INTERVAL = .00/ 12.00

ALPHAO = 14.000

DZ	DCN	DCA	DCLM	DCY	DCBL	DCYN	DCL	DCD	DCSL	DCLN
.000	-.18817	.00332	.04251	-.02401	.00594	.00373	-.18589	-.02941	.00550	.00265
3.000	-.18015	.00283	.04587	-.02340	.00528	.00435	-.17791	-.02850	.00595	.00339
7.500	-.16718	.00236	.04397	-.02446	.00397	.00646	-.16505	-.02670	.00503	.00567
15.000	-.14590	.00137	.03439	-.02630	.00170	.00948	-.14392	-.02398	.00331	.00902
30.000	-.11299	-.00062	.02465	-.02117	-.00022	.00991	-.11115	-.02023	.00151	.00979
45.000	-.08910	-.00239	.01654	-.00808	.00085	.00373	-.08733	-.01783	.00148	.00552
60.000	-.07045	-.00344	.00900	-.00359	.00075	.00195	-.06979	-.01552	.00107	.00179
GRADIENT	.00281	-.00013	.00015	-.00007	-.00027	.00037	.00278	.00036	-.00020	.00041

CA20 (747/1 01 S1) - (747/1) D/S (083 - 034) (UGN083) (25 NOV 75)

REFERENCE DATA

SREF =	5500.0000 SQ.FT.	XMRP =	1339.9000 IN.XC		
LREF =	327.7800 IN.	YMRP =	.0000 IN.YC		
BREF =	2340.0400 IN.	ZMRP =	180.8000 IN.ZC		
SCALE =	.0300				

PARAMETRIC DATA

ALPHAC =	8.000	BETAC =	-5.000
ELV-1B =	.000	ELV-09 =	3.000
ELEVON =	5.000	MACH =	.600
PHI =	7.500	DX =	10.000
DY =	10.000	BETAO =	.000

RN/L = 3.25 GRADIENT INTERVAL = .00/ 12.00

ALPHAO = 10.000

DZ	DCN	DCA	DCLM	DCY	DCBL	DCYN	DCL	DCD	DCSL	DCLN
.000	-.09990	-.00026	-.04184	-.00838	.00114	.00186	-.08848	-.01537	.00145	.00164
3.000	-.09603	-.00064	-.03663	-.00771	.00130	.00151	-.08658	-.01592	.00154	.00126
7.500	-.09515	-.00076	-.02817	-.00779	.00110	.00189	-.08372	-.01553	.00141	.00165
15.000	-.09025	-.00075	-.01518	-.00931	.00041	.00332	-.07690	-.01467	.00093	.00320
30.000	-.06564	-.00180	-.00319	-.00755	.00012	.00321	-.06466	-.01301	.00069	.00314
45.000	-.05428	-.00245	-.00549	-.00362	-.00000	.00182	-.05303	-.01184	.00031	.00179
60.000	-.04705	-.00357	.00386	.00064	-.00120	.00092	-.04571	-.01168	-.00102	.00111
GRADIENT	.00063	-.00006	.00183	.00007	-.00001	.00001	.00063	.00005	-.00001	.00001

RN/L = 3.24 GRADIENT INTERVAL = .00/ 12.00

ALPHAO = 14.000

DZ	DCN	DCA	DCLM	DCY	DCBL	DCYN	DCL	DCD	DCSL	DCLN
.000	-.15104	-.00035	.05297	-.01692	.00335	.00319	-.14869	-.02658	.00355	.00255
3.000	-.14659	-.00009	.05735	-.01765	.00283	.00391	-.14630	-.02589	.00345	.00386
7.500	-.13905	-.00029	.05284	-.01914	.00198	.00556	-.13998	-.02443	.00291	.00514
15.000	-.12472	-.00011	.04549	-.02467	-.00027	.00966	-.12281	-.02177	.00141	.00955
30.000	-.10117	-.00076	.03257	-.01996	-.00142	.00934	-.09950	-.01831	.00023	.00544
45.000	-.08221	-.00193	.02140	-.00755	-.00007	.00322	-.08061	-.01624	.00049	.00318
60.000	-.06683	-.00299	.01331	-.00377	-.00055	.00202	-.06535	-.01456	-.00020	.00209
GRADIENT	.00164	.00000	-.00009	-.00030	-.00018	.00032	.00161	.00029	-.00012	.00035

CA20 (747/1 01 S1) - (747/1) B/S (084 - 035) (UGN084) (25 NOV 75)

REFERENCE DATA

SREF = 5500.0000 SQ.FT. XMRP = 1339.9000 IN.XC
LREF = 327.7800 IN. YMRP = .0000 IN.YC
BREF = 2348.0400 IN. ZMRP = 190.8000 IN.ZC
SCALE = .0300

PARAMETRIC DATA

ALPHAC =	4.000	BETAC =	.000
ELV-IB =	.000	ELV-OB =	3.000
ELEVON =	5.000	MACH =	.600
PHI =	7.500	DX =	.000
DY =	.000	BETAO =	.000

RN/L = 3.18 GRADIENT INTERVAL = .00/ 12.00

ALPHAO = 10.000

DZ	DCN	DCA	DCLM	DCY	DCBL	DCYN	DCL	DCD	DCSL	DCLN
.000	-.15790	.01371	.13033	-.01111	-.00246	.00502	-.15845	-.00287	-.00192	.00525
3.000	-.14847	.01361	.12444	-.00650	-.00194	.00279	-.14904	-.00198	-.00164	.00289
7.500	-.13607	.01312	.10489	-.00355	-.00130	.00137	-.13669	-.00117	-.00115	.00150
15.000	-.11301	.01210	.08127	-.00174	-.00117	.00064	-.11356	.00028	-.00110	.00076
30.000	-.08555	.01008	.05274	-.00055	-.00099	.00071	-.08614	.00108	-.00091	.00081
45.000	-.06549	.00844	.04070	.00157	-.00030	-.00047	-.06701	.00145	-.00035	-.00043
60.000	-.04740	.00629	.03089	.00409	.00054	-.00201	-.04786	.00169	.00032	-.00206
GRADIENT	.00290	-.00008	-.00347	.00098	.00015	-.00047	.00289	.00022	.00010	-.00049

RN/L = 3.19 GRADIENT INTERVAL = .00/ 12.00

ALPHAO = 14.000

DZ	DCN	DCA	DCLM	DCY	DCBL	DCYN	DCL	DCD	DCSL	DCLN
.000	-.25375	.00975	.27169	-.02355	-.00434	.01188	-.25338	-.01692	-.00308	.01227
3.000	-.24021	.01010	.25797	-.01788	-.00332	.00896	-.23995	-.01506	-.00237	.00916
7.500	-.22006	.01184	.22544	-.01141	-.00289	.00541	-.22010	-.01123	-.00231	.00593
15.000	-.18596	.01339	.17605	-.00323	-.00196	.00121	-.18624	-.00611	-.00182	.00141
30.000	-.13364	.01268	.10473	-.00085	-.00135	.00095	-.13423	-.00136	-.00124	.00108
45.000	-.10191	.01090	.07597	.00186	-.00062	-.00036	-.10250	.00019	-.00065	-.00030
60.000	-.08007	.00900	.05518	.00252	-.00023	-.00093	-.08057	.00059	-.00033	-.00090
GRADIENT	.00449	.00029	-.00625	.00160	.00019	-.00086	.00444	.00075	.00010	-.00097

CA20 (747/1 01 S1) - (747/1) D/S (085 - 035) (UGN085) (25 NOV 75)

REFERENCE DATA

SREF =	5500.0000 SQ.FT.	XMRP =	1339.9000 IN.XC
LREF =	327.7800 IN.	YMRP =	.0000 IN.YC
BREF =	2348.0400 IN.	ZMRP =	190.8000 IN.ZC
SCALE =	.0300		

PARAMETRIC DATA

ALPHAC =	4.000	EETAC =	.000
ELV-IB =	.000	ELV-OB =	3.000
ELEVON =	5.000	MACH =	.600
PHI =	7.500	DX =	10.000
DY =	.000	EETAO =	.000

RN/L = 3.25 GRADIENT INTERVAL = .00/ 12.00

ALPHAO = 10.000

DZ	DCN	DCA	DCLM	DCY	DCBL	DCYN	DCL	DCD	DCSL	DCLN
.000	-.13858	.01165	.12685	-.01041	-.00225	.00518	-.13904	-.00290	-.00170	.00539
3.000	-.13458	.01289	.12312	-.00800	-.00193	.00409	-.13520	-.00205	-.00154	.00426
7.500	-.12562	.01214	.11171	-.00323	-.00121	.00165	-.12620	-.00106	-.00103	.00177
15.000	-.10839	.01159	.08488	-.00054	-.00094	.00046	-.10900	.00019	-.00089	.00095
30.000	-.08227	.01007	.05490	.00003	-.00078	.00060	-.08287	.00141	-.00071	.00068
45.000	-.06540	.00883	.04257	.00217	-.00018	-.00050	-.06596	.00195	-.00023	-.00047
60.000	-.05126	.00755	.02900	.00225	.00006	-.00085	-.05177	.00215	-.00003	-.00065
GRADIENT	.00175	.00086	-.00205	.00097	.00014	-.00048	.00173	.00024	.00009	-.00049

RN/L = 3.26 GRADIENT INTERVAL = .00/ 12.00

ALPHAO = 14.000

DZ	DCN	DCA	DCLM	DCY	DCBL	DCYN	DCL	DCD	DCSL	DCLN
.000	-.21057	.00469	.27931	-.01532	-.00338	.00543	-.20990	-.01735	-.00248	.00374
3.000	-.20553	.00737	.26513	-.01420	-.00347	.00759	-.20518	-.01415	-.00265	.00782
7.500	-.19223	.00994	.23574	-.00714	-.00247	.00376	-.19221	-.01021	-.00207	.00359
15.000	-.16252	.01092	.17390	-.00165	-.00162	.00069	-.16277	-.00513	-.00151	.00106
30.000	-.12262	.01055	.11185	.00114	-.00100	.00010	-.12305	-.00232	-.00093	.00021
45.000	-.09534	.00937	.07835	.00193	-.00060	-.00034	-.09579	-.00065	-.00064	-.00027
60.000	-.07933	.00690	.06212	.00231	-.00028	-.00071	-.07983	.00056	-.00036	-.00059
GRADIENT	.00249	.00069	-.00597	.00113	.00013	-.00064	.00240	.00095	.00006	-.00055

CA20 (747/1 01 S1) - (747/1) D/S (086 - 035) (UCN086) (25 NOV 75)

REFERENCE DATA

SREF =	5500.0000 SQ.FT.	XMRP =	[illegible] 9000 IN.XC		
LREF =	327.7800 IN.	YMRP =	.0000 IN.YC		
BREF =	2348.0400 IN.	ZMRP =	190.8000 IN.ZC		
SCALE =	.0300				

PARAMETRIC DATA

ALPHAC =	8.000	BETAC =	.000
ELV-IB =	.000	ELV-OB =	3.000
ELEVON =	5.000	MACH =	.600
PHI =	7.500	DX =	.000
DY =	.000	BETAO =	.000

RN/L = 3.22 GRADIENT INTERVAL = .00/ 12.00

ALPHAO = 10.000

DZ	DCN	DCA	DCLM	DCY	DCBL	DCYN	DCL	DCD	DCSL	DCLN
.000	-.09140	-.00242	-.03134	-.00393	-.00072	.00023	-.08959	-.01826	-.00067	.00035
3.000	-.08855	-.00294	-.02413	-.00323	-.00069	.00044	-.08670	-.01828	-.00060	.00055
7.500	-.08176	-.00387	-.02066	-.00204	-.00064	.00036	-.07984	-.01801	-.00057	.00046
15.000	-.07344	-.00510	-.01775	-.00121	-.00056	.00029	-.07143	-.01778	-.00050	.00038
30.000	-.05964	-.00598	-.01099	.00117	-.00017	-.00041	-.05770	-.01625	-.00024	-.00039
45.000	-.04858	-.00571	-.00440	.00207	.00070	-.00074	-.04695	-.01408	.00055	-.00065
60.000	-.03847	-.00539	-.00323	.00129	.00209	-.00063	-.03695	-.01199	.00195	-.00083
GRADIENT	.00130	-.00019	.00137	.00025	.00001	.00001	.00132	.00004	.00001	.00001

RN/L = 3.21 GRADIENT INTERVAL = .00/ 12.00

ALPHAO = 14.000

DZ	DCN	DCA	DCLM	DCY	DCBL	DCYN	DCL	DCD	DCSL	DCLN
.000	-.17721	-.00247	.08393	-.01125	-.00281	.00422	-.17409	-.03320	-.00204	.00484
3.000	-.16716	-.00260	.07367	-.00803	-.00228	.00303	-.16417	-.03159	-.00172	.00358
7.500	-.15103	-.00338	.05265	-.00412	-.00163	.00137	-.14815	-.02955	-.00137	.00163
15.000	-.12897	-.00402	.03227	-.00132	-.00139	.00048	-.12715	-.02731	-.00129	.00071
30.000	-.09349	-.00527	.01690	.00074	-.00115	-.00011	-.09589	-.02345	-.00115	.00009
45.000	-.08063	-.00659	.01248	.00270	-.00044	-.00108	-.07826	-.02049	-.00062	-.00059
60.000	-.06594	-.00659	.01160	.00248	-.00009	-.00111	-.06379	-.01793	-.00028	-.00107
GRADIENT	.00350	-.00013	-.00421	.00094	.00016	-.00038	.00347	.00048	.00009	-.00040

CA20 (747/1 01 S1) - (747/1) D/S (097 - 035) (UGN087) (25 NOV 75)

REFERENCE DATA

SREF =	9500.0000 SQ.FT.	XMRP =	1339.0000 IN.XC		
LREF =	327.7600 IN.	YMRP =	.0000 IN.YC		
BREF =	2348.0400 IN.	ZMRP =	180.0000 IN.ZC		
SCALE =	.0300				

PARAMETRIC DATA

ALPHAC =	8.000	EETAC =	.000
ELV-IB =	.000	ELV-OB =	3.000
ELEVON =	5.000	MACH =	.600
PHI =	7.500	DX =	10.000
DY =	.000	EETAO =	.000

CN/L = 3.28 GRADIENT INTERVAL = .00/ 12.00

ALPHAO = 10.000

DZ	DCN	DCA	DCLM	DCY	DCBL	DCYN	DCL	DCD	DCSL	DCLN
.000	-.08331	-.00335	-.02803	-.00269	.00031	.00025	-.08442	-.01829	.00035	.00019
3.000	-.08330	-.00393	-.01958	-.00159	.00022	.00017	-.08363	-.01663	.00024	.00013
7.500	-.02206	-.00446	-.01342	-.00090	.30001	.00011	-.08004	-.01654	.00003	.00011
15.000	-.07707	-.00506	-.01343	-.00025	.00020	.00002	-.07502	-.01837	.00020	-.00002
30.000	-.06824	-.00552	-.00407	.00103	.00045	-.00013	-.06624	-.01729	.00042	-.00021
45.000	-.05705	-.00454	.00429	.00284	.00178	-.00064	-.05533	-.01477	.00164	-.00094
60.000	-.04772	-.00584	.00544	.00136	.00411	-.00010	-.04612	-.01335	.00403	-.00091
GRADIENT	.00059	-.00015	.00190	.00023	-.00004	-.00002	.00060	-.00004	-.00004	-.00001

CN/L = 3.27 GRADIENT INTERVAL = .00/ 12.00

ALPHAO = 14.000

DZ	DCN	DCA	DCLM	DCY	DCBL	DCYN	DCL	DCD	DCSL	DCLN
.000	-.15028	-.00438	.09371	-.00832	-.00155	.00332	-.14716	-.03039	-.00095	.00353
3.000	-.14836	-.00403	.09522	-.00655	-.00172	.00272	-.14540	-.02973	-.00122	.00293
7.500	-.13699	-.00499	.07780	-.00383	-.00117	.00159	-.13484	-.02870	-.00088	.00176
15.000	-.12681	-.00558	.05726	-.00137	-.00130	.00067	-.11929	-.02692	-.00116	.00069
30.000	-.09994	-.00660	.03625	.00133	-.00116	-.00024	-.09727	-.02385	-.00118	-.00004
45.000	-.08612	-.00681	.02099	.00392	-.00025	-.00143	-.08366	-.02147	-.00050	-.00137
60.000	-.07276	-.00[illegible]	.01[illegible]6	.00274	.00002	-.00166	-.07052	-.01904	-.00017	-.00105
GRADIENT	.00182	-.00[illegible]	.00[illegible]	.00060	.00005	-.00023	.00181	.00023	.00001	-.00024

ORIGINAL PAGE IS
OF POOR QUALITY

CA20 (747/1 01 S1) - (747/1) D/S (088 - 035) (USN088) (25 NOV 75)

REFERENCE DATA

SREF = 5500.0000 SQ.FT. XMRP = 1339.9000 IN.XC
LREF = 327.7800 IN. YMRP = .0000 IN.YC
BREF = 2248.0400 IN. ZMRP = 190.8000 IN.ZC
SCALE = .0300

PARAMETRIC DATA

ALPHAC = 4.000 BETAC = .000
ELV-IB = .000 ELV-OB = 3.000
ELEVON = 5.000 MACH = .600
PHI = 7.500 DX = .000
DY = 10.000 BETAO = .000

RN/L = 3.34 GRADIENT INTERVAL = .00/ 12.00

ALPHAO = 10.000

DZ	DCN	DCA	DCLM	DCY	DCBL	DCYN	DCL	DCD	DCSL	DCLN
.000	-.15119	.01538	.10961	-.01562	.00561	-.00058	-.15197	-.00051	.00551	-.00126
3.000	-.14493	.01481	.11044	-.01100	.00505	-.00155	-.14568	-.00042	.00486	-.00207
7.500	-.13226	.01427	.09983	-.00744	.00427	-.00160	-.13303	.00037	.00408	-.00204
15.000	-.11252	.01319	.07654	-.00800	.00260	.00059	-.11328	.00135	.00265	.00032
30.000	-.08425	.01097	.05045	-.00714	.00116	.00242	-.08494	.00211	.00141	.00228
45.000	-.06512	.00914	.03936	-.00409	.00037	.00190	-.06572	.00218	.00055	.00165
60.000	-.04922	.00741	.03386	.00083	-.00070	.00077	-.04973	.00222	-.00062	.00064
GRADIENT	.00255	-.00015	-.00139	.00107	-.00018	-.00011	.00255	.00012	-.00019	-.00010

RN/L = 3.32 GRADIENT INTERVAL = .00/ 12.00

ALPHAO = 14.000

DZ	DCN	DCA	DCLM	DCY	DCBL	DCYN	DCL	DCD	DCSL	DCLN
.000	-.24344	.01454	.25275	-.03149	.00961	-.00005	-.24363	-.01099	.00955	-.00105
3.000	-.23032	.01364	.23174	-.02569	.00825	-.00007	-.23048	-.01050	.00820	-.00093
7.500	-.21165	.01289	.20484	-.02078	.00638	.00082	-.21183	-.00931	.00643	.00015
15.000	-.17913	.01337	.15883	-.02139	.00341	.00500	-.17955	-.00542	.00392	.00462
30.000	-.13057	.01230	.09693	-.01612	.00086	.00589	-.13124	-.00143	.00147	.00576
45.000	-.10160	.01094	.06975	-.00934	.00039	.00380	-.10219	.00026	.00079	.00374
60.000	-.08045	.00943	.05256	-.00408	.00020	.00191	-.08099	.00097	.00040	.00187
GRADIENT	.00423	-.00022	-.00635	.00140	-.00043	.00012	.00423	.00023	-.00041	.00017

CA20 (747/1 01 S1) - (747/1) D/S (099 - 035) (UGN089) (25 NOV 75)

REFERENCE DATA

SREF =	5508.0000 SQ.FT.	XMRP =	1339.9000 IN.XC
LREF =	327.7800 IN.	YMRP =	.0000 IN.YC
BREF =	2348.0400 IN.	ZMRP =	190.8000 IN.ZC
SCALE =	.0300		

PARAMETRIC DATA

ALPHAC =	4.000	BETAC =	.000
ELV-IB =	.000	ELV-OB =	3.000
ELEVON =	5.000	MACH =	.600
PHI =	7.500	DX =	10.000
DY =	10.000	BETAO =	.000

RN/L = 3.32 GRADIENT INTERVAL = .00/ 12.00

ALPHAO = 10.000

DZ	DCN	DCA	DCLM	DCY	DCBL	DCYN	DCL	DCD	DCSL	DCLN
.000	-.13003	.01218	.10241	-.01052	.00446	-.00129	-.13059	-.00148	.00430	-.00175
3.000	-.12586	.01227	.10228	-.00757	.00392	-.00174	-.12645	-.00095	.00371	-.00214
7.500	-.11569	.01174	.09197	-.00540	.00331	-.00189	-.11629	-.00042	.00309	-.00222
15.000	-.10065	.01129	.06826	-.00628	.00206	.00021	-.10128	.00071	.00207	-.00001
30.000	-.07780	.00940	.04669	-.00733	.00055	.00246	-.07836	.00122	.00080	.00239
45.000	-.05092	.00805	.03060	-.00500	-.00007	.00220	-.05133	.00165	.00016	.00220
60.000	-.04260	.00711	.00708	-.00383	-.00047	.00232	-.04311	.00262	-.00023	.00235
GRADIENT	.00194	-.00006	-.00146	.00067	-.00015	-.00008	.00193	.00014	-.00016	-.00006

RN/L = 3.26 GRADIENT INTERVAL = .00/ 12.00

ALPHAO = 14.000

DZ	DCN	DCA	DCLM	DCY	DCBL	DCYN	DCL	DCD	DCSL	DCLN
.000	-.19499	.00826	.23217	-.01920	.00807	-.00193	-.19478	-.01217	.00722	-.00281
3.000	-.18951	.00883	.22079	-.01529	.00699	-.00190	-.18940	-.01103	.00676	-.00262
7.500	-.17803	.00830	.20057	-.01555	.00538	.00030	-.17806	-.00906	.00538	-.00228
15.000	-.15207	.01016	.15307	-.02033	.00247	.00576	-.15230	-.00579	.00305	.00547
30.000	-.11513	.00958	.09314	-.01330	.00087	.00486	-.11550	-.00250	.00137	.00475
45.000	-.09023	.00851	.05555	-.00955	-.00003	.00411	-.09063	-.00097	.00040	.00409
60.000	-.07139	.00751	.04646	-.00486	-.00008	.00226	-.07178	.00001	.00016	.00226
GRADIENT	.00228	.00018	-.00424	.00044	-.00036	.00032	.00225	.00042	-.00032	.00035

CA20 (747/1 01 S1) - (747/1) D/S (090 - 035) (UGN090) (25 NOV 75)

REFERENCE DATA

SREF =	5500.0000 SQ.FT.	XMRP =	1339.9000 IN.XC		
LREF =	327.7800 IN.	YMRP =	.0000 IN.YC		
BREF =	2348.0400 IN.	ZMRP =	190.8000 IN.ZC		
SCALE =	.0300				

PARAMETRIC DATA

ALPHAC =	8.000	BETAC =	.000
ELV-IB =	.000	ELV-OB =	3.000
ELEVON =	5.000	MACH =	.600
PHI =	7.500	DX =	.000
DY =	10.000	BETAO =	.000

RN/L = 3.27 GRADIENT INTERVAL = .00/ 12.00

ALPHAO = 10.000

DZ	DCN	DCA	DCLM	DCY	DCBL	DCYN	DCL	DCD	DCSL	DCLN
.000	-.09037	-.00295	-.01692	-.00878	.00233	-.00513	-.08849	-.01869	.00140	-.00546
3.000	-.08673	-.00397	-.01876	-.00698	.00195	-.00422	-.08472	-.01897	.00119	-.00449
7.500	-.08086	-.00520	-.01946	-.00780	.00107	-.00174	-.07873	-.01916	.00076	-.00190
15.000	-.07097	-.00826	-.02284	-.00592	.00040	-.00077	-.06880	-.01848	.00026	-.00083
30.000	-.05511	-.00771	-.01863	-.00732	-.00141	.00214	-.05294	-.01716	-.00102	.00235
45.000	-.04381	-.00748	-.01377	-.00326	-.00170	.00073	-.04185	-.01497	-.00155	.00101
60.000	-.03281	-.00647	-.01106	.00099	-.00186	-.00100	-.03099	-.01203	-.00200	-.00065
GRADIENT	.00127	-.00030	-.00032	.00010	-.00017	.00046	.00130	-.00007	-.00009	.00048

RN/L = 3.28 GRADIENT INTERVAL = .00/ 12.00

ALPHAO = 14.000

DZ	DCN	DCA	DCLM	DCY	DCBL	DCYN	DCL	DCD	DCSL	DCLN
.000	-.17661	-.00361	.08983	-.02226	.00622	-.00412	-.17330	-.03422	.00541	-.00513
3.000	-.16917	-.00400	.07879	-.02122	.00485	-.00187	-.16590	-.03332	.00445	-.00269
7.500	-.15378	-.00491	.05533	-.02281	.00280	.00260	-.15061	-.03144	.00321	.00208
15.000	-.13061	-.00622	.02818	-.02243	.00047	.00599	-.12755	-.02880	.00151	.00582
30.000	-.09723	-.00748	.00733	-.01179	-.00074	.00372	-.09446	-.02425	-.00008	.00379
45.000	-.07175	-.00762	.00301	-.00651	-.00183	.00223	-.06933	-.01995	-.00141	.00252
60.000	-.05944	-.00733	-.00110	-.00244	-.00173	.00054	-.05726	-.01754	-.00161	.00083
GRADIENT	.00307	-.00016	-.00465	-.00010	-.00046	.00090	.00306	.00038	-.00029	.00097

CA20 (747/1 01 S1) - (747/1) D/S (091 - 035) (UGN091) (25 NOV 75)

REFERENCE DATA

SREF =	5500.0000 SQ.FT.	XMRP =	1339.9000 IN.XC		
LREF =	327.7800 IN.	YMRP =	.0000 IN.YC		
BREF =	2348.0400 IN.	ZMRP =	190.8000 IN.ZC		
SCALE =	.0300				

PARAMETRIC DATA

ALPHAC =	8.000	BETAC =	.000
ELV-IB =	.000	ELV-OB =	3.000
ELEVON =	5.000	MACH =	.600
PHI =	7.500	DX =	10.000
DY =	10.000	BETAD =	.000

RN/L = 3.28 GRADIENT INTERVAL = .00/ 12.00

ALPHAD = 10.000

DZ	DCN	DCA	DCLM	DCY	DCBL	DCYN	DCL	DCD	DCSL	DCLN
.000	-.07944	-.00443	-.02106	-.00563	-.00009	-.00484	-.07746	-.01816	-.00033	-.00475
3.000	-.07790	-.00496	-.01951	-.00480	-.00049	-.00392	-.07585	-.01841	-.00117	-.00378
7.500	-.07205	-.00578	-.02047	-.00574	-.00117	-.00201	-.06995	-.01821	-.00151	-.00177
15.000	-.06642	-.00648	-.02144	-.00499	-.00172	-.00110	-.06429	-.01792	-.00189	-.00079
30.000	-.05267	-.00690	-.01572	-.00808	-.00353	.00218	-.05165	-.01611	-.00310	.00276
45.000	-.04385	-.00627	-.00695	-.00426	-.00329	.00087	-.04210	-.01379	-.00308	.00143
60.000	-.02724	-.00276	.00715	-.00142	-.00065	.00120	-.02635	-.00745	-.00044	.00130
GRADIENT	.00101	-.00018	.00005	-.00003	-.00015	.00038	.00103	-.00000	-.00008	.00040

RN/L = 3.28 GRADIENT INTERVAL = .00/ 12.00

ALPHAD = 14.000

DZ	DCN	DCA	DCLM	DCY	DCBL	DCYN	DCL	DCD	DCSL	DCLN
.000	-.13982	-.00659	.09507	-.01996	.00263	-.00180	-.13571	-.02989	.00228	-.00222
3.000	-.13819	-.00591	.09081	-.01765	.00175	-.00107	-.13310	-.02947	.00153	-.00135
7.500	-.12948	-.00673	.08952	-.02074	-.00027	.00330	-.12140	-.02824	.00031	.00329
15.000	-.10927	-.00783	.04389	-.02104	-.00206	.00574	-.10625	-.02669	-.00103	.00691
30.000	-.08554	-.00812	.01619	-.01296	-.00306	.00405	-.08382	-.02303	-.00232	.00452
45.000	-.06084	-.00704	.01100	-.00812	-.00440	.00280	-.05870	-.01750	-.00383	.00382
60.000	-.05564	-.00659	.00582	-.00488	-.00312	.00123	-.05463	-.01632	-.00265	.00175
GRADIENT	.00209	-.00014	-.00377	-.00015	-.00039	.00070	.00289	.00022	-.00026	.00076

CA20 (747/1 01 SI) - (747/1) D/S (092 - 036) (UGN092) (25 NOV 75)

REFERENCE DATA

SREF =	5500.0000 SQ.FT.	XMRP =	1339.9000 IN.XC		
LREF =	327.7800 IN.	YMRP =	.0000 IN.YC		
BREF =	2348.0400 IN.	ZMRP =	190.8000 IN.ZC		
SCALE =	.0300				

PARAMETRIC DATA

ALPHAC =	4.000	BETAC =	5.000
ELV-IB =	.000	ELV-OB =	3.000
ELEVON =	5.000	MACH =	.600
PHI =	7.500	DX =	.000
DY =	10.000	BETAO =	.000

RN/L = 3.38 GRADIENT INTERVAL = .00/ 12.00

ALPHAO = 10.000

DZ	DCN	DCA	DCLM	DCY	DCBL	DCYN	DCL	DCD	DCSL	DCLN
.000	-.14678	.01436	.12913	-.01678	.00576	-.00351	-.14748	-.00106	.00536	-.00409
3.000	-.13881	.01442	.11986	-.01453	.00464	-.00207	-.13955	-.00017	.00440	-.00254
7.500	-.12403	.01403	.09347	-.01085	.00380	-.00154	-.12482	.00099	.00362	-.00193
15.000	-.10602	.01257	.06461	-.01076	.00241	.00097	-.10676	.00142	.00250	.00072
30.000	-.08144	.00997	.03552	-.01059	.00059	.00380	-.08203	.00140	.00089	.00292
45.000	-.06473	.00891	.02820	-.00425	.00052	.00163	-.06531	.00209	.00069	.00155
60.000	-.04730	.00867	.02765	.00524	.00078	-.00254	-.04795	.00367	.00051	-.00261
GRADIENT	.00305	-.00005	-.00484	.00079	-.00026	.00025	.00304	.00027	-.00023	.00028

RN/L = 3.31 GRADIENT INTERVAL = .00/ 12.00

ALPHAO = 14.000

DZ	DCN	DCA	DCLM	DCY	DCBL	DCYN	DCL	DCD	DCSL	DCLN
.000	-.23101	.01206	.26139	-.02522	.00909	-.00478	-.23100	-.01215	.00854	-.00570
3.000	-.22027	.01140	.23511	-.02447	.00724	-.00161	-.22025	-.01169	.00703	-.00236
7.500	-.20308	.01206	.20197	-.02105	.00509	.00052	-.20323	-.00934	.00512	-.00002
15.000	-.17150	.01318	.15034	-.01822	.00279	.00293	-.17193	-.00481	.00308	.00282
30.000	-.12637	.01200	.08536	-.01239	.00118	.00391	-.12693	-.00128	.00159	.00377
45.000	-.09965	.01066	.05697	-.00800	.00052	.00328	-.09923	.00029	.00086	.00322
60.000	-.07912	.00958	.04229	-.00295	.00057	.00130	-.07959	.00126	.00070	.00124
GRADIENT	.00373	.00001	-.00788	.00057	-.00053	.00059	.00371	.00040	-.00045	.00074

CA20 (747/1 01 S1) - (747/1) D/S (033 - 038) (UGN093) (25 NOV 75)

REFERENCE DATA

SREF =	5500.0000 SQ.FT.	XMRP =	1339.9000 IN.XC		
LREF =	327.7800 IN.	YMRP =	.0000 IN.YC		
BREF =	2348.0400 IN.	ZMRP =	190.8000 IN.ZC		
SCALE =	.0300				

PARAMETRIC DATA

ALPHAC =	4.000	BETAC =	5.000
ELV-IB =	.000	ELV-OB =	3.000
ELEVON =	5.000	MACH =	.600
PHI =	7.500	DX =	10.000
DY =	10.000	BETAO =	.000

RN/L = 3.28 GRADIENT INTERVAL = .00/ 12.00

ALPHAO = 10.000

DZ	DCN	DCA	DCLM	DCY	DCBL	DCYN	DCL	DCD	DCSL	DCLN
.000	-.12487	.01182	.11836	-.01043	.00461	-.00429	-.12542	-.00130	.00413	-.00475
3.000	-.12053	.01178	.10978	-.00987	.00390	-.00324	-.12110	-.00088	.00354	-.00383
7.500	-.11147	.01168	.08566	-.00761	.00321	-.00231	-.11208	-.00003	.00295	-.00283
15.000	-.09745	.01047	.06010	-.00889	.00201	.00044	-.09801	.00022	.00204	.00023
30.000	-.07613	.00861	.02944	-.01047	.00024	.00373	-.07661	.00061	.00063	.00369
45.000	-.06316	.00757	.02435	-.00456	.00019	.00167	-.06360	.00093	.00036	.00164
60.000	-.05121	.00592	.01904	.00247	.00037	-.00104	-.05155	.00053	.00026	-.00107
GRADIENT	.00180	-.00002	-.00430	.00037	-.00018	.00026	.00180	.00017	-.00016	.00028

RN/L = 3.25 GRADIENT INTERVAL = .00/ 12.00

ALPHAO = 14.000

DZ	DCN	DCA	DCLM	DCY	DCBL	DCYN	DCL	DCD	DCSL	DCLN
.000	-.19357	.00585	.23586	-.01504	.00717	-.00544	-.19323	-.01342	.00657	-.00616
3.000	-.18852	.00761	.23897	-.01640	.00517	-.00197	-.18828	-.01213	.00494	-.00250
7.500	-.17946	.00976	.20538	-.01383	.00408	-.00117	-.17953	-.00853	.00394	-.00160
15.000	-.14948	.01011	.14798	-.01491	.00212	.00823	-.14971	-.00557	.00235	.00200
30.000	-.11447	.00971	.08566	-.01221	.00070	.00394	-.11465	-.00231	.00110	.00384
45.000	-.08891	.00877	.05422	-.00928	.00004	.00372	-.09033	-.00067	.00043	.00369
60.000	-.07578	.00799	.03923	-.00394	.00007	.00161	-.07620	.00003	.00024	.00159
GRADIENT	.00259	.00040	-.00655	.00019	-.00040	.00054	.00254	.00065	-.00034	.00058

DATE 04 DEC 75 TABULATED SOURCE DATA - CA20

CA20 (747/1 01 S1) - (747/1) D/S (094 - 036) (UGN094) (25 NOV 75)

REFERENCE DATA

SREF =	5500.0000 SQ.FT.	XMRP =	1339.9000 IN.XC
LREF =	327.7800 IN.	YMRP =	.0000 IN.YC
BREF =	2348.0400 IN.	ZMRP =	190.8000 IN.ZC
SCALE =	.0300		

PARAMETRIC DATA

ALPHAC =	8.000	BETAC =	5.000
ELV-IB =	.000	ELV-OB =	3.000
ELEVON =	5.000	MACH =	.600
PHI =	7.500	DX =	.000
DY =	10.000	BETAO =	.000

RN/L = 3.26 GRADIENT INTERVAL = .00/ 12.00

ALPHAO = 10.000

DZ	DCN	DCA	DCLM	DCY	DCBL	DCYN	DCL	DCD	DCSL	DCLN
.000	-.08987	-.00205	.00934	-.01024	.00239	-.00774	-.08915	-.01762	.00101	-.00803
3.000	-.08732	-.00328	.00350	-.00946	.00103	-.00509	-.08542	-.01839	.00013	-.00519
7.500	-.08391	-.00419	-.00048	-.00812	.00021	-.00298	-.08191	-.01870	-.00031	-.00297
15.000	-.07704	-.00483	-.00628	-.00844	-.00076	-.00006	-.07503	-.01813	-.00076	.00008
30.000	-.06345	-.00469	-.00386	-.00409	-.00084	.00035	-.06167	-.01564	-.00077	.00060
45.000	-.05290	-.00459	-.00104	-.00127	-.00019	-.00020	-.05129	-.01371	-.00022	-.00016
60.000	-.04297	-.00454	-.00121	.00071	.00067	-.00057	-.04153	-.01193	.00056	-.00068
GRADIENT	.00079	-.00028	-.00127	.00028	-.00028	.00062	.00083	-.00014	-.00017	.00065

RN/L = 3.28 GRADIENT INTERVAL = .00/ 12.00

ALPHAO = 14.000

DZ	DCN	DCA	DCLM	DCY	DCBL	DCYN	DCL	DCD	DCSL	DCLN
.000	-.17822	-.00326	.12564	-.02920	.00393	-.00241	-.17495	-.03415	.00336	-.00304
3.000	-.16883	-.00330	.10706	-.02736	.00226	.00016	-.16569	-.03257	.00225	-.00024
7.500	-.15485	-.00342	.07717	-.02398	.00091	.00239	-.15191	-.03026	.00131	.00220
15.000	-.13549	-.00453	.05155	-.01750	-.00045	.00288	-.13265	-.02789	.00005	.00291
30.000	-.10819	-.00407	.02834	-.00972	-.00037	.00244	-.10584	-.02280	.00006	.00247
45.000	-.08887	-.00308	.02192	-.00435	.00029	.00112	-.08693	-.01847	.00048	.00106
60.000	-.07457	-.00242	.01701	-.00147	.00112	.00033	-.07302	-.01534	.00116	.00013
GRADIENT	.00311	-.00002	-.00548	.00070	-.00038	.00063	.00307	.00052	-.00027	.00059

CA20 (747/1 01 S1) - (747/1) D/S (095 - 036) (UGN095) (25 NOV 75)

REFERENCE DATA

SREF =	5500.0000 SQ.FT.	XMRP =	1339.9000 IN.XC
LREF =	327.7200 IN.	YMRP =	.0000 IN.YC
BREF =	2348.0400 IN.	ZMRP =	190.8000 IN.ZC
SCALE =	.0300		

PARAMETRIC DATA

ALPHAC =	8.000	BETAC =	5.000
ELV-IB =	.000	ELV-OB =	3.000
ELEVON =	5.000	MACH =	.600
PHI =	7.500	DX =	10.000
DY =	10.000	BETAO =	.000

RN/L = 3.26 GRADIENT INTERVAL = .00/ 12.00

ALPHAO = 10.000

DZ	DCN	DCA	DCLM	DCY	DCBL	DCYN	DCL	DCD	DCSL	DCLN
.000	-.08974	.00081	.01084	-.00856	.00502	-.00595	-.08852	-.01478	.00393	-.00654
3.000	-.09033	.00052	.00860	-.00821	.00470	-.00387	-.08905	-.01517	.00395	-.00483
7.500	-.09093	-.00012	.00592	-.00814	.00413	-.00179	-.08746	-.01554	.00378	-.00248
15.000	-.09143	.00007	.00065	-.01101	.00353	.00168	-.08020	-.01407	.00377	.00104
30.000	-.07080	.00018	.00284	-.00850	.00310	.00268	-.06958	-.01208	.00352	.00210
45.000	-.05195	.00010	.00440	-.00559	.00399	.00212	-.05103	-.01065	.00429	.00140
60.000	-.04418	.00127	.00059	-.00503	.00495	.00248	-.04373	-.00642	.00531	.00159
GRADIENT	.00014	-.00013	-.00065	.00005	-.00012	.00054	.00016	-.00010	-.00002	.00055

RN/L = 3.25 GRADIENT INTERVAL = .00/ 12.00

ALPHAO = 14.000

DZ	DCN	DCA	DCLM	DCY	DCBL	DCYN	DCL	DCD	DCSL	DCLN
.000	-.14668	-.00301	.12447	-.02117	.00321	-.00192	-.14393	-.02843	.00282	-.00245
3.000	-.14412	-.00323	.11924	-.02266	.00215	.00130	-.14137	-.02821	.00234	.00091
7.500	-.13391	-.00377	.08323	-.02109	.00100	.00294	-.13122	-.02697	.00150	.00272
15.000	-.12303	-.00314	.07515	-.01757	.00104	.00420	-.12061	-.02445	.00176	.00395
30.000	-.10699	-.00017	.04775	-.01212	.00335	.00410	-.10534	-.01875	.00402	.00345
45.000	-.08427	.00193	.03927	-.00789	.00431	.00314	-.09317	-.01447	.00479	.00234
60.000	-.08246	.00286	.03013	-.00509	.00548	.00249	-.08171	-.01150	.00583	.00151
GRADIENT	.00175	-.00010	-.00499	.00004	-.00029	.00053	.00174	.00020	-.00018	.00067

ORIGINAL PAGE IS
OF POOR QUALITY

CA20 (747/1 01 S1) - (747/1) D/S (096 - 034) (UGN096) (25 NOV 75)

REFERENCE DATA

SREF = 5500.0000 SQ.FT. XMRP = 1339.9000 IN.XC
LREF = 327.7800 IN. YMRP = .0000 IN.YC
BREF = 2348.0400 IN. ZMRP = 190.8000 IN.ZC
SCALE = .0300

PARAMETRIC DATA

ALPHAC = 4.000 BETAC = -5.000
ELV-IB = .000 ELV-OB = 3.000
ELEVON = 5.000 MACH = .600
PHI = 7.500 DX = .000
DY = 10.000 BETAO = -5.000

RN/L = 3.28 GRADIENT INTERVAL = .00/ 12.00

ALPHAO = 10.000

DZ	DCN	DCA	DCLM	DCY	DCBL	DCYN	DCL	DCD	DCSL	DCLN
.000	-.15753	.01512	.10007	-.01599	.00141	.00420	-.15825	-.00143	.00184	.00403
3.000	-.15049	.01486	.10224	-.01400	.00155	.00383	-.15122	-.00095	.00194	.00365
7.500	-.14028	.01472	.09629	-.01214	.00143	.00393	-.14105	-.00002	.00183	.00376
15.000	-.12091	.01377	.07933	-.01050	.00066	.00400	-.12169	.00105	.00107	.00391
30.000	-.09154	.01177	.05703	-.00178	.00089	.00070	-.09227	.00213	.00095	.00051
45.000	-.07222	.00981	.04339	-.00048	.00019	.00068	-.07285	.00221	.00026	.00065
60.000	-.05055	.00795	.03029	-.00451	-.00108	.00243	-.05110	.00262	-.00082	.00253
GRADIENT	.00230	-.00005	-.00057	.00050	-.00000	-.00003	.00229	.00019	-.00000	-.00003

RN/L = 3.28 GRADIENT INTERVAL = .00/ 12.00

ALPHAO = 14.000

DZ	DCN	DCA	DCLM	DCY	DCBL	DCYN	DCL	DCD	DCSL	DCLN
.000	-.23391	.01500	.17092	-.03529	.00336	.00884	-.23420	-.00954	.00426	.00344
3.000	-.23044	.01571	.16578	-.03355	.00373	.00946	-.23082	-.00846	.00470	.00901
7.500	-.21794	.01585	.16519	-.02906	.00370	.00973	-.21840	-.00701	.00460	.00830
15.000	-.18941	.01579	.15311	-.02408	.00226	.00800	-.18903	-.00399	.00308	.00772
30.000	-.14074	.01428	.10031	-.01774	-.00019	.00830	-.14146	-.00051	.00073	.00827
45.000	-.10859	.01249	.07019	-.00529	.00046	.00278	-.10930	.00107	.00075	.00271
60.000	-.08567	.01046	.05249	-.00132	.00035	.00098	-.08630	.00145	.00045	.00094
GRADIENT	.00218	.00011	.00172	.00084	.00004	-.00003	.00216	.00034	.00004	-.00003

CA20 (747/1 01 S1) - (747/1) D/S (097 - 034) (UGN097) (25 NOV 75)

REFERENCE DATA

SREF =	5500.0000 SQ.FT.	XMRP =	1339.9000 IN.XC		
LREF =	327.7800 IN.	YMRP =	.0000 IN.YC		
BREF =	2348.0400 IN.	ZMRP =	190.8000 IN.ZC		
SCALE =	.0300				

PARAMETRIC DATA

ALPHAC =	8.000	BETAC =	-5.000
ELV-IB =	.000	ELV-OB =	3.000
ELEVON =	5.000	MACH =	.600
PHI =	7.500	DX =	.000
DY =	10.000	BETAO =	-5.000

RN/L = 3.25 GRADIENT INTERVAL = .00/ 12.00

ALPHAO = 10.000

DZ	DCN	DCA	DCLM	DCY	DCBL	DCYN	DCL	DCD	DCSL	DCLN
.000	-.12040	.00398	.00372	-.01873	-.00094	.00492	-.11926	-.01699	-.00007	.00501
3.000	-.11615	.00307	.00354	-.01594	-.00062	.00449	-.11492	-.01715	.00017	.00453
7.500	-.11038	.00174	.00701	-.01351	-.00043	.00446	-.10898	-.01745	.00035	.00446
15.000	-.09747	.00021	.00605	-.00839	.00022	.00345	-.09602	-.01671	.00081	.00336
30.000	-.07819	-.00200	.00332	-.00287	.00074	.00190	-.07665	-.01555	.00105	.00174
45.000	-.06229	-.00373	-.00025	-.00065	.00110	.00112	-.06059	-.01449	.00127	.00091
60.000	-.04216	-.00557	-.01218	-.00211	.00189	.00152	-.04055	-.01280	.00212	.00117
GRADIENT	.00133	-.00030	.00046	.00063	.00007	-.00005	.00137	-.00006	.00005	-.00007

RN/L = 3.26 GRADIENT INTERVAL = .00/ 12.00

ALPHAO = 14.000

DZ	DCN	DCA	DCLM	DCY	DCBL	DCYN	DCL	DCD	DCSL	DCLN
.000	-.21884	.00471	.10178	-.03315	.00258	.00665	-.21633	-.03336	.00369	.00610
3.000	-.20800	.00471	.09535	-.02855	.00264	.00629	-.20565	-.03148	.00369	.00574
7.500	-.19257	.00399	.07859	-.02461	.00207	.00626	-.19044	-.02953	.00313	.00580
15.000	-.16762	.00262	.05708	-.02127	.00082	.00713	-.16553	-.02653	.00205	.00589
30.000	-.12836	-.00000	.02899	-.01013	.00089	.00482	-.12641	-.02229	.00171	.00460
45.000	-.10086	-.00219	.01712	-.00425	.00122	.00240	-.09884	-.01967	.00162	.00215
60.000	-.07407	-.00404	.00622	-.00098	.00170	.00124	-.07225	-.01664	.00189	.00093
GRADIENT	.00348	-.00010	-.00305	.00112	-.00007	-.00005	.00345	.00050	-.00008	-.00004

CA20 (747/1 01 S1) - (747/1 D/S (098 - 035) (UGN098) (25 NOV 75)

REFERENCE DATA

SREF =	5500.0000 SQ.FT.	XMRP =	1339.9000 IN.XC
LREF =	327.7800 IN.	YMRP =	.0000 IN.YC
BREF =	2348.0400 IN.	ZMRP =	190.8000 IN.ZC
SCALE =	.0300		

PARAMETRIC DATA

ALPHAC =	4.000	BETAC =	.000
ELV-IB =	.000	ELV-OB =	3.000
ELEVON =	5.000	MACH =	.600
PHI =	7.500	DX =	.000
DY =	10.000	BETAO =	-5.000

RN/L = 3.29 GRADIENT INTERVAL = .00/ 12.00

ALPHAO = 10.000

DZ	DCN	DCA	DCLM	DCY	DCBL	DCYN	DCL	DCD	DCSL	DCLN
.000	-.17684	.01379	.18458	-.01833	.00297	.00119	-.17732	-.00477	.00309	.00087
3.000	-.16706	.01362	.17319	-.01109	.00291	-.00131	-.16757	-.00392	.00276	-.00160
7.500	-.14860	.01370	.13863	-.00874	.00196	-.00019	-.14922	-.00191	.00193	-.00040
15.000	-.12500	.01304	.10161	-.01029	.00023	.00314	-.12568	-.00010	.00055	.00310
30.000	-.09392	.01156	.06739	-.00290	.00004	.00152	-.09462	.00168	.00020	.00151
45.000	-.07378	.01020	.05079	.00220	.00045	-.00048	-.07444	.00243	.00039	-.00092
60.000	-.05397	.00977	.04000	.00554	.00167	-.00394	-.05460	.00409	.00126	-.00400
GRADIENT	.00379	-.00001	-.00625	.00122	-.00014	-.00015	.00377	.00039	-.00016	-.00013

RN/L = 3.27 GRADIENT INTERVAL = .00/ 12.00

ALPHAO = 14.000

DZ	DCN	DCA	DCLM	DCY	DCBL	DCYN	DCL	DCD	DCSL	DCLN
.000	-.26382	.01208	.29562	-.04021	.00363	.00560	-.26354	-.01556	.00419	.00519
3.000	-.25436	.01212	.28373	-.03263	.00397	.00411	-.25423	-.01453	.00439	.00369
7.500	-.23638	.01189	.25585	-.02493	.00364	.00343	-.23633	-.01280	.00399	.00303
15.000	-.19909	.01271	.19184	-.02134	.00185	.00515	-.19933	-.00817	.00252	.00493
30.000	-.14398	.01281	.11095	-.01925	-.00104	.00653	-.14453	-.00231	-.00014	.00650
45.000	-.11234	.01214	.08015	-.00558	-.00004	.00279	-.11300	.00033	.00025	.00278
60.000	-.08009	.01095	.05053	.00122	.00059	-.00026	-.08074	.00149	.00055	-.00032
GRADIENT	.00358	-.00003	-.00537	.00201	-.00000	-.00028	.00357	.00035	-.00003	-.00028

DATE 04 DEC 75 TABULATED SOURCE DATA - CA20

CA20 (747/1 01 SI) - (747/1) D/S (099 - 035) (UGH859) (25 NOV 75)

REFERENCE DATA

SREF =	5500.0000 SQ.FT.	XMRP =	1339.9000 IN.XC		
LREF =	327.7800 IN.	YMRP =	.0000 IN.YC		
BREF =	2348.0400 IN.	ZMRP =	190.8000 IN.ZC		
SCALE =	.0300				

PARAMETRIC DATA

ALPHAC =	8.000	BETAC =	.000
ELV-IB =	.000	ELV-OB =	3.000
ELEVON =	5.000	MACH =	.600
PHI =	7.500	DX =	.000
DY =	10.000	BETAO =	-5.000

RN/L = 3.25 GRADIENT INTERVAL = .00/ 12.00

ALPHAO = 10.000

DZ	DCN	DCA	DCLM	DCY	DCBL	DCYN	DCL	DCD	DCSL	DCLN
.000	-.10367	-.00240	.02423	-.01078	.00051	-.00423	-.10560	-.02124	-.00023	-.00426
3.000	-.10303	-.00312	.01252	-.01209	-.00024	-.00121	-.10092	-.02095	-.00045	-.00115
7.500	-.09660	-.00413	.00379	-.01239	-.00102	.00115	-.09442	-.02084	-.00081	.00131
15.000	-.08301	-.00514	-.00714	-.01035	-.00165	.00280	-.08285	-.01940	-.00114	.00304
30.000	-.05420	-.00648	-.00717	-.00002	-.00069	-.00042	-.05218	-.01751	-.00076	-.00029
45.000	-.04654	-.00699	-.00941	.00210	-.00074	-.00098	-.04671	-.01523	-.00090	-.00083
60.000	-.02000	.00027	-.01289	.00042	-.00124	-.00023	-.01975	-.00321	-.00126	-.00001
GRADIENT	.00159	-.00023	-.00266	-.00020	-.00020	.00070	.00161	.00005	-.00008	.00073

RN/L = 3.27 GRADIENT INTERVAL = .00/ 12.00

ALPHAO = 14.000

DZ	DCN	DCA	DCLM	DCY	DCBL	DCYN	DCL	DCD	DCSL	DCLN
.000	-.20103	-.00319	.13131	-.02585	.00286	-.00189	-.19742	-.03804	.00248	-.00235
3.000	-.19213	-.00329	.10855	-.02419	.00169	.00008	-.18354	.03661	.00187	-.00025
7.500	-.17349	-.00362	.07354	-.02360	.00081	.00351	-.17022	-.03370	.00141	.00332
15.000	-.14837	-.00451	.04014	-.02074	-.00058	.00578	-.14533	-.03021	.00043	.00579
30.000	-.10771	-.00573	.00810	-.01041	-.00088	.00428	-.10509	-.02434	-.00012	.00436
45.000	-.08126	-.00630	.00344	-.00012	.00000	-.00002	-.07893	-.02031	.00000	-.00002
60.000	-.06047	-.00485	-.00068	.00206	-.00016	-.00065	-.05871	-.01529	-.00028	-.00063
GRADIENT	.00371	-.00006	-.00770	.00029	-.00027	.00072	.00365	.00058	-.00014	.00076

CA20 (747/1 01 S1) - (747/1) O/S (100 - 036) (UGN100) (25 NOV 75)

REFERENCE DATA

SREF =	5500.0000 SQ.FT.	XMRP =	1339.9000 IN.XC
LREF =	327.7800 IN.	YMRP =	.0000 IN.YC
BREF =	2348.0400 IN.	ZMRP =	190.8000 IN.ZC
SCALE =	.0300		

PARAMETRIC DATA

ALPHAC =	4.000	BETAC =	5.000
ELV-IB =	.000	ELV-OB =	3.000
ELEVON =	5.000	MACH =	.600
PHI =	7.500	DX =	.000
DY =	10.000	BETAO =	-5.000

RN/L = 3.31 GRADIENT INTERVAL = .00/ 12.00

ALPHAO = 10.000

DZ	DCN	DCA	DCLM	DCY	DCBL	DCYN	DCL	DCD	DCSL	DCLN
.000	-.16239	.01073	.15549	-.02641	.00089	.00373	-.16262	-.00630	.00128	.00382
3.000	-.15292	.01263	.13961	-.02266	.00025	.00413	-.15340	-.00342	.00089	.00408
7.500	-.13952	.01404	.11197	-.01310	.00035	.00171	-.14032	-.00063	.00053	.00165
15.000	-.11899	.01390	.09041	-.00501	.00044	-.00011	-.11979	.00139	.00043	-.00016
30.000	-.09141	.01203	.05380	.00176	.00070	-.00095	-.09217	.00240	.00059	-.00101
45.000	-.07238	.01053	.03664	.00324	.00081	-.00091	-.07308	.00291	.00071	-.00093
60.000	-.05104	.00955	.01169	-.00161	.00049	.00092	-.05176	.00317	.00059	.00023
GRADIENT	.00303	.00043	-.00583	.00180	-.00008	-.00029	.00297	.00075	-.00009	-.00028

RN/L = 3.28 GRADIENT INTERVAL = .00/ 12.00

ALPHAO = 14.000

DZ	DCN	DCA	DCLM	DCY	DCBL	DCYN	DCL	DCD	DCSL	DCLN
.000	-.24243	.01144	.25984	-.04187	.00212	.00528	-.24230	-.01395	.00265	.00503
3.000	-.23253	.01107	.23486	-.03784	.00142	.00670	-.23242	-.01329	.00211	.00651
7.500	-.21627	.01145	.20121	-.03140	.00045	.00752	-.21629	-.01122	.00123	.00743
15.000	-.18557	.01369	.15547	-.02039	-.00019	.00553	-.18599	-.00578	.00040	.00562
30.000	-.13912	.01396	.09469	-.00590	.00040	.00172	-.13991	-.00065	.00059	.00167
45.000	-.10874	.01259	.06399	-.00193	.00051	.00108	-.10946	.00115	.00062	.00102
60.000	-.08721	.01128	.04525	.00046	.00052	.00033	-.08791	.00210	.00055	.00027
GRADIENT	.00350	.00001	-.00779	.00140	-.00022	.00029	.00348	.00037	-.00019	.00031

CA20 (747/1 01 S1) - (747/1) D/S (101 - 036) (UGN101) (25 NOV 75)

REFERENCE DATA

SREF = 5500.0000 SQ.FT. XMRP = 1339.9000 IN.XC
LREF = 327.7800 IN. YMRP = .0000 IN.YC
BREF = 2348.0400 IN. ZMRP = 190.8000 IN.ZC
SCALE = .0300

PARAMETRIC DATA

ALPHAC =	8.000	ETAC =	5.000
ELV-IB =	.000	ELV-OB =	3.000
ELEVON =	5.000	MACH =	.600
PHI =	7.500	DX =	.000
DY =	10.000	ETAO =	-5.000

RN/L = 3.25 GRADIENT INTERVAL = .00/ 12.00

ALPHAO = 10.000

DZ	DCN	DCA	DCLM	DCY	DCBL	DCYN	DCL	DCD	DCSL	DCLN
.000	-.11455	.00257	.03381	-.01796	.00181	-.00134	-.11336	-.01738	.00155	-.00163
3.000	-.11420	.00233	.02870	-.01265	.00168	-.00106	-.11295	-.01755	.00147	-.00134
7.500	-.11055	.00173	.02395	-.00755	.00147	-.00126	-.10946	-.01755	.00123	-.00150
15.000	-.10132	.00110	.01642	-.00131	.00166	-.00200	-.09997	-.01651	.00128	-.00225
30.000	-.08326	-.00022	.01166	.00218	.00135	-.00097	-.08196	-.01469	.00116	-.00119
45.000	-.06549	-.00114	.01020	.00535	.00152	-.00198	-.06528	-.01267	.00115	-.00222
60.000	-.04545	-.00157	.00928	.01037	.00175	-.00472	-.04448	-.00944	.00091	-.00495
GRADIENT	.00053	-.00011	-.00129	.00137	-.00004	.00001	.00054	-.00002	-.00004	.00001

RN/L = 3.27 GRADIENT INTERVAL = .00/ 12.00

ALPHAO = 14.000

DZ	DCN	DCA	DCLM	DCY	DCBL	DCYN	DCL	DCD	DCSL	DCLN
.000	-.19431	-.00405	.11381	-.03920	-.00004	.00348	-.19065	-.03774	.00057	.00344
3.000	-.18930	-.00225	.10122	-.03263	-.00072	.00375	-.18494	-.03550	-.00006	.00332
7.500	-.17493	-.00176	.07878	-.02405	-.00135	.00253	-.17197	-.03211	-.00070	.00391
15.000	-.15541	-.00164	.05424	-.01212	-.00117	.00123	-.15276	-.02860	-.00094	.00141
30.000	-.12609	-.00094	.03488	-.00108	.00061	-.00097	-.12401	-.02222	.00044	-.00106
45.000	-.10236	-.00126	.02763	.00260	.00139	-.00113	-.10058	-.01901	.00118	-.00135
60.000	-.08193	-.00157	.01889	.00482	.00161	-.00183	-.08041	-.01577	.00127	-.00208
GRADIENT	.00261	.00030	-.00470	.00201	-.00017	.00002	.00252	.00075	-.00017	.00005

ORIGINAL PAGE IS
OF POOR QUALITY

DATE 04 DEC 75 TABULATED SOURCE DATA - CA20

CA20 (747/1 01 S1) - (747/1) O/S (104 - 034) (UGN104) (25 NOV 75)

REFERENCE DATA

SREF =	5500.0000 SQ.FT.	XMRP =	1339.9000 IN.XC
LREF =	327.7800 IN.	YMRP =	.0000 IN.YC
BREF =	2348.0400 IN.	ZMRP =	190.8000 IN.ZC
SCALE =	.0300		

PARAMETRIC DATA

ALPHAC =	4.000	BETAC =	-5.000
ELV-IB =	.000	ELV-OB =	3.000
ELEVON =	5.000	MACH =	.600
PHI =	.000	DX =	10.000
DY =	.000	BETAO =	-5.000

RN/L = 3.30 GRADIENT INTERVAL = .00/ 12.00

ALPHAO = 10.000

DZ	DCN	DCA	DCLM	DCY	DCBL	DCYN	DCL	DCD	DCSL	DCLN
.000	-.13118	.01052	.13889	.01895	-.00311	.00031	-.13156	-.00325	-.00306	.00063
3.000	-.13255	.01092	.14161	.01993	-.00176	-.00327	-.13297	-.00300	-.00209	-.00306
7.500	-.12028	.01137	.11145	.01443	-.00163	-.00196	-.12081	-.00126	-.00168	-.00177
15.000	-.10555	.01129	.08381	.01240	-.00133	-.00227	-.10515	.00020	-.00155	-.00212
30.000	-.08274	.00955	.05563	.01001	-.00061	-.00257	-.08329	.00095	-.00088	-.00249
45.000	-.06621	.00853	.03920	.00976	.00007	-.00303	-.06674	.00157	-.00025	-.00302
60.000	-.04818	.00724	.02081	.00977	.00084	-.00374	-.04869	.00217	.00045	-.00330
GRADIENT	.00155	.00011	-.00390	-.00065	.00018	-.00026	.00153	.00027	.00015	-.00027

RN/L = 3.28 GRADIENT INTERVAL = .00/ 12.00

ALPHAO = 14.000

DZ	DCN	DCA	DCLM	DCY	DCBL	DCYN	DCL	DCD	DCSL	DCLN
.000	-.20587	.00851	.27214	.00815	-.00583	.00695	-.20564	-.01306	-.00507	.00752
3.000	-.20168	.00862	.25788	.01696	-.00341	-.00073	-.20147	-.01251	-.00347	-.00937
7.500	-.18840	.00991	.22557	.01602	-.00198	-.00259	-.18840	-.00983	-.00224	-.00237
15.000	-.16275	.01151	.16906	.01085	-.00140	-.00151	-.16306	-.00556	-.00155	-.00135
30.000	-.12555	.01167	.10475	.00350	-.00184	.00102	-.12609	-.00152	-.00173	.00120
45.000	-.09946	.01026	.07281	.00822	-.00034	-.00238	-.09999	-.00019	-.00059	-.00233
60.000	-.08184	.00911	.05278	.00831	.00007	-.00288	-.08234	.00050	-.00024	-.00297
GRADIENT	.00238	.00020	-.00629	.00095	.00050	-.00120	.00235	.00044	.00037	-.00125

CA20 (747/1 01 51) - (747/1) D/S (105 - 034) (UGN105) (25 NOV 75)

REFERENCE DATA

SREF =	5500.0000 SQ.FT.	XMRP =	1339.9000 IN.XC
LREF =	327.7800 IN.	YMRP =	.0000 IN.YC
BREF =	2348.0400 IN.	ZMRP =	190.8000 IN.ZC
SCALE =	.0300		

PARAMETRIC DATA

ALPHAC =	8.000	BETAC =	-5.000
ELV-IB =	.000	ELV-OB =	3.000
ELEVON =	5.000	MACH =	.600
PHI =	.000	DX =	10.000
DY =	.000	BETAO =	-5.000

RN/L = 3.26 GRADIENT INTERVAL = .00/ 12.00

ALPHAO = 10.000

DZ	DCN	DCA	DCLM	DCY	DCBL	DCYN	DCL	DCD	DCSL	DCLN
.000	-.09465	-.00206	.00678	.01485	-.00242	.00050	-.09285	-.01847	-.00229	.00091
3.000	-.09394	-.00241	.00389	.01162	-.00181	-.00014	-.09209	-.01869	-.00181	.00018
7.500	-.08961	-.00246	-.00092	.00631	-.00209	.00148	-.08782	-.01799	-.00160	.00182
15.000	-.08307	-.00325	.00353	.00365	-.00166	.00111	-.08125	-.01783	-.00144	.00133
30.000	-.06569	-.00507	-.00328	.00665	.00018	-.00143	-.06380	-.01640	-.00007	-.00144
45.000	-.05212	-.00561	.00063	.00390	.00051	-.00043	-.05035	-.01457	.00043	-.00051
60.000	-.03618	-.00665	-.00197	.00372	.00149	-.00086	-.03447	-.01283	.00132	-.00111
GRADIENT	.00070	-.00005	-.00103	-.00114	.00004	.00015	.00069	.00007	.00006	.00014

RN/L = 3.32 GRADIENT INTERVAL = .00/ 12.00

ALPHAO = 14.000

DZ	DCN	DCA	DCLM	DCY	DCBL	DCYN	DCL	DCD	DCSL	DCLN
.000	-.16374	-.00284	.12320	.02527	-.00291	-.00226	-.16076	-.03123	-.00326	-.00172
3.000	-.16127	-.00233	.10974	.02294	-.00165	-.00437	-.15841	-.03029	-.00239	-.00401
7.500	-.14848	-.00210	.08455	.01602	-.00153	-.00267	-.14586	-.02785	-.00197	-.00237
15.000	-.13299	-.00249	.05923	.01057	-.00115	-.00143	-.13054	-.02554	-.00138	-.00120
30.000	-.10709	-.00408	.03189	.00740	.00003	-.00130	-.10476	-.02261	-.00020	-.00129
45.000	-.08622	-.00492	.02040	.00537	.00052	-.00101	-.08406	-.01932	.00033	-.00109
60.000	-.06928	-.00559	.01177	.00439	.00104	-.00081	-.05725	-.01754	.00098	-.00093
GRADIENT	.00210	.00010	-.00519	-.00126	.00017	-.00002	.00205	.00046	.00017	-.00005

CA20 (747/1 01 S1) - (747/1) D/S (106 - 034) (UGN106) (25 NOV 75)

REFERENCE DATA

SREF = 5500.0000 SQ.FT. XMRP = 1339.9000 IN.XC
LREF = 327.7800 IN. YMRP = .0000 IN.YC
BREF = 2348.0400 IN. ZMRP = 190.8000 IN.ZC
SCALE = .0300

PARAMETRIC DATA

ALPHAC =	4.000	BETAC =	-5.000
ELV-IB =	.000	ELV-OB =	3.000
ELEVON =	5.000	MACH =	.600
PHI =	.000	DX =	.000
DY =	10.000	BETAO =	-5.000

RUN NO. 0/ 0 RN/L = 3.31 GRADIENT INTERVAL = .00/ 12.00

ALPHAO	DZ	DCN	DCA	DCLM	DCY	DCBL	DCYN	DCL	DCD	DCSL	DCLN
10.000	.000	-.17171	.01479	.08998	-.00830	.00523	.00076	-.17232	-.00324	.00529	.00021
10.000	3.000	-.16594	.01447	.09619	-.00726	.00509	.00008	-.16555	-.00295	.00507	-.00046
10.000	7.500	-.15416	.01411	.08948	-.00645	.00420	.00030	-.15479	-.00208	.00421	-.00014
10.000	15.000	-.13370	.01329	.07494	-.00809	.00255	.00204	-.13435	-.00075	.00275	.00177
10.000	30.000	-.10584	.01126	.05496	-.00568	.00123	.00226	-.10644	.00013	.00148	.00212
10.000	45.000	-.08661	.00911	.04333	-.00275	.00058	.00149	-.08708	.00001	.00074	.00142
10.000	60.000	-.06755	.00712	.03071	.00005	-.00009	.00080	-.06792	.00002	-.00001	.00081
	GRADIENT	.00236	-.00009	-.00018	.00024	-.00014	-.00005	.00236	.00016	-.00015	-.00004

CA20 (747/1 01 S1) - (747/1) D/S (107 - 034) (UGN107) (25 NOV 75)

REFERENCE DATA

SREF = 5500.0000 SQ.FT. XMRP = 1339.9000 IN.XC
LREF = 327.7800 IN. YMRP = .0000 IN.YC
BREF = 2348.0400 IN. ZMRP = 190.8000 IN.ZC
SCALE = .0300

PARAMETRIC DATA

ALPHAC =	4.000	BETAC =	-5.000
ELV-IB =	.000	ELV-OB =	3.000
ELEVON =	5.000	MACH =	.600
PHI =	.000	DX =	10.000
DY =	10.000	BETAO =	-5.000

RN/L = 3.25 GRADIENT INTERVAL = .00/ 12.00

ALPHAO = 10.000

DZ	DCN	DCA	DCLM	DCY	DCBL	DCYN	DCL	DCD	DCSL	DCLN
.000	.24766	-.02955	-.01150	-.22106	-.03137	.04138	.24105	.05299	-.02526	.04524
3.000	.24803	-.02979	-.01660	-.21574	-.03149	.04166	.24146	.05281	-.02533	.04553
7.500	.25146	-.03039	-.02135	-.21065	-.03171	.04146	.24495	.05281	-.02557	.04538
15.000	.26099	-.03102	-.02889	-.20441	-.03152	.04073	.25444	.05384	-.02569	.04462
30.000	.27905	-.03234	-.03365	-.20092	-.03183	.04176	.27245	.05569	-.02555	.04559
45.000	.29592	-.03327	-.03511	-.19774	-.03166	.04074	.28913	.05769	-.02566	.04465
60.000	.31686	-.03370	-.04103	-.19273	-.03143	.03800	.30993	.06092	-.02590	.04192
GRADIENT	.00053	-.00011	-.00129	.00137	-.00004	.00001	.00054	-.00002	-.00004	.00001

DATE 04 DEC 75 TABULATED SOURCE DATA - CA20

CA20 (747/1 01 S1) - (747/1) D/S (107 - 034) (UGN107) (25 NOV 75)

REFERENCE DATA

SREF =	5500.0000 SQ.FT.	XMRP =	1339.9000 IN.XC
LREF =	327.7800 IN.	YMRP =	.0000 IN.YC
BREF =	2348.0400 IN.	ZMRP =	190.8000 IN.ZC
SCALE =	.0300		

PARAMETRIC DATA

ALPHAC =	4.000	BETAC =	-5.000
ELV-IB =	.000	ELV-OB =	3.000
ELEVON =	5.000	MACH =	.600
PHI =	.000	DX =	10.000
DY =	10.000	BETAO =	-5.000

RN/L = 3.27 GRADIENT INTERVAL = .00/ 12.00

ALPHAO = 14.000

DZ	DCN	DCA	DCLM	DCY	DCBL	DCYN	DCL	DCD	DCSL	DCLN
.000	.16380	-.03618	.06851	-.24230	-.03321	.04621	.16376	.03262	-.02623	.05031
3.000	.17401	-.03497	.05591	-.23573	-.03390	.04648	.16947	.03486	-.02687	.05070
7.500	.18738	-.03388	.03347	-.22715	-.03453	.04636	.18244	.03925	-.02750	.05059
15.000	.20650	-.03376	.00893	-.21522	-.03435	.04385	.20164	.04175	-.02774	.04829
30.000	.23322	-.03306	-.01042	-.20418	-.03256	.04176	.23040	.04753	-.02637	.04591
45.000	.25995	-.03338	-.01768	-.20059	-.03178	.04159	.25393	.05134	-.02563	.04552
60.000	.28039	-.03359	-.02642	-.19828	-.03157	.04089	.27400	.05459	-.02554	.04479
GRADIENT	.00261	.00030	-.00470	.00201	-.00017	.00002	.00252	.00075	-.00017	.00005

CA20 (747/1 01 S1) - (747/1) D/S (108 - 034) (UGN108) (25 NOV 75)

REFERENCE DATA

SREF =	5500.0000 SQ.FT.	XMRP =	1339.9000 IN.XC
LREF =	327.7800 IN.	YMRP =	.0000 IN.YC
BREF =	2348.0400 IN.	ZMRP =	190.8000 IN.ZC
SCALE =	.0300		

PARAMETRIC DATA

ALPHAC =	8.000	BETAC =	-5.000
ELV-IB =	.000	ELV-OB =	3.000
ELEVON =	5.000	MACH =	.600
PHI =	.000	DX =	10.000
DY =	10.000	BETAO =	-5.000

RN/L = 3.24 GRADIENT INTERVAL = .00/ 12.00

ALPHAO = 10.000

DZ	DCN	DCA	DCLM	DCY	DCBL	DCYN	DCL	DCD	DCSL	DCLN
.000	-.09483	-.00029	-.00965	-.00617	-.00058	.00246	-.09334	-.01675	-.00012	.00252
3.000	-.09445	-.00067	-.00532	-.00555	.00010	.00177	-.09290	-.01706	.00041	.00172
7.500	-.09021	-.00097	-.00416	-.00558	.00019	.00224	-.08857	-.01662	.00059	.00217
15.000	-.08217	-.00205	-.00078	-.00461	.00039	.00221	-.08057	-.01629	.00077	.00211
30.000	-.06726	-.00323	-.00244	-.00136	.00093	.00097	-.06557	-.01485	.00109	.00079
45.000	-.05324	-.00475	.00110	-.00051	.00107	.00113	-.05161	-.01392	.00125	.00093
60.000	-.03852	-.00620	.00181	.00139	.00146	.00070	-.03685	-.01280	.00155	.00043
GRADIENT	.00054	-.00009	.00059	.00007	.00009	-.00002	.00065	.00002	.00009	-.00003

CA20 (747/1 01 S1) - (747/1) D/S (108 - 034) (UGN108) (25 NOV 75)

REFERENCE DATA

SREF =	5500.0000 SQ.FT.	XMRP =	1339.9000 IN.XC
LREF =	327.7800 IN.	YMRP =	.0000 IN.YC
BREF =	2348.0400 IN.	ZMRP =	190.8000 IN.ZC
SCALE =	.0300		

PARAMETRIC DATA

ALPHAC =	8.000	BETAC =	-5.000
ELV-IB =	.000	ELV-OB =	3.000
ELEVON =	5.000	MACH =	.600
PHI =	.000	DX =	10.000
DY =	10.000	BETAO =	-5.000

RN/L = 3.26 GRADIENT INTERVAL = .00/ 12.00

ALPHAO = 14.000

DZ	DCN	DCA	DCLM	DCY	DCBL	DCYN	DCL	DCD	DCSL	DCLN
.000	-.16624	.00029	.08752	-.00777	.00282	.00034	-.16376	-.02859	.00284	-.00015
3.000	-.16183	.00053	.08177	-.00724	.00285	.00019	-.15946	-.02758	.00284	-.00031
7.500	-.15088	-.00007	.06648	-.00704	.00258	.00072	-.14857	-.02627	.00267	.00026
15.000	-.13404	-.00006	.04783	-.01207	.00121	.00466	-.13199	-.02333	.00200	.00438
30.000	-.10764	-.00147	.03297	-.00953	.00078	.00465	-.10575	-.02014	.00157	.00445
45.000	-.08658	-.00306	.02023	-.00407	.00118	.00258	-.08473	-.01805	.00161	.00233
60.000	-.06996	-.00427	.01474	-.00112	.00122	.00127	-.06816	-.01635	.00142	.00104
GRADIENT	.00208	-.00005	-.00285	.00009	-.00003	.00006	.00206	.00031	-.00002	.00005

CA20 (747/1 01 S1) - (747/1) D/S (109 - 035) (UGN109) (25 NOV 75)

REFERENCE DATA

SREF =	5500.0000 SQ.FT.	XMRP =	1339.9000 IN.XC
LREF =	327.7800 IN.	YMRP =	.0000 IN.YC
BREF =	2348.0400 IN.	ZMRP =	190.8000 IN.ZC
SCALE =	.0300		

PARAMETRIC DATA

ALPHAC =	4.000	BETAC =	.000
ELV-IB =	.000	ELV-OB =	3.000
ELEVON =	5.000	MACH =	.600
PHI =	.000	DX =	10.000
DY =	.000	BETAO =	-5.000

RN/L = 3.27 GRADIENT INTERVAL = .00/ 12.00

ALPHAO = 10.000

DZ	DCN	DCA	DCLM	DCY	DCBL	DCYN	DCL	DCD	DCSL	DCLN
.000	-.13961	.01120	.14099	-.00455	-.00442	.00365	-.14002	-.00345	-.00401	.00409
3.000	-.13636	.01198	.13927	-.00268	-.00392	.00340	-.13686	-.00234	-.00354	.00379
7.500	-.12468	.01225	.11773	.00183	-.00300	.00108	-.12528	-.00065	-.00287	.00139
15.000	-.10807	.01188	.08891	.00717	-.00177	-.00200	-.10872	.00052	-.00197	-.00181
30.000	-.09245	.01027	.05798	.00824	-.00080	-.00280	-.09308	.00159	-.00108	-.00270
45.000	-.06671	.00918	.04086	.00789	-.00008	-.00291	-.06731	.00215	-.00039	-.00289
60.000	-.04902	.00800	.02128	.00740	.00061	-.00293	-.04959	.00283	.00030	-.00288
GRADIENT	.00204	.00013	-.00323	.00086	.00019	-.00036	.00201	.00035	.00015	-.00037

CA20 (747/1 01 S1) - (747/1) D/S (109 - 035) (UGN109) (25 NOV 75)

REFERENCE DATA

SREF = 5500.0000 SQ.FT. XMRP = 1339.9000 IN.XC
LREF = 327.7800 IN. YMRP = .0000 IN.YC
BREF = 2348.0400 IN. ZMRP = 190.8000 IN.ZC
SCALE = .0300

PARAMETRIC DATA

ALPHAC =	4.000	BETAC =	.000
ELV-IB =	.000	ELV-OB =	3.000
ELEVON =	5.000	MACH =	.600
PHI =	.000	DX =	10.000
DY =	.000	BETAO =	-5.000

RN/L = 3.28 GRADIENT INTERVAL = .00/ 12.00

ALPHAO = 14.000

DZ	DCN	DCA	DCLM	DCY	DCBL	DCYN	DCL	DCD	DCSL	DCLN
.000	-.21145	.00627	.27154	-.00921	-.00631	.00660	-.21095	-.01586	-.00558	.00722
3.000	-.20728	.00742	.26356	-.00484	-.00528	.00492	-.20692	-.01429	-.00474	.00544
7.500	-.19306	.00950	.23428	.00010	-.00410	.00262	-.19299	-.01073	-.00381	.00304
15.000	-.16948	.01131	.17452	.00702	-.00230	-.00139	-.16476	-.00595	-.00243	-.00113
30.000	-.12483	.01125	.10805	.01053	-.00054	-.00389	-.12532	-.00186	-.00104	-.00380
45.000	-.09844	.01006	.07734	.00843	-.00018	-.00307	-.09895	-.00028	-.00050	-.00304
60.000	-.08112	.00910	.05772	.00682	.00017	-.00250	-.08163	.00057	-.00010	-.00250
GRADIENT	.00251	.00043	-.00509	.00123	.00029	-.00053	.00245	.00069	.00023	-.00055

CA20 (747/1 01 S1) - (747/1) D/S (110 - 035) (UGN110) (25 NOV 75)

REFERENCE DATA

SREF = 5500.0000 SQ.FT. XMRP = 1339.9000 IN.XC
LREF = 327.7800 IN. YMRP = .0000 IN.YC
BREF = 2348.0400 IN. ZMRP = 190.8000 IN.ZC
SCALE = .0300

PARAMETRIC DATA

ALPHAC =	8.000	BETAC =	.000
ELV-IB =	.000	ELV-OB =	3.000
ELEVON =	5.000	MACH =	.600
PHI =	.000	DX =	10.000
DY =	.000	BETAO =	-5.000

RN/L = 3.28 GRADIENT INTERVAL = .00/ 12.00

ALPHAO = 10.000

DZ	DCN	DCA	DCLM	DCY	DCBL	DCYN	DCL	DCD	DCSL	DCLN
.000	-.08538	-.00503	-.01620	.00254	-.00265	-.00127	-.08321	-.01978	-.00283	-.00079
3.000	-.08389	-.00540	-.01354	.00474	-.00218	-.00182	-.08168	-.01993	-.00246	-.00141
7.500	-.07780	-.00603	-.01571	.00660	-.00154	-.00240	-.07558	-.01945	-.00193	-.00209
15.000	-.06796	-.00730	-.01634	.00886	-.00083	-.00315	-.06566	-.01899	-.00136	-.00295
30.000	-.05402	-.00807	-.01288	.00855	-.00037	-.00316	-.05160	-.01722	-.00092	-.00305
45.000	-.04319	-.00809	-.00912	.00881	.00030	-.00333	-.04113	-.01547	-.00029	-.00339
60.000	-.03112	-.00830	-.00534	.00868	.00097	-.00347	-.02921	-.01358	.00025	-.00357
GRADIENT	.00104	-.00013	.00002	.00053	.00015	-.00015	.00104	.00005	.00012	-.00017

ORIGINAL PAGE IS
OF POOR QUALITY

CA20 (747/1 01 S1) - (747/1) D/S (110 - 035) (UGN110) (25 NOV 75)

REFERENCE DATA

SREF = 5500.0000 SQ.FT. XMRP = 1339.9000 IN.XC
LREF = 327.7800 IN. YMRP = .0000 IN.YC
BREF = 2348.0400 IN. ZMRP = 190.8000 IN.ZC
SCALE = .0300

PARAMETRIC DATA

ALPHAC =	8.000	BETAC =	.000
ELV-IB =	.000	ELV-OB =	3.000
ELEVON =	5.000	MACH =	.600
PHI =	.000	DX =	10.000
DY =	.000	BETAO =	-5.000

RN/L = 3.29 GRADIENT INTERVAL = .00/ 12.00

ALPHAO = 14.000

DZ	DCN	DCA	DCLM	DCY	DCBL	DCYN	DCL	DCD	DCSL	DCLN
.000	-.15211	-.00557	.09019	-.00322	-.00435	.00211	-.14883	-.03190	-.00392	.00283
3.000	-.14480	-.00524	.07882	-.00100	-.00364	.00172	-.14169	-.03030	-.00329	.00233
7.500	-.13336	-.00591	.06036	.00734	-.00251	-.00217	-.13031	-.02893	-.00265	-.00170
15.000	-.11744	-.00677	.03615	.01100	-.00140	-.00397	-.11448	-.02706	-.00207	-.00357
30.000	-.09177	-.00819	.01413	.01079	-.00074	-.00459	-.08895	-.02400	-.00152	-.00439
45.000	-.07187	-.00862	.00630	.00793	-.00044	-.00305	-.06928	-.02097	-.00097	-.00293
60.000	-.05697	-.00886	.00053	.00573	-.00023	-.00235	-.05457	-.01862	-.00062	-.00228
GRADIENT	.00250	-.00005	-.00399	.00144	.00025	-.00059	.00247	.00038	.00014	-.00063

CA20 (747/1 01 S1) - (747/1) D/S (111 - 035) (UGN111) (25 NOV 75)

REFERENCE DATA

SREF = 5500.0000 SQ.FT. XMRP = 1339.9000 IN.XC
LREF = 327.7800 IN. YMRP = .0000 IN.YC
BREF = 2348.0400 IN. ZMRP = 190.8000 IN.ZC
SCALE = .0300

PARAMETRIC DATA

ALPHAC =	4.000	BETAC =	.000
ELV-IB =	.000	ELV-OB =	3.000
ELEVON =	5.000	MACH =	.600
PHI =	.000	DX =	.000
DY =	10.000	BETAO =	-5.000

RUN NO. 0/ 0 RN/L = 3.33 GRADIENT INTERVAL = .00/ 12.00

ALPHAO	DZ	DCN	DCA	DCLM	DCY	DCBL	DCYN	DCL	DCD	DCSL	DCLN
10.000	.000	-.18993	.01374	.17828	-.00588	.00682	-.00716	-.19033	-.00619	.00604	-.00783
10.000	3.000	-.17987	.01398	.16283	-.00581	.00574	-.00494	-.18034	-.00490	.00519	-.00552
10.000	7.500	-.16439	.01385	.13895	-.00770	.00384	-.00160	-.16494	-.00341	.00355	-.00193
10.000	15.000	-.14107	.01266	.10424	-.00996	.00201	.00203	-.14162	-.00215	.00221	.00181
10.000	30.000	-.10859	.01091	.06779	-.00556	.00085	.00215	-.10914	-.00059	.00107	.00205
10.000	45.000	-.08844	.00902	.04876	-.00149	.00065	.00089	-.08890	-.00027	.00074	.00082
10.000	60.000	-.06826	.00729	.02855	.00253	.00044	-.00030	-.06855	.00012	.00041	-.00034
	GRADIENT	.00341	.00001	-.00525	-.00026	-.00040	.00074	.00339	.00037	-.00032	.00078

CA20 (747/1 01 S1) - (747/1) D/5 (112 - 035) (UGN112) (25 NOV 75)

REFERENCE DATA

SREF =	5500.0000 SQ.FT.	XMRP =	1339.9000 IN.XC
LREF =	327.7800 IN.	YMRP =	.0000 IN.YC
BREF =	2348.0400 IN.	ZMRP =	190.8000 IN.ZC
SCALE =	.0300		

PARAMETRIC DATA

ALPHAC =	4.000	BETAC =	.000
ELV-IB =	.000	ELV-OB =	3.000
ELEVON =	5.000	MACH =	.600
PHI =	.000	DX =	10.000
DY =	10.000	BETAO =	-5.000

RN/L = 3.28 GRADIENT INTERVAL = .00/ 12.00

ALPHAO = 10.000

DZ	DCN	DCA	DCLM	DCY	DCBL	DCYN	DCL	DCD	DCSL	DCLN
.000	-.15581	.01155	.15569	-.00183	.00471	-.00619	-.15716	-.00490	.00403	-.00554
3.000	-.15209	.01170	.15121	-.00157	.00384	-.00486	-.15247	-.00426	.00331	-.00524
7.500	-.13850	.01148	.12386	-.00389	.00256	-.00170	-.13894	-.00306	.00236	-.00196
15.000	-.12161	.01053	.09512	-.00607	.00122	.00113	-.12205	-.00224	.00133	.00100
30.000	-.09512	.00923	.06095	-.00222	.00068	.00074	-.09556	-.00077	.00075	.00067
45.000	-.07966	.00787	.04188	-.00058	.00057	.00040	-.08005	-.00050	.00061	.00033
60.000	-.06203	.00670	.01976	.00163	.00052	-.00012	-.06319	.00009	.00051	-.00017
GRADIENT	.00249	-.00001	-.00439	-.00029	-.00029	.00061	.00248	.00025	-.00022	.00063

RN/L = 3.24 GRADIENT INTERVAL = .00/ 12.00

ALPHAO = 14.000

DZ	DCN	DCA	DCLM	DCY	DCBL	DCYN	DCL	DCD	DCSL	DCLN
.000	-.21401	.00709	.28827	-.00700	.00770	-.00877	-.21358	-.01532	.00674	-.00953
3.000	-.20714	.00825	.27226	-.00695	.00702	-.00665	-.20687	-.01345	.00629	-.00729
7.500	-.19246	.00993	.23978	-.01004	.00531	-.00211	-.19244	-.01024	.00586	-.00265
15.000	-.16483	.01100	.17222	-.01272	.00301	.00218	-.16507	-.00628	.00323	.00185
30.000	-.12339	.01061	.10819	-.01431	.00009	.00609	-.12432	-.00240	.00073	.00505
45.000	-.09720	.00977	.07878	-.00594	.00063	.00272	-.09769	-.00044	.00091	.00264
60.000	-.07224	.00880	.05589	-.00194	.00059	.00106	-.07873	.00059	.00080	.00093
GRADIENT	.00291	.00038	-.00657	-.00043	-.00032	.00090	.00285	.00068	-.00023	.00093

CA20 (747/1 01 S1) - (747/1) D/S (113 - 035) (UGN113) (25 NOV 75)

REFERENCE DATA

SREF = 5500.0000 SQ.FT. XMRP = 1339.9000 IN.XC
LREF = 327.7800 IN. YMRP = .0000 IN.YC
BREF = 2348.0400 IN. ZMRP = 190.8000 IN.ZC
SCALE = .0300

PARAMETRIC DATA

ALPHAC =	8.000	BETAC =	.000
ELV-IB =	.000	ELV-OB =	3.000
ELEVON =	5.000	MACH =	.600
PHI =	.000	DX =	.000
DY =	10.000	BETAO =	-5.000

RUN NO. 01 0 RN/L = 3.26 GRADIENT INTERVAL = .00/ 12.00

ALPHAO	DZ	DCN	DCA	DCLM	DCY	DCBL	DCYN	DCL	DCD	DCSL	DCLN
14.000	.000	-.21753	-.00217	.13044	-.01662	.00766	-.00770	-.21395	-.03991	.00620	-.00891
14.000	3.000	-.20806	-.00239	.11333	-.01775	.00614	-.00345	-.20448	-.03848	.00544	-.00447
14.000	7.500	-.18982	-.00363	.08470	-.01721	.00425	-.00028	-.18631	-.03554	.00413	-.00102
14.000	15.000	-.16479	-.00496	.05143	-.01811	.00190	.00325	-.16143	-.03350	.00254	.00347
14.000	30.000	-.12878	-.00671	.01872	-.01267	.00012	.00461	-.12565	-.02897	.00092	.00452
14.000	45.000	-.10517	-.00736	.01139	-.00576	.00007	.00198	-.10230	-.02551	.00041	.00193
14.000	60.000	-.08932	-.00748	.00498	-.00219	.00004	.00085	-.08657	-.02268	.00019	.00084
	GRADIENT	.00372	-.00020	-.00512	-.00006	-.00045	.00097	.00370	.00045	-.00023	.00103

CA20 (747/1 01 S1) - (747/1) D/S (114 - 035 (UGN114) (25 NOV 75)

REFERENCE DATA

SREF = 5500.0000 SQ.FT. XMRP = 1339.9000 IN.XC
LREF = 327.7800 IN. YMRP = .0000 IN.YC
BREF = 2348.0400 IN. ZMRP = 190.8000 IN.ZC
SCALE = .0300

PARAMETRIC DATA

ALPHAC =	8.000	BETAC =	.000
ELV-IB =	.000	ELV-OB =	3.000
ELEVON =	5.000	MACH =	.600
PHI =	.000	DX =	10.000
DY =	10.000	BETAO =	-5.000

RN/L = 3.24 GRADIENT INTERVAL = .00/ 12.00

ALPHAO = 10.000

DZ	DCN	DCA	DCLM	DCY	DCBL	DCYN	DCL	DCD	DCSL	DCLN
.000	-.08355	-.00484	.00038	-.00450	.00118	-.00441	-.08144	-.01927	.00040	-.00455
3.000	-.08220	-.00535	-.00234	-.00508	.00084	-.00260	-.08002	-.01955	.00037	-.00271
7.500	-.07725	-.00609	-.00695	-.00567	.00032	-.00067	-.07502	-.01941	.00020	-.00072
15.000	-.06745	-.00719	-.01167	-.00561	-.00030	.00143	-.06518	-.01879	-.00004	.00146
30.000	-.05443	-.00783	-.01112	.00109	.00043	-.00104	-.05225	-.01716	.00025	-.00110
45.000	-.04221	-.00793	-.00781	.00247	.00015	-.00081	-.04019	-.01514	.00001	-.00083
60.000	-.02948	-.00814	-.00469	.00530	.00033	-.00200	-.02762	-.01313	-.00002	-.00202
GRADIENT	.00086	-.00017	-.00099	-.00015	-.00012	.00049	.00088	-.00001	-.00003	.00051

CA20 (747/1 01 SI) - (747/1) D/S (114 - 035 (UGN114) (25 NOV 75)

REFERENCE DATA

SREF =	5500.0000 SQ.FT.	XMRP =	1339.9000 IN.XC
LREF =	327.7800 IN.	YMRP =	.0000 IN.YC
BREF =	2348.0400 IN.	ZMRP =	190.8000 IN.ZC
SCALE =	.0300		

PARAMETRIC DATA

ALPHAC =	8.000	BETAC =	.000
ELV-IB =	.000	ELV-OB =	3.000
ELEVON =	5.000	MACH =	.600
PHI =	.000	DX =	10.000
DY =	10.000	BETAO =	-5.000

RN/L = 3.22 GRADIENT INTERVAL = .00/ 12.00

ALPHAO = 14.000

DZ	DCN	DCA	DCLM	DCY	DCBL	DCYN	DCL	DCD	DCSL	DCLN
.000	-.15311	-.00578	.12515	-.00891	.00499	-.00731	-.14978	-.03228	.00355	-.00606
3.000	-.14756	-.00555	.11614	-.01224	.00340	-.00292	-.14436	-.03109	.00285	-.00547
7.500	-.13979	-.00664	.08535	-.01472	.00203	.00079	-.13154	-.02993	.00213	-.00492
15.000	-.11539	-.00776	.05486	-.01530	.00050	.00407	-.11229	-.02768	.00120	-.00392
30.000	-.08619	-.00887	.02048	-.00800	.00006	.00281	-.08334	-.02370	.00054	-.00276
45.000	-.06918	-.00850	.01473	-.00399	-.00004	.00147	-.06569	-.02051	.00022	-.00145
60.000	-.05439	-.00665	.00647	-.00171	-.00015	.00079	-.05205	-.01795	-.00001	.00080
GRADIENT	.00248	-.00012	-.00543	-.00076	-.00039	.00106	.00247	.00031	-.00020	.00111

CA20 (747/1 01 SI) - (747/1) D/S (115 - 036) (UGN115) (25 NOV 75)

REFERENCE DATA

SREF =	5500.0000 SQ.FT.	XMRP =	1339.9000 IN.XC
LREF =	327.7800 IN.	YMRP =	.0000 IN.YC
BREF =	2348.0400 IN.	ZMRP =	190.8000 IN.ZC
SCALE =	.0300		

PARAMETRIC DATA

ALPHAC =	4.000	BETAC =	5.000
ELV-IB =	.000	ELV-OB =	3.000
ELEVON =	5.000	MACH =	.600
PHI =	.000	DX =	10.000
DY =	.000	BETAO =	-5.000

RN/L = 3.26 GRADIENT INTERVAL = .00/ 12.00

ALPHAO = 10.000

DZ	DCN	DCA	DCLM	DCY	DCBL	DCYN	DCL	DCD	DCSL	DCLN
.000	-.11933	.00988	.08840	-.01408	-.00364	.00173	-.11971	-.00264	-.00344	.00210
3.000	-.11824	.01057	.07044	-.01005	-.00380	.00238	-.11869	-.00165	-.00354	.00276
7.500	-.11345	.01144	.06356	-.00358	-.00310	.00091	-.11204	-.00028	-.00299	.00123
15.000	-.09941	.01193	.05493	.00640	-.00155	-.00273	-.10011	.00147	-.00183	-.00256
30.000	-.08035	.01093	.04488	.01259	.00020	-.00549	-.09105	.00247	-.00038	-.00549
45.000	-.06490	.00959	.03355	.00841	.00029	-.00328	-.08654	.00276	-.00005	-.00329
60.000	-.04863	.00826	.02215	.00512	.00061	-.00155	-.04923	.00313	.00045	-.00160
GRADIENT	.00109	.00021	-.00072	.00140	.00008	-.00013	.00105	.00032	.00007	-.00013

CA20 (747/1 01 S1) - (747/1) D/S (115 - 036) (UGN115) (25 NOV 75)

REFERENCE DATA

SREF =	5500.0000 SQ.FT.	XMRP =	1339.9000 IN.XC		
LREF =	327.7800 IN.	YMRP =	.0000 IN.YC		
BREF =	2348.0400 IN.	ZMRP =	190.8000 IN.ZC		
SCALE =	.0300				

PARAMETRIC DATA

ALPHAC =	4.000	BETAC =	5.000
ELV-IB =	.000	ELV-OB =	3.000
ELEVON =	5.000	MACH =	.600
PHI =	.000	DX =	10.000
DY =	.000	BETAO =	-5.000

RN/L = 3.27 GRADIENT INTERVAL = .00/ 12.00

ALPHAO = 14.000

DZ	DCN	DCA	DCLM	DCY	DCBL	DCYN	DCL	DCD	DCSL	DCLN
.000	-.17326	.00633	.15084	-.01874	-.00455	.00266	-.17297	-.01182	-.00425	.00312
3.000	-.17507	.00751	.15680	-.01591	-.00506	.00469	-.17490	-.01083	-.00455	.00519
7.500	-.17012	.00969	.15254	-.00730	-.00440	.00287	-.17020	-.00915	-.00407	.00332
15.000	-.15282	.01197	.12691	.00593	-.00261	-.00250	-.15324	-.00407	-.00265	-.00222
30.000	-.12072	.01241	.08959	.01832	.00043	-.00933	-.12136	-.00028	-.00044	-.00333
45.000	-.09552	.01093	.06577	.01110	.00047	-.00473	-.09713	.00079	-.00003	-.00475
60.000	-.07816	.00958	.04834	.00659	.00040	-.00246	-.07873	.00135	.00014	-.00249
GRADIENT	.00047	.00045	.00013	.00156	.00003	-.00001	.00042	.00050	.00003	-.00001

CA20 (747/1 01 S1) - (747/1) D/S (116 - 036) (UGN116) (25 NOV 75)

REFERENCE DATA

SREF =	5500.0000 SQ.FT.	XMRP =	1339.9000 IN.XC		
LREF =	327.7800 IN.	YMRP =	.0000 IN.YC		
BREF =	2348.0400 IN.	ZMRP =	190.8000 IN.ZC		
SCALE =	.0300				

PARAMETRIC DATA

ALPHAC =	8.000	BETAC =	5.000
ELV-IB =	.000	ELV-OB =	3.000
ELEVON =	5.000	MACH =	.600
PHI =	.000	DX =	10.000
DY =	.000	BETAO =	-5.000

RN/L = 3.28 GRADIENT INTERVAL = .00/ 12.00

ALPHAO = 10.000

DZ	DCN	DCA	DCLM	DCY	DCBL	DCYN	DCL	DCD	DCSL	DCLN
.000	-.09182	-.00056	-.01406	-.00852	-.00108	-.00190	-.09033	-.01659	-.00140	-.00169
3.000	-.09181	-.00077	-.00737	-.00357	-.00114	-.00197	-.09028	-.01670	-.00147	-.00174
7.500	-.08949	-.00076	-.00250	.00281	-.00076	-.00311	-.08800	-.01629	-.00128	-.00293
15.000	-.08345	-.00074	-.00055	.00958	.00027	-.00483	-.08205	-.01522	-.00057	-.00480
30.000	-.07033	-.00178	.00764	.01196	.00116	-.00536	-.06895	-.01397	.00021	-.00548
45.000	-.05664	-.00268	.00757	.00706	.00100	-.00296	-.05532	-.01247	.00047	-.00309
60.000	-.04276	-.00374	.01059	.00334	.00103	-.00102	-.04146	-.01111	.00094	-.00119
GRADIENT	.00033	-.00002	.00150	.00150	.00005	-.00017	.00033	.00003	.00002	-.00017

DATE 04 DEC 75 TABULATED SOURCE DATA - CA20

CA20 (747/1 01 S1) - (747/1) D/S (116 - 036) (UGN116) (25 NOV 75)

REFERENCE DATA

SREF =	5500.0000 SQ.FT.	XMRP =	1339.9000 IN.XC
LREF =	327.7800 IN.	YMRP =	.0000 IN.YC
BREF =	2343.0400 IN.	ZMRP =	190.8000 IN.ZC
SCALE =	.0300		

PARAMETRIC DATA

ALPHAC =	8.000	BETAC =	5.000
ELV-IB =	.000	ELV-OB =	3.000
ELEVON =	5.000	MACH =	.600
PHI =	.000	DX =	10.000
DY =	.000	BETAO =	-5.000

RN/L = 3.26 GRADIENT INTERVAL = .00/ 12.00

ALPHAO = 14.000

DZ	DCN	DCA	DCLM	DCY	DCBL	DCYN	DCL	DCD	DCSL	DCLN
.000	-.15302	-.00190	.06853	-.01803	-.00328	.00195	-.15037	-.02844	-.00289	.00249
3.000	-.15124	-.00162	.06585	-.01129	-.00320	.00193	-.14865	-.02786	-.00282	.00246
7.500	-.14548	-.00089	.06104	-.00045	-.00203	-.00106	-.14312	-.02613	-.00218	-.00069
15.000	-.13355	-.00037	.05184	.01220	-.00032	-.00576	-.13155	-.02358	-.00132	-.00562
30.000	-.10972	-.00088	.04244	.01854	.00183	-.00890	-.10790	-.01932	.00025	-.00803
45.000	-.08018	-.00219	.03133	.00991	.00103	-.00405	-.08843	-.01782	.00031	-.00417
60.000	-.07282	-.00315	.02169	.00652	.00108	-.00230	-.07089	-.01559	.00063	-.00265
GRADIENT	.00103	.00014	-.00100	.00235	.00017	-.00042	.00059	.00031	.00010	-.00045

CA20 (747/1 01 S1) - (747/1) D/S (117 - 036) (UGN117) (25 NOV 75)

REFERENCE DATA

SREF =	5500.0000 SQ.FT.	XMRP =	1339.9000 IN.XC
LREF =	327.7800 IN.	YMRP =	.0000 IN.YC
BREF =	2348.0400 IN.	ZMRP =	190.8000 IN.ZC
SCALE =	.0300		

PARAMETRIC DATA

ALPHAC =	4.000	BETAC =	5.000
ELV-IB =	.000	ELV-OB =	3.000
ELEVON =	5.000	MACH =	.600
PHI =	.000	DX =	.000
DY =	10.000	BETAO =	-5.000

RUN NO. 0/ 0 RN/L = 3.29 GRADIENT INTERVAL = .00/ 12.00

ALPHAO	DZ	DCN	DCA	DCLM	DCY	DCBL	DCYN	DCL	DCD	DCSL	DCLN
10.000	.000	-.17260	.01306	.15589	-.01486	.00544	-.00540	-.17302	-.00505	.00484	-.00594
10.000	3.000	-.16653	.01329	.14629	-.01352	.00391	-.00254	-.16701	-.00419	.00362	-.00293
10.000	7.500	-.15311	.01278	.12765	-.01313	.00241	.00050	-.15361	-.00330	.00245	.00024
10.000	15.000	-.13209	.01242	.09027	-.00746	.00174	.00016	-.13265	-.00145	.00175	-.00002
10.000	30.000	-.10466	.01045	.05502	-.00416	.00080	.00076	-.10518	-.00055	.00087	.00067
10.000	45.000	-.08545	.00875	.03901	-.00139	.00052	.00059	-.08639	-.00033	.00058	.00053
10.000	60.000	-.06828	.00704	.02234	.00124	.00024	.00047	-.06854	-.00013	.00029	.00044
	GRADIENT	.00263	-.00004	-.00392	.00022	-.00040	.00078	.00282	.00023	-.00031	.00081

CA20 (747/1 01 SI) - (747/1) D/S (118 - 036) (UGN118) (25 NOV 75)

REFERENCE DATA

SREF = 5500.0000 SQ.FT. XMRP = 1339.9000 IN.XC
LREF = 327.7800 IN. YMRP = .0000 IN.YC
BREF = 2348.0400 IN. ZMRP = 190.8000 IN.ZC
SCALE = .0300

PARAMETRIC DATA

ALPHAC =	4.000	BETAC =	5.000
ELV-IB =	.000	ELV-OB =	3.000
ELEVON =	5.000	MACH =	.600
PHI =	.000	DX =	10.000
DY =	10.000	BETAO =	-5.000

RN/L = 3.29 GRADIENT INTERVAL = .00/ 12.00

ALPHAO = 10.000

DZ	DCN	DCA	DCLM	DCY	DCBL	DCYN	DCL	DCD	DCSL	DCLN
.000	-.12793	.01250	.13175	-.00995	.00498	-.00588	-.12853	-.00094	.00434	-.00537
3.000	-.12572	.01210	.12608	-.01165	.00353	-.00213	-.12630	-.00111	.00339	-.00249
7.500	-.11542	.01120	.10762	-.01273	.00226	.00127	-.11595	-.00093	.00233	.00103
15.000	-.10009	.01154	.07394	-.00698	.00172	.00012	-.10074	.00101	.00173	-.00065
30.000	-.07553	.00944	.04410	-.00577	.00052	.00180	-.07610	.00149	.00080	.00173
45.000	-.06133	.00852	.03289	-.00092	.00068	.00017	-.06189	.00207	.00069	.00010
60.000	-.04563	.00737	.02020	.00304	.00053	-.00081	-.04615	.00255	.00045	-.00066
GRADIENT	.00172	-.00018	-.00329	-.00035	-.00036	.00094	.00173	.00001	-.00026	.00097

RN/L = 3.25 GRADIENT INTERVAL = .00/ 12.00

ALPHAO = 14.000

DZ	DCN	DCA	DCLM	DCY	DCBL	DCYN	DCL	DCD	DCSL	DCLN
.000	-.18951	.00318	.26481	-.01479	.00738	-.00929	-.18891	-.01665	.00637	-.01001
3.000	-.19127	.00588	.26186	-.01426	.00606	-.00570	-.19084	-.01415	.00543	-.00630
7.500	-.18342	.00891	.23664	-.01694	.00432	.00027	-.18335	-.01031	.00432	-.00018
15.000	-.15706	.01074	.17041	-.01522	.00289	.00270	-.15732	-.00573	.00316	.00239
30.000	-.11889	.01059	.09574	-.00934	.00148	.00278	-.11935	-.00190	.00176	.00261
45.000	-.09353	.00964	.06547	-.00591	.00094	.00233	-.09403	-.00019	.00117	.00222
60.000	-.07592	.00897	.04697	-.00194	.00069	.00107	-.07645	.00053	.00100	.00097
GRADIENT	.00089	.00076	-.00390	-.00031	-.00041	.00128	.00080	.00064	-.00027	.00131

CA20 (747/1 01 S1) - (747/1) D/S (119 - 136) (UGN119) (25 NOV 75)

REFERENCE DATA

SREF = 5500.0000 SQ.FT.	XMRP = 1339.9000 IN.XC		
LREF = 327.7800 IN.	YMRP = .0000 IN.YC		
BREF = 2548.0400 IN.	ZMRP = 190.8000 IN.ZC		
SCALE = .0300			

PARAMETRIC DATA

ALPHAC =	8.000	BETAC =	5.000
ELV-IB =	.000	ELV-OB =	3.000
ELEVON =	5.000	MACH =	.600
PHI =	.000	DX =	10.000
DY =	10.000	BETAO =	-5.000

RN/L = 3.23 GRADIENT INTERVAL = .00/ 12.00

ALPHAO = 10.000

DZ	DCN	DCA	DCLM	DCY	DCBL	DCYN	DCL	DCD	DCSL	DCLN
.000	-.09403	.00116	.01738	-.00880	.00495	-.00546	-.09280	-.01518	.00393	-.00524
3.000	-.09225	.00036	.01546	-.00943	.00395	-.00285	-.09091	-.01567	.00340	-.00349
7.500	-.08273	-.00027	.02078	-.00621	.00305	-.00187	-.09127	-.01657	.00269	-.00237
15.000	-.08907	-.00058	.01206	-.00358	.00262	-.00106	-.08761	-.01604	.00240	-.00150
30.000	-.07175	-.00222	.00689	-.00190	.00134	.00052	-.07027	-.01465	.00141	.00027
45.000	-.05855	-.00218	.00693	.00280	.00168	-.00140	-.05729	-.01231	.00142	-.00167
60.000	-.04280	-.00296	.00516	.00630	.00133	-.00193	-.04164	-.01035	.00097	-.00213
GRADIENT	.00015	-.00019	.00051	.00037	-.00025	.00046	.00018	-.00016	-.00017	.00050

RN/L = 3.22 GRADIENT INTERVAL = .00/ 12.00

ALPHAO = 14.000

DZ	DCN	DCA	DCLM	DCY	DCBL	DCYN	DCL	DCD	DCSL	DCLN
.000	-.15578	-.00170	.12894	-.01549	.00584	-.00693	-.15312	-.02872	.00454	-.00784
3.000	-.15203	-.00201	.11667	-.01754	.00423	-.00215	-.14937	-.02839	.00379	-.00225
7.500	-.14355	-.00207	.09455	-.01759	.00326	.00115	-.14101	-.02697	.00341	.00057
15.000	-.13205	-.00226	.07146	-.01142	.00266	.00109	-.12965	-.02516	.00281	.00061
30.000	-.10743	-.00289	.04051	-.00618	.00169	.00155	-.10528	-.02159	.00193	.00125
45.000	-.08917	-.00305	.03065	-.00195	.00151	.00052	-.08530	-.01832	.00169	.00035
60.000	-.07283	-.00327	.02126	.00105	.00142	-.00026	-.07115	-.01597	.00135	-.00050
GRADIENT	.00165	-.00005	-.00461	-.00025	-.00033	.00105	.00163	.00024	-.00015	.00103

CA20 (747/1 02 S1) - (747/1) D/S (126 - 034) (UGN126) (25 NOV 75)

REFERENCE DATA

SREF = 5500.0000 SQ.FT. XMRP = 1339.9000 IN.XC
LREF = 327.7800 IN. YMRP = .0000 IN.YC
BREF = 2348.0400 IN. ZMRP = 190.8000 IN.ZC
SCALE = .0300

PARAMETRIC DATA

ALPHAC =	4.000	BETAC =	-5.000
ELV-IB =	.000	ELV-OB =	3.000
ELEVON =	5.000	MACH =	.600
PHI =	.000	DX =	.000
DY =	.000	BETAO =	.000

RUN NO. 0/ 0 RN/L = 3.28 GRADIENT INTERVAL = .00/ 12.00

ALPHAO	DZ	DCN	DCA	DCLM	DCY	DCBL	DCYN	DCL	DCD	DCSL	DCLN
10.000	.000	-.18426	.01194	.13783	.00885	.00122	.00302	-.18450	-.00739	.00153	.00288
10.000	3.000	-.17757	.01220	.13166	.00787	.00191	.00027	-.17788	-.00543	.00193	.00007
10.000	7.500	-.16327	.01304	.10917	.00623	.00213	-.00072	-.16373	-.00410	.00205	-.00093
10.000	15.000	-.14122	.01267	.08242	.00302	.00187	-.00065	-.14177	-.00216	.00180	-.00084
10.000	30.000	-.11179	.01167	.05769	-.00354	.00040	.00219	-.11240	-.00008	.00062	.00213
10.000	45.000	-.09253	.00994	.04609	-.00223	.00013	.00135	-.09306	.00011	.00027	.00134
10.000	60.000	-.07650	.00805	.03524	.00097	.00016	-.00043	-.07692	.00001	.00011	-.00044
	GRADIENT	.00283	.00015	-.00391	-.00035	.00012	-.00048	.00280	.00045	.00007	-.00049

CA20 (747/1 02 S1) - (747/1) D/S (127 - 034) (UGN127) (25 NOV 75)

REFERENCE DATA

SREF = 5500.0000 SQ.FT. XMRP = 1339.9000 IN.XC
LREF = 327.7800 IN. YMRP = .0000 IN.YC
BREF = 2348.0400 IN. ZMRP = 190.8000 IN.ZC
SCALE = .0300

PARAMETRIC DATA

ALPHAC =	4.000	BETAC =	-5.000
ELV-IB =	.000	ELV-OB =	3.000
ELEVON =	5.000	MACH =	.600
PHI =	.000	DX =	10.000
DY =	.000	BETAO =	.000

RUN NO. 0/ 0 RN/L = 3.34 GRADIENT INTERVAL = .00/ 12.00

ALPHAO	DZ	DCN	DCA	DCLM	DCY	DCBL	DCYN	DCL	DCD	DCSL	DCLN
10.000	.000	-.16227	.00964	.13366	.00896	.00132	.00226	-.16239	-.00738	.00155	.00210
10.000	3.000	-.15775	.01005	.12661	.00982	.00194	-.00075	-.15784	-.00649	.00185	-.00095
10.000	7.500	-.14602	.01081	.10356	.00863	.00216	-.00170	-.14635	-.00451	.00197	-.00192
10.000	15.000	-.13037	.01105	.08182	.00609	.00211	-.00181	-.13081	-.00264	.00191	-.00202
10.000	30.000	-.10578	.01073	.05747	-.00174	.00060	.00164	-.10622	-.00039	.00077	.00157
10.000	45.000	-.08973	.00928	.04573	-.00084	.00023	.00104	-.09021	-.00015	.00034	.00101
10.000	60.000	-.07589	.00795	.03514	.00164	.00021	-.00027	-.07631	-.00003	.00019	-.00039
	GRADIENT	.00220	.00016	-.00409	-.00006	.00011	-.00050	.00217	.00039	.00005	-.00051

CA20 (747/1 02 S1) - (747/1) D/S (128 - 034) (UGN128) (25 NOV 75)

REFERENCE DATA

SREF =	5500.0000 SQ.FT.	XMRP =	1339.9000 IN.XC
LREF =	327.7800 IN.	YMRP =	.0000 IN.YC
EREF =	2348.0400 IN.	ZMRP =	190.8000 IN.ZC
SCALE =	.0300		

PARAMETRIC DATA

ALPHAC =	4.000	BETAC =	-5.000
ELV-IB =	.000	ELV-OB =	3.000
ELEVON =	5.000	MACH =	.600
PHI =	.000	DX =	20.000
DY =	.000	BETAO =	.000

RUN NO. 0/ 0 RN/L = 3.32 GRADIENT INTERVAL = .00/ 12.00

ALPHAO	DZ	DCN	DCA	DCLM	DCY	DCBL	DCYN	DCL	DCD	DCSL	DCLN
10.000	.000	-.14111	.00887	.11239	.00806	.00070	.00233	-.14126	-.00593	.00094	.00221
10.000	3.000	-.13800	.00855	.10910	.01016	.00156	-.00089	-.13813	-.00593	.00146	-.00105
10.000	7.500	-.12997	.00896	.09141	.01009	.00187	-.00244	-.13020	-.00468	.00161	-.00262
10.000	15.000	-.11678	.00913	.07392	.00706	.00208	-.00216	-.11709	-.00313	.00184	-.00237
10.000	30.000	-.09765	.00941	.05357	-.00059	.00061	.00102	-.09810	-.00085	.00071	.00095
10.000	45.000	-.08325	.00828	.04376	-.00095	.00009	.00113	-.08366	-.00047	.00020	.00111
10.000	60.000	-.06870	.00685	.03456	.00054	-.00002	.00035	-.06904	-.00037	.00001	.00035
	GRADIENT	.00151	.00002	-.00289	.00025	.00015	-.00061	.00150	.00018	.00009	-.00062

CA20 (747/1 02 S1) - (747/1) D/S (129 - 035) (UGN129) (25 NOV 75)

REFERENCE DATA

SREF =	5500.0000 SQ.FT.	XMRP =	1339.9000 IN.XC
LREF =	327.7800 IN.	YMRP =	.0000 IN.YC
EREF =	2348.0400 IN.	ZMRP =	190.8000 IN.ZC
SCALE =	.0300		

PARAMETRIC DATA

ALPHAC =	4.000	BETAC =	.000
ELV-IB =	.000	ELV-OB =	3.000
ELEVON =	5.000	MACH =	.600
PHI =	.000	DX =	.000
DY =	.000	BETAO =	.000

RN/L = 3.31 GRADIENT INTERVAL = .00/ 12.00

ALPHAO = 10.000

DZ	DCN	DCA	DCLM	DCY	DCBL	DCYN	DCL	DCD	DCSL	DCLN
.000	-.17063	.01383	.15040	.00160	.00107	-.00231	-.17114	-.00408	.00083	-.00240
3.000	-.16503	.01445	.15294	.00182	.00095	-.00182	-.16564	-.00288	.00075	-.00191
7.500	-.14586	.01393	.12347	.00171	.00080	-.00129	-.14652	-.00139	.00056	-.00137
15.000	-.12317	.01334	.09298	.00084	.00052	-.00051	-.12389	.00039	.00046	-.00056
30.000	-.09114	.01112	.05959	-.00070	.00004	.00044	-.09180	.00153	.00009	.00043
45.000	-.07176	.00935	.04544	-.00013	.00019	.00025	-.07235	.00180	.00022	.00023
60.000	-.05333	.00778	.03362	.00015	.00064	.00016	-.05385	.00216	.00065	.00009
GRADIENT	.00358	.00000	-.00382	.00001	-.00004	.00013	.00335	.00035	-.00002	.00014

ORIGINAL PAGE IS
OF POOR QUALITY

CA20 (747/1 02 S1) - (747/1) D/S (129 - 035) (UGN129) (25 NOV 75)

REFERENCE DATA

SREF = 5500.0000 SQ.FT. XMRP = 1339.9000 IN.XC
LREF = 327.7800 IN. YMRP = .0000 IN.YC
BREF = 2348.0400 IN. ZMRP = 190.8000 IN.ZC
SCALE = .0300

PARAMETRIC DATA

ALPHAC =	4.000	BETAC =	.000
ELV-IB =	.000	ELV-OB =	3.000
ELEVON =	5.000	MACH =	.600
PHI =	.000	DX =	.000
DY =	.000	BETAO =	.000

RN/L = 3.29 GRADIENT INTERVAL = .00/ 12.00

ALPHAO = 14.000

DZ	DCN	DCA	DCLM	DCY	DCBL	DCYN	DCL	DCD	DCSL	DCLN
.000	-.26079	.01153	.26475	.00324	.00129	-.00296	-.26056	-.01579	.00097	-.00307
3.000	-.24873	.01141	.25554	.00177	.00098	-.00184	-.24855	-.01465	.00078	-.00194
7.500	-.22677	.01255	.22959	.00105	.00079	-.00110	-.22684	-.01122	.00067	-.00118
15.000	-.18898	.01413	.17414	.00175	.00072	-.00117	-.18942	-.00570	.00059	-.00123
30.000	-.13798	.01276	.11117	.00037	.00028	-.00004	-.13856	-.00174	.00028	-.00006
45.000	-.10628	.01114	.08005	-.00018	.00014	.00037	-.10696	-.00003	.00018	.00036
60.000	-.08507	.00967	.06039	-.00024	.00019	.00038	-.08551	.00073	.00023	.00035
GRADIENT	.00456	.00015	-.00477	-.00028	-.00007	.00024	.00462	.00062	-.00004	.00025

CA20 (747/1 02 S1) - (747/1) D/S (130 - 035) (UGN130) (25 NOV 75)

REFERENCE DATA

SREF = 5500.0000 SQ.FT. XMRP = 1339.9000 IN.XC
LREF = 327.7800 IN. YMRP = .0000 IN.YC
BREF = 2348.0400 IN. ZMRP = 190.8000 IN.ZC
SCALE = .0300

PARAMETRIC DATA

ALPHAC =	4.000	BETAC =	.000
ELV-IB =	.000	ELV-OB =	3.000
ELEVON =	5.000	MACH =	.600
PHI =	.000	DX =	10.000
DY =	.000	BETAO =	.000

RN/L = 3.30 GRADIENT INTERVAL = .00/ 12.00

ALPHAO = 10.000

DZ	DCN	DCA	DCLM	DCY	DCBL	DCYN	DCL	DCD	DCSL	DCLN
.000	-.14907	.01109	.14886	.00285	.00120	-.00244	-.14942	-.00455	.00094	-.00255
3.000	-.14460	.01202	.14621	.00280	.00108	-.00199	-.14507	-.00316	.00085	-.00209
7.600	-.13154	.01204	.12055	.00216	.00092	-.00124	-.13208	-.00177	.00078	-.00133
15.000	-.11456	.01188	.09306	.00170	.00064	-.00070	-.11518	-.00016	.00055	-.00076
30.000	-.08626	.00993	.06109	-.00076	.00023	.00045	-.08682	.00088	.00028	.00042
45.000	-.07017	.00893	.04690	-.00014	.00017	.00026	-.07071	.00155	.00020	.00024
60.000	-.05709	.00831	.03485	.00089	.00010	-.00002	-.05763	.00230	.00010	-.00004
GRADIENT	.00239	.00012	-.00393	-.00010	-.00004	.00016	.00238	.00037	-.00002	.00016

CA20 (747/1 02 S1) - (747/1) D/S (130 - 035) (UGN130) (25 NOV 75)

REFERENCE DATA

SREF =	5500.0000 SQ.FT.	XMRP =	1339.9000 IN.XC		
LREF =	327.7800 IN.	YMRP =	.0000 IN.YC		
BREF =	2348.0400 IN.	ZMRP =	190.8000 IN.ZC		
SCALE =	.0300				

PARAMETRIC DATA

ALPHAC =	4.000	BETAC =	.000
ELV-IB =	.000	ELV-OB =	3.000
ELEVON =	5.000	MACH =	.600
PHI =	.000	DX =	10.000
DY =	.000	BETAO =	.000

RN/L = 3.31 GRADIENT INTERVAL = .00/ 12.00

ALPHAO = 14.000

DZ	DCN	DCA	DCLM	DCY	DCBL	DCYN	DCL	DCD	DCSL	DCLN
.000	-.22473	.00626	.28700	.00623	.00147	-.00395	-.22415	-.01726	.00105	-.00408
3.000	-.21763	.00732	.28081	.00405	.00114	-.00256	-.21716	-.01546	.00087	-.00267
7.500	-.20006	.00935	.24765	.00235	.00079	-.00134	-.19994	-.01161	.00064	-.00141
15.000	-.16927	.01124	.18241	.00168	.00064	-.00079	-.16952	-.00651	.00055	-.00085
30.000	-.12203	.01109	.11721	.00082	.00026	.00005	-.12854	-.00236	.00026	.00003
45.000	-.10070	.01000	.08416	-.00001	.00010	.00043	-.10119	-.00058	.00014	.00042
60.000	-.08249	.00803	.06450	.00007	.00005	.00038	-.08298	.00036	.00009	.00033
GRADIENT	.00334	.00042	-.00541	-.00051	-.00009	.00034	.00327	.00076	-.00005	.00035

CA20 (747/1 02 S1) - (747/1) D/S (131 - 035) (UGN131) (25 NOV 75)

REFERENCE DATA

SREF =	5500.0000 SQ.FT.	XMRP =	1339.9000 IN.XC		
LREF =	327.7800 IN.	YMRP =	.0000 IN.YC		
BREF =	2348.0400 IN.	ZMRP =	190.8000 IN.ZC		
SCALE =	.0300				

PARAMETRIC DATA

ALPHAC =	4.000	BETAC =	.000
ELV-IB =	.000	ELV-OB =	3.000
ELEVON =	5.000	MACH =	.600
PHI =	.000	DX =	20.000
DY =	.000	BETAO =	.000

RN/L = 3.29 GRADIENT INTERVAL = .00/ 12.00

ALPHAO = 10.000

DZ	DCN	DCA	DCLM	DCY	DCBL	DCYN	DCL	DCD	DCSL	DCLN
.000	-.12881	.00880	.12995	.00205	.00093	-.00181	-.12902	-.00471	.00074	-.00190
3.000	-.12567	.00983	.12765	.00149	.00074	-.00115	-.12601	-.00336	.00061	-.00122
7.500	-.11557	.01048	.11005	.00028	.00046	-.00034	-.11603	-.00166	.00042	-.00039
15.000	-.10175	.01058	.08590	-.00017	.00018	.00019	-.10230	-.00012	.00019	.00017
30.000	-.08024	.00960	.05992	-.00167	-.00021	.00104	-.08381	.00116	-.00010	.00106
45.000	-.06645	.00877	.04651	-.00065	-.00010	.00066	-.06701	.00178	-.00004	.00057
60.000	-.05447	.00794	.03931	.00096	.00010	.00005	-.05500	.00220	.00011	.00004
GRADIENT	.00180	.00022	-.00275	-.00024	-.00006	.00020	.00177	.00040	-.00004	.00020

CA20 (747/1 02 S11 - (747/1) D/S (131 - 035) (UGN131) (25 NOV 75)

REFERENCE DATA

SREF = 5500.0000 SQ.FT. XMRP = 1339.9000 IN.XC
LREF = 327.7800 IN. YMRP = .0000 IN.YC
BREF = 2348.0400 IN. ZMRP = 190.8000 IN.ZC
SCALE = .0300

PARAMETRIC DATA

ALPHAC =	4.000	BETAC =	.000
ELV-IB =	.000	ELV-OB =	3.000
ELEVON =	5.000	MACH =	.600
PHI =	.000	DX =	20.000
DY =	.000	BETAO =	.000

RN/L = 3.30 GRADIENT INTERVAL = .00/ 12.00

ALPHAO = 14.000

DZ	DCN	DCA	DCLM	DCY	DCBL	DCYN	DCL	DCD	DCSL	DCLN
.000	-.19292	.00335	.27564	.00330	.00108	-.00269	-.19221	-.01683	.00080	-.00279
3.000	-.18726	.00507	.27045	.00256	.00088	-.00194	-.18577	-.01453	.00067	-.00202
7.500	-.17281	.00741	.23938	.00147	.00067	-.00098	-.17263	-.01070	.00056	-.00104
15.000	-.14964	.00939	.18364	.00022	.00035	.00002	-.14980	-.00631	.00035	-.00002
30.000	-.11536	.00931	.11999	-.00117	-.00009	.00077	-.11571	-.00280	-.00001	.00077
45.000	-.09343	.00913	.08638	-.00083	-.00007	.00070	-.09387	-.00069	.00001	.00070
60.000	-.07825	.00860	.06576	-.00110	-.00017	.00080	-.07872	.00038	-.00009	.00081
GRADIENT	.00272	.00054	-.00500	-.00024	-.00005	.00023	.00265	.00022	-.00003	.00023

CA20 (747/1 02 S1) - (747/1) D/S (132 - 035) (UGN132) (25 NOV 75)

REFERENCE DATA

SREF = 5500.0000 SQ.FT. XMRP = 1339.9000 IN.XC
LREF = 327.7800 IN. YMRP = .0000 IN.YC
BREF = 2348.0400 IN. ZMRP = 190.8000 IN.ZC
SCALE = .0300

PARAMETRIC DATA

ALPHAC =	8.000	BETAC =	.000
ELV-IB =	.000	ELV-OB =	3.000
ELEVON =	5.000	MACH =	.600
PHI =	.000	DX =	.000
DY =	.000	BETAO =	.000

RN/L = 3.29 GRADIENT INTERVAL = .00/ 12.00

ALPHAO = 10.000

DZ	DCN	DCA	DCLM	DCY	DCBL	DCYN	DCL	DCD	DCSL	DCLN
.000	-.10566	-.00244	-.01866	.00101	.00034	-.00239	-.10363	-.02075	-.00008	-.00241
3.000	-.10059	-.00332	-.01842	.00017	.00019	-.00161	-.09947	-.02074	-.00009	-.00162
7.500	-.09296	-.00429	-.01799	-.00060	.00007	-.00080	-.09080	-.02037	-.00007	-.00080
15.000	-.08255	-.00547	-.01475	-.00073	-.00007	-.00005	-.08035	-.01973	-.00008	-.00004
30.000	-.06546	-.00596	-.01100	-.00014	.00011	.00014	-.06325	-.01822	.00013	.00012
45.000	-.05483	-.00739	-.00356	.00085	.00046	-.00005	-.05273	-.01671	.00044	-.00013
60.000	-.04725	-.00708	.00253	.00051	.00073	.00010	-.04530	-.01518	.00074	-.00003
GRADIENT	.00169	-.00024	.00009	-.00021	-.00004	.00021	.00171	.00005	.00000	.00021

CA20 (747/1 02 S1) - (747/1) D/S (132 - 035) (UGN132) (25 NOV 75)

REFERENCE DATA

SREF = 5500.0000 SQ.FT. XMRP = 1339.9000 IN.XC
LREF = 327.7800 IN. YMRP = .0000 IN.YC
BREF = 2348.0400 IN. ZMRP = 190.8000 IN.ZC
SCALE = .0300

PARAMETRIC DATA

ALPHAC =	8.000	BETAC =	.000
ELV-IB =	.000	ELV-OB =	3.000
ELEVON =	5.000	MACH =	.600
PHI =	.000	DX =	.000
DY =	.000	BETAO =	.000

RN/L = 3.28 GRADIENT INTERVAL = .00/ 12.00

ALPHAO = 14.000

DZ	DCN	DCA	DCLM	DCY	DCBL	DCYN	DCL	DCD	DCSL	DCLN
.000	-.19127	-.00343	.09657	.00043	.00074	-.00251	-.18777	-.03659	.00029	-.00260
3.000	-.18077	-.00332	.08926	.00027	.00053	-.00186	-.17745	-.03469	.00020	-.00192
7.500	-.16072	-.00436	.08210	-.00008	.00039	-.00119	-.15752	-.03220	.00018	-.00124
15.000	-.13571	-.00569	.03694	-.00093	.00001	-.00033	-.13365	-.02935	-.00004	-.00033
30.000	-.10147	-.00752	.01520	-.00144	-.00055	.00053	-.09862	-.02503	-.00045	.00052
45.000	-.07895	-.00816	.00772	-.00110	-.00065	.00033	-.07633	-.02175	-.00058	.00044
60.000	-.06309	-.00782	.00584	-.00002	-.00075	-.00004	-.06081	-.01846	-.00074	.00009
GRADIENT	.00410	-.00013	-.00469	-.00007	-.00005	.00017	.00406	.00058	-.00001	.00018

CA20 (747/1 02 S1) - (747/1) D/S (133 - 035) (UGN133) (25 NOV 75)

REFERENCE DATA

SREF = 5500.0000 SQ.FT. XMRP = 1339.9000 IN.XC
LREF = 327.7800 IN. YMRP = .0000 IN.YC
BREF = 2348.0400 IN. ZMRP = 190.8000 IN.ZC
SCALE = .0300

PARAMETRIC DATA

ALPHAC =	8.000	BETAC =	.000
ELV-IB =	.000	ELV-OB =	3.000
ELEVON =	5.000	MACH =	.600
PHI =	.000	DX =	10.000
DY =	.000	BETAO =	.000

RN/L = 3.32 GRADIENT INTERVAL = .00/ 12.00

ALPHAO = 10.000

DZ	DCN	DCA	DCLM	DCY	DCBL	DCYN	DCL	DCD	DCSL	DCLN
.000	-.09386	-.00429	-.01623	.00272	.00128	-.00256	-.09169	-.02052	.00082	-.00274
3.000	-.09017	-.00470	-.01428	.00220	.00107	-.00187	-.08799	-.02029	.00073	-.00203
7.500	-.09374	-.00535	-.01394	.00121	.00085	-.00101	-.09154	-.01992	.00066	-.00114
15.000	-.07460	-.00618	-.01246	-.00053	.00048	.00012	-.07239	-.01904	.00049	.00003
30.000	-.05095	-.00686	-.00768	-.00026	.00045	.00028	-.05884	-.01734	.00049	.00020
45.000	-.05169	-.00622	-.00045	.00019	.00095	.00008	-.04982	-.01510	.00095	-.00008
60.000	-.04255	-.00545	.00418	.00002	.00107	.00032	-.04095	-.01276	.00111	.00013
GRADIENT	.00136	-.00014	.00029	-.00020	-.00006	.00021	.00135	.00009	-.00002	.00021

CA20 (747/1 02 S1) - (747/1) D/S (133 - 035) (UGN133) (25 NOV 75)

REFERENCE DATA

SREF = 5500.0000 SQ.FT. XMRP = 1339.9000 IN.XC
LREF = 327.7800 IN. YMRP = .0000 IN.YC
BREF = 2348.0400 IN. ZMRP = 190.8000 IN.ZC
SCALE = .0300

PARAMETRIC DATA

ALPHAC = 8.000 BETAC = .000
ELV-IB = .000 ELV-OB = 3.000
ELEVON = 5.000 MACH = .600
PHI = .000 DX = 10.000
DY = .000 BETAO = .000

RN/L = 3.30 GRADIENT INTERVAL = .00/ 12.00

ALPHAO = 14.000

DZ	DCN	DCA	DCLM	DCY	DCBL	DCYN	DCL	DCD	DCSL	DCLN
.000	-.15619	-.00564	.10536	.00147	.00062	-.00236	-.15284	-.03268	.00020	-.00243
3.000	-.14870	-.00526	.09643	.00115	.00045	-.00173	-.14553	-.03100	.00015	-.00178
7.500	-.13610	-.00577	.07380	.00037	.00023	-.00099	-.13303	-.02932	.00005	-.00101
15.000	-.11902	-.00670	.04950	-.00102	-.00008	-.00015	-.11605	-.02726	-.00011	-.00013
30.000	-.09194	-.00751	.02456	-.00231	-.00072	.00087	-.08924	-.02336	-.00056	.00088
45.000	-.07401	-.00756	.01744	-.00153	-.00071	.00046	-.07157	-.02029	-.00062	.00057
60.000	-.06148	-.00718	.01354	-.00119	-.00069	.00043	-.05930	-.01775	-.00061	.00054
GRADIENT	.00269	-.00002	-.00427	-.00015	-.00005	.00018	.00265	.00044	-.00002	.00019

CA20 (747/1 02 S1) - (747/1) D/S (134 - 035) (UGN134) (25 NOV 75)

REFERENCE DATA

SREF = 5500.0000 SQ.FT. XMRP = 1339.9000 IN.XC
LREF = 327.7800 IN. YMRP = .0000 IN.YC
BREF = 2348.0400 IN. ZMRP = 190.8000 IN.ZC
SCALE = .0300

PARAMETRIC DATA

ALPHAC = 8.000 BETAC = .000
ELV-IB = .000 ELV-OB = 3.000
ELEVON = 5.000 MACH = .600
PHI = .000 DX = 20.000
DY = .000 BETAO = .000

RN/L = 3.27 GRADIENT INTERVAL = .00/ 12.00

ALPHAO = 10.000

DZ	DCN	DCA	DCLM	DCY	DCBL	DCYN	DCL	DCD	DCSL	DCLN
.000	-.07538	-.00597	-.03481	.00026	.00012	-.00148	-.07319	-.01897	-.00014	-.00148
3.000	-.07435	-.00551	-.02616	-.00074	-.00016	-.00073	-.07225	-.01844	-.00029	-.00069
7.500	-.07003	-.00609	-.02354	-.00209	-.00050	-.00003	-.06791	-.01818	-.00050	.00006
15.000	-.06126	-.00569	-.02244	-.00316	-.00111	.00069	-.05917	-.01721	-.00097	.00088
30.000	-.05122	-.00532	-.00826	-.00273	-.00074	.00076	-.04952	-.01413	-.00060	.00089
45.000	-.04612	-.00410	.00139	-.00179	.00074	.00037	-.04471	-.01205	.00079	.00024
60.000	-.03723	-.00350	.00537	-.00062	.00118	.00056	-.03606	-.00992	.00125	.00035
GRADIENT	.00073	-.00002	.00143	-.00031	-.00008	.00019	.00073	.00011	-.00005	.00020

CA20 (747/1 02 S1) - (747/1) D/S (134 - 035) (UGN134) (25 NOV 75)

REFERENCE DATA

SREF =	5500.0000 SQ.FT.	XMRP =	1339.9000 IN.XC
LREF =	327.7800 IN.	YMRP =	.0000 IN.YC
BREF =	2348.0400 IN.	ZMRP =	190.8000 IN.ZC
SCALE =	.0300		

PARAMETRIC DATA

ALPHAC =	8.000	BETAC =	.000
ELV-IB =	.000	ELV-OB =	3.000
ELEVON =	5.000	MACH =	.600
PHI =	.000	DX =	20.000
DY =	.000	BETAO =	.000

RN/L = 3.29 GRADIENT INTERVAL = .00/ 12.00

ALPHAO = 14.000

DZ	DCN	DCA	DCLM	DCY	DCBL	DCYN	DCL	DCD	DCSL	DCLN
.000	-.13336	-.00723	.09558	.00017	.00028	-.00167	-.13009	-.03027	-.00001	-.00169
3.000	-.12284	-.00614	.09266	-.00111	-.00010	-.00075	-.12581	-.02842	-.00023	-.00072
7.500	-.11900	-.00560	.07642	-.00265	-.00035	.00034	-.11618	-.02639	-.00029	.00039
15.000	-.10543	-.00550	.05329	-.00367	-.00083	.00093	-.10270	-.02471	-.00065	.00105
30.000	-.08540	-.00555	.03323	-.00452	-.00118	.00146	-.09295	-.02138	-.00091	.00164
45.000	-.05937	-.00652	.02749	-.00234	-.00087	.00065	-.05718	-.01647	-.00074	.00079
60.000	-.05999	-.00575	.02154	-.00214	-.00063	.00083	-.05781	-.01705	-.00047	.00093
GRADIENT	.00194	.00018	-.00264	-.00037	-.00008	.00026	.00188	.00051	-.00004	.00028

CA20 (747/1 02 S1) - (747/1) D/S (135 - 034) (UGN135) (25 NOV 75)

REFERENCE DATA

SREF =	5500.0000 SQ.FT.	XMRP =	1339.9000 IN.XC
LREF =	327.7800 IN.	YMRP =	.0000 IN.YC
BREF =	2348.0400 IN.	ZMRP =	190.8000 IN.ZC
SCALE =	.0300		

PARAMETRIC DATA

ALPHAC =	4.000	BETAC =	-5.000
ELV-IB =	.000	ELV-OB =	3.000
ELEVON =	5.000	MACH =	.600
PHI =	.000	DX =	.000
DY =	10.000	BETAO =	.000

RUN NO. 0/ 0 RN/L = 3.27 GRADIENT INTERVAL = .00/ 12.00

ALPHAO	DZ	DCN	DCA	DCLM	DCY	DCBL	DCYN	DCL	DCD	DCSL	DCLN
10.000	.000	-.17168	.01422	.05389	-.00733	.00984	-.00365	-.17223	-.00390	.00941	-.00465
10.000	3.000	-.16206	.01441	.05221	-.00786	.00893	-.00262	-.16269	-.00281	.00861	-.00354
10.000	7.500	-.14920	.01437	.04706	-.01028	.00735	-.00059	-.14988	-.00131	.00725	-.00136
10.000	15.000	-.13109	.01390	.04280	-.01600	.00469	.00352	-.13182	.00112	.00503	.00301
10.000	30.000	-.10557	.01223	.04035	-.02125	.00065	.00855	-.10627	.00113	.00155	.00853
10.000	45.000	-.08704	.01012	.03227	-.01133	.00034	.00449	-.08762	.00097	.00081	.00443
10.000	60.000	-.08867	.00801	.02496	-.00287	-.00015	.00101	-.05914	.00079	-.00005	.00102
	GRADIENT	.00299	.00002	-.00093	-.00040	-.00033	.00041	.00297	.00033	-.00029	.00044

ORIGINAL PAGE IS
OF POOR QUALITY

CA20 (747/1 02 S1) - (747/1) D/S (136 - 034) (UGN136) (25 NOV 75)

REFERENCE DATA

SREF = 5500.0000 SQ.FT. XMRP = 1339.9000 IN.XC
LREF = 327.7800 IN. YMRP = .0000 IN.YC
BREF = 2348.0400 IN. ZMRP = 190.8000 IN,ZC
SCALE = .0300

PARAMETRIC DATA

ALPHAC = 4.000 BETAC = -5.000
ELV-1B = .000 ELV-0B = 3.000
ELEVON = 5.000 MACH = .600
PHI = .000 DX = 10.000
DY = 10.000 BETAO = .000

RUN NO. 0/ 0 RN/L = 3.26 GRADIENT INTERVAL = .00/ 12.00

ALPHAO	DZ	DCN	DCA	DCLM	DCY	DCBL	DCYN	DCL	DCD	DCSL	DCLN
10.000	.000	-.14308	.00980	.04953	-.00062	.00859	-.00544	-.14332	-.00521	.00796	-.00631
10.000	3.000	-.13709	.01032	.04841	-.00108	.00813	-.00467	-.13742	-.00407	.00760	-.00550
10.000	7.500	-.12778	.01065	.04705	-.00435	.00703	-.00240	-.12819	-.00276	.00674	-.00312
10.000	15.000	-.11365	.01065	.04186	-.01128	.00444	.00216	-.11414	-.00128	.00465	.00169
10.000	30.000	-.09359	.01020	.03782	-.01748	.00066	.00729	-.09414	.00036	.00142	.00718
10.000	45.000	-.07813	.00835	.03026	-.01032	.00039	.00408	-.07859	.00014	.00080	.00401
10.000	60.000	-.06383	.00616	.02147	.00074	.00125	-.00195	-.06413	-.00055	.00104	-.00207
	GRADIENT	.00204	.00011	-.00033	-.00052	-.00021	.00041	.00202	.00032	-.00016	.00043

CA20 (747/1 02 S1) - (747/1) D/S (137 - 035) (UGN137) (25 NOV 75)

REFERENCE DATA

SREF = 5500.0000 SQ.FT. XMRP = 1339.9000 IN.XC
LREF = 327.7800 IN. YMRP = .0000 IN.YC
BREF = 2348.0400 IN. ZMRP = 190.8000 IN.ZC
SCALE = .0300

PARAMETRIC DATA

ALPHAC = 4.000 BETAC = .000
ELV-1B = .000 ELV-0B = 3.000
ELEVON = 5.000 MACH = .600
PHI = .000 DX = .000
DY = 10.000 BETAO = .000

RUN NO. 0/ 0 RN/L = 3.35 GRADIENT INTERVAL = .00/ 12.00

ALPHAO	DZ	DCN	DCA	DCLM	DCY	DCBL	DCYN	DCL	DCD	DCSL	DCLN
10.000	.000	-.18579	.01511	.13851	-.00912	.01017	-.00765	-.18635	-.00439	.00932	-.00857
10.000	3.000	-.17491	.01512	.12745	-.00871	.00845	-.00532	-.17553	-.00325	.00785	-.00617
10.000	7.500	-.15929	.01452	.11034	-.01057	.00661	-.00225	-.15993	-.00221	.00634	-.00293
10.000	15.000	-.13744	.01339	.08509	-.01341	.00419	.00164	-.13809	-.00105	.00434	.00120
10.000	30.000	-.10823	.01087	.05664	-.01741	.00088	.00662	-.10878	-.00050	.00157	.00649
10.000	45.000	-.08763	.00908	.04049	-.01130	.00031	.00465	-.08810	-.00013	.00079	.00459
10.000	60.000	-.06708	.00732	.02369	-.00605	-.00044	.00311	-.06748	.00027	-.00011	.00314
	GRADIENT	.00353	-.00008	-.00376	-.00021	-.00047	.00072	.00352	.00029	-.00039	.00076

CA20 (747/1 02 S1) - (747/1) D/S (138 - 035) (UGN139) (25 NOV 75)

REFERENCE DATA

SREF = 5500.0000 SQ.FT. XMRP = 1339.8000 IN.XC
LREF = 327.7800 IN. YMRP = .0000 IN.YC
BREF = 2348.0400 IN. ZMRP = 190.8000 IN.ZC
SCALE = .0300

PARAMETRIC DATA

ALPHAC = 4.000 BETAC = .000
ELV-IB = .000 ELV-OB = 3.000
ELEVON = 5.000 MACH = .600
PHI = .000 DX = 10.000
DY = 10.000 BETAO = .000

RUN NO. 0/ 0 RN/L = 3.29 GRADIENT INTERVAL = .00/ 12.00

ALPHAO	DZ	DCN	DCA	DCLM	DCY	DCBL	DCYN	DCL	DCD	DCSL	DCLN
10.000	.000	-.15586	.01107	.12812	-.00414	.00860	-.00734	-.15616	-.00528	.00772	-.00680
10.000	3.000	-.14877	.01152	.12094	-.00442	.00721	-.00593	-.14916	-.00410	.00655	-.00555
10.000	7.500	-.13747	.01144	.10979	-.00730	.00550	-.00293	-.13792	-.00299	.00526	-.00359
10.000	15.000	-.12139	.01103	.08199	-.01103	.00376	.00084	-.12185	-.00172	.00383	.00044
10.000	30.000	-.09544	.00894	.05407	-.01562	.00074	.00592	-.09585	-.00119	.00138	.00581
10.000	45.000	-.07889	.00755	.03768	-.01065	.00017	.00412	-.07925	-.00074	.00060	.00408
10.000	60.000	-.06263	.00697	.02324	-.00232	.00039	.00007	-.06286	-.00011	.00039	.00003
	GRADIENT	.00246	.00004	-.00315	-.00044	-.00040	.00067	.00244	.00030	-.00032	.00071

CA20 (747/1 02 S1) - (747/1) D/S (139 - 036) (UGN139) (25 NOV 75)

REFERENCE DATA

SREF = 5500.0000 SQ.FT. XMRP = 1339.8000 IN.XC
LREF = 327.7800 IN. YMRP = .0000 IN.YC
BREF = 2348.0400 IN. ZMRP = 190.8000 IN.ZC
SCALE = .0300

PARAMETRIC DATA

ALPHAC = 4.000 BETAC = 5.000
ELV-IB = .000 ELV-OB = 3.000
ELEVON = 5.000 MACH = .600
PHI = .000 DX = .000
DY = 10.000 BETAO = .000

RUN NO. 0/ 0 RN/L = 3.25 GRADIENT INTERVAL = .00/ 12.00

ALPHAO	DZ	DCN	DCA	DCLM	DCY	DCBL	DCYN	DCL	DCD	DCSL	DCLN
10.000	.000	-.52631	.03859	.16627	-.10573	-.00830	.00723	-.51775	-.08003	-.00571	.00782
10.000	3.000	-.51418	.03815	.14494	-.10763	-.00859	.01218	-.50565	-.07928	-.00747	.01289
10.000	7.500	-.49795	.03785	.11548	-.11254	-.01107	.01793	-.48939	-.07850	-.00934	.01896
10.000	15.000	-.47747	.03543	.07613	-.11538	-.01359	.02261	-.46885	-.07807	-.01135	.02388
10.000	30.000	-.44792	.03285	.03634	-.11648	-.01614	.02631	-.43919	-.07755	-.01350	.02783
10.000	45.000	-.42909	.03126	.02233	-.11237	-.01686	.02563	-.42030	-.07716	-.01429	.02722
10.000	60.000	-.41002	.02970	.00799	-.10842	-.01760	.02499	-.40117	-.07672	-.01509	.02666
	GRADIENT	.00377	-.00021	-.00676	-.00092	-.00053	.00142	.00377	.00019	-.00048	.00147

CA20 (747/1 02 S1) - (747/1) D/S (140 - 036) (UGN140) (25 NOV 75)

REFERENCE DATA

SREF = 5500.0000 SQ.FT. XMRP = 1339.9000 IN.XC
LREF = 327.7800 IN. YMRP = .0000 IN.YC
BREF = 2348.0400 IN. ZMRP = 190.8000 IN.ZC
SCALE = .0300

PARAMETRIC DATA

ALPHAC =	40000	BETAC =	5.000
ELV-IB =	.000	ELV-OB =	3.000
ELEVON =	5.000	MACH =	.600
PHI =	.000	DX =	10.000
DY =	10.000	BETAO =	.000

RUN NO. 0/ 0 RN/L = 3.26 GRADIENT INTERVAL = .00/ 12.00

ALPHAO	DZ	DCN	DCA	DCLM	DCY	DCBL	DCYN	DCL	DCD	DCSL	DCLN
10.000	.000	-.49749	.03602	.15248	-.09712	-.00756	.00521	-.48883	-.07957	-.00707	.00634
10.000	3.000	-.48041	.03608	.13664	-.09989	-.00938	.01068	-.48179	-.07877	-.00641	.01157
10.000	7.500	-.47937	.03523	.11043	-.10658	-.01170	.01693	-.47072	-.07846	-.01007	.01803
10.000	15.000	-.46221	.03404	.07566	-.11134	-.01359	.02180	-.45353	-.07785	-.01154	.02309
10.000	30.000	-.43723	.03160	.03599	-.11405	-.01630	.02598	-.42843	-.07767	-.01371	.02741
10.000	45.000	-.42104	.03032	.02389	-.10985	-.01682	.02490	-.41220	-.07725	-.01432	.02650
10.000	60.000	-.40672	.02941	.01834	-.10396	-.01684	.02249	-.39786	-.07666	-.01459	.02410
	GRADIENT	.00242	-.00011	-.00562	-.00128	-.00055	.00142	.00242	.00014	-.00040	.00147

CA20 (747/1 01 S1) - (747/1) D/S (143 - 035) (UGN143) (25 NOV 75)

REFERENCE DATA

SREF = 5500.0000 SQ.FT. XMRP = 1339.9000 IN.XC
LREF = 327.7800 IN. YMRP = .0000 IN.YC
BREF = 2348.0400 IN. ZMRP = 190.8000 IN.ZC
SCALE = .0300

PARAMETRIC DATA

ALPHAC =	4.000	BETAC =	.000
RUD-U =	15.000	RUD-L =	15.000
ELEVON =	5.000	AILRON =	.000
PHI =	.000	DX =	.000
DY =	.000	BETAO =	.000

RN/L = 3.27 GRADIENT INTERVAL = .00/ 12.00

ALPHAO = 10.000

DZ	DCN	DCA	DCLM	DCY	DCBL	DCYN	DCL	DCD	DCSL	DCLN
.000	-.17392	.01789	.14988	.04033	.00495	-.02380	-.17455	-.00156	.00250	-.02419
3.000	-.16579	.01801	.14342	.04272	.00505	-.02457	-.16746	-.00073	.00253	-.02495
7.500	-.15071	.01798	.11579	.04491	.00514	-.02552	-.15144	.00081	.00252	-.02591
15.000	-.13065	.01759	.09285	.04577	.00502	-.02591	-.13143	.00241	.00237	-.02618
30.000	-.10235	.01572	.06558	.04670	.00481	-.02604	-.10305	.00322	.00214	-.02639
45.000	-.08484	.01411	.05265	.04798	.00502	-.02654	-.08547	.00344	.00230	-.02701
60.000	-.06519	.01239	.03692	.04905	.00512	-.02708	-.06574	.00365	.00235	-.02746
GRADIENT	.00313	.00001	-.00467	.00060	.00003	-.00023	.00312	.00032	.00000	-.00023

CA20 (747/1 01 S1) - (747/1) D/S (143 - 035) (UGN143) (25 NOV 75)

REFERENCE DATA

SREF =	9500.0000 SQ.FT.	XMRP =	1339.9000 IN.XC		
LREF =	327.7800 IN.	YMRP =	.0000 IN.YC		
BREF =	2348.0400 IN.	ZMRP =	190.8000 IN.ZC		
SCALE =	.0300				

PARAMETRIC DATA

ALPHAC =	4.000	BETAC =	.000
RUD-U =	15.000	RUD-L =	15.000
ELEVON =	5.000	AILRON =	.000
PHI =	.000	DX =	.000
DY =	.000	BETAO =	.000

RN/L = 3.23 GRADIENT INTERVAL = .00/ 12.00

ALPHAO = 14.000

DZ	DCN	DCA	DCLM	DCY	DCBL	DCYN	DCL	DCD	DCSL	DCLN
.000	-.25700	.01542	.25967	.04346	.00591	-.02565	-.25698	-.01229	.00325	-.02613
3.000	-.24827	.01532	.24838	.04425	.00573	-.02559	-.24834	-.01092	.00309	-.02603
7.500	-.22803	.01713	.22066	.04451	.00563	-.02554	-.22932	-.00781	.00299	-.02593
15.000	-.19461	.01876	.16872	.04832	.00579	-.02734	-.19522	-.00275	.00297	-.02779
30.000	-.14836	.01764	.11261	.04741	.00516	-.02648	-.14909	.00091	.00244	-.02697
45.000	-.11663	.01618	.08307	.04777	.00518	-.02661	-.11933	.00218	.00245	-.02700
60.000	-.08830	.01492	.05326	.04831	.00522	-.02692	-.08946	.00346	.00248	-.02722
GRADIENT	.00377	.00023	-.00528	.00013	-.00004	.00002	.00373	.00060	-.00003	.00002

CA20 (747/1 02 S1) - (747/1) D/S (144 - 035) (UGN144) (25 NOV 75)

REFERENCE DATA

SREF =	9500.0000 SQ.FT.	XMRP =	1339.9000 IN.XC		
LREF =	327.7800 IN.	YMRP =	.0000 IN.YC		
BREF =	2348.0400 IN.	ZMRP =	190.8000 IN.ZC		
SCALE =	.0300				

PARAMETRIC DATA

ALPHAC =	4.000	BETAC =	.000
RUD-U =	15.000	RUD-L =	15.000
ELEVON =	5.000	AILRON =	.000
PHI =	.000	DX =	.000
DY =	.000	BETAO =	.000

RN/L = 3.35 GRADIENT INTERVAL = -1.00/ 4.00

ALPHAO = 10.000

DZ	DCN	DCA	DCLM	DCY	DCBL	DCYN	DCL	DCD	DCSL	DCLN
.000	-.17246	.02010	.10240	.03985	.00481	-.02336	-.17332	.00082	.00241	-.02573
3.000	-.16179	.02015	.09355	.04216	.00490	-.02410	-.16271	.00192	.00242	-.02648
7.500	-.14611	.01982	.07679	.04451	.00511	-.02517	-.14705	.00315	.00253	-.02755
15.000	-.12731	.01894	.06426	.04634	.00513	-.02598	-.12827	.00416	.00248	-.02835
30.000	-.09923	.01679	.04971	.04796	.00500	-.02652	-.10009	.00477	.00229	-.02889
45.000	-.08268	.01503	.04076	.04949	.00520	-.02724	-.08343	.00462	.00242	-.02963
60.000	-.06389	.01317	.03085	.05097	.00533	-.02788	-.06453	.00459	.00248	-.02838
GRADIENT	.00356	.00001	-.00285	.00077	.00003	-.00025	.00354	.00037	.00000	-.00035

ORIGINAL PAGE IS
OF POOR QUALITY

CA20 (747/1 01 SI) - (747/1) D/S (145 - 035) (UGN145) (25 NOV 75)

REFERENCE DATA

SREF = 5500.0000 SQ.FT. XMRP = 1339.9000 IN.XC
LREF = 327.7800 IN. YMRP = .0000 IN.YC
BREF = 2348.0400 IN. ZMRP = 190.8000 IN.ZC
SCALE = .0300

PARAMETRIC DATA

ALPHAC = 4.000 BETAC = .000
ELEVON = .000 PHI = .000
DX = .000 DY = .000
BETAO = .000 ELV-IB = .000
ELV-OB = 3.000 MACH = .600

RN/L = 3.37 GRADIENT INTERVAL = .00/ 12.00

ALPHAO = 10.000

DZ	DCN	DCA	DCLM	DCY	DCBL	DCYN	DCL	DCD	DCSL	DCLN
.000	-.15175	.01753	.06998	.00140	.00076	-.00132	-.15246	.00837	.00091	-.00139
3.000	-.14511	.01716	.06692	.00134	.00061	-.00103	-.14581	.00867	.00050	-.00109
7.500	-.13278	.01647	.05406	.00056	.00036	-.00049	-.13347	.00120	.00030	-.00053
15.000	-.11380	.01479	.03925	.00008	.00011	.00026	-.11441	.00139	.00013	.00025
30.000	-.09085	.01243	.02597	-.00031	-.00018	.00045	-.09132	.00131	-.00014	.00047
45.000	-.07452	.01033	.02177	-.00005	-.00027	.00033	-.07486	.00085	-.00024	.00035
60.000	-.05702	.00824	.01578	-.00001	-.00042	.00026	-.05722	.00050	-.00040	.00030
GRADIENT	.00255	-.00014	-.00218	-.00013	-.00005	.00011	.00255	.00011	-.00004	.00012

RN/L = 3.36 GRADIENT INTERVAL = .00/ 12.00

ALPHAO = 14.000

DZ	DCN	DCA	DCLM	DCY	DCBL	DCYN	DCL	DCD	DCSL	DCLN
.000	-.23670	.01461	.18539	.00139	.00087	-.00165	-.23672	-.01099	.00069	-.00173
3.000	-.22836	.01518	.18891	.00066	.00061	-.00093	-.22847	-.00980	.00050	-.00099
7.500	-.20680	.01655	.15546	.00089	.00047	-.00080	-.20717	-.00598	.00038	-.00065
15.000	-.17522	.01651	.11246	.00026	.00033	-.00055	-.17572	-.00296	.00027	-.00053
30.000	-.13239	.01446	.07014	-.00056	-.00016	.00054	-.13287	-.00076	-.00011	.00055
45.000	-.10595	.01227	.04937	-.00012	-.00008	.00038	-.10634	-.00032	-.00005	.00038
60.000	-.07953	.01008	.02854	.00032	-.00000	.00020	-.07992	.00012	.00001	.00019
GRADIENT	.00405	.00028	-.00463	-.00006	-.00005	.00011	.00400	.00069	-.00004	.00011

CA20 (747/1 01 SI) - (747/1) D/S (146 - 035) (UGN146) (25 NOV 75)

REFERENCE DATA

SREF = 5500.0000 SQ.FT. XMRP = 1339.9800 IN.XC
LREF = 327.7800 IN. YMRP = .0000 IN.YC
BREF = 2348.0400 IN. ZMRP = 190.8000 IN.ZC
SCALE = .0300

PARAMETRIC DATA

ALPHAC =	4.000	BETAC =	.000
ELEVON =	10.000	PHI =	.000
DX =	.000	DY =	.000
BETAO =	.000	ELV-IB =	.000
ELV-OB =	3.000	MACH =	.600

RN/L = 3.33 GRADIENT INTERVAL = .00/ 12.00

ALPHAO = 10.000

DZ	DCN	DCA	DCLM	DCY	DCBL	DCYN	DCL	DCD	DCSL	DCLN
.000	-.19406	.01245	.20790	-.00045	.00027	-.00085	-.19404	-.00595	.00018	-.00089
3.000	-.18800	.01261	.19892	-.00073	.00013	-.00038	-.18803	-.00819	.00008	-.00039
7.500	-.17398	.01322	.17424	-.00114	-.00011	.00025	-.17412	-.00521	-.00009	.00023
15.000	-.14795	.01388	.12127	-.00091	-.00018	.00033	-.14825	-.00327	-.00015	.00034
30.000	-.11516	.01208	.07976	-.00063	-.00049	.00043	-.11546	-.00154	-.00045	.00047
45.000	-.09345	.01081	.05414	-.00043	-.00034	.00041	-.09372	-.00067	-.00031	.00044
60.000	-.07034	.00939	.02810	-.00029	-.00030	.00045	-.07057	.00018	-.00026	.00048
GRADIENT	.00271	.00011	-.00457	-.00009	-.00005	.00015	.00269	.00037	-.00004	.00015

RN/L = 3.27 GRADIENT INTERVAL = .00/ 12.00

ALPHAO = 14.000

DZ	DCN	DCA	DCLM	DCY	DCBL	DCYN	DCL	DCD	DCSL	DCLN
.000	-.27779	.00827	.32277	.00107	.00082	-.00178	-.27695	-.02147	.00082	-.00185
3.000	-.26905	.00933	.30304	.00084	.00051	-.00134	-.26841	-.01984	.00035	-.00139
7.500	-.25274	.01071	.27184	-.00029	.00030	-.00058	-.25227	-.01655	.00023	-.00061
15.000	-.21643	.01405	.21089	-.00059	-.00001	-.00006	-.21647	-.00969	-.00002	-.00006
30.000	-.16348	.01399	.13190	-.00120	-.00031	.00061	-.16375	-.00440	-.00025	.00064
45.000	-.12933	.01249	.08937	-.00086	-.00020	.00063	-.12960	-.00253	-.00014	.00064
60.000	-.09526	.01104	.04749	-.00047	-.00011	.00063	-.09554	-.00092	-.00005	.00064
GRADIENT	.00328	.00031	-.00680	-.00019	-.00007	.00016	.00331	.00065	-.00005	.00017

CA20 (747/1 01 S1) - (747/1) D/S (147 - 035) (UGN147) (25 NOV 75)

REFERENCE DATA

SREF = 5500.0000 SQ.FT. XMRP = 1339.9000 IN.XC
LREF = 327.7800 IN. YMRP = .0000 IN.YC
BREF = 2348.0400 IN. ZMRP = 190.8000 IN.ZC
SCALE = .0300

PARAMETRIC DATA

ALPHAC =	4.000	BETAC =	.000
ELEVON =	10.000	PHI =	.000
DX =	.000	DY =	.000
BETAO =	.000	ELV-IB =	.000
ELV-OB =	3.000		

RN/L = 1.89 GRADIENT INTERVAL = .00/ 12.00

ALPHAO = 10.000

DZ	DCN	DCA	DCLM	DCY	DCBL	DCYN	DCL	DCD	DCSL	DCLN
.000	-.22293	.00731	.17604	-.00378	.00049	-.00073	-.22224	-.01701	.00041	-.00078
3.000	-.21737	.00772	.16463	-.00411	.00023	-.00009	-.21675	-.01605	.00021	-.00012
7.500	-.20356	.00828	.13344	-.00429	-.00006	.00065	-.20306	-.01412	.00000	.00065
15.000	-.18135	.00867	.08593	-.00437	-.00012	.00107	-.18099	-.01153	-.00002	.00108
30.000	-.15411	.00809	.04599	-.00492	-.00039	.00128	-.15381	-.00941	-.00026	.00131
45.000	-.13407	.00678	.01853	-.00528	-.00058	.00147	-.13374	-.00874	-.00044	.00152
60.000	-.11283	.00582	-.00945	-.00572	-.00082	.00163	-.11248	-.00780	-.00066	.00171
GRADIENT	.00262	.00013	-.00578	-.00007	-.00007	.00018	.00260	.00039	-.00005	.00019

CA20 (747/1 01 S1) - (747/1) D/S (148 - 035) (UGN148) (25 NOV 75)

REFERENCE DATA

SREF = 5500.0000 SQ.FT. XMRP = 1339.9000 IN.XC
LREF = 327.7800 IN. YMRP = .0000 IN.YC
BREF = 2348.0400 IN. ZMRP = 190.8000 IN.ZC
SCALE = .0300

PARAMETRIC DATA

ALPHAC =	4.000	BETAC =	.000
ELEVON =	10.000	PHI =	.000
DX =	.000	DY =	.000
BETAO =	.000	ELV-IB =	.000
ELV-OB =	3.000		

RN/L = 3.54 GRADIENT INTERVAL = .00/ 12.00

ALPHAO = 10.000

DZ	DCN	DCA	DCLM	DCY	DCBL	DCYN	DCL	DCD	DCSL	DCLN
.000	-.19179	.01421	.26302	.00271	.00069	-.00175	-.19197	-.00695	.00051	-.00181
3.000	-.18393	.01485	.25058	.00264	.00046	-.00131	-.18420	-.00553	.00032	-.00135
7.500	-.16705	.01564	.22429	.00198	.00034	-.00070	-.16748	-.00309	.00026	-.00073
15.000	-.13657	.01615	.16715	.00208	.00011	-.00050	-.13719	.00044	.00005	-.00051
30.000	-.09865	.01532	.11840	.00276	.00005	-.00049	-.09936	.00335	-.00001	-.00050
45.000	-.07374	.01402	.09296	.00150	.00000	-.00006	-.07442	.00446	-.00001	-.00006
60.000	-.04755	.01275	.06646	.00060	-.00003	.00029	-.04821	.00571	-.00001	.00029
GRADIENT	.00334	.00019	-.00522	-.00010	-.00005	.00014	.00330	.00052	-.00003	.00014

CA20 (747/1 01 51) - (747/1) D/S (149 - 025) (UGN149) (25 NOV 75)

REFERENCE DATA

SREF =	5500.0000 SQ.FT.	XMRP =	1339.9000 IN.XC		
LREF =	327.7800 IN.	YMRP =	.0000 IN.YC		
BREF =	2348.0400 IN.	ZMRP =	190.8000 IN.ZC		
SCALE =	.0300				

PARAMETRIC DATA

ALPHAC =	4.000	BETAC =	.000
ELEVON =	5.000	PHI =	.000
DX =	.000	DY =	.000
BETAO =	.000	RUD-U =	.000
RUD-L =	.000		

RN/L = 3.34 GRADIENT INTERVAL = .00/ 12.00

ALPHAO = 10.000

DZ	DCN	DCA	DCLM	DCY	DCBL	DCYN	DCL	DCD	DCSL	DCLN
.000	-.17349	.01267	.15199	-.00845	.00508	-.00239	-.17363	-.00654	.00480	-.00289
3.000	-.16552	.01270	.14051	-.00822	.00434	-.00153	-.16559	-.00571	.00416	-.00197
7.500	-.15124	.01214	.12085	-.01257	.00229	.00110	-.15142	-.00485	.00338	.00075
15.000	-.12831	.01229	.08230	-.02319	.00051	.00353	-.12851	-.00254	.00137	.00243
30.000	-.10071	.01061	.05303	-.02283	-.00162	.01065	-.10095	-.00139	-.00054	.01076
45.000	-.08182	.01022	.03908	-.00919	-.00083	.00456	-.08213	.00018	-.00037	.00462
60.000	-.06109	.00557	.02293	.00212	-.00061	-.00003	-.06142	.00147	-.00022	-.00002
GRADIENT	.00299	-.00003	-.00428	-.00057	-.00024	.00047	.00293	.00022	-.00019	.00050

RN/L = 3.29 GRADIENT INTERVAL = .00/ 12.00

ALPHAO = 14.000

DZ	DCN	DCA	DCLM	DCY	DCBL	DCYN	DCL	DCD	DCSL	DCLN
.000	-.24559	.01174	.23923	-.00029	.00584	-.00744	-.24828	-.01497	.00584	-.00800
3.000	-.24353	.01174	.24444	-.00308	.00553	-.00549	-.24324	-.01447	.00493	-.00503
7.500	-.22383	.01223	.20541	-.00719	.00452	-.00251	-.22380	-.01135	.00424	-.00255
15.000	-.19324	.01323	.16302	-.01495	.00293	.00323	-.19293	-.00793	.00324	.00231
30.000	-.14546	.01245	.10045	-.02433	-.00059	.01059	-.14570	-.00397	.00050	.01069
45.000	-.11515	.01148	.06959	-.01641	-.00112	.00780	-.11543	-.00195	-.00032	.00797
60.000	-.08461	.01044	.03714	-.00978	-.00173	.00530	-.08492	.00001	-.00119	.00544
GRADIENT	.00329	.00016	-.00428	-.00091	-.00018	.00086	.00335	.00050	-.00011	.00067

ORIGINAL PAGE IS
OF POOR QUALITY

CA20 (747/1 01 S1 AT38 AT39) - (747/1 01 S1) (VGN045) (11 MAR 75)

REFERENCE DATA

SREF =	2690.0000 SQ.FT.	XMRP =	1109.0000 IN.XO
LREF =	474.8100 IN.	YMRP =	.0000 IN.YO
BREF =	936.6800 IN.	ZMRP =	375.0000 IN.ZO
SCALE =	.0300		

PARAMETRIC DATA

ALPHAC =	.000	BETAC =	.000
ELV-IB =	.000	ELV-OB =	3.000
ELEVON =	5.000	MACH =	.600
PHI =	.000	DX =	.000
DY =	.000	BETAO =	.000

RN/L = 3.23 GRADIENT INTERVAL = -1.00/ 4.00

ALPHAO = 8.000

DZ	DCN	DCA	DCLM	DCY	DCBL	DCYN	DCL	DCD	DCSL	DCLN
.000	.04763	-.00052	-.02173	-.00078	-.00057	.00027	.04695	.00513	-.00054	.00036
3.000	.02935	.00237	-.00793	.00001	-.00050	-.00001	.02843	.00540	-.00062	.00008
7.500	.02498	.00322	-.00469	.00066	-.00038	-.00029	.02400	.00559	-.00043	-.00022
15.000	.02327	.00371	-.00340	.00059	-.00038	-.00026	.02226	.00578	-.00044	-.00019
30.000	.02152	.00415	-.00150	.00022	-.00046	-.00030	.02046	.00594	-.00051	-.00022
45.000	.00087	.00716	.00886	.00042	-.00124	.00195	-.00037	.00673	-.00101	.00209
60.000	-.11592	.03798	.08287	.00920	-.00513	.01793	-.11997	.02443	-.00304	.01835
GRADIENT	-.00509	.00043	.00268	.00028	.00004	-.00016	-.00510	-.00030	.00001	-.00016

CA20 (747/1 01 S1 AT38 AT39) - (747/1 01 S1) (VGN046) (11 MAR 75)

REFERENCE DATA

SREF =	2690.0000 SQ.FT.	XMRP =	1109.0000 IN.XO
LREF =	474.8100 IN.	YMRP =	.0000 IN.YO
BREF =	936.6800 IN.	ZMRP =	375.0000 IN.ZO
SCALE =	.0300		

PARAMETRIC DATA

ALPHAC =	4.000	BETAC =	.000
ELV-IB =	.000	ELV-OB =	3.000
ELEVON =	5.000	MACH =	.600
PHI =	.000	DX =	.000
DY =	.000	BETAO =	.000

RN/L = 3.33 GRADIENT INTERVAL = -1.00/ 4.00

ALPHAO = 12.000

DZ	DCN	DCA	DCLM	DCY	DCBL	DCYN	DCL	DCD	DCSL	DCLN
.000	.07093	-.00419	-.00714	-.00219	-.00011	.00059	.07074	.00965	.00001	.00060
3.000	.05848	-.00253	.00141	-.00189	-.00026	.00075	.05918	.00872	-.00010	.00081
7.500	.05073	-.00151	.00652	-.00176	-.00030	.00088	.05939	.00918	-.00011	.00093
15.000	.05501	-.00161	.00414	-.00164	-.00015	.00080	.05460	.00997	.00002	.00083
30.000	.05469	-.00045	.00533	-.00138	-.00039	.00104	.05406	.01006	-.00017	.00111
45.000	.05530	-.00002	.00443	-.00072	-.00039	.00094	.05557	.01050	-.00018	.00101
60.000	.05515	.00012	.00341	.00086	-.00033	.00095	.05441	.00974	-.00009	.00101
GRADIENT	-.00399	.00039	.00231	.00012	-.00003	.00004	-.00399	-.00044	-.00002	.00004

CA20 (747/1 01 S1 AT38 AT39) - (747/1 01 S1) (VGN047) (11 MAR 75)

REFERENCE DATA

SREF =	2690.0000 SQ.FT.	XMRP =	1109.0000 IN.XO		
LREF =	474.8100 IN.	YMRP =	.0000 IN.YO		
BREF =	935.6800 IN.	ZMRP =	375.0000 IN.ZO		
SCALE =	.0300				

PARAMETRIC DATA

ALPHAC =	8.000	BETAC =	.000
ELV-IB =	.000	ELV-OB =	3.000
ELEVON =	5.000	MACH =	.600
PHI =	.000	DX =	.000
DY =	.000	BETAO =	.000

RN/L = 3.25 GRADIENT INTERVAL = -1.00/ 4.00

ALPHAO = 16.000

DZ	DCN	DCA	DCLM	DCY	DCBL	DCYN	DCL	DCD	DCSL	DCLN
.000	.10309	.00778	-.02197	-.00003	.00109	.00042	.09489	.04553	.00121	.00008
3.000	.07160	.01404	.00289	.00117	.00098	-.00014	.06289	.04305	.00096	-.00042
7.500	.06552	.01584	.00473	.00304	.00017	-.00090	.05750	.04312	-.00002	-.00094
15.000	.06409	.02032	.00411	.00571	-.00199	-.00203	.05394	.04548	-.00239	-.00149
30.000	.05537	.02501	.00189	.00736	-.00389	-.00288	.04509	.04862	-.00447	-.00182
45.000	.05262	.02661	.00112	.00819	-.00428	-.00269	.04090	.04972	-.00482	-.00157
60.000	.05231	.02385	-.00133	.00844	-.00470	-.00249	.04076	.04888	-.00533	-.00140
GRADIENT	-.00811	.00140	.00537	.00049	-.00004	-.00020	-.00818	-.00092	-.00009	-.00019

CA20 747/1 01 S1 AT38 AT39 DELTA BETA=(-5)-(0) (VGN048) (14 MAR 75)

REFERENCE DATA

SREF =	2690.0000 SQ.FT.	XMRP =	1109.0000 IN.XO		
LREF =	474.8100 IN.	YMRP =	.0000 IN.YO		
BREF =	935.6800 IN.	ZMRP =	375.0000 IN.ZO		
SCALE =	.0300				

PARAMETRIC DATA

ALPHAC =	4.000	BETAC =	-5.000
ELV-IB =	.000	ELV-OB =	3.000
ELEVON =	5.000	MACH =	.600
PHI =	.000	DX =	.000
DY =	.000	BETAO =	-5.000

RN/L = 3.34 GRADIENT INTERVAL = -1.00/ 4.00

ALPHAO = 12.000

DZ	DCN	DCA	DCLM	DCY	DCBL	DCYN	DCL	DCD	DCSL	DCLN
.000	.02656	-.01452	-.02356	.04655	.01225	.01704	.02910	-.00866	.01553	.01412
3.000	.02163	-.01445	-.02641	.04304	.00987	.01923	.02416	-.00963	.01355	.01676
7.500	.02537	-.01405	-.03211	.04491	.00744	.01690	.02774	-.00847	.01121	.01694
15.000	.02488	-.01260	-.03165	.04944	.00525	.01795	.02716	-.00813	.00885	.01646
30.000	.02523	-.01351	-.03233	.05252	.00400	.01734	.02751	-.00807	.00752	.01613
45.000	.02501	-.01350	-.03222	.05343	.00312	.01731	.02727	-.00801	.00665	.01628
60.000	.02567	-.01330	-.03222	.05303	.00263	.01701	.02787	-.00769	.00611	.01609
GRADIENT	-.00169	.00002	-.00095	-.00117	-.00079	.00073	-.00164	-.00033	-.00063	.00068

CA20 (747/1 01 S1) - (01 S1) D/S (049 - 010) (VGN049) (11 MAR 75)

REFERENCE DATA

SREF = 2690.0000 SQ.FT. XMRP = 1109.0000 IN.XO
LREF = 474.8100 IN. YMRP = .0000 IN.YO
BREF = 936.6800 IN. ZMRP = 375.0000 IN.ZO
SCALE = .0300

PARAMETRIC DATA

ALPHAC =	.000	BETAC =	.000
ELV-IB =	.000	ELV-OB =	3.000
ELEVON =	5.000	MACH =	.600
PHI =	.000	DX =	.000
DY =	.000	BETAO =	.000

RN/L = 3.24 GRADIENT INTERVAL = .00/ 12.00

ALPHAO = 6.000

DZ	DCN	DCA	DCLM	DCY	DCBL	DCYN	DCL	DCD	DCSL	DCLN
.000	-.07687	.00548	.05140	.00003	-.00087	-.00001	-.07702	-.00260	-.00087	.00009
3.000	-.06819	.00349	.03769	.00065	-.00066	-.00008	-.06619	-.00344	-.00057	-.00001
7.500	-.05810	.00297	.02967	.00087	-.00069	.00025	-.05809	-.00312	-.00066	.00032
15.000	-.04556	.00209	.01977	.00132	-.00057	.00039	-.04553	-.00268	-.00052	.00045
30.000	-.03303	.00361	.01216	.00266	-.00021	.00105	-.03323	.00014	-.00010	.00107
45.000	.02583	-.00389	-.02172	.00287	.00153	-.00325	.02610	-.00117	.00118	-.00340
60.000	.29355	-.05777	-.18404	-.01088	.01338	-.03524	.30295	-.02625	.00952	-.03644
GRADIENT	.00245	-.00032	-.00281	.00011	.00002	.00004	.00247	-.00006	.00003	.00003

RN/L = 3.31 GRADIENT INTERVAL = .00/ 12.00

ALPHAO = 10.000

DZ	DCN	DCA	DCLM	DCY	DCBL	DCYN	DCL	DCD	DCSL	DCLN
.000	-.03754	.00714	.07407	-.00042	-.00061	.00045	-.03821	.00051	-.00053	.00055
3.000	-.03126	.00331	.05620	-.00035	-.00029	.00029	-.03136	-.00217	-.00024	.00033
7.500	-.02772	.00190	.04233	.00009	-.00014	.00040	-.02763	-.00294	-.00007	.00042
15.000	-.02092	.00119	.02948	.00029	.00010	.00065	-.02081	-.00246	.00021	.00063
30.000	-.01404	.00145	.01739	.00155	.00026	.00082	-.01408	-.00102	.00040	.00077
45.000	-.00849	.00154	.00997	.00211	.00005	.00015	-.00863	.00005	.00008	.00014
60.000	.00934	.00034	-.00001	.00321	.00060	-.00211	.00913	.00196	.00022	-.00218
GRADIENT	.00127	-.00057	-.00414	.00007	.00006	-.00000	.00136	-.00044	.00006	-.00001

RN/L = 3.27 GRADIENT INTERVAL = .00/ 12.00

ALPHAO = 14.000

DZ	DCN	DCA	DCLM	DCY	DCBL	DCYN	DCL	DCD	DCSL	DCLN
.000	.01225	.01733	.05978	-.00049	-.00030	.00018	.00770	.01978	-.00025	.00025
3.000	.00786	.01403	.04968	-.00011	-.00020	.00007	.00423	.01551	-.00018	.00011
7.500	-.00045	.01087	.03780	.00082	-.00019	-.00017	-.00301	.01024	-.00023	-.00012
15.000	-.00760	.00943	.02644	.00091	-.00008	.00004	-.00965	.00731	-.00007	.00006
30.000	-.01160	.00952	.01564	.00157	.00003	.00018	-.01356	.00544	.00008	.00017
45.000	-.01402	.00947	.01039	.00284	-.00010	.00046	-.01590	.00590	.00001	.00047
60.000	-.02156	.01016	.00987	.00299	-.00040	.00204	-.02338	.00465	.00010	.00203
GRADIENT	-.00171	-.00088	-.00291	.00018	.00001	-.00005	-.00144	-.00126	.00000	-.00005

DATE 04 DEC 75 TABULATED SOURCE DATA - CA20

CA20 (747/1 01 S1) - (01 S1) D/S (050 - 010) (VGN050) (11 MAR 75)

REFERENCE DATA

SREF = 2680.0000 SQ.FT.	XMRP = 1109.0000 IN.XO		
LREF = 474.8100 IN.	YMRP = .0000 IN.YO		
EREF = 936.6800 IN.	ZMRP = 375.0000 IN.ZO		
SCALE = .0300			

PARAMETRIC DATA

ALPHAC =	.000	BETAC =	.000
ELV-IB =	.000	ELV-OB =	3.000
ELEVON =	5.000	MACH =	.600
PHI =	.000	DX =	10.000
DY =	.000	BETAO =	.000

RN/L = 3.25 GRADIENT INTERVAL = .00/ 12.00

ALPHAO = 6.000

DZ	DCN	DCA	DCLM	DCY	DCBL	DCYN	DCL	DCD	DCSL	DCLN
.000	-.09142	.00270	.03878	-.00072	-.00071	-.00022	-.09120	-.00697	-.00073	-.00015
3.000	-.08106	.00143	.02892	-.00032	-.00064	.00002	-.08076	-.00706	-.00064	.00009
7.500	-.06913	.00019	.01994	.00033	-.00053	-.00003	-.06877	-.00704	-.00053	.00003
15.000	-.05918	.00105	.01534	.00076	-.00045	.00005	-.05797	-.00504	-.00045	.00010
30.000	-.04075	.00202	.00842	.00081	-.00024	.00106	-.04074	-.00225	-.00013	.00108
45.000	.04097	-.01958	-.04635	-.00463	.00101	.00547	.04280	-.01528	.00168	.00533
60.000	.33350	-.12908	-.27038	-.03594	.00825	.02968	.34517	-.09351	.01131	.02855
GRADIENT	.00295	-.00033	-.00247	.00014	.00002	.00002	.00296	-.00002	.00003	.00002

RN/L = 3.25 GRADIENT INTERVAL = .00/ 12.00

ALPHAO = 10.000

DZ	DCN	DCA	DCLM	DCY	DCBL	DCYN	DCL	DCD	DCSL	DCLN
.000	-.07269	.00779	.06995	-.00125	-.00067	.00058	-.07293	-.00455	-.00056	.00069
3.000	-.06191	.00415	.05355	-.00043	-.00049	.00035	-.06169	-.00557	-.00042	.00043
7.500	-.05000	.00111	.03620	.00015	-.00027	.00021	-.04943	-.00759	-.00023	.00025
15.000	-.03970	.00034	.02508	.00049	-.00004	.00036	-.03924	-.00507	.00002	.00036
30.000	-.02694	.00138	.01467	.00139	.00007	.00074	-.02667	-.00330	.00020	.00071
45.000	-.01578	-.00003	.00597	.00152	-.00011	.00087	-.01551	-.00276	.00004	.00068
60.000	.00636	-.00646	-.01112	.00105	-.00021	.00157	.00738	-.00526	.00007	.00158
GRADIENT	.00299	-.00087	-.00445	.00018	.00005	-.00005	.00310	-.00034	.00004	-.00006

RN/L = 3.23 GRADIENT INTERVAL = .00/ 12.00

ALPHAO = 14.000

DZ	DCN	DCA	DCLM	DCY	DCBL	DCYN	DCL	DCD	DCSL	DCLN
.000	-.04692	.01319	.07327	-.00034	.00014	.00040	-.04872	.00145	.00023	.00035
3.000	-.04331	.01125	.06212	-.00002	.00016	.00020	-.04475	.00044	.00020	.00016
7.500	-.03724	.00833	.04342	.00017	.00023	.00005	-.03767	-.00287	.00024	-.00000
15.000	-.02320	.00659	.02855	.00015	.00050	.00030	-.02262	-.00227	.00059	.00017
30.000	-.02303	.00622	.01545	.00112	.00047	.00031	-.02385	.00047	.00053	.00018
45.000	-.02292	.00802	.01216	.00150	.00034	.00034	-.02418	.00224	.00042	.00025
60.000	-.03002	.01207	.01476	.00344	.00015	.00032	-.03205	.00445	.00023	.00028
GRADIENT	.00130	-.00093	-.00359	.00007	.00001	-.00004	.00148	-.00059	.00000	-.00005

CA20 (747/1 01 S1) - (01 S1) D/S (051 - 010) (VGN051) (11 MAR 75)

REFERENCE DATA

SREF = 2690.0000 SQ.FT.	XMRP = 1109.0000 IN.XO		
LREF = 474.8100 IN.	YMRP = .0000 IN.YO		
BREF = 936.6800 IN.	ZMRP = 375.0000 IN.ZO		
SCALE = .0300			

PARAMETRIC DATA

ALPHAC =	.000	BETAC =	.000
ELV-IB =	.000	ELV-OB =	3.000
ELEVON =	5.000	MACH =	.600
PHI =	.000	DX =	20.000
DY =	.000	BETAO =	.000

RN/L = 3.24 GRADIENT INTERVAL = .00/ 12.00

ALPHAO = 6.000

DZ	DCN	DCA	DCLM	DCY	DCBL	DCYN	DCL	DCD	DCSL	DCLN
.000	-.08003	-.00612	.00836	.00064	-.00073	-.00060	-.07895	-.01445	-.00079	-.00052
3.000	-.07659	-.00434	.00963	.00083	-.00046	-.00033	-.07571	-.01232	-.00050	-.00028
7.500	-.07006	-.00350	.00897	.00087	-.00040	-.00013	-.06931	-.01081	-.00041	-.00009
15.000	-.05903	-.00245	.00735	.00088	-.00037	.00017	-.05845	-.00861	-.00035	.00021
30.000	-.04363	-.00106	.00590	.00216	-.00043	.00055	-.04328	-.00562	-.00037	.00059
45.000	-.01349	.00952	.00900	.00085	.00093	.00219	-.01441	.00806	.00115	.00208
60.000	.05798	.04785	.03174	-.00729	.00590	.00757	.05265	.05366	.00665	.00691
GRADIENT	.00134	.00034	.00006	.00003	.00004	.00006	.00130	.00047	.00005	.00006

RN/L = 3.25 GRADIENT INTERVAL = .00/ 12.00

ALPHAO = 10.000

DZ	DCN	DCA	DCLM	DCY	DCBL	DCYN	DCL	DCD	DCSL	DCLN
.000	-.07213	-.00030	.03440	.00151	-.00012	-.00045	-.07099	-.01282	-.00020	-.00042
3.000	-.06670	-.00204	.02930	.00051	-.00036	-.00013	-.06534	-.01359	-.00037	-.00006
7.500	-.05904	-.00284	.02294	.00036	-.00036	.00001	-.05765	-.01305	-.00036	.00007
15.000	-.04925	-.00176	.01761	.00106	-.00013	.00013	-.04820	-.01028	-.00011	.00015
30.000	-.03461	-.00083	.01161	.00135	.00001	.00063	-.03394	-.00683	.00012	.00052
45.000	-.02496	-.00023	.00730	.00191	-.00023	.00065	-.02454	-.00455	-.00011	.00069
60.000	-.01095	-.00028	.00079	.00186	-.00037	.00115	-.01073	-.00217	-.00017	.00120
GRADIENT	.00174	-.00033	-.00152	-.00014	-.00003	.00006	.00177	-.00002	-.00002	.00006

RN/L = 3.28 GRADIENT INTERVAL = .00/ 12.00

ALPHAO = 14.000

DZ	DCN	DCA	DCLM	DCY	DCBL	DCYN	DCL	DCD	DCSL	DCLN
.000	-.05422	.00006	.02756	.00329	-.00155	-.00306	-.05263	-.01305	-.00225	-.00259
3.000	-.05285	-.00285	.02980	.00063	-.00028	-.00091	-.05059	-.01555	-.00049	-.00081
7.500	-.04979	-.00431	.02782	-.00076	.00056	.00041	-.04727	-.01623	.00064	.00027
15.000	-.04508	-.00126	.02201	.00011	.00055	.00029	-.04344	-.01213	.00061	.00015
30.000	-.03498	.00225	.01414	.00122	.00044	.00035	-.03449	-.00628	.00051	.00024
45.000	-.02927	.00344	.00965	.00140	.00030	.00035	-.02923	-.00374	.00037	.00027
60.000	-.02895	.00352	.00730	.00305	.00014	.00033	-.02894	-.00359	.00021	.00028
GRADIENT	.00060	-.00056	.00001	-.00052	.00027	.00045	.00072	-.00040	.00037	.00037

CA20 (747/1 01 S1) - (01 S1) D/S (052 - 010) (VGN052) (11 MAR 75)

REFERENCE DATA

SREF = 2690.0000 SQ.FT. XMRP = 1109.0000 IN.XO
LREF = 474.8100 IN. YMRP = .0000 IN.YO
BREF = 955.6800 IN. ZMRP = 375.0000 IN.ZO
SCALE = .0300

PARAMETRIC DATA

ALPHAC = 4.000 BETAC = .000
ELV-IB = .000 ELV-OB = 3.000
ELEVON = 5.000 MACH = .600
PHI = .000 DX = .000
DY = .000 BETAO = .000

RN/L = 3.22 GRADIENT INTERVAL = .00/ 12.00

ALPHAO = 6.000

DZ	DCN	DCA	DCLM	DCY	DCBL	DCYN	DCL	DCD	DCSL	DCLN
.000	-.18630	.00887	.03745	.00143	-.00075	-.00053	-.18627	-.01287	-.00080	-.00045
3.000	-.17449	.00869	.03290	.00147	-.00063	-.00028	-.17423	-.01159	-.00066	-.00021
7.500	-.16800	.00852	.02811	.00162	-.00059	-.00002	-.15722	-.01003	-.00059	.00004
15.000	-.13034	.00524	.02040	.00220	-.00046	-.00004	-.13039	-.00844	-.00046	.00001
30.000	-.09530	.00653	.01699	.00178	-.00015	.00133	-.09546	-.00346	-.00001	.00134
45.000	-.03689	.00334	.00244	.00291	.00049	.00120	-.03902	-.00074	.00061	.00114
60.000	.09371	-.01043	-.05451	.01414	-.00045	-.00516	.09727	-.00026	-.00099	-.00508
GRADIENT	.00350	-.00002	-.00123	.00003	.00002	.00007	.00378	.00038	.00003	.00006

RN/L = 3.24 GRADIENT INTERVAL = .00/ 12.00

ALPHAO = 10.000

DZ	DCN	DCA	DCLM	DCY	DCBL	DCYN	DCL	DCD	DCSL	DCLN
.000	-.15285	.01113	.05265	.00089	-.00097	-.00002	-.15246	-.01559	-.00096	.00014
3.000	-.14161	.00994	.04513	.00102	-.00086	-.00007	-.14118	-.01480	-.00085	.00008
7.500	-.12557	.00811	.03436	.00118	-.00064	-.00009	-.12507	-.01382	-.00064	.00002
15.000	-.10730	.00722	.02678	.00126	-.00038	.00020	-.10694	-.01142	-.00034	.00026
30.000	-.07869	.00674	.01857	.00161	-.00013	.00066	-.07866	-.00706	-.00001	.00067
45.000	-.05834	.00620	.01206	.00172	-.00028	.00043	-.05853	-.00403	-.00020	.00047
60.000	-.03065	.00475	.00189	.00259	-.00074	-.00028	-.03101	-.00064	-.00078	-.00014
GRADIENT	.00353	-.00040	-.00244	.00004	.00004	-.00001	.00365	.00023	.00004	-.00002

RN/L = 3.24 GRADIENT INTERVAL = .00/ 12.00

ALPHAO = 14.000

DZ	DCN	DCA	DCLM	DCY	DCBL	DCYN	DCL	DCD	DCSL	DCLN
.000	-.12412	.01372	.07573	-.00216	.00051	.00121	-.12375	-.01672	.00078	.00105
3.000	-.11613	.01015	.06008	-.00174	.00093	.00096	-.11514	-.01824	.00113	.00070
7.500	-.10598	.00780	.04580	-.00137	.00108	.00083	-.10472	-.01807	.00125	.00055
15.000	-.09367	.00781	.03555	-.00115	.00112	.00087	-.09272	-.01538	.00130	.00057
30.000	-.07124	.00765	.02238	-.00001	.00087	.00077	-.07097	-.00931	.00103	.00054
45.000	-.05993	.00815	.01656	-.00029	.00078	.00081	-.05012	-.00659	.00096	.00060
60.000	-.05468	.00803	.01301	-.00050	.00091	.00173	-.05500	-.00544	.00130	.00146
GRADIENT	.00241	-.00077	-.00393	.00010	.00007	-.00005	.00282	-.00016	.00006	-.00006

CA20 (747/1 01 S1) - (01 S1) D/S (053 - 010) (VGN053) (11 MAR 75)

REFERENCE DATA

SREF = 2690.0000 SQ.FT. XMRP = 1109.0000 IN.XO
LREF = 474.8100 IN. YMRP = .0000 IN.YO
BREF = 936.6900 IN. ZMRP = 375.0000 IN.ZO
SCALE = .0300

PARAMETRIC DATA

ALPHAC =	4.000	BETAC =	.000
ELV-IB =	.000	ELV-OB =	3.000
ELEVON =	5.000	MACH =	.600
PHI =	.000	DX =	10.000
DY =	.000	BETAO =	.000

RN/L = 3.27 GRADIENT INTERVAL = .00/ 12.00

ALPHAO = 6.000

DZ	DCN	DCA	DCLM	DCY	DCBL	DCYN	DCL	DCD	DCSL	DCLN
.000	-.19593	.00523	.02385	.00061	-.00061	-.00065	-.19541	-.01527	-.00057	-.00059
3.000	-.19170	.00446	.01925	.00039	-.00049	-.00040	-.18117	-.01456	-.00053	-.00034
7.500	-.16428	.00416	.01574	.00043	-.00051	-.00018	-.16381	-.01303	-.00053	-.00012
15.000	-.14053	.00434	.01298	.00108	-.00042	-.00010	-.14022	-.01037	-.00042	-.00005
30.000	-.09532	.00548	.01002	.00232	-.00027	.00021	-.09537	-.00451	-.00025	.00024
45.000	-.00925	.01039	-.00678	.01284	-.00352	-.00309	-.01028	.00937	-.00392	-.00269
60.000	.15282	.02632	-.04636	.04313	-.01475	-.01387	.14923	.04215	-.01612	-.01226
GRADIENT	.00419	-.00014	-.00106	-.00002	.00001	.00006	.00418	.00030	.00002	.00006

RN/L = 3.23 GRADIENT INTERVAL = .00/ 12.00

ALPHAO = 10.000

DZ	DCN	DCA	DCLM	DCY	DCBL	DCYN	DCL	DCD	DCSL	DCLN
.000	-.18228	.01349	.04780	-.00155	-.00081	-.00031	-.18186	-.01837	-.00085	-.00017
3.000	-.16463	.01033	.03421	-.00136	-.00059	-.00029	-.16392	-.01842	-.00062	-.00019
7.500	-.14679	.00874	.02575	-.00116	-.00047	-.00014	-.14608	-.01688	-.00049	-.00005
15.000	-.12427	.00763	.01933	-.00104	-.00020	.00012	-.12370	-.01406	-.00018	.00015
30.000	-.09135	.00681	.01366	-.00049	.00014	.00065	-.09114	-.00915	.00025	.00061
45.000	-.05743	.00632	.00871	.00052	-.00023	.00045	-.05751	-.00548	-.00015	.00048
60.000	-.04102	.00596	.00254	.00221	-.00107	.00005	-.04143	-.00125	-.00104	.00023
GRADIENT	.00467	-.00051	-.00286	.00005	.00004	.00002	.00471	.00021	.00005	.00002

RN/L = 3.23 GRADIENT INTERVAL = .00/ 12.00

ALPHAO = 14.000

DZ	DCN	DCA	DCLM	DCY	DCBL	DCYN	DCL	DCD	DCSL	DCLN
.000	-.16335	.00908	.07495	-.00619	.00155	.00196	-.16069	-.03071	.00198	.00153
3.000	-.14656	.00423	.05542	-.00573	.00199	.00181	-.14333	-.03137	.00236	.00128
7.500	-.12935	.00175	.04029	-.00557	.00250	.00164	-.12594	-.02959	.00287	.00118
15.000	-.10963	.00218	.02984	-.00539	.00288	.00189	-.10690	-.02441	.00325	.00113
30.000	-.08273	.00403	.01984	-.00329	.00204	.00149	-.08125	-.01610	.00234	.00055
45.000	-.05933	.00546	.01439	-.00292	.00166	.00140	-.05782	-.01123	.00195	.00095
60.000	-.05083	.00509	.01007	-.00218	.00140	.00203	-.05025	-.00977	.00165	.00163
GRADIENT	.00448	-.00094	-.00452	.00008	.00013	-.00002	.00457	.00017	.00012	-.00004

CA20 (747/1 01 S1) - (01 S1) D/S (054 - 010) (VGN054) (11 MAR 75)

REFERENCE DATA

SREF =	2890.0000 SQ.FT.	XMRP =	1109.0000 IN.XO		
LREF =	474.8100 IN.	YMRP =	.0000 IN.YO		
BREF =	936.6800 IN.	ZMRP =	375.0000 IN.ZO		
SCALE =	.0300				

PARAMETRIC DATA

ALPHAC =	4.000	BETAC =	.000
ELV-IB =	.000	ELV-OB =	3.000
ELEVON =	5.000	MACH =	.600
PHI =	.000	DX =	20.000
DY =	.000	BETAO =	.000

RN/L = 3.25 GRADIENT INTERVAL = .00/ 12.00

ALPHAO = 6.000

DZ	DCN	DCA	DCLM	DCY	DCBL	DCYN	DCL	DCD	DCSL	DCLN
.000	-.19449	.00165	.00837	.00045	-.00059	-.00081	-.19360	-.01859	-.00187	-.00075
3.000	-.18289	.00132	.00593	.00050	-.00050	-.00067	-.18123	-.01772	-.00157	-.00061
7.500	-.16559	.00129	.00431	.00062	-.00044	-.00046	-.16481	-.01603	-.00048	-.00041
15.000	-.14399	.00154	.00525	.00094	-.00041	-.00010	-.14339	-.01312	-.00042	-.00005
30.000	-.10552	.00221	.00525	.00174	-.00015	.00038	-.10518	-.00884	-.00011	.00039
45.000	-.06770	.00570	.01228	.00392	-.00090	.00080	-.06792	-.00141	-.00081	.00069
60.000	-.03519	.02555	.06591	.00681	-.00452	.00319	-.03757	.01974	-.00416	.00355
GRADIENT	.00354	-.00005	-.00053	.00002	.00002	.00005	.00382	.00036	.00002	.00004

RN/L = 3.27 GRADIENT INTERVAL = .00/ 12.00

ALPHAO = 10.000

DZ	DCN	DCA	DCLM	DCY	DCBL	DCYN	DCL	DCD	DCSL	DCLN
.000	-.17554	.00819	.02080	-.00115	-.00059	-.00054	-.17863	-.02318	-.00058	-.00043
3.000	-.16377	.00773	.01713	-.00103	-.00048	-.00046	-.16755	-.02169	-.00055	-.00037
7.500	-.15378	.00795	.01344	-.00095	-.00039	-.00029	-.15282	-.01887	-.00044	-.00022
15.000	-.13070	.00709	.00954	-.00076	-.00019	.00001	-.12995	-.01572	-.00018	.00004
30.000	-.09774	.00663	.00791	.00020	-.00018	.00030	-.09741	-.01044	-.00013	.00033
45.000	-.07581	.00597	.00641	.00087	-.00032	.00044	-.07559	-.00738	-.00023	.00049
60.000	-.05827	.00603	.00875	.00075	-.00055	.00107	-.05843	-.00418	-.00036	.00115
GRADIENT	.00348	-.00003	-.00097	.00003	.00003	.00003	.00343	.00059	.00003	.00003

RN/L = 3.27 GRADIENT INTERVAL = .00/ 12.00

ALPHAO = 14.000

DZ	DCN	DCA	DCLM	DCY	DCBL	DCYN	DCL	DCD	DCSL	DCLN
.000	-.15843	-.00429	.03069	-.00434	.00002	.00116	-.15269	-.04249	.00030	.00112
3.000	-.15632	-.00270	.03203	-.00451	.00023	.00135	-.15103	-.04044	.00055	.00127
7.500	-.14235	-.00208	.02756	-.00472	.00093	.00160	-.13762	-.03545	.00129	.00133
15.000	-.12012	-.00154	.02089	-.00507	.00218	.00207	-.11618	-.03055	.00261	.00148
30.000	-.08649	-.00007	.01471	-.00461	.00372	.00241	-.08390	-.02093	.00419	.00144
45.000	-.05579	.00123	.01014	-.00224	.00232	.00148	-.05413	-.01473	.00261	.00083
60.000	-.03642	.00278	.00429	.00124	.00065	.00077	-.03541	-.01065	.00052	.00059
GRADIENT	.00222	.00028	-.00046	-.00005	.00012	.00006	.00289	.00081	.00013	.00003

ORIGINAL PAGE IS
OF POOR QUALITY

CA20 (747/1 01 S1) - (01 S1) D/S (055 - 010) (VGN055) (11 MAR 75)

REFERENCE DATA

SREF = 2690.0000 SQ.FT. XMRP = 1109.0000 IN.XO
LREF = 474.8100 IN. YMRP = .0000 IN.YO
BREF = 936.6800 IN. ZMRP = 375.0000 IN.ZO
SCALE = .0300

PARAMETRIC DATA

ALPHAC = 8.000 BETAC = .000
ELV-IB = .000 ELV-OB = 3.000
ELEVON = 5.000 MACH = .600
PHI = .000 DX = .000
DY = .000 BETAO = .000

RN/L = 3.22 GRADIENT INTERVAL = .00/ 12.00

ALPHAO = 6.000

DZ	DCN	DCA	DCLM	DCY	DCBL	DCYN	DCL	DCD	DCSL	DCLN
.000	-.35251	.00368	.00897	.00224	-.00117	-.00052	-.35096	-.03319	-.00122	-.00040
3.000	-.32137	.00440	.01764	.00211	-.00087	-.00039	-.32007	-.02921	-.00090	-.00029
7.500	-.29057	.00493	.01773	.00149	-.00073	-.00013	-.28950	-.02547	-.00074	-.00005
15.000	-.24409	.00532	.01771	.00188	-.00057	-.00018	-.24340	-.01922	-.00059	-.00012
30.000	-.17537	.00774	.01727	.00130	-.00035	.00105	-.17522	-.01064	-.00024	.00108
45.000	-.06679	.00741	.01364	.00228	.00239	-.00001	-.06720	.00039	.00236	-.00026
60.000	.19879	.00071	.01309	.01504	.01709	-.01043	.19762	.02149	.01591	-.0[illegible]16
GRADIENT	.00815	.00016	.00108	-.00010	.00006	.00005	.00808	.00101	.00006	.00005

RN/L = 3.25 GRADIENT INTERVAL = .00/ 12.00

ALPHAO = 10.000

DZ	DCN	DCA	DCLM	DCY	DCBL	DCYN	DCL	DCD	DCSL	DCLN
.000	-.31767	.01692	.04226	.00092	-.00153	-.00063	-.31607	-.03683	-.00162	-.00036
3.000	-.29215	.01682	.03543	.00059	-.00114	-.00055	-.29060	-.03435	-.00122	-.00035
7.500	-.26320	.01517	.03124	.00015	-.00095	-.00034	-.26183	-.03076	-.00100	-.00016
15.000	-.22086	.01389	.02603	.00024	-.00067	-.00011	-.21992	-.02469	-.00069	.00001
30.000	-.15992	.01215	.01951	.00012	-.00029	.00041	-.15960	-.01591	-.00022	.00046
45.000	-.11895	.01071	.01464	.00032	-.00021	.00039	-.11890	-.01009	-.00014	.00042
60.000	-.07476	.00820	.01043	.00114	.00060	.00019	-.07505	-.00490	.00062	.00008
GRADIENT	.00720	-.00045	-.00143	-.00010	.00007	.00004	.00717	.00031	.00008	.00003

RN/L = 3.27 GRADIENT INTERVAL = .00/ 12.00

ALPHAO = 14.000

DZ	DCN	DCA	DCLM	DCY	DCBL	DCYN	DCL	DCD	DCSL	DCLN
.000	-.28229	.01190	.07070	-.00264	-.00061	.00058	-.27678	-.05675	-.00043	.00031
3.000	-.25711	.00847	.05504	-.00295	-.00024	.00037	-.25152	-.05398	-.00003	.00090
7.500	-.23311	.00712	.04798	-.00379	.00017	.00128	-.22791	-.04549	.00047	.00120
15.000	-.19694	.00504	.03829	-.00454	.00140	.00184	-.19231	-.04276	.00181	.00145
30.000	-.14196	.00457	.02759	-.00428	.00260	.00224	-.13855	-.02691	.00297	.00157
45.000	-.10931	.00476	.01959	-.00427	.00257	.00210	-.10721	-.02183	.00300	.00141
60.000	-.09484	.00577	.01509	-.00377	.00223	.00259	-.09355	-.01633	.00279	.00197
GRADIENT	.00546	-.00061	-.00292	-.00016	.00010	.00008	.00542	.00097	.00012	.00005

CA20 (747/1 01 S1) - (01 S1) D/S (056 - 010) (VGNOSS) (11 MAR 75)

REFERENCE DATA

SREF =	2690.0000 SQ.FT.	XMRP =	1109.0000 IN.XO		
LREF =	474.8100 IN.	YMRP =	.0000 IN.YO		
BREF =	926.6800 IN.	ZMRP =	375.0000 IN.ZO		
SCALE =	.0300				

PARAMETRIC DATA

ALPHAC =	8.000	BETAC =	.000
ELV-IB =	.000	ELV-OB =	3.000
ELEVON =	5.000	MACH =	.600
PHI =	.000	DX =	10.000
DY =	.000	BETAO =	.000

RN/L = 3.30 GRADIENT INTERVAL = .00/ 12.00

ALPHAO = 6.000

DZ	DCN	DCA	DCLM	DCY	DCBL	DCYN	DCL	DCD	DCSL	DCLN
.000	-.24449	.00199	-.00895	.00007	-.00088	-.00099	-.34281	-.03903	-.00097	-.00079
3.000	-.32022	.00227	-.00294	.00010	-.00067	-.00074	-.31870	-.03121	-.00074	-.00057
7.500	-.29105	.00255	-.00152	.00047	-.00056	-.00062	-.28972	-.02789	-.00062	-.00055
15.000	-.24950	.00411	.00319	.00046	-.00042	-.00041	-.24866	-.02201	-.00046	-.00037
30.000	-.18559	.00540	.00609	.00035	-.00043	.00081	-.18523	-.01404	-.00034	.00055
45.000	-.11115	.00553	.01950	.00216	.00113	.00152	-.11112	-.00507	.00128	.00140
60.000	.00821	.00241	.05232	.00970	.00720	.00120	.00592	.00305	.00729	.00044
GRADIENT	.00707	.00007	.00084	.00006	.00004	.00003	.00703	.00081	.00005	.00003

RN/L = 3.24 GRADIENT INTERVAL = .00/ 12.00

ALPHAO = 10.000

DZ	DCN	DCA	DCLM	DCY	DCBL	DCYN	DCL	DCD	DCSL	DCLN
.000	-.33719	.01921	.02497	-.00143	-.00076	-.00089	-.33541	-.03963	-.00093	-.00055
3.000	-.31410	.01744	.02031	-.00150	-.00049	-.00066	-.31236	-.03737	-.00060	-.00057
7.500	-.28401	.01577	.01690	-.00146	-.00045	-.00045	-.28243	-.03379	-.00053	-.00037
15.000	-.23935	.01426	.01446	-.00111	-.00039	-.00018	-.23820	-.02752	-.00041	-.00011
30.000	-.17379	.01205	.01176	-.00057	-.00008	.00035	-.17324	-.01831	-.00001	.00035
45.000	-.13192	.01112	.01134	.00008	-.00015	.00033	-.13185	-.01195	-.00009	.00035
60.000	-.09559	.01051	.01204	.00014	-.00015	.00083	-.09595	-.00825	-.00001	.00085
GRADIENT	.00705	-.00045	-.00105	-.00000	.00004	.00005	.00703	.00078	.00005	.00004

RN/L = 3.23 GRADIENT INTERVAL = .00/ 12.00

ALPHAO = 14.000

DZ	DCN	DCA	DCLM	DCY	DCBL	DCYN	DCL	DCD	DCSL	DCLN
.000	-.32022	.01368	.05352	-.00356	-.00038	.00006	-.31402	-.06419	-.00035	.00015
3.000	-.28438	.01010	.04211	-.00381	.00001	.00026	-.28308	-.05142	.00010	.00035
7.500	-.26678	.00745	.03586	-.00413	.00034	.00055	-.26065	-.05731	.00046	.00045
15.000	-.22298	.00474	.02822	-.00492	.00083	.00130	-.21750	-.04935	.00093	.00111
30.000	-.16083	.00282	.02164	-.00428	.00132	.00205	-.15574	-.03518	.00177	.00167
45.000	-.12227	.00314	.01676	-.00448	.00218	.00229	-.12037	-.02677	.00267	.00170
60.000	-.10316	.00324	.01215	-.00322	.00210	.00274	-.10089	-.02181	.00270	.00215
GRADIENT	.00705	-.00081	-.00228	-.00007	.00009	.00006	.00703	.00092	.00011	.00004

CA20 (747/1 01 S11 - (01 S1) O/S (057 - 010) (VGN057) (11 MAR 75)

REFERENCE DATA

SREF =	2690.0000 SQ.FT.	XMRP =	1109.0000 IN.XO		
LREF =	474.8100 IN.	YMRP =	.0000 IN.YO		
BREF =	936.6800 IN.	ZMRP =	375.0000 IN.ZO		
SCALE =	.0300				

PARAMETRIC DATA

ALPHAC =	8.000	BETAC =	.000
ELV-IB =	.000	ELV-OB =	3.000
ELEVON =	5.000	MACH =	.600
PHI =	.000	DX =	20.000
DY =	.000	BETAO =	.000

RN/L = 3.24 GRADIENT INTERVAL = .00/ 12.00

ALPHAO = 6.000

DZ	DCN	DCA	DCLM	DCY	DCBL	DCYN	DCL	DCD	DCSL	DCLN
.000	-.33415	-.00139	-.02279	.00018	-.00081	-.00133	-.33218	-.03531	-.00095	-.00124
3.000	-.31410	-.00115	-.01925	.00028	-.00067	-.00108	-.31226	-.03398	-.00078	-.00101
7.500	-.28816	-.00056	-.01559	.00063	-.00059	-.00078	-.28652	-.03057	-.00066	-.00072
15.000	-.25263	.00075	-.00907	.00108	-.00042	-.00046	-.25173	-.02566	-.00047	-.00042
30.000	-.19072	.00293	.00040	.00151	-.00012	-.00001	-.18598	-.01703	-.00012	.00000
45.000	-.13303	.00643	.01335	.00013	-.00016	.00075	-.13289	-.00751	-.00008	.00076
60.000	-.12038	.01728	.04091	-.01307	-.00535	.00595	-.12153	.00460	-.00470	.00649
GRADIENT	.00610	.00011	.00095	.00006	.00003	.00007	.00606	.00075	.00004	.00007

RN/L = 3.27 GRADIENT INTERVAL = .00/ 12.00

ALPHAO = 10.000

DZ	DCN	DCA	DCLM	DCY	DCBL	DCYN	DCL	DCD	DCSL	DCLN
.000	-.33699	.01755	.00544	-.00117	-.00075	-.00130	-.33491	-.04123	-.00097	-.00115
3.000	-.31460	.01619	.00328	-.00132	-.00044	-.00090	-.31263	-.03969	-.00059	-.00081
7.500	-.28539	.01449	.00228	-.00052	-.00035	-.00079	-.28357	-.03529	-.00049	-.00071
15.000	-.24681	.01399	.00355	-.00072	-.00032	-.00049	-.24529	-.02904	-.00040	-.00043
30.000	-.17941	.01116	.00327	.00065	.00001	.00004	-.17862	-.02016	.00002	.00003
45.000	-.14107	.01138	.00835	.00083	-.00022	.00002	-.14090	-.01329	-.00022	.00005
60.000	-.11581	.01317	.01327	-.00072	-.00108	.00131	-.11555	-.00700	-.00084	.00148
GRADIENT	.00685	-.00041	-.00053	.00009	.00005	.00006	.00682	.00079	.00006	.00005

RN/L = 3.29 GRADIENT INTERVAL = .00/ 12.00

ALPHAO = 14.000

DZ	DCN	DCA	DCLM	DCY	DCBL	DCYN	DCL	DCD	DCSL	DCLN
.000	-.33133	.01188	.03014	-.00265	-.00035	-.00036	-.32436	-.06963	-.00042	-.00026
3.000	-.30816	.00942	.02376	-.00282	-.00013	-.00038	-.30128	-.06541	-.00015	-.00005
7.500	-.27730	.00632	.01742	-.00312	.00021	.00039	-.27059	-.06095	.00030	.00032
15.000	-.24042	.00475	.01873	-.00301	.00060	.00067	-.23442	-.05355	.00075	.00050
30.000	-.17859	.00197	.01650	-.00251	-.00013	.00151	-.17376	-.04130	.00024	.00149
45.000	-.13872	.00231	.01450	-.00395	.00131	.00226	-.13516	-.03131	.00182	.00188
60.000	-.11222	-.00051	.00923	-.00353	.00225	.00315	-.10876	-.02765	.00294	.00251
GRADIENT	.00718	-.00074	-.00167	-.00006	.00007	.00010	.00714	.00102	.00010	.00008

CA20 (747/1 01 S1) - (01 S1) D/S (058 - 010) (VGN058) (11 MAR 75)

REFERENCE DATA

SREF =	2690.0000 SQ.FT.	XMRP =	1109.0000 IN.XO		
LREF =	474.8100 IN.	YMRP =	.0000 IN.YO		
EREF =	936.6900 IN.	ZMRP =	375.0000 IN.ZO		
SCALE =	.0300				

PARAMETRIC DATA

ALPHAC =	4.000	BETAC =	.000
ELV-IB =	.000	ELV-OB =	3.000
ELEVON =	5.000	MACH =	.600
PHI =	.000	DX =	.000
DY =	10.000	BETAO =	.000

RN/L = 3.24 GRADIENT INTERVAL = .00/ 12.00

ALPHAO = 10.000

DZ	DCN	DCA	DCLM	DCY	DCBL	DCYN	DCL	DCD	DCSL	DCLN
.000	-.13660	.00540	.05009	.00189	-.00759	-.00307	-.13546	-.01640	-.00880	-.00171
3.000	-.12616	.00348	.04098	.00133	-.00600	-.00292	-.12485	-.01648	-.00642	-.00183
7.500	-.11680	.00325	.03617	.00035	-.00502	-.00223	-.11559	-.01708	-.00533	-.00132
15.000	-.09391	.00169	.02852	-.00036	-.00357	-.00124	-.09869	-.01569	-.00373	-.00060
30.000	-.07694	.00163	.02286	.00032	-.00209	.00028	-.07606	-.01176	-.00201	.00064
45.000	-.06036	.00112	.01691	.00148	-.00152	.00080	-.05954	-.00939	-.00136	.00105
60.000	-.04475	.00093	.01194	.00273	-.00101	.00094	-.04424	-.00691	-.00064	.00110
GRADIENT	.00260	-.00027	-.00179	-.00021	.00033	.00012	.00260	.00019	.00035	.00006

RN/L = 3.24 GRADIENT INTERVAL = .00/ 12.00

ALPHAO = 14.000

DZ	DCN	DCA	DCLM	DCY	DCBL	DCYN	DCL	DCD	DCSL	DCLN
.000	-.09448	.00548	.05161	-.00934	-.00376	.00254	-.09300	-.01754	-.00303	.00338
3.000	-.09465	.00432	.04641	-.00809	-.00159	.00139	-.09289	-.01870	-.00120	.00173
7.500	-.09348	.00439	.04109	-.00695	-.00007	.00062	-.09176	-.01835	.00008	.00061
15.000	-.08700	.00525	.03384	-.00555	-.00008	.00065	-.08568	-.01595	.00009	.00065
30.000	-.07293	.00705	.02539	-.00264	-.00018	.00110	-.07193	-.01069	.00012	.00111
45.000	-.05955	.00684	.01863	-.00047	-.00014	.00129	-.05945	-.00778	.00018	.00128
60.000	-.05065	.00693	.01284	.00168	-.00013	.00172	-.05082	-.00553	.00029	.00170
GRADIENT	.00014	.00013	-.00138	.00031	.00048	-.00025	.00017	-.00009	.00040	-.00035

CA20 (747/1 01 S1) - (01 S1) D/S (059 - 010) (VGN059) (11 MAR 75)

REFERENCE DATA

SREF =	2690.0000 SQ.FT.	XMRP =	1109.0000 IN.XO
LREF =	474.8100 IN.	YMRP =	.0000 IN.YO
BREF =	936.6800 IN.	ZMRP =	375.0000 IN.ZO
SCALE =	.0300		

PARAMETRIC DATA

ALPHAC =	4.000	BETAC =	.000
ELV-IB =	.000	ELV-OB =	3.000
ELEVON =	5.000	MACH =	.600
PHI =	.000	DX =	10.000
DY =	10.000	BETAO =	.000

RN/L = 3.32 GRADIENT INTERVAL = .00/ 12.00

ALPHAO = 10.000

DZ	DCN	DCA	DCLM	DCY	DCBL	DCYN	DCL	DCD	DCSL	DCLN
.000	-.15926	.00616	.03640	.00138	-.00693	-.00345	-.15791	-.02159	-.00742	-.00219
3.000	-.14881	.00440	.02955	.00086	-.00565	-.00325	-.14731	-.02150	-.00612	-.00222
7.500	-.13720	.00345	.02571	-.00040	-.00485	-.00223	-.13572	-.02042	-.00516	-.00135
15.000	-.11914	.00195	.02115	-.00014	-.00366	-.00166	-.11766	-.01877	-.00387	-.00090
30.000	-.08905	-.00009	.01552	-.00011	-.00214	.00014	-.08768	-.01556	-.00208	.00051
45.000	-.07165	-.00029	.01312	.00106	-.00161	.00072	-.07051	-.01272	-.00146	.00059
60.000	-.05625	.00035	.01203	.00254	-.00102	.00105	-.05546	-.00942	-.00082	.00121
GRADIENT	.00251	-.00035	-.00139	-.00024	.00027	.00017	.00293	.00016	.00029	.00012

RN/L = 3.25 GRADIENT INTERVAL = .00/ 12.00

ALPHAO = 14.000

DZ	DCN	DCA	DCLM	DCY	DCBL	DCYN	DCL	DCD	DCSL	DCLN
.000	-.13155	.00190	.05023	-.00623	-.00429	.00154	-.12810	-.02993	-.00379	.00253
3.000	-.12394	-.00080	.04094	-.00613	-.00158	.00083	-.12007	-.03076	-.00134	.00119
7.500	-.11411	-.00231	.03485	-.00621	.00003	.00102	-.11016	-.02995	.00028	.00093
15.000	-.10284	-.00076	.03187	-.00585	.00149	.00159	-.09950	-.02592	.00183	.00118
30.000	-.07930	.00109	.02269	-.00198	.00029	.00130	-.07721	-.01813	.00060	.00119
45.000	-.06548	.00210	.01649	-.00004	.00026	.00170	-.06404	-.01390	.00066	.00159
60.000	-.05256	.00203	.01240	.00240	-.00002	.00185	-.05149	-.01074	.00042	.00160
GRADIENT	.00231	-.00054	-.00200	.00000	.00056	-.00006	.00238	.00003	.00053	-.00019

CA20 (747/1 01 SI) - (01 SI) D/S (060 - 010) (VGN060) (11 MAR 75)

REFERENCE DATA

SREF =	2690.0000 SQ.FT.	XMRP =	1109.0000 IN.XO		
LREF =	474.8100 IN.	YMRP =	.0000 IN.YO		
BREF =	936.6800 IN.	ZMRP =	375.0000 IN.ZO		
SCALE =	.0300				

PARAMETRIC DATA

ALPHAC =	8.000	BETAC =	.000
ELV-IB =	.000	ELV-OB =	3.000
ELEVON =	5.000	MACH =	.600
PHI =	.000	DX =	.000
DY =	10.000	BETAO =	.000

RN/L = 3.23 GRADIENT INTERVAL = .00/ 12.00

ALPHAO = 10.000

DZ	DCN	DCA	DCLM	DCY	DCBL	DCYN	DCL	DCD	DCSL	DCLN
.000	-.28732	.01122	.03851	.00846	-.00989	-.00510	-.28490	-.03854	-.01063	-.00331
3.000	-.26527	.01044	.03513	.00511	-.00848	-.00460	-.26306	-.03579	-.00915	-.00305
7.500	-.24187	.01014	.03350	.00277	-.00718	-.00412	-.23995	-.03301	-.00779	-.00281
15.000	-.20397	.00821	.02892	.00027	-.00557	-.00293	-.20230	-.02733	-.00600	-.00192
30.000	-.14895	.00605	.02240	.00055	-.00378	-.00106	-.14873	-.02008	-.00391	-.00039
45.000	-.11783	.00549	.01887	.00091	-.00222	-.00002	-.11699	-.01506	-.00278	.00047
60.000	-.09505	.00519	.01679	.00152	-.00210	.00076	-.09763	-.01018	-.00194	.00112
GRADIENT	.00599	-.00014	-.00084	-.00074	.00036	.00013	.00593	.00090	.00037	.00006

RN/L = 3.20 GRADIENT INTERVAL = .00/ 12.00

ALPHAO = 14.000

DZ	DCN	DCA	DCLM	DCY	DCBL	DCYN	DCL	DCD	DCSL	DCLN
.000	-.26063	.00951	.06068	.00305	-.00979	-.00189	-.25512	-.05381	-.00995	.00054
3.000	-.24000	.00694	.05269	.00048	-.00720	-.00164	-.23455	-.05133	-.00738	.00016
7.500	-.21614	.00425	.04563	-.00230	-.00540	-.00102	-.21075	-.04817	-.00549	.00031
15.000	-.18652	.00406	.04216	-.00416	-.00285	.00011	-.18206	-.04120	-.00274	.00079
30.000	-.13741	.00269	.03105	-.00484	.00015	.00165	-.13398	-.03054	.00059	.00176
45.000	-.10437	.00237	.02361	-.00379	.00154	.00243	-.10184	-.02295	.00208	.00199
60.000	-.08256	.00254	.01866	-.00083	.00179	.00271	-.08072	-.01751	.00239	.00220
GRADIENT	.00597	-.00069	-.00197	-.00071	.00057	.00012	.00587	.00075	.00058	-.00003

ORIGINAL PAGE IS
OF POOR QUALITY

CA20 (747/1 01 SI) - (01 SI) D/S (061 - 010) (VGN061) (11 MAR 75)

REFERENCE DATA

SREF = 2690.0000 SQ.FT. XMRP = 1109.0000 IN.XO
LREF = 474.8100 IN. YMRP = .0000 IN.YO
BREF = 936.6800 IN. ZMRP = 375.0000 IN.ZO
SCALE = .0300

PARAMETRIC DATA

ALPHAC = 8.000 BETAC = .000
ELV-IB = .000 ELV-OB = 3.000
ELEVON = 5.000 MACH = .600
PHI = .000 DX = 10.000
DY = 10.000 BETAO = .000

RN/L = 3.28 GRADIENT INTERVAL = .00/ 12.00

ALPHAO = 10.000

DZ	DCN	DCA	DCLM	DCY	DCBL	DCYN	DCL	DCD	DCSL	DCLN
.000	-.31102	.01289	.02020	.00671	-.00871	-.00475	-.30854	-.04131	-.00940	-.00316
3.000	-.29245	.01209	.01893	.00433	-.00765	-.00450	-.29011	-.03888	-.00831	-.00310
7.500	-.26749	.01067	.01785	.00215	-.00658	-.00413	-.26528	-.03594	-.00720	-.00292
15.000	-.22724	.00817	.01562	.00010	-.00512	-.00283	-.22521	-.03141	-.00553	-.00189
30.000	-.17199	.00627	.01573	.00068	-.00353	-.00102	-.17046	-.02369	-.00365	-.00039
45.000	-.13862	.00554	.01557	.00167	-.00301	-.00027	-.13748	-.01861	-.00301	.00026
60.000	-.11256	.00550	.01703	.00315	-.00282	.00021	-.11181	-.01413	-.00274	.00070
GRADIENT	.00578	-.00030	-.00031	-.00060	.00028	.00008	.00575	.00071	.00029	.00003

RN/L = 3.26 GRADIENT INTERVAL = .00/ 12.00

ALPHAO = 14.000

DZ	DCN	DCA	DCLM	DCY	DCBL	DCYN	DCL	DCD	DCSL	DCLN
.000	-.28090	.00589	.04146	.00680	-.01009	-.00442	-.27398	-.06225	-.01086	-.00185
3.000	-.26192	.00405	.03683	.00507	-.00819	-.00433	-.25512	-.05943	-.00899	-.00222
7.500	-.23708	.00134	.03282	.00098	-.00703	-.00247	-.23036	-.05606	-.00742	-.00069
15.000	-.20412	-.00057	.02954	-.00187	-.00435	-.00084	-.19792	-.04994	-.00443	.00024
30.000	-.15272	-.00204	.02713	-.00292	-.00103	.00164	-.14769	-.03893	-.00061	.00184
45.000	-.11203	-.00460	.01972	-.00391	.00209	.00293	-.10759	-.03156	.00274	.00234
60.000	-.08764	-.00409	.01871	-.00093	.00330	.00342	-.08405	-.02517	.00403	.00252
GRADIENT	.00582	-.00061	-.00113	-.00079	.00040	.00027	.00579	.00082	.00045	.00017

CA20 (747/1 01 S1) - (01 S1) D/S (062 - 010) (VGN062) (11 MAR 75)

REFERENCE DATA

SREF =	2690.0000 SQ.FT.	XMRP =	1109.0000 IN.XO		
LREF =	474.8100 IN.	YMRP =	.0000 IN.YO		
BREF =	935.6800 IN.	ZMRP =	375.0000 IN.ZO		
SCALE =	.0300				

PARAMETRIC DATA

ALPHAC =	4.000	EETAC =	-5.000
ELV-IB =	.000	ELV-OB =	3.000
ELEVON =	5.000	MACH =	.600
PHI =	.000	DX =	.000
DY =	.000	BETAO =	.000

RN/L = 3.22 GRADIENT INTERVAL = .00/ 12.00

ALPHAO = 10.000

DZ	DCN	DCA	DCLM	DCY	DCBL	DCYN	DCL	DCD	DCSL	DCLN
.000	-.16743	.01197	.06244	-.01430	.00694	.00369	-.16696	-.01729	.00747	.00243
3.000	-.14486	.00818	.04394	-.01030	.00480	.00293	-.14408	-.01710	.00523	.00205
7.500	-.13012	.00707	.03689	-.00525	.00365	.00207	-.12937	-.01563	.00396	.00141
15.000	-.10950	.00501	.02739	-.00174	.00238	.00176	-.10870	-.01408	.00265	.00132
30.000	-.08099	.00443	.01893	.00114	.00134	.00137	-.08052	-.00970	.00156	.00112
45.000	-.06204	.00360	.01238	.00178	.00057	.00074	-.06172	-.00722	.00069	.00063
60.000	-.04[illegible]	.00259	.00441	.00265	-.00064	.00017	-.04041	-.00450	-.00060	.00028
GRADIENT	.00464	-.00062	-.00326	.00120	-.00042	-.00021	.00487	.00023	-.00045	-.00014

RN/L = 3.23 GRADIENT INTERVAL = .00/ 12.00

ALPHAO = 14.000

DZ	DCN	DCA	DCLM	DCY	DCBL	DCYN	DCL	DCD	DCSL	DCLN
.000	-.13126	.01929	.07690	-.01239	.00768	.00286	-.13203	-.01303	.00814	.00092
3.000	-.11572	.01436	.05650	-.01123	.00556	.00323	-.11575	-.01406	.00617	.00179
7.500	-.10512	.01145	.04345	-.00736	.00385	.00245	-.10477	-.01432	.00433	.00144
15.000	-.09403	.01086	.03470	-.00314	.00262	.00154	-.09386	-.01221	.00292	.00086
30.000	-.07091	.01026	.02230	.00003	.00165	.00120	-.07129	-.00720	.00190	.00076
45.000	-.05938	.00994	.01539	.00027	.00129	.00106	-.05711	-.00393	.00151	.00071
60.000	-.04631	.00902	.01003	.00118	.00110	.00146	-.04712	-.00245	.00142	.00115
GRADIENT	.00340	-.00101	-.00459	.00069	-.00050	-.00006	.00354	-.00016	-.00050	.00006

CA20 (747/1 01 S1) - (01 S1) D/S (063 - 010) (VGN063) (11 MAR 75)

REFERENCE DATA

SREF =	2690.0000 SQ.FT.	XMRP =	1109.0000 IN.XO
LREF =	474.8100 IN.	YMRP =	.0000 IN.YO
BREF =	936.6900 IN.	ZMRP =	375.0000 IN.ZO
SCALE =	.0300		

PARAMETRIC DATA

ALPHAC =	4.000	BETAC =	-5.000
ELV-IB =	.000	ELV-OB =	3.000
ELEVON =	5.000	MACH =	.600
PHI =	.000	DX =	10.000
DY =	.000	BETAO =	.000

RN/L = 3.30 GRADIENT INTERVAL = .00/ 12.00

ALPHAO = 10.000

DZ	DCN	DCA	DCLM	DCY	DCBL	DCYN	DCL	DCD	DCSL	DCLN
.000	-.19480	.01429	.04864	-.01551	.00841	.00351	-.19402	-.01975	.00899	.00200
3.000	-.16918	.01037	.03011	-.01168	.00608	.00276	-.16841	-.01917	.00646	.00166
7.500	-.15131	.00797	.02271	-.00719	.00467	.00197	-.15039	-.01843	.00494	.00113
15.000	-.12958	.00720	.01811	-.00375	.00316	.00167	-.12886	-.01541	.00340	.00110
30.000	-.09474	.00562	.01137	-.00113	.00183	.00154	-.09427	-.01092	.00207	.00120
45.000	-.07358	.00521	.00803	.00016	.00078	.00097	-.07337	-.00764	.00094	.00082
60.000	-.05629	.00525	.00621	.00108	-.00022	.00081	-.05535	-.00460	-.00007	.00084
GRADIENT	.00565	-.00082	-.00331	.00110	-.00048	-.00020	.00571	.00018	-.00051	-.00012

RN/L = 3.27 GRADIENT INTERVAL = .00/ 12.00

ALPHAO = 14.000

DZ	DCN	DCA	DCLM	DCY	DCBL	DCYN	DCL	DCD	DCSL	DCLN
.000	-.17689	.01692	.08179	-.01372	.00973	.00320	-.17573	-.02637	.01021	.00075
3.000	-.14766	.01015	.05286	-.01290	.00782	.00332	-.14573	-.02587	.00839	.00133
7.500	-.12809	.00696	.03674	-.00974	.00591	.00269	-.12691	-.02457	.00639	.00117
15.000	-.11369	.00693	.02934	-.00588	.00365	.00191	-.11199	-.02078	.00400	.00097
30.000	-.08281	.00682	.01821	-.00343	.00308	.00179	-.08195	-.01361	.00342	.00100
45.000	-.06579	.00762	.01385	-.00261	.00235	.00152	-.06568	-.00853	.00264	.00090
60.000	-.05368	.00768	.00991	-.00083	.00155	.00172	-.05399	-.00534	.00193	.00129
GRADIENT	.00620	-.00129	-.00592	.00054	-.00050	-.00008	.00632	.00024	-.00051	.00005

CA20 (747/1 01 S1) - (01 S1) D/S (064 - 010) (VGN064) (11 MAR 75)

REFERENCE DATA

SREF =	2850.0000 SQ.FT.	XMRP =	1109.0000 IN.XO		
LREF =	474.8100 IN.	YMRP =	.0000 IN.YO		
BREF =	935.6900 IN.	ZMRP =	375.0000 IN.ZO		
SCALE =	.0300				

PARAMETRIC DATA

ALPHAC =	4.000	BETAC =	-5.000
ELV-IB =	.000	ELV-OB =	3.000
ELEVON =	5.000	MACH =	.600
PHI =	.000	DX =	20.000
DY =	.000	BETAO =	.000

RN/L = 3.30 GRADIENT INTERVAL = .00/ 12.00

ALPHAO = 10.000

DZ	DCN	DCA	DCLM	DCY	DCBL	DCYN	DCL	DCD	DCSL	DCLN
.000	-.16501	.01123	.02227	-.00524	.00571	-.00141	-.1	-.02177	.00635	-.00255
3.000	-.17457	.00970	.01644	-.00463	.00554	-.00074	-.17[illegible]0	-.02076	.00532	-.00169
7.500	-.19337	.00743	.00858	-.00405	.00385	.00046	-.15233	-.01932	.00383	-.00022
15.000	-.13573	.00747	.01034	-.00196	.00242	.00063	-.13497	-.01621	.00249	.00020
30.000	-.10267	.00540	.01015	-.00002	.00092	.00093	-.10223	-.01152	.00107	.00076
45.000	-.08064	.00541	.00808	.00147	.00018	.00081	-.08035	-.00858	.00032	.00077
60.000	-.05773	.00353	.00393	.00264	-.00057	.00090	-.05746	-.00655	-.00051	.00100
GRADIENT	.00475	-.00051	-.00181	.00016	-.00038	.00025	.00476	.00033	-.00033	.00031

RN/L = 3.30 GRADIENT INTERVAL = .00/ 12.00

ALPHAO = 14.000

DZ	DCN	DCA	DCLM	DCY	DCBL	DCYN	DCL	DCD	DCSL	DCLN
.000	-.15953	.00081	.02981	-.00713	.00688	.00005	-.15489	-.03781	.00669	-.00161
3.000	-.14643	-.00048	.02611	-.00638	.00638	.00037	-.14391	-.03638	.00628	-.00118
7.500	-.13646	-.00061	.02348	-.00612	.00570	.00105	-.13228	-.03361	.00578	-.00035
15.000	-.11671	-.00084	.01943	-.00571	.00492	.00203	-.11304	-.02905	.00526	.00078
30.000	-.08885	.00199	.01659	-.00390	.00425	.00235	-.08669	-.01957	.00469	.00125
45.000	-.07118	.00398	.01341	-.00107	.00223	.00131	-.07000	-.01346	.00248	.00073
60.000	-.05041	.00604	.01101	.00262	.00015	.00102	-.06008	-.00875	.00039	.00055
GRADIENT	.00304	-.00018	-.00082	.00013	-.00016	.00013	.00300	.00056	-.00012	.00017

ORIGINAL PAGE IS
OF POOR QUALITY

CA20 (747/1 01 S1) - (01 S1) D/S (055 - 010) (VGN065) (11 MAR 75)

REFERENCE DATA

SREF =	2690.0000 SQ.FT.	XMRP =	1109.0000 IN.XO		
LREF =	474.8100 IN.	YMRP =	.0000 IN.YO		
BREF =	936.6800 IN.	ZMRP =	375.0000 IN.ZO		
SCALE =	.0300				

PARAMETRIC DATA

ALPHAC =	8.000	SETAC =	-5.000
ELV-IB =	.000	ELV-OB =	3.000
ELEVON =	5.000	MACH =	.600
PHI =	.000	DX =	.000
DY =	.000	BETAO =	.000

RN/L = 3.22 GRADIENT INTERVAL = .00/ 12.00

ALPHAO = 10.000

DZ	DCN	DCA	DCLM	DCY	DCBL	DCYN	DCL	DCD	DCSL	DCLN
.000	-.32876	.01826	.03895	-.02030	.00805	-.00023	-.32694	-.03910	.00789	-.00163
3.000	-.29872	.01699	.03408	-.01470	.00574	.00046	-.29711	-.03525	.00574	-.00054
7.500	-.26779	.01557	.03050	-.00920	.00426	.00079	-.26642	-.03117	.00434	.00004
15.000	-.22241	.01310	.02378	-.00416	.00239	.00102	-.22130	-.02572	.00253	.00059
30.000	-.16229	.01136	.01889	-.00078	.00118	.00102	-.16180	-.01700	.00134	.00080
45.000	-.12350	.00991	.01316	.00005	.00033	.00057	-.12334	-.01169	.00043	.00050
60.000	-.09009	.00908	.00932	.00136	-.00048	.00082	-.09029	-.00670	-.00033	.00069
GRADIENT	.00803	-.00035	-.00122	.00146	-.00049	.00013	.00797	.00105	-.00046	.00021

RN/L = 3.23 GRADIENT INTERVAL = .00/ 12.00

ALPHAO = 14.000

DZ	DCN	DCA	DCLM	DCY	DCBL	DCYN	DCL	DCD	DCSL	DCLN
.000	-.29266	.01484	.07322	-.02583	.00895	.00342	-.28756	-.05540	.00941	.00118
3.000	-.25774	.01028	.05285	-.01956	.00646	.00301	-.25257	-.05237	.00700	.00135
7.500	-.23253	.00863	.04659	-.01354	.00491	.00271	-.22771	-.04788	.00542	.00144
15.000	-.19730	.00806	.03971	-.00921	.00451	.00293	-.19339	-.03991	.00508	.00175
30.000	-.14053	.00691	.02753	-.00457	.00359	.00254	-.13802	-.02730	.00420	.00158
45.000	-.10761	.00710	.01989	-.00425	.00319	.00212	-.10613	-.01915	.00361	.00129
60.000	-.08399	.00699	.01429	-.00238	.00266	.00255	-.08319	-.01353	.00320	.00183
GRADIENT	.00783	-.00079	-.00338	.00162	-.00051	-.00009	.00779	.00113	-.00052	.00003

CA20 (747/1 01 S1) - (01 S1) D/S (056 - 010) (VGN069) (11 MAR 75)

REFERENCE DATA

SREF =	2690.0000 SQ.FT.	XMRP =	1169.0000 IN.XO
LREF =	474.8100 IN.	YMRP =	.0000 IN.YO
BREF =	936.6800 IN.	ZMRP =	375.0000 IN.ZO
SCALE =	.0300		

PARAMETRIC DATA

ALPHAC =	8.000	BETAC =	-5.000
ELV-IB =	.000	ELV-OB =	3.000
ELEVON =	5.000	MACH =	.600
PHI =	.000	DX =	10.000
DY =	.000	BETAO =	.000

RN/L = 3.24 GRADIENT INTERVAL = .00/ 12.00

ALPHAO = 10.000

DZ	DCN	DCA	DCLM	DCY	DCBL	DCYN	DCL	DCD	DCSL	DCLN
.000	-.33987	.01859	.01896	-.02648	.00882	-.00027	-.33793	-.04071	.00853	-.00179
3.000	-.31240	.01704	.01405	-.01600	.00705	.00060	-.31061	-.03746	.00705	-.00053
7.500	-.28436	.01591	.01418	-.01099	.00561	.00100	-.28280	-.03371	.00570	.00001
15.000	-.23659	.01366	.01046	-.00559	.00326	.00110	-.23734	-.02798	.00340	.00052
30.000	-.17459	.01220	.01039	-.00198	.00192	.00099	-.17405	-.01830	.00206	.00064
45.000	-.13234	.01115	.00878	-.00018	.00079	.00060	-.13227	-.01200	.00088	.00045
60.000	-.10054	.01113	.00876	.00125	-.00018	.00064	-.10124	-.00655	-.00006	.00055
GRADIENT	.00731	-.00035	-.00057	.00125	-.00042	.00016	.00726	.00092	-.00038	.00023

RN/L = 3.25 GRADIENT INTERVAL = .00/ 12.00

ALPHAO = 14.000

DZ	DCN	DCA	DCLM	DCY	DCBL	DCYN	DCL	DCD	DCSL	DCLN
.000	-.32415	.01569	.05148	-.02612	.01027	.00335	-.31837	-.06300	.01077	.00077
3.000	-.29190	.01159	.03704	-.02025	.00827	.00280	-.28603	-.05937	.00878	.00071
7.500	-.26559	.00959	.03289	-.01475	.00570	.00256	-.26004	-.05465	.00712	.00026
15.000	-.22428	.00702	.02841	-.00993	.00496	.00252	-.21932	-.04745	.00543	.00125
30.000	-.15983	.00560	.02179	-.00553	.00330	.00240	-.15547	-.03324	.00378	.00153
45.000	-.12005	.00549	.01652	-.00424	.00247	.00224	-.11781	-.02371	.00284	.00153
60.000	-.08295	.00465	.01414	-.00255	.00201	.00318	-.08161	-.01555	.00272	.00260
GRADIENT	.00765	-.00080	-.00234	.00149	-.00047	-.00010	.00762	.00108	-.00048	.00001

CA20 (747/1 01 S1) - (01 S1) D/S (067 - 010) (VGN067) (11 MAR 75)

REFERENCE DATA

SREF =	2690.0000 SQ.FT.	XMRP =	1109.0000 IN.XO		
LREF =	474.8100 IN.	YMRP =	.0000 IN.YO		
BREF =	936.6900 IN.	ZMRP =	375.0000 IN.ZO		
SCALE =	.0300				

PARAMETRIC DATA

ALPHAC =	8.000	BETAC =	-5.000
ELV-IB =	.000	ELV-OB =	3.000
ELEVON =	5.000	MACH =	.600
PHI =	.000	DX =	20.000
DY =	.000	BETAO =	.000

RN/L = 3.28 GRADIENT INTERVAL = .00/ 12.00

ALPHAO = 10.000

DZ	DCN	DCA	DCLM	DCY	DCBL	DCYN	DCL	DCD	DCSL	DCLN
.000	-.33793	.01702	.00136	-.01151	.00690	-.00219	-.33575	-.04192	.00541	-.00335
3.000	-.30873	.01462	-.00600	-.00981	.00526	-.00065	-.30659	-.03921	.00508	-.00145
7.500	-.28554	.01476	-.00042	-.00620	.00385	-.00022	-.28376	-.03505	.00375	-.00089
15.000	-.24623	.01350	.00352	-.00283	.00237	.00005	-.24484	-.02947	.00234	-.00035
30.000	-.18240	.01048	.00413	.00010	.00126	.00054	-.18145	-.02135	.00134	.00031
45.000	-.14169	.00986	.00727	.00175	.00027	.00031	-.14125	-.01490	.00032	.00026
60.000	-.11543	.01029	.01141	.00227	-.00061	.00033	-.11546	-.00991	-.00054	.00043
GRADIENT	.00694	-.00028	-.00012	.00072	-.00040	.00025	.00678	.00092	-.00035	.00031

RN/L = 3.29 GRADIENT INTERVAL = .00/ 12.00

ALPHAO = 14.000

DZ	DCN	DCA	DCLM	DCY	DCBL	DCYN	DCL	DCD	DCSL	DCLN
.000	-.31924	.01125	.02123	-.01363	.00732	-.00055	-.31248	-.06532	.00694	-.00241
3.000	-.30052	.00997	.01803	-.01183	.00599	.00031	-.29399	-.06313	.00598	-.00114
7.500	-.27298	.00805	.01506	-.00917	.00443	.00114	-.26682	-.05923	.00458	.00003
15.000	-.23656	.00559	.01700	-.00615	.00353	.00139	-.23089	-.05181	.00376	.00049
30.000	-.17557	.00189	.01719	-.00332	.00170	.00175	-.17081	-.04064	.00207	.00123
45.000	-.13085	.00124	.01569	-.00270	.00147	.00243	-.12726	-.03046	.00202	.00200
60.000	-.08605	-.00124	.01510	-.00238	.00247	.00404	-.09319	-.02202	.00357	.00332
GRADIENT	.00616	-.00042	-.00081	.00059	-.00038	.00023	.00608	.00108	-.00031	.00032

CA20 (747/1 01 S1) - (01 S1) D/S (069 - 010) (VGN069) (11 MAR 75)

REFERENCE DATA

SREF = 2690.0000 SQ.FT. XMRP = 1109.0000 IN.XO
LREF = 474.8100 IN. YMRP = .0000 IN.YO
BREF = 935.6800 IN. ZMRP = 375.0000 IN.ZO
SCALE = .0300

PARAMETRIC DATA

ALPHAC =	4.000	BETAC =	-5.000
ELV-IB =	.000	ELV-OB =	3.000
ELEVON =	5.000	MACH =	.600
PHI =	.000	DX =	.000
DY =	10.000	BETAO =	.000

RN/L = 3.29 GRADIENT INTERVAL = .00/ 12.00

ALPHAO = 10.000

DZ	DCN	DCA	DCLM	DCY	DCBL	DCYN	DCL	DCD	DCSL	DCLN
.000	-.13518	.00651	.04398	-.00519	-.00160	-.00112	-.13426	-.01707	-.00177	-.00003
3.000	-.12576	.00492	.03568	-.00550	-.00159	-.00064	-.12471	-.01700	-.00169	-.00035
7.500	-.11571	.00348	.03134	-.00416	-.00157	-.00041	-.11455	-.01667	-.00162	-.00013
15.000	-.10130	.00281	.02728	-.00259	-.00128	.00018	-.10026	-.01483	-.00123	.00040
30.000	-.07731	.00202	.02153	.00005	-.00088	.00092	-.07648	-.01144	-.00071	.00106
45.000	-.06055	.00115	.01634	.00143	-.00085	.00121	-.06013	-.00944	-.00062	.00134
60.000	-.04259	-.00022	.01071	.00269	-.00085	.00135	-.04190	-.00761	-.00061	.00149
GRADIENT	.00257	-.00040	-.00163	.00015	.00000	.00009	.00260	.00005	.00002	.00009

RN/L = 3.22 GRADIENT INTERVAL = .00/ 12.00

ALPHAO = 14.000

DZ	DCN	DCA	DCLM	DCY	DCBL	DCYN	DCL	DCD	DCSL	DCLN
.000	-.09713	.01155	.06265	-.01424	.00214	.00280	-.09704	-.01229	.00275	.00220
3.000	-.08865	.00714	.03739	-.01289	.00195	.00219	-.08794	-.01457	.00243	.00165
7.500	-.08940	.00573	.03166	-.01007	.00142	.00142	-.08813	-.01607	.00172	.00103
15.000	-.08844	.00695	.03190	-.00649	.00076	.00121	-.08846	-.01469	.00103	.00059
30.000	-.07331	.00728	.02444	-.00211	.00027	.00139	-.07290	-.01057	.00080	.00124
45.000	-.05977	.00703	.01785	.00012	.00017	.00160	-.05969	-.00764	.00055	.00152
60.000	-.05080	.00705	.01272	.00223	.00009	.00163	-.05059	-.00545	.00053	.00120
GRADIENT	.00094	-.00074	-.00269	.00055	-.00010	-.00018	.00109	-.00049	-.00014	-.00015

ORIGINAL PAGE IS
OF POOR QUALITY

CA20 (747/1 01 S1) - (01 S1) D/S (069 - 010) (VGN069) (11 MAR 75)

REFERENCE DATA

SREF = 2690.0000 SQ.FT.	XMRP = 1109.0000 IN.XO		
LREF = 474.8100 IN.	YMRP = .0000 IN.YO		
BREF = 936.6800 IN.	ZMRP = 375.0000 IN.ZO		
SCALE = .0300			

PARAMETRIC DATA

ALPHAC =	4.000	BETAC =	-5.000
ELV-IB =	.000	ELV-OB =	3.000
ELEVON =	5.000	MACH =	.600
PHI =	.000	DX =	10.000
DY =	10.000	BETAO =	.000

RN/L = 3.25 GRADIENT INTERVAL = .00/ 12.00

ALPHAO = 10.000

DZ	DCN	DCA	DCLM	DCY	DCBL	DCYN	DCL	DCD	DCSL	DCLN
.000	-.16267	.00684	.03320	-.00542	.00001	-.00120	-.16139	-.02151	-.00020	-.00118
3.000	-.14692	.00389	.02229	-.00581	-.00039	-.00066	-.14536	-.02168	-.00050	-.00058
7.500	-.13228	.00337	.02233	-.00409	-.00077	-.00054	-.13677	-.02069	-.00085	-.00040
15.000	-.11653	.00046	.01642	-.00282	-.00087	.00006	-.11484	-.01978	-.00085	.00021
30.000	-.09150	-.00048	.01534	-.00009	-.00075	.00084	-.09003	-.01635	-.00059	.00095
45.000	-.07351	-.00069	.01335	.00140	-.00083	.00109	-.07228	-.01345	-.00063	.00122
60.000	-.05369	-.00143	.01004	.00182	-.00071	.00108	-.05263	-.01073	-.00052	.00118
GRADIENT	.00315	-.00044	-.00133	.00019	-.00010	.00008	.00317	.00012	-.00009	.00010

RN/L = 3.25 GRADIENT INTERVAL = .00/ 12.00

ALPHAO = 14.000

DZ	DCN	DCA	DCLM	DCY	DCBL	DCYN	DCL	DCD	DCSL	DCLN
.000	-.13225	.00448	.04870	-.00974	.00369	.00149	-.12941	-.02765	.00394	.00055
3.000	-.11589	-.00048	.03119	-.01165	.00388	.00244	-.11233	-.02850	.00436	.00143
7.500	-.11015	-.00132	.02701	-.00999	.00363	.00232	-.10656	-.02793	.00408	.00139
15.000	-.10291	.00052	.02736	-.00643	.00295	.00201	-.09998	-.02439	.00336	.00124
30.000	-.08053	.00149	.02007	-.00177	.00106	.00173	-.07850	-.01804	.00144	.00142
45.000	-.06530	.00232	.01605	.00055	.00062	.00169	-.06392	-.01354	.00101	.00148
60.000	-.05488	.00264	.01241	.00283	.00016	.00180	-.05399	-.01071	.00059	.00171
GRADIENT	.00282	-.00073	-.00274	-.00000	-.00001	.00010	.00291	-.00002	.00001	.00010

DATE 04 DEC 75 TABULATED SOURCE DATA - CA20

CA20 (747/1 01 S1) - (01 S1) D/S (070 - 010) (VGN070) (11 MAR 75)

REFERENCE DATA

SREF =	2690.0000 SQ.FT.	XMRP =	1109.0000 IN.XO
LREF =	474.8100 IN.	YMRP =	.0000 IN.YO
EREF =	936.6900 IN.	ZMRP =	375.0000 IN.ZO
SCALE =	.0300		

PARAMETRIC DATA

ALPHAC =	8.000	BETAC =	-5.000
ELV-IB =	.000	ELV-OB =	3.000
ELEVON =	9.000	MACH =	.600
PHI =	.000	DX =	.000
DY =	10.000	BETAO =	.000

RN/L = 3.28 GRADIENT INTERVAL = .00/ 12.00

ALPHAO = 10.000

DZ	DCN	DCA	DCLM	DCY	DCBL	DCYN	DCL	DCD	DCSL	DCLN
.000	-.28733	.01335	.03237	-.00353	-.00290	-.00398	-.28528	-.03575	-.00354	-.00341
3.000	-.26913	.01270	.03167	-.00396	-.00333	-.00354	-.26686	-.03405	-.00391	-.00301
7.500	-.24511	.01166	.03081	-.00333	-.00340	-.00312	-.24341	-.03108	-.00359	-.00248
15.000	-.20590	.00931	.02805	-.00283	-.00310	-.00185	-.20439	-.02659	-.00337	-.00129
30.000	-.15401	.00740	.02359	-.00029	-.00247	-.00044	-.15225	-.01946	-.00250	-.00001
45.000	-.11779	.00584	.01718	.00106	-.00199	.00019	-.11697	-.01549	-.00193	.00053
60.000	-.08372	.00314	.01240	.00241	-.00172	.00086	-.08289	-.01145	-.00155	.00115
GRADIENT	.00559	-.00023	-.00021	.00004	-.00006	.00011	.00554	.00075	-.00004	.00012

RN/L = 3.21 GRADIENT INTERVAL = .00/ 12.00

ALPHAO = 14.000

DZ	DCN	DCA	DCLM	DCY	DCBL	DCYN	DCL	DCD	DCSL	DCLN
.000	-.24127	.00531	.04350	-.00930	-.00204	-.00072	-.23563	-.03225	-.00215	-.00021
3.000	-.22832	.00549	.03993	-.01012	-.00152	-.00037	-.22287	-.04991	-.00155	.00001
7.500	-.21393	.00508	.03981	-.00953	-.00135	.00022	-.20876	-.04691	-.00126	.00054
15.000	-.18532	.00359	.03579	-.00790	-.00065	.00099	-.18069	-.04135	-.00039	.00112
30.000	-.13845	.00327	.03029	-.00520	.00123	.00214	-.13513	-.03032	.00171	.00178
45.000	-.10521	.00319	.02387	-.00300	.00187	.00256	-.10393	-.02260	.00243	.00203
60.000	-.08465	.00318	.01765	-.00025	.00198	.00261	-.08290	-.01739	.00255	.00205
GRADIENT	.00392	-.00016	-.00046	-.00002	.00009	.00013	.00355	.00072	.00011	.00010

CA20 (747/1 01 S1) - (01 S1) D/S (071 - 010) (VGN071) (11 MAR 75)

REFERENCE DATA

SREF =	2690.0000 SQ.FT.	XMRP =	1109.0000 IN.XO		
LREF =	474.8100 IN.	YMRP =	.0000 IN.YO		
BREF =	936.6800 IN.	ZMRP =	375.0000 IN.ZO		
SCALE =	.0300				

PARAMETRIC DATA

ALPHAC =	8.000	BETAC =	-5.000
ELV-IB =	.000	ELV-OB =	3.000
ELEVON =	5.000	MACH =	.600
PHI =	.000	DX =	10.000
DY =	10.000	BETAD =	.000

RN/L = 3.25 GRADIENT INTERVAL = .00/ 12.00

ALPHAO = 10.000

DZ	DCN	DCA	DCLM	DCY	DCBL	DCYN	DCL	DCD	DCSL	DCLN
.000	-.31417	.01388	.01390	-.00419	-.00115	-.00325	-.31181	-.04088	-.00169	-.00300
3.000	-.29466	.01252	.01381	-.00406	-.00154	-.00309	-.29235	-.03884	-.00205	-.00278
7.500	-.26886	.01026	.01392	-.00356	-.00176	-.00265	-.26666	-.03599	-.00219	-.00231
15.000	-.23151	.00840	.01505	-.00264	-.00213	-.00159	-.22962	-.03094	-.00237	-.00119
30.000	-.17575	.00691	.01616	.00029	-.00189	-.00052	-.17428	-.02371	-.00195	-.00018
45.000	-.13568	.00473	.01345	.00201	-.00180	-.00012	-.13444	-.01830	-.00179	.00019
60.000	-.10341	.00371	.01386	.00354	-.00199	.00047	-.10248	-.01431	-.00189	.00081
GRADIENT	.00602	-.00040	.00001	.00009	-.00008	.00008	.00600	.00065	-.00006	.00009

RN/L = 3.25 GRADIENT INTERVAL = .00/ 12.00

ALPHAO = 14.000

DZ	DCN	DCA	DCLM	DCY	DCBL	DCYN	DCL	DCD	DCSL	DCLN
.000	-.27456	.00403	.02804	-.00736	-.00158	-.00160	-.26739	-.06251	-.00192	-.00117
3.000	-.25573	.00187	.02352	-.00749	-.00174	-.00124	-.24859	-.06005	-.00199	-.00078
7.500	-.23529	.00065	.02391	-.00542	-.00197	-.00069	-.22846	-.05629	-.00208	-.00019
15.000	-.20673	.00041	.02682	-.00563	-.00137	.00048	-.20059	-.04962	-.00121	.00090
30.000	-.15444	-.00165	.02395	-.00395	.00051	.00213	-.14940	-.03917	.00101	.00195
45.000	-.11671	-.00177	.02169	-.00313	.00237	.00287	-.11281	-.02936	.00299	.00222
60.000	-.08930	-.00233	.01768	-.00054	.00328	.00322	-.08512	-.02362	.00354	.00233
GRADIENT	.00518	-.00044	-.00050	.00013	-.00005	.00012	.00513	.00083	-.00002	.00013

DATE 04 DEC 75 TABULATED SOURCE DATA - CA20

CA20 (747/1 01 S1) - (01 S1) D/S (072 - 010) (VGN072) (11 MAR 75)

REFERENCE DATA

SREF =	2690.0000 SQ.FT.	XMRP =	1109.0000 IN.XO		
LREF. =	474.8100 IN.	YMRP =	.0000 IN.YO		
BREF =	935.6800 IN.	ZMRP =	375.0000 IN.ZO		
SCALE =	.0300				

PARAMETRIC DATA

ALPHAC =	4.000	BETAC =	5.000
ELV-IB =	.000	ELV-OB =	3.000
ELEVON =	5.000	MACH =	.600
PHI =	.000	DX =	.000
DY =	10.000	BETAO =	.000

RN/L = 3.28 GRADIENT INTERVAL = .00/ 12.00

ALPHAO = 10.000

DZ	DCN	DCA	DCLM	DCY	DCBL	DCYN	DCL	DCD	DCSL	DCLN
.000	-.15021	.00522	.05918	.00308	-.01327	-.00549	-.14901	-.01995	-.01419	-.00409
3.000	-.13469	.00409	.05293	.00259	-.01011	-.00529	-.13334	-.01935	-.01087	-.00345
7.500	-.11919	.00309	.04292	.00085	-.00809	-.00360	-.11791	-.01765	-.00859	-.00214
15.000	-.10200	.00316	.03595	-.00000	-.00550	-.00211	-.10100	-.01460	-.00578	-.00112
30.000	-.07175	.00113	.02416	-.00010	-.00310	-.00014	-.07085	-.01135	-.00307	.00040
45.000	-.05373	.00122	.01814	.00054	-.00200	.00059	-.05313	-.00813	- 00187	.00093
60.000	-.03773	.00185	.01360	.00142	-.00097	.00103	-.03748	-.00473	-.00078	.00118
GRADIENT	.00408	-.00040	-.00328	-.00030	.00057	.00038	.00409	.00031	.00073	.00028

RN/L = 3.22 GRADIENT INTERVAL = .00/ 12.00

ALPHAO = 14.000

DZ	DCN	DCA	DCLM	DCY	DCBL	DCYN	DCL	DCD	DCSL	DCLN
.000	-.11058	.00677	.07449	-.00974	-.01124	-.00024	-.10894	-.02019	-.01097	.00249
3.000	-.10543	.00485	.06412	-.00709	-.00742	-.00073	-.10347	-.02080	-.00738	.00109
7.500	-.09647	.00429	.05217	-.00064	-.00326	-.00020	-.09658	-.01955	-.00322	.00059
15.000	-.08539	.00494	.03994	-.00579	-.00123	.00021	-.08404	-.01566	-.00114	.00050
30.000	-.06784	.00765	.02635	-.00348	-.00055	.00079	-.06768	-.00699	-.00034	.00090
45.000	-.05659	.00848	.01951	-.00157	-.00028	.00118	-.05705	-.00549	.00002	.00122
60.000	-.04889	.00901	.01350	.00015	-.00016	.00152	-.04962	-.00309	.00021	.00151
GRADIENT	.00161	-.00031	-.00295	.00039	.00105	.00001	.00164	.00009	.00102	-.00024

CA20 (747/1 01 SI) - (01 SI) D/S (073 - 010 (VGN073) (05 SEP 75)

REFERENCE DATA

SREF =	2690.0000 SQ.FT.	XMRP =	1109.0000 IN.XO		
LREF =	474.8100 IN.	YMRP =	.0000 IN.YO		
BREF =	936.6800 IN.	ZMRP =	375.0000 IN.ZO		
SCALE =	.0300				

PARAMETRIC DATA

ALPHAC =	4.000	BETAC =	5.000
ELV-IB =	.000	ELV-OB =	3.000
ELEVON =	5.000	MACH =	.600
PHI =	.000	DX =	10.000
DY =	10.000	BETAO =	.000

RN/L = 3.24 GRADIENT INTERVAL = .00/ 12.00

ALPHAO = 10.000

DZ	DCN	DCA	DCLM	DCY	DCBL	DCYN	DCL	DCD	DCSL	DCLN
.000	-.14740	.00625	.05549	.00217	-.01322	-.00536	-.14624	-.01944	-.01395	-.00299
3.000	-.13241	.00420	.04328	.00195	-.01025	-.00443	-.13113	-.01886	-.01065	-.00259
7.500	-.11687	.00369	.03553	.00082	-.00793	-.00311	-.11573	-.01666	-.00835	-.00169
15.000	-.09349	.00306	.02744	.00030	-.00527	-.00196	-.09260	-.01322	-.00553	-.00102
30.000	-.06111	.00193	.02034	.00062	-.00298	-.00023	-.06052	-.00871	-.00298	.00029
45.000	-.03985	.00190	.01524	.00142	-.00202	.00074	-.03939	-.00502	-.00186	.00108
60.000	-.01422	.00060	.00779	.00183	-.00118	.00169	-.01411	-.00187	-.00087	.00187
GRADIENT	.00402	-.00032	-.00259	-.00019	.00089	.00030	.00402	.00038	.00073	.00018

RN/L = 3.25 GRADIENT INTERVAL = .00/ 12.00

ALPHAO = 14.000

DZ	DCN	DCA	DCLM	DCY	DCBL	DCYN	DCL	DCD	DCSL	DCLN
.000	-.14928	.00358	.06985	-.00471	-.01032	-.00074	-.14571	-.03264	-.01019	.00177
3.000	-.14108	-.00019	.05939	-.00454	-.00686	-.00033	-.13695	-.03431	-.00673	.00134
7.500	-.12633	-.00204	.04637	-.00451	-.00363	.00029	-.12208	-.03255	-.00346	.00116
15.000	-.10497	-.00303	.03493	-.00499	-.00060	.00137	-.10112	-.02834	-.00025	.00148
30.000	-.07692	-.00212	.02231	-.00226	.00047	.00166	-.07383	-.02059	.00085	.00150
45.000	-.06528	.00046	.01859	.00068	-.00014	.00148	-.06345	-.01534	.00023	.00147
60.000	-.05307	-.00018	.01352	.00322	-.00020	.00170	-.05145	-.01301	.00022	.00170
GRADIENT	.00308	-.00072	-.00309	.00003	.00089	.00014	.00316	.00004	.00088	-.00008

CA20 (747/1 01 S1) - (01 S1) D/S (074 - 010) (VGN074) (11 MAR 75)

REFERENCE DATA

SREF =	2690.0000 SQ.FT.	XMRP =	1109.0000 IN.XO		
LREF =	474.8100 IN.	YMRP =	.0000 IN.YO		
BREF =	935.6800 IN.	ZMRP =	375.0000 IN.ZO		
SCALE =	.0300				

PARAMETRIC DATA

ALPHAC =	8.000	BETAC =	5.000
ELV-IB =	.000	ELV-OB =	3.000
ELEVON =	5.000	MACH =	.600
PHI =	.000	DX =	.000
DY =	10.000	BETAO =	.000

RN/L = 3.27 GRADIENT INTERVAL = .00/ 12.00

ALPHAO = 10.000

DZ	DCN	DCA	DCLM	DCY	DCBL	DCYN	DCL	DCD	DCSL	DCLN
.000	-.26892	.01156	.05316	.00694	-.01549	-.00831	-.26654	-.03978	-.01670	-.00550
3.000	-.25209	.01077	.04540	.00589	-.01259	-.00680	-.26588	-.03612	-.01357	-.00451
7.500	-.24099	.00942	.03918	.00367	-.01021	-.00550	-.23697	-.03257	-.01102	-.00365
15.000	-.20218	.00767	.03186	.00187	-.00737	-.00394	-.20044	-.02755	-.00794	-.00260
30.000	-.14922	.00584	.02486	.00064	-.00462	-.00154	-.14797	-.02016	-.00481	-.00071
45.000	-.11603	.00393	.01695	.00120	-.00318	-.00044	-.11493	-.01639	-.00321	.00012
60.000	-.08304	.00157	.01301	.00216	-.00165	.00047	-.08206	-.01287	-.00174	.00078
GRADIENT	.00639	-.00029	-.00183	-.00044	.00069	.00037	.00633	.00082	.00074	.00024

RN/L = 3.22 GRADIENT INTERVAL = .00/ 12.00

ALPHAO = 14.000

DZ	DCN	DCA	DCLM	DCY	DCBL	DCYN	DCL	DCD	DCSL	DCLN
.000	-.26951	.00950	.08047	.00406	-.01692	-.00510	-.26380	-.05598	-.01765	-.00065
3.000	-.24937	.00740	.06680	.00237	-.01224	-.00383	-.24375	-.05315	-.01280	-.00075
7.500	-.22365	.00584	.05579	-.00075	-.00837	-.00207	-.21661	-.04849	-.00862	.00002
15.000	-.18328	.00370	.04544	-.00330	-.00458	-.00031	-.18453	-.04220	-.00452	.00081
30.000	-.13577	.00187	.03284	-.00452	-.00057	.00170	-.13316	-.03128	-.00015	.00178
45.000	-.10571	.00201	.02577	-.00336	.00125	.00234	-.10306	-.02362	.00178	.00197
60.000	-.08220	.00041	.01809	-.00074	.00189	.00274	-.07586	-.01549	.00250	.00220
GRADIENT	.00606	-.00048	-.00323	-.00065	.00112	.00040	.00599	.00100	.00118	.00012

ORIGINAL PAGE IS
OF POOR QUALITY

CA20 (747/1 01 S1) - (01 S1) D/S (075 - 010) (VGN075) (11 MAR 75)

REFERENCE DATA

SREF = 2690.0000 SQ.FT. XMRP = 1109.0000 IN.XO
LREF = 474.8100 IN. YMRP = .0000 IN.YO
BREF = 936.6800 IN. ZMRP = 375.0000 IN.ZO
SCALE = .0300

PARAMETRIC DATA

ALPHAC = 8.000 BETAC = 5.000
ELV-IB = .000 ELV-OB = 3.000
ELEVON = 5.000 MACH = .600
PHI = .000 DX = 10.000
DY = 10.000 BETAO = .000

RN/L = 3.24 GRADIENT INTERVAL = .00/ 12.00

ALPHAO = 10.000

DZ	DCN	DCA	DCLM	DCY	DCBL	DCYN	DCL	DCD	DCSL	DCLN
.000	-.31634	.00972	.03322	.00681	-.01427	-.00756	-.31322	-.04536	-.01537	-.00497
3.000	-.29836	.00927	.03003	.00541	-.01218	-.00648	-.29543	-.04268	-.01312	-.00427
7.500	-.27015	.00795	.02597	.00378	-.00979	-.00533	-.26742	-.03908	-.01057	-.00355
15.000	-.22934	.00625	.02063	.00240	-.00697	-.00370	-.22684	-.03367	-.00750	-.00244
30.000	-.17675	.00468	.02048	.00194	-.00461	-.00174	-.17488	-.02608	-.00484	-.00091
45.000	-.13621	.00119	.01423	.00265	-.00335	-.00089	-.13435	-.02248	-.00345	-.00030
60.000	-.10095	-.00168	.00927	.00423	-.00247	.00012	-.09913	-.01919	-.00241	.00055
GRADIENT	.00617	-.00024	-.00096	-.00038	.00059	.00029	.00612	.00083	.00063	.00019

RN/L = 3.23 GRADIENT INTERVAL = .00/ 12.00

ALPHAO = 14.000

DZ	DCN	DCA	DCLM	DCY	DCBL	DCYN	DCL	DCD	DCSL	DCLN
.000	-.28676	.00527	.06358	.00720	-.01689	-.00603	-.27952	-.06426	-.01785	-.00176
3.000	-.26510	.00254	.05191	.00502	-.01323	-.00474	-.25784	-.06167	-.01399	-.00139
7.500	-.23741	.00082	.04328	.00208	-.01002	-.00292	-.23056	-.05664	-.01043	-.00041
15.000	-.20456	-.00122	.03748	-.00002	-.00560	-.00111	-.19819	-.05067	-.00590	.00033
30.000	-.14851	-.00381	.02761	-.00217	-.00188	.00161	-.14317	-.03963	-.00143	.00202
45.000	-.11510	-.00425	.02427	-.00206	.00139	.00290	-.11066	-.03197	.00205	.00247
60.000	-.08467	-.00775	.01615	-.00062	.00341	.00357	-.08029	-.02800	.00417	.00264
GRADIENT	.00655	-.00059	-.00264	-.00068	.00090	.00041	.00649	.00102	.00097	.00018

CA20 (747/1 01 S1) - (01 S1) D/S (076 - 010) (VGN076) (11 MAR 75)

REFERENCE DATA

SREF =	2690.0000 SQ.FT.	XMRP =	1109.0000 IN.XO
LREF =	474.8100 IN.	YMRP =	.0000 IN.YO
EREF =	936.6800 IN.	ZMRP =	375.0000 IN.ZO
SCALE =	.0300		

PARAMETRIC DATA

ALPHAC =	4.000	BETAC =	-5.000
ELV-IB =	.000	ELV-OB =	3.000
ELEVON =	5.000	MACH =	.600
PHI =	7.500	DX =	.000
DY =	.000	BETAO =	.000

RN/L = 3.22 GRADIENT INTERVAL = .00/ 12.00

ALPHAO = 10.000

DZ	DCN	DCA	DCLM	DCY	DCBL	DCYN	DCL	DCD	DCSL	DCLN
.000	-.15622	.00897	.05096	-.01661	.01007	.00372	-.15540	-.01830	.01055	.00191
3.000	-.14019	.00671	.03987	-.01253	.00817	.00309	-.13922	-.01774	.00859	.00163
7.500	-.12709	.00595	.03542	-.00800	.00549	.00225	-.12619	-.01621	.00678	.00109
15.000	-.10526	.00452	.02692	-.00450	.00486	.00205	-.10445	-.01383	.00514	.00118
30.000	-.07595	.00354	.01807	-.00109	.00266	.00152	-.07541	-.00970	.00288	.00103
45.000	-.06061	.00369	.01328	.00046	.00103	.00074	-.06036	-.00669	.00114	.00055
60.000	-.04656	.00446	.00989	.00133	-.00029	.00005	-.04860	-.00404	-.00028	.00010
GRADIENT	.00391	-.00038	-.00199	.00114	-.00047	-.00019	.00382	.00028	-.00050	-.00011

RN/L = 3.24 GRADIENT INTERVAL = .00/ 12.00

ALPHAO = 14.000

DZ	DCN	DCA	DCLM	DCY	DCBL	DCYN	DCL	DCD	DCSL	DCLN
.000	-.12115	.01261	.06181	-.02210	.00905	.00202	-.12050	-.01707	.00927	-.00023
3.000	-.11515	.01117	.05307	-.01823	.00759	.00135	-.11443	-.01702	.00769	-.00053
7.500	-.10752	.01014	.04469	-.01388	.00595	.00064	-.10678	-.01617	.00594	-.00079
15.000	-.09322	.01010	.03442	-.01025	.00404	.00011	-.09289	-.01275	.00394	-.00087
30.000	-.06894	.00995	.02062	-.00620	.00208	-.00057	-.06931	-.00701	.00185	-.00116
45.000	-.05463	.00852	.01613	-.00604	.00214	-.00047	-.05507	-.00495	.00196	-.00097
60.000	-.04634	.00847	.01200	-.00492	.00157	-.00025	-.04701	-.00299	.00146	-.00083
GRADIENT	.00181	-.00032	-.00225	.00109	-.00042	-.00018	.00183	.00013	-.00045	-.00007

CA20 (747/1 01 S1) - (01 S1) D/S (077 - 010) (VGN077) (11 MAR 75)

REFERENCE DATA

SREF =	2690.0000 SQ.FT.	XMRP =	1109.0000 IN.XO
LREF =	474.8100 IN.	YMRP =	.0000 IN.YO
BREF =	936.6800 IN.	ZMRP =	375.0000 IN.ZO
SCALE =	.0300		

PARAMETRIC DATA

ALPHAC =	4.000	BETAC =	-5.000
ELV-IB =	.000	ELV-OB =	3.000
ELEVON =	5.000	MACH =	.600
PHI =	7.500	DX =	10.000
DY =	.000	BETAO =	.000

RN/L = 3.29 GRADIENT INTERVAL = .00/ 12.00

ALPHAO = 10.000

DZ	DCN	DCA	DCLM	DCY	DCBL	DCYN	DCL	DCD	DCSL	DCLN
.000	-.19593	.01433	.04812	-.01468	.01306	.00341	-.19544	-.01991	.01345	.00109
3.000	-.17176	.01115	.03300	-.01250	.01012	.00357	-.17109	-.01884	.01058	.00178
7.500	-.15594	.00982	.02879	-.00727	.00840	.00251	-.15528	-.01741	.00871	.00101
15.000	-.12810	.00709	.01859	-.00465	.00620	.00224	-.12738	-.01526	.00649	.00113
30.000	-.09327	.00569	.01149	-.00050	.00336	.00169	-.09284	-.01060	.00360	.00108
45.000	-.07460	.00610	.01003	.00107	.00166	.00065	-.07453	-.00695	.00175	.00035
60.000	-.05439	.00411	.00384	.00231	.00071	.00003	-.05427	-.00539	.00071	-.00010
GRADIENT	.00519	-.00058	-.00245	.00100	-.00060	-.00013	.00521	.00033	-.00062	-.00002

RN/L = 3.29 GRADIENT INTERVAL = .00/ 12.00

ALPHAO = 14.000

DZ	DCN	DCA	DCLM	DCY	DCBL	DCYN	DCL	DCD	DCSL	DCLN
.000	-.17481	.01473	.07760	-.01701	.01249	.00041	-.17318	-.02800	.01221	-.00262
3.000	-.15318	.01037	.05711	-.01476	.00917	.00060	-.15114	-.02700	.00904	-.00163
7.500	-.13675	.00776	.04345	-.01030	.00570	-.00034	-.13456	-.02555	.00545	-.00170
15.000	-.11749	.00738	.03376	-.00646	.00285	-.00119	-.11579	-.02126	.00248	-.00184
30.000	-.08920	.00570	.02100	-.00295	.00099	-.00194	-.08808	-.01483	.00049	-.00212
45.000	-.06547	.00584	.01459	-.00153	-.00035	-.00268	-.06494	-.01017	-.00099	-.00252
60.000	-.05622	.00723	.01134	-.00084	-.00080	-.00225	-.05630	-.00659	-.00132	-.00199
GRADIENT	.00496	-.00090	-.00443	.00090	-.00089	-.00011	.00503	.00033	-.00089	.00011

CA20 (747/1 01 S1) - (01 S1) D/S (078 - 010) (VGN078) (11 MAR 75)

REFERENCE DATA

SREF =	2690.0000 SQ.FT.	XMRP =	1109.0000 IN.XO
LREF =	474.8100 IN.	YMRP =	.0000 IN.YO
BREF =	935.6800 IN.	ZMRP =	375.0000 IN.ZO
SCALE =	.0300		

PARAMETRIC DATA

ALPHAC =	8.000	BETAC =	-5.000
ELV-IB =	.000	ELV-OB =	3.000
ELEVON =	5.000	MACH =	.600
PHI =	7.500	DX =	.000
DY =	.000	BETAO =	.000

RN/L = 3.21 GRADIENT INTERVAL = .00/ 12.00

ALPHAO = 10.000

DZ	DCN	DCA	DCLM	DCY	DCBL	DCYN	DCL	DCD	DCSL	DCLN
.000	-.31400	.01555	.03596	-.02282	.01461	.00219	-.31193	-.03920	.01477	-.00038
3.000	-.28946	.01507	.03325	-.01724	.01206	.00251	-.28768	-.03543	.01231	.00037
7.500	-.25972	.01423	.03080	-.01115	.00995	.00242	-.25925	-.03109	.01022	.00065
15.000	-.21768	.01319	.02646	-.00595	.00732	.00228	-.21685	-.02464	.00761	.00098
30.000	-.15511	.01041	.01824	-.00131	.00404	.00181	-.15554	-.01695	.00429	.00108
45.000	-.11545	.00939	.01365	.00060	.00231	.00094	-.11926	-.01151	.00244	.00052
60.000	-.09475	.01087	.01165	.00268	.00057	.00034	-.09519	-.00575	.00062	.00023
GRADIENT	.00719	-.00018	-.00065	.00154	-.00051	.00003	.00711	.00107	-.00060	.00013

RN/L = 3.30 GRADIENT INTERVAL = .00/ 12.00

ALPHAO = 14.000

DZ	DCN	DCA	DCLM	DCY	DCBL	DCYN	DCL	DCD	DCSL	DCLN
.000	-.28208	.01032	.05173	-.03391	.01566	.00349	-.27619	-.05922	.01604	-.00041
3.000	-.25970	.00840	.05336	-.02785	.01324	.00312	-.25305	-.05444	.01361	-.00017
7.500	-.23122	.00719	.04660	-.02124	.01098	.00245	-.22609	-.04695	.01125	-.00028
15.000	-.19122	.00599	.03702	-.01536	.00824	.00202	-.18597	-.04054	.00848	-.00003
30.000	-.13757	.00589	.02669	-.00878	.00522	.00096	-.13491	-.02757	.00530	-.00033
45.000	-.10444	.00553	.01952	-.00597	.00306	-.00019	-.10269	-.01990	.00292	-.00098
60.000	-.08524	.00552	.01706	-.00421	.00249	-.00076	-.08407	-.01516	.00224	-.00134
GRADIENT	.00673	-.00041	-.00199	.00167	-.00062	-.00014	.00663	.00123	-.00063	.00001

CA20 (747/1 01 S1) - (01 S1) D/S (079 - 010) (VGN079) (11 MAR 75)

REFERENCE DATA

SREF =	2690.0000 SQ.FT.	XMRP =	1109.0000 IN.XO		
LREF =	474.8100 IN.	YMRP =	.0000 IN.YO		
BREF =	936.6800 IN.	ZMRP =	375.0000 IN.ZO		
SCALE =	.0300				

PARAMETRIC DATA

ALPHAC =	8.000	BETAC =	-5.000
ELV-IB =	.000	ELV-OB =	3.000
ELEVON =	5.000	MACH =	.600
PHI =	7.500	DX =	10.300
DY =	.000	BETAO =	.000

RN/L = 3.28 GRADIENT INTERVAL = .00/ 12.00

ALPHAO = 10.000

DZ	DCN	DCA	DCLM	DCY	DCBL	DCYN	DCL	DCD	DCSL	DCLN
.000	-.34618	.01899	.02084	-.02238	.01580	.00275	-.34422	-.04142	.01604	-.00004
3.000	-.31894	.01718	.01655	-.01731	.01343	.00312	-.31708	-.03947	.01377	.00074
7.500	-.29219	.01676	.01746	-.01133	.01158	.00301	-.29065	-.03424	.01192	.00095
15.000	-.25152	.01659	.01717	-.00622	.00903	.00289	-.25059	-.02733	.00939	.00128
30.000	-.18367	.01331	.01178	-.00112	.00532	.00203	-.18319	-.01878	.00560	.00108
45.000	-.14218	.01268	.01101	.00146	.00304	.00077	-.14223	-.01220	.00313	.00023
60.000	-.12363	.01720	.01570	.00467	.00102	.00031	-.12474	-.00453	.00105	.00012
GRADIENT	.00710	-.00028	-.00040	.00146	-.00055	.00003	.00704	.00096	-.00054	.00013

RN/L = 3.27 GRADIENT INTERVAL = .00/ 12.00

ALPHAO = 14.000

DZ	DCN	DCA	DCLM	DCY	DCBL	DCYN	DCL	DCD	DCSL	DCLN
.000	-.34675	.01960	.06314	-.03380	.01925	.00455	-.34117	-.06497	.01978	-.00023
3.000	-.30600	.01355	.04414	-.02770	.01509	.00417	-.30020	-.06087	.01565	.00040
7.500	-.27679	.01052	.03909	-.02126	.01255	.00318	-.27111	-.05675	.01295	.00005
15.000	-.23418	.00755	.03228	-.01442	.00935	.00234	-.22906	-.04932	.00954	.00001
30.000	-.16499	.00393	.02571	-.00705	.00525	.00123	-.16101	-.03619	.00539	-.00008
45.000	-.11906	.00030	.01755	-.00452	.00364	-.00027	-.11559	-.02651	.00347	-.00114
60.000	-.09807	.00104	.01879	-.00304	.00346	-.00158	-.09541	-.02271	.00297	-.00237
GRADIENT	.00911	-.00116	-.00304	.00165	-.00087	-.00019	.00911	.00108	-.00089	.00003

CA20 (747/1 01 S1) - (01 S1) D/S (080 - 010) (VGN080) (11 MAR 75)

REFERENCE DATA

SREF =	2890.0000 SQ.FT.	XMRP =	1109.0000 IN.XO		
LREF =	474.8100 IN.	YMRP =	.0000 IN.YO		
BREF =	936.6900 IN.	ZMRP =	375.0000 IN.ZO		
SCALE =	.0300				

PARAMETRIC DATA

ALPHAC =	4.000	BETAC =	-5.000
ELV-IB =	.000	ELV-OB =	3.000
ELEVON =	5.000	MACH =	.600
PHI =	7.500	DX =	.000
DY =	10.000	BETAO =	.000

RN/L = 3.33 GRADIENT INTERVAL = .00/ 12.00

ALPHAO = 10.000

DZ	DCN	DCA	DCLM	DCY	DCBL	DCYN	DCL	DCD	DCSL	DCLN
.000	-.16161	.00969	.04674	-.00472	.00223	.00043	-.16095	-.01852	.00227	.00004
3.000	-.14668	.00640	.03595	-.00384	.00160	.00026	-.14557	-.01917	.00162	-.00002
7.500	-.13421	.00532	.03201	-.00282	.00113	.00039	-.13309	-.01806	.00118	.00019
15.000	-.11904	.00362	.02593	-.00128	.00094	.00097	-.11293	-.01624	.00110	.00079
30.000	-.08503	.00271	.02028	.00164	.00044	.00160	-.08421	-.01210	.00071	.00150
45.000	-.06255	.00125	.01354	.00335	-.00002	.00162	-.06221	-.00970	.00026	.00160
60.000	-.03593	-.00146	.00408	.00433	-.00055	.00131	-.03513	-.00768	-.00032	.00139
GRADIENT	.00358	-.00055	-.00188	.00028	-.00014	-.00000	.00363	.00008	-.00014	.00002

RN/L = 3.32 GRADIENT INTERVAL = .00/ 12.00

ALPHAO = 14.000

DZ	DCN	DCA	DCLM	DCY	DCBL	DCYN	DCL	DCD	DCSL	DCLN
.000	-.08556	.00316	.03553	-.01267	.00507	.00412	-.08475	-.01787	.00592	.00278
3.000	-.08169	.00161	.02734	-.01061	.00455	.00320	-.07955	-.01825	.00520	.00200
7.500	-.07638	.00112	.02124	-.00771	.00354	.00239	-.07690	-.01802	.00411	.00143
15.000	-.07730	.00304	.02101	-.00440	.00242	.00213	-.07574	-.01576	.00266	.00148
30.000	-.06402	.00548	.01893	.00034	.00116	.00205	-.06345	-.01017	.00162	.00170
45.000	-.04903	.00536	.01254	.00246	.00067	.00201	-.04887	-.00665	.00114	.00179
60.000	-.03641	.00553	.00845	.00442	.00033	.00210	-.03650	-.00392	.00083	.00185
GRADIENT	.00093	-.00026	-.00185	.00066	-.00019	-.00023	.00102	-.00001	-.00024	-.00018

CA20 (747/1 01 S1) - (01 S1) D/S (081 - 010) (VGN081) (11 MAR 75)

REFERENCE DATA

SREF = 2690.0000 SQ.FT. XMRP = 1109.0000 IN.XO
LREF = 474.8100 IN. YMRP = .0000 IN.YO
BREF = 935.6800 IN. ZMRP = 375.0000 IN.ZO
SCALE = .0300

PARAMETRIC DATA

ALPHAC =	4.000	BETAC =	-5.000
ELV-IB =	.000	ELV-OB =	3.000
ELEVON =	5.000	MACH =	.600
PHI =	7.500	DX =	10.000
DY =	10.000	BETAO =	.000

RN/L = 3.26 GRADIENT INTERVAL = .00/ 12.00

ALPHAO = 10.000

DZ	DCN	DCA	DCLM	DCY	DCBL	DCYN	DCL	DCD	DCSL	DCLN
.000	-.16784	.00813	.02901	-.00948	.00434	.00000	-.16671	-.02114	.00428	-.00075
3.000	-.15496	.00645	.02337	-.00858	.00333	.00004	-.15372	-.02055	.00329	-.00054
7.500	-.14358	.00566	.02345	-.00631	.00256	-.00004	-.14238	-.01936	.00251	-.00048
15.000	-.12399	.00455	.02066	-.00473	.00170	.00035	-.12290	-.01704	.00173	.00005
30.000	-.08828	.00179	.01484	-.00155	.00083	.00093	-.08725	-.01357	.00093	.00077
45.000	-.06903	.00160	.01290	.00039	.00011	.00092	-.06826	-.01042	.00027	.00083
60.000	-.05659	.00269	.01337	.00239	-.00082	.00086	-.05619	-.00718	-.00046	.00095
GRADIENT	.00318	-.00032	-.00069	.00043	-.00023	-.00001	.00319	.00024	-.00023	.00003

RN/L = 3.25 GRADIENT INTERVAL = .00/ 12.00

ALPHAO = 14.000

DZ	DCN	DCA	DCLM	DCY	DCBL	DCYN	DCL	DCD	DCSL	DCLN
.000	-.12471	-.00009	.03515	-.02214	.00669	.00179	-.12099	-.03025	.00692	.00012
3.000	-.11256	-.00328	.02476	-.01997	.00598	.00080	-.10942	-.03041	.00599	-.00067
7.500	-.10263	-.00429	.01886	-.01747	.00532	.00044	-.09954	-.02699	.00527	-.00066
15.000	-.08954	-.00323	.01505	-.01402	.00374	.00012	-.08610	-.02479	.0[illegible]395	-.00079
30.000	-.07734	.00286	.01684	-.00795	.00119	-.00039	-.07573	-.01594	.00106	-.00057
45.000	-.06059	.00370	.01405	-.00549	.00050	-.00049	-.05969	-.01106	.00037	-.00060
60.000	-.04940	.00505	.01113	-.00365	.00028	-.00011	-.04915	-.00705	.00022	-.00017
GRADIENT	.00289	-.00054	-.00223	.00062	-.00018	-.00017	.00293	.00018	-.00021	-.00012

DATE 04 DEC 75 TABULATED SOURCE DATA - CA20

CA20 (747/1 01 S1) - (01 S1) D/S (082 - 010) (VGN082) (11 MAR 75)

REFERENCE DATA

SREF =	2690.0000 SQ.FT.	XMRP =	1109.0000 IN.XO
LREF =	474.8100 IN.	YMRP =	.0000 IN.YO
BREF =	936.6800 IN.	ZMRP =	375.0000 IN.ZO
SCALE =	.0300		

PARAMETRIC DATA

ALPHAC =	4.000	BETAC =	-5.000
ELV-IB =	.000	ELV-OB =	3.000
ELEVON =	5.000	MACH =	.600
PHI =	7.500	DX =	.000
DY =	10.000	BETAO =	.000

RN/L = 3.33 GRADIENT INTERVAL = .00/ 12.00

ALPHAO = 10.000

DZ	DCN	DCA	DCLM	DCY	DCBL	DCYN	DCL	DCD	DCSL	DCLN
.000	-.16161	.00969	.04674	-.00472	.00223	.00043	-.16083	-.01852	.00227	.00009
3.000	-.14658	.00840	.03585	-.00384	.00160	.00026	-.14557	-.01917	.00162	-.00002
7.500	-.13421	.00532	.03201	-.00262	.00113	.00039	-.13309	-.01805	.00118	.00019
15.000	-.11404	.00362	.02593	-.00128	.00094	.00097	-.11293	-.01624	.00110	.00079
30.000	-.08593	.00271	.02028	.00164	.00044	.00160	-.08421	-.01210	.00071	.00150
45.000	-.06295	.00125	.01354	.00335	-.00002	.00162	-.06221	-.00970	.00026	.00160
60.000	-.03593	-.00146	.00408	.00433	-.00055	.00131	-.03513	-.00768	-.00032	.00138
GRADIENT	.00359	-.00055	-.00188	.00028	-.00014	-.00000	.00363	.00008	-.00014	.00002

RN/L = 3.32 GRADIENT INTERVAL = .00/ 12.00

ALPHAO = 14.000

DZ	DCN	DCA	DCLM	DCY	DCBL	DCYN	DCL	DCD	DCSL	DCLN
.000	-.08353	.00316	.03553	-.01267	.00507	.00412	-.08475	-.01787	.00592	.00278
3.000	-.08169	.00161	.02734	-.01061	.00456	.00320	-.07985	-.01825	.00520	.00200
7.500	-.07693	.00112	.02124	-.00771	.00354	.00239	-.07690	-.01602	.00411	.00143
15.000	-.07730	.00304	.02101	-.00440	.00242	.00213	-.07574	-.01576	.00286	.00148
30.000	-.06402	.00548	.01693	.00034	.00116	.00205	-.06345	-.01017	.00162	.00170
45.000	-.04903	.00539	.01294	.00246	.00057	.00201	-.04837	-.00695	.00114	.00179
60.000	-.03641	.00553	.00845	.00442	.00033	.00210	-.03550	-.00392	.00083	.00195
GRADIENT	.00059	-.00026	-.00186	.00065	-.00019	-.00023	.00102	-.00001	-.00024	-.00018

ORIGINAL PAGE IS
OF POOR QUALITY

CA20 (747/1 01 S1) - (01 S1) D/S (083 - 010) (VGN083) (11 MAR 75)

REFERENCE DATA

SREF =	2690.0000 SQ.FT.	XMRP =	1109.0000 IN.XO
LREF =	474.8100 IN.	YMRP =	.0000 IN.YO
BREF =	936.6800 IN.	ZMRP =	375.0000 IN.ZO
SCALE =	.0300		

PARAMETRIC DATA

ALPHAC =	8.000	BETAC =	-5.000
ELV-IB =	.000	ELV-OB =	3.000
ELEVON =	5.000	MACH =	.600
PHI =	7.500	DX =	10.000
DY =	10.000	BETAO =	.000

RN/L = 3.25 GRADIENT INTERVAL = .00/ 12.00

ALPHAO = 10.000

DZ	DCN	DCA	DCLM	DCY	DCBL	DCYN	DCL	DCD	DCSL	DCLN
.000	-.31501	.01408	.01015	-.00838	.00558	-.00068	-.31267	-.04083	.00538	-.00164
3.000	-.29914	.01430	.01353	-.00773	.00477	-.00080	-.29708	-.03788	.00456	-.00161
7.500	-.27313	.01341	.01535	-.00672	.00406	-.00065	-.27131	-.03422	.00388	-.00134
15.000	-.22722	.01028	.01300	-.00545	.00308	-.00010	-.22555	-.02933	.00302	-.00063
30.000	-.16737	.00822	.01429	-.00189	.00139	.00059	-.16625	-.02097	.00147	.00034
45.000	-.12743	.00647	.01262	.00025	.00031	.00074	-.12651	-.01576	.00044	.00067
60.000	-.10354	.00548	.00957	.00336	-.00081	.00187	-.10282	-.01258	-.00047	.00183
GRADIENT	.00560	-.00010	.00067	.00022	-.00020	.00001	.00553	.00068	-.00019	.00004

RN/L = 3.24 GRADIENT INTERVAL = .00/ 12.00

ALPHAO = 14.000

DZ	DCN	DCA	DCLM	DCY	DCBL	DCYN	DCL	DCD	DCSL	DCLN
.000	-.27533	.00221	.02142	-.01911	.00604	-.00049	-.28769	-.06446	.00574	-.00194
3.000	-.25436	-.00042	.01625	-.01650	.00508	-.00046	-.24671	-.06194	.00481	-.00167
7.500	-.22392	-.00259	.01514	-.01719	.00437	-.00044	-.22246	-.05914	.00413	-.00148
15.000	-.19145	-.00495	.01384	-.01543	.00278	.00023	-.18457	-.05112	.00276	-.00045
30.000	-.14430	-.00283	.01911	-.01080	.00237	.00097	-.13933	-.03765	.00263	.00037
45.000	-.10695	-.00255	.01650	-.00944	.00283	.00133	-.10315	-.02835	.00307	.00061
60.000	-.08992	.00237	.01866	-.00598	.00269	.00110	-.08782	-.01945	.00287	.00042
GRADIENT	.00601	-.00063	-.00079	.00026	-.00022	.00001	.00593	.00064	-.00021	.00006

CA20 (747/1 01 S1) - (01 S1) D/S (084 - 010) (VGN084) (11 MAR 75)

REFERENCE DATA

SREF =	2690.0000 SQ.FT.	XMRP =	1109.0000 IN.XO		
LREF =	974.8100 IN.	YMRP =	.0000 IN.YO		
BREF =	935.6900 IN.	ZMRP =	375.0000 IN.ZO		
SCALE =	.0300				

PARAMETRIC DATA

ALPHAC =	4.000	BETAC =	.000
ELV-IB =	.000	ELV-OB =	3.000
ELEVON =	5.000	MACH =	.600
PHI =	7.500	DX =	.000
DY =	.000	BETAO =	.000

RN/L = 3.18 GRADIENT INTERVAL = .00/ 12.00

ALPHAO = 10.000

DZ	DCN	DCA	DCLM	DCY	DCBL	DCYN	DCL	DCD	DCSL	DCLN
.000	-.14540	.00834	.05121	-.00210	.00282	-.00006	-.14464	-.01704	.00277	-.00055
3.000	-.13309	.00831	.04028	-.00232	.00273	.00025	-.13216	-.01690	.00274	-.00023
7.500	-.12055	.00554	.03382	-.00176	.00239	.00019	-.11959	-.01548	.00239	-.00023
15.000	-.10052	.00462	.02578	-.00149	.00205	.00050	-.09979	-.01291	.00211	.00013
30.000	-.07534	.00427	.01933	-.00057	.00129	.00070	-.07494	-.00888	.00139	.00046
45.000	-.05582	.00337	.01224	-.00001	.00051	.00047	-.05536	-.00654	.00059	.00039
60.000	-.04074	.00226	.00442	.00036	-.00039	.00012	-.04051	-.00465	-.00035	.00018
GRADIENT	.00327	-.00036	-.00225	.00006	-.00006	.00003	.00328	.00022	-.00005	.00004

RN/L = 3.19 GRADIENT INTERVAL = .00/ 12.00

ALPHAO = 14.000

DZ	DCN	DCA	DCLM	DCY	DCBL	DCYN	DCL	DCD	DCSL	DCLN
.000	-.14378	.01118	.05406	-.00822	.00332	-.00103	-.14222	-.02394	.00397	-.00180
3.000	-.13237	.00937	.04384	-.00836	.00305	-.00102	-.13082	-.02244	.00271	-.00173
7.500	-.13260	.00937	.04159	-.00823	.00309	-.00078	-.13108	-.02241	.00281	-.00159
15.000	-.12142	.00975	.03223	-.00799	.00278	-.00059	-.12017	-.01991	.00255	-.00124
30.000	-.09350	.00972	.02026	-.00617	.00178	-.00063	-.09308	-.01319	.00159	-.00104
45.000	-.08387	.01101	.01427	-.00579	.00133	-.00065	-.08404	-.00981	.00113	-.00096
60.000	-.04564	.00880	.01093	-.00456	.00075	-.00064	-.04643	-.00241	.00057	-.00080
GRADIENT	.00137	-.00015	-.00157	.00000	-.00003	.00003	.00135	.00019	-.00002	.00004

CA20 (747/1 01 S1) - (01 S1) D/S (085 - 010) (VGN085) (11 MAR 75)

REFERENCE DATA

SREF =	2690.0000 SQ.FT.	XMRP =	1109.0000 IN.XO		
LREF =	474.8100 IN.	YMRP =	.0000 IN.YO		
BREF =	935.6800 IN.	ZMRP =	375.0000 IN.ZO		
SCALE =	.0300				

PARAMETRIC DATA

ALPHAC =	4.000	BETAC =	.000
ELV-18 =	.000	ELV-09 =	3.000
ELEVON =	5.000	MACH =	.600
PHI =	7.500	DX =	10.000
DY =	.000	BETAO =	.000

RN/L = 3.25 GRADIENT INTERVAL = .00/ 12.00

ALPHAO = 10.000

DZ	DCN	DCA	DCLM	DCY	DCBL	DCYN	DCL	DCD	DCSL	DCLN
.000	-.18283	.01178	.04599	-.00179	.00348	.00039	-.18209	-.02015	.00349	-.00022
3.000	-.16678	.00917	.03369	-.00196	.00327	.00049	-.16595	-.01993	.00330	-.00009
7.500	-.15077	.00777	.02655	-.00145	.00286	.00050	-.14993	-.01853	.00290	-.00001
15.000	-.12815	.00646	.01950	-.00176	.00258	.00072	-.12733	-.01559	.00267	.00027
30.000	-.09493	.00564	.01339	-.00050	.00183	.00102	-.09446	-.01093	.00199	.00069
45.000	-.07565	.00506	.01017	.00035	.00077	.00065	-.07538	-.00815	.00097	.00060
60.000	-.05859	.00479	.00817	.00171	-.00044	.00033	-.05863	-.00548	-.00029	.00040
GRADIENT	.00422	-.00052	-.00251	.00005	-.00008	.00001	.00424	.00022	-.00008	.00003

RN/L = 3.26 GRADIENT INTERVAL = .00/ 12.00

ALPHAO = 14.000

DZ	DCN	DCA	DCLM	DCY	DCBL	DCYN	DCL	DCD	DCSL	DCLN
.000	-.15589	.00720	.06949	-.00823	.00365	-.00085	-.15300	-.03073	.00354	-.00171
3.000	-.13943	.00316	.05146	-.00858	.00354	-.00054	-.13605	-.03067	.00330	-.00133
7.500	-.12177	.00092	.03718	-.00843	.00332	-.00081	-.11838	-.02657	.00303	-.00140
15.000	-.10157	.00183	.02671	-.00666	.00185	-.00131	-.09900	-.02220	.00147	-.00172
30.000	-.07013	.00312	.01560	-.00366	.00011	-.00206	-.06880	-.01384	-.00040	-.00203
45.000	-.05240	.00631	.01495	-.00485	.00039	-.00166	-.05237	-.00665	-.00002	-.00171
60.000	-.05465	.00728	.01148	-.00311	-.00026	-.00122	-.05478	-.00616	-.00055	-.00112
GRADIENT	.00450	-.00091	-.00422	-.00002	-.00004	.00003	.00456	.00030	-.00004	.00004

CA20 (747/1 01 S1) - (01 S1) D/S (086 - (10) (VGNOBS) (11 MAR 75)

REFERENCE DATA

SREF = 7000.0000 SQ.FT. XMCP = 1050.0000 IN.XO
LREF = 974.0100 IN. YMCP = .0000 IN.YO
TREF = 983.6800 IN. ZMCP = 375.0000 IN.ZO
SCALE = .0300

PARAMETRIC DATA

ALPHAC =	6.000	BETAC =	.000
ELV-IB =	.000	ELV-OB =	3.000
ELEVON =	5.000	MACH =	.600
PHI =	7.500	DX =	.000
DY =	.000	BETAO =	.000

RN/L = 3.22 GRADIENT INTERVAL = .00/ 12.00

ALPHAO = 10.000

DZ	DCN	DCA	DCLM	DCY	DCBL	DCYN	DCL	DCD	DCSL	DCLN
.000	-.30080	.01681	.04085	-.00255	.00598	.00133	-.30647	-.03727	.00602	.00029
3.000	-.25979	.01509	.03455	-.00233	.00548	.00124	-.28209	-.03442	.00561	.00027
7.500	-.25592	.01339	.03059	-.00224	.00495	.00098	-.25543	-.03093	.00504	.00018
15.000	-.21659	.01259	.02659	-.00206	.00359	.00101	-.21525	-.02539	.00410	.00030
30.000	-.15539	.01014	.01697	-.00037	.00245	.00090	-.15478	-.01699	.00257	.00046
45.000	-.11957	.00926	.01457	.00057	.00127	.00037	-.11935	-.01168	.00135	.00034
60.000	-.09031	.00882	.01214	.00159	.00000	.00060	-.09047	-.00699	.00011	.00059
GRADIENT	.00678	-.00054	-.00128	.00002	-.00012	-.00005	.00673	.00064	-.00013	-.00003

RN/L = 3.21 GRADIENT INTERVAL = .00/ 12.00

ALPHAO = 14.000

DZ	DCN	DCA	DCLM	DCY	DCBL	DCYN	DCL	DCD	DCSL	DCLN
.000	-.25981	.00730	.04963	-.01152	.00672	.00091	-.25289	-.05552	.00674	-.00074
3.000	-.24231	.00579	.04225	-.01165	.00633	.00101	-.23651	-.05300	.00638	-.00055
7.500	-.22136	.00563	.04400	-.01139	.00577	.00102	-.21615	-.04809	.00584	-.00040
15.000	-.16429	.00444	.03555	-.01103	.00528	.00128	-.17989	-.04028	.00543	-.00004
30.000	-.14704	.00513	.02504	-.00654	.00425	.00092	-.14392	-.03060	.00435	-.00014
45.000	-.11159	.00533	.02120	-.00700	.00301	.00003	-.10957	-.02180	.00293	-.00070
60.000	-.08037	.00536	.01806	-.00552	.00239	-.00017	-.07927	-.01424	.00228	-.00074
GRADIENT	.00497	-.00021	-.00142	.00002	-.00013	.00001	.00487	.00100	-.00012	.00004

CA20 (747/1 01 SI) - (01 SI) D/S (087 - 010) (VGN087) (11 MAR 75)

REFERENCE DATA

SREF = 2690.0000 SQ.FT. XMRP = 1109.0000 IN.XO
LREF = 474.8100 IN. YMRP = .0000 IN.YO
BREF = 936.6800 IN. ZMRP = 375.0000 IN.ZO
SCALE = .0300

PARAMETRIC DATA

ALPHAC =	8.000	BETAC =	.000
ELV-IB =	.000	ELV-OB =	3.000
ELEVON =	5.000	MACH =	.600
PHI =	7.500	DX =	10.000
DY =	.000	BETAO =	.000

RN/L = 3.28 GRADIENT INTERVAL = .00/ 12.00

ALPHAO = 10.000

DZ	DCN	DCA	DCLM	DCY	DCBL	DCYN	DCL	DCD	DCSL	DCLN
.000	-.33627	.01852	.02472	-.00202	.00607	.00216	-.33438	-.04015	.00635	.00107
3.000	-.31406	.01715	.02100	-.00250	.00590	.00199	-.31227	-.03765	.00606	.00095
7.500	-.28776	.01652	.02041	-.00237	.00530	.00187	-.28625	-.03370	.00554	.00092
15.000	-.24813	.01544	.01845	-.00160	.00455	.00149	-.24704	-.02788	.00475	.00068
30.000	-.18441	.01224	.01223	-.00045	.00329	.00139	-.18373	-.01997	.00348	.00080
45.000	-.14505	.01130	.01215	.00123	.00170	.00083	-.14481	-.01406	.00178	.00033
60.000	-.12224	.01254	.01623	.00380	-.00027	.00108	-.12255	-.00885	-.00008	.00111
GRADIENT	.00642	-.00026	-.00054	-.00004	-.00010	-.00004	.00637	.00086	-.00011	-.00002

RN/L = 3.27 GRADIENT INTERVAL = .00/ 12.00

ALPHAO = 14.000

DZ	DCN	DCA	DCLM	DCY	DCBL	DCYN	DCL	DCD	DCSL	DCLN
.000	-.32388	.01507	.05623	-.01090	.00762	.00149	-.31791	-.06373	.00775	-.00040
3.000	-.29243	.00930	.03732	-.01092	.00695	.00141	-.28599	-.05172	.00699	-.00029
7.500	-.26847	.00805	.03505	-.01098	.00612	.00127	-.26244	-.05714	.00625	-.00024
15.000	-.22569	.00371	.02667	-.00990	.00492	.00104	-.21989	-.05100	.00503	-.00018
30.000	-.13969	.00024	.02068	-.00718	.00310	.00028	-.13560	-.03356	.00309	-.00048
45.000	-.08735	-.00144	.01991	-.00577	.00184	-.00069	-.08441	-.02253	.00162	-.00112
60.000	-.05461	-.00037	.02089	-.00446	.00206	-.00064	-.05290	-.01357	.00164	-.00111
GRADIENT	.00723	-.00068	-.00264	-.00001	-.00020	-.00003	.00723	.00089	-.00020	.00002

CA20 (747/1 01 S1) - (01 S1) D/S (088 - 010) (VGK088) (11 MAR 75)

REFERENCE DATA

SREF =	2690.0000 SQ.FT.	XMRP =	1109.0000 IN.XO		
LREF =	474.8100 IN.	YMRP =	.0000 IN.YO		
BREF =	956.6800 IN.	ZMRP =	375.0000 IN.ZO		
SCALE =	.0300				

PARAMETRIC DATA

ALPHAC =	4.000	BETAC =	.000
ELV-IB =	.000	ELV-OB =	3.000
ELEVON =	5.000	MACH =	.600
PHI =	7.500	DX =	.000
DY =	10.000	ETAO =	.000

RN/L = 3.34 GRADIENT INTERVAL = .00/ 12.00

ALPHAO = 10.000

DZ	DCN	DCA	DCLM	DCY	DCBL	DCYN	DCL	DCD	DCSL	DCLN
.000	-.16183	.00798	.05202	.00511	-.00360	-.00238	-.16076	-.02024	-.00395	-.00172
3.000	-.14870	.00525	.04269	.00356	-.00286	-.00190	-.14753	-.01957	-.00315	-.00137
7.500	-.13591	.00538	.03624	.00297	-.00227	-.00150	-.13468	-.01828	-.00249	-.00108
15.000	-.11310	.00264	.02684	.00191	-.00140	-.00056	-.11184	-.01704	-.00147	-.00031
30.000	-.08509	.00222	.02042	.00258	-.00075	.00085	-.08418	-.01259	-.00060	.00095
45.000	-.06534	.00141	.01455	.00325	-.00053	.00124	-.06459	-.00995	-.00031	.00131
60.000	-.04435	-.00045	.00779	.00356	-.00009	.00105	-.04361	-.00814	.00009	.00105
GRADIENT	.00342	-.00033	-.00205	-.00027	.00017	.00012	.00343	.00027	.00019	.00008

RN/L = 3.32 GRADIENT INTERVAL = .00/ 12.00

ALPHA = 14.000

DZ	DCN	DCA	DCLM	DCY	DCBL	DCYN	DCL	DCD	DCSL	DCLN
.000	-.07704	-.00437	.03186	-.00396	.00008	.00168	-.07369	-.02287	.00048	.00162
3.000	-.08372	-.00174	.03318	-.00341	.00076	.00137	-.08081	-.02195	.00107	.00115
7.500	-.08538	-.00011	.03110	-.00321	.00154	.00129	-.08282	-.02076	.00181	.00088
15.000	-.07484	.00044	.02351	-.00241	.00148	.00147	-.07272	-.01769	.00179	.00107
30.000	-.06044	.00369	.01794	.00091	.00048	.00147	-.05954	-.01104	.00082	.00131
45.000	-.04848	.00471	.01340	.00237	.00024	.00160	-.04818	-.00716	.00062	.00149
60.000	-.04002	.00534	.00929	.00423	.00003	.00170	-.04012	-.00450	.00044	.00164
GRADIENT	-.00105	.00056	-.00013	.00008	.00019	-.00005	-.00116	.00028	.00018	-.00009

DATE 04 DEC 75 TABULATED SOURCE DATA - CA20

CA20 (747/1 01 S1) - (01 S1) D/S (089 - 010) (VGN089) (14 MAR 75)

REFERENCE DATA

SREF =	2690.0000 SQ.FT.	XMRP =	1109.0000 IN.XO
LREF =	474.8100 IN.	YMRP =	.0000 IN.YO
BREF =	935.6800 IN.	ZMRP =	375.0000 IN.ZO
SCALE =	.0300		

PARAMETRIC DATA

ALPHAC =	4.000	BETAC =	.000
ELV-IB =	.000	ELV-OB =	3.000
ELEVON =	5.000	MACH =	.600
PHI =	7.500	DX =	10.000
DY =	10.000	BETAO =	.000

RN/L = 3.32 GRADIENT INTERVAL = .00/ 12.00

ALPHAO = 10.000

DZ	DCN	DCA	DCLM	DCY	DCBL	DCYN	DCL	DCD	DCSL	DCLN
.000	-.16807	.00717	.03478	-.00048	-.00231	-.00247	-.16676	-.02213	-.00270	-.00203
3.000	-.15671	.00546	.02804	-.00104	-.00184	-.00239	-.15528	-.02184	-.00223	-.00204
7.500	-.14311	.00454	.02559	-.00167	-.00154	-.00210	-.14172	-.02038	-.00189	-.00180
15.000	-.12224	.00382	.02149	-.00221	-.00103	-.00114	-.12105	-.01746	-.00122	-.00094
30.000	-.09063	.00193	.01715	-.00144	-.00061	.00007	-.08950	-.01378	-.00059	.00017
45.000	-.07089	.00192	.01380	.00001	-.00060	.00073	-.07015	-.01041	-.00047	.00082
60.000	-.05559	.00400	.01370	.00197	-.00085	.00173	-.05553	-.00573	-.00055	.00166
GRADIENT	.00330	-.00034	-.00119	-.00016	.00010	.00005	.00331	.00024	.00011	.00003

RN/L = 3.26 GRADIENT INTERVAL = .00/ 12.00

ALPHAO = 14.000

DZ	DCN	DCA	DCLM	DCY	DCBL	DCYN	DCL	DCD	DCSL	DCLN
.000	-.11708	-.00703	.03426	-.01406	-.00029	-.00035	-.11188	-.03514	-.00037	-.00028
3.000	-.11128	-.00850	.02742	-.01354	.00101	-.00079	-.10592	-.03517	.00079	-.00101
7.500	-.10469	-.00776	.02544	-.01358	.00144	-.00065	-.09971	-.03266	.00124	-.00098
15.000	-.08211	-.00895	.01528	-.01249	.00185	-.00061	-.07750	-.02855	.00165	-.00104
30.000	-.07249	.00022	.01855	-.00822	.00027	-.00093	-.07039	-.01732	.00004	-.00097
45.000	-.05938	.00126	.01616	-.00547	-.00040	-.00115	-.05595	-.01290	-.00066	-.00102
60.000	-.05210	.00347	.01349	-.00313	-.00039	-.00067	-.05139	-.00924	-.00054	-.00055
GRADIENT	.00163	-.00008	-.00112	.00006	.00022	-.00003	.00160	.00032	.00021	-.00009

CA20 (747/1 01 S11 - (01 S1) D/S (090 - 010) (VGN090) (11 MAR 75)

REFERENCE DATA

SREF =	2690.0000 SQ.FT.	XMRP =	1109.0000 IN.XO
LREF =	474.8100 IN.	YMRP =	.0000 IN.YO
BREF =	936.6800 IN.	ZMRP =	375.0000 IN.ZO
SCALE =	.0300		

PARAMETRIC DATA

ALPHAC =	8.000	BETAC =	.000
ELV-IB =	.000	ELV-OB =	3.000
ELEVON =	5.000	MACH =	.600
PHI =	7.500	DX =	.000
DY =	10.000	BETAO =	.000

RN/L = 3.27 GRADIENT INTERVAL = .00/ 12.00

ALPHAO = 10.000

DZ	DCN	DCA	DCLM	DCY	DCBL	DCYN	DCL	DCD	DCSL	DCLN
.000	-.31655	.01461	.03804	.01134	-.00326	-.00247	-.31438	-.04059	-.00359	-.00185
3.000	-.28052	.01311	.03455	.00807	-.00248	-.00243	-.28839	-.03754	-.00265	-.00197
7.500	-.25751	.01100	.02879	.00527	-.00189	-.00193	-.25551	-.03388	-.00220	-.00157
15.000	-.21765	.01021	.02800	.00304	-.00126	-.00112	-.21632	-.02778	-.00144	-.00083
30.000	-.15622	.00749	.02203	.00254	-.00081	.00045	-.15514	-.01975	-.00072	.00058
45.000	-.11569	.00542	.01587	.00322	-.00091	.00104	-.11487	-.01475	-.00072	.00118
60.000	-.07782	.00390	.01050	.00414	-.00111	.00152	-.07732	-.00957	-.00093	.00169
GRADIENT	.00764	-.00048	-.00124	-.00079	.00018	.00008	.00781	.00089	.00019	.00004

RN/L = 3.28 GRADIENT INTERVAL = .00/ 12.00

ALPHAO = 14.000

DZ	DCN	DCA	DCLM	DCY	DCBL	DCYN	DCL	DCD	DCSL	DCLN
.000	-.23762	-.00076	.03822	.00559	-.00293	-.00033	-.23037	-.05823	-.00292	.00039
3.000	-.21650	-.00191	.03157	.00249	-.00142	.00016	-.21155	-.05472	-.00134	.00049
7.500	-.19728	-.00183	.02759	-.00072	-.00002	.00089	-.19098	-.04950	.00020	.00087
15.000	-.16743	-.00166	.02526	-.00271	.00075	.00179	-.16206	-.04211	.00116	.00155
30.000	-.12095	-.00046	.02049	-.00148	.00137	.00263	-.11724	-.02971	.00195	.00222
45.000	-.09301	.00218	.01838	-.00048	.00189	.00328	-.09078	-.02038	.00262	.00272
60.000	-.06926	.00226	.01236	.00188	.00169	.00334	-.06775	-.01456	.00244	.00283
GRADIENT	.00533	-.00013	-.00137	-.00083	.00039	.00016	.00520	.00116	.00041	.00007

ORIGINAL PAGE IS
OF POOR QUALITY

CA20 (747/1 01 S1) - (01 S1) D/S (091 - 010) (VGN091) (11 MAR 75)

REFERENCE DATA

SREF =	2690.0000 SQ.FT.	XMRP =	1109.0000 IN.XO		
LREF =	474.8100 IN.	YMRP =	.0000 IN.YO		
BREF =	936.6800 IN.	ZMRP =	375.0000 IN.ZO		
SCALE =	.0300				

PARAMETRIC DATA

ALPHAC =	8.000	BETAC =	.000
ELV-IB =	.000	ELV-OB =	3.000
ELEVON =	5.000	MACH =	.600
PHI =	7.500	DX =	10.000
DY =	10.000	BETAO =	.000

RN/L = 3.28 GRADIENT INTERVAL = .00/ 12.00

ALPHAO = 10.000

DZ	DCN	DCA	DCLM	DCY	DCBL	DCYN	DCL	DCD	DCSL	DCLN
.000	-.31915	.01417	.01990	.00512	-.00210	-.00248	-.31676	-.04146	-.00250	-.00207
3.000	-.29682	.01303	.01829	.00269	-.00139	-.00251	-.29458	-.03871	-.00180	-.00223
7.500	-.26634	.01096	.01560	.00025	-.00086	-.00231	-.26419	-.03545	-.00125	-.00212
15.000	-.22728	.00981	.01553	-.00139	-.00054	-.00134	-.22553	-.02980	-.00077	-.00122
30.000	-.16754	.00747	.01628	-.00041	-.00039	-.00018	-.16629	-.02174	-.00041	-.00012
45.000	-.13006	.00673	.01578	.00040	-.00075	.00032	-.12925	-.01596	-.00069	.00044
60.000	-.13878	.02207	.04461	.00466	-.00024	.00188	-.14051	-.00236	.00009	.00189
GRADIENT	.00702	-.00043	-.00058	-.00064	.00016	.00002	.00699	.00080	.00016	-.00000

RN/L = 3.26 GRADIENT INTERVAL = .00/ 12.00

ALPHAO = 14.000

DZ	DCN	DCA	DCLM	DCY	DCBL	DCYN	DCL	DCD	DCSL	DCLN
.000	-.26284	-.00447	.01752	-.00526	-.00259	-.00284	-.26395	-.05793	-.00320	-.00213
3.000	-.24351	-.00629	.01367	-.00742	-.00159	-.00272	-.23476	-.05501	-.00219	-.00226
7.500	-.21626	-.00767	.01077	-.00956	-.00080	-.00214	-.20799	-.05976	-.00129	-.00188
15.000	-.18534	-.00750	.01219	-.01143	-.00077	-.00098	-.17802	-.05212	-.00098	-.00077
30.000	-.13055	-.00762	.01048	-.01051	.00095	.00053	-.12483	-.03889	.00105	.00028
45.000	-.10722	-.00130	.01811	-.01028	.00257	.00180	-.10372	-.02720	.00293	.00113
60.000	-.08451	.00009	.01656	-.00730	.00316	.00218	-.08202	-.02036	.00360	.00135
GRADIENT	.00620	-.00042	-.00088	-.00057	.00023	.00010	.00612	.00109	.00025	.00004

CA20 (747/1 01 S1) - (01 S1) D/S (092 - 010) (VGN092) (11 MAR 75)

REFERENCE DATA

SREF =	2699.0000 SQ.FT.	XMRP =	1109.0000 IN.XO
LREF =	474.8100 IN.	YMRP =	.0000 IN.YO
BREF =	935.6900 IN.	ZMRP =	375.0000 IN.ZO
SCALE =	.0300		

PARAMETRIC DATA

ALPHAC =	4.000	BETAC =	5.000
ELV-IB =	.000	ELV-OB =	3.000
ELEVON =	5.000	MACH =	.600
PHI =	7.500	DX =	.000
DY =	10.000	BETAD =	.000

RN/L = 3.39 GRADIENT INTERVAL = .00/ 12.00

ALPHAO = 10.000

DZ	DCN	DCA	DCLM	DCY	DCBL	DCYN	DCL	DCD	DCSL	DCLN
.000	-.17100	.00928	.05768	.00834	-.00979	-.00555	-.17001	-.02055	-.01082	-.00387
3.000	-.15554	.00716	.05365	.00553	-.00721	-.00428	-.15492	-.01939	-.00784	-.00295
7.500	-.14001	.00617	.04314	.00508	-.00542	-.00329	-.12895	-.01854	-.00591	-.00230
15.000	-.11593	.00371	.03179	.00334	-.00357	-.00185	-.11481	-.01648	-.00394	-.00120
30.000	-.08652	.00221	.02221	.00265	-.00177	.00015	-.08559	-.01285	-.00171	.00046
45.000	-.06379	.00123	.01439	.00283	-.00106	.00092	-.06303	-.00987	-.00068	.00109
60.000	-.03792	.00055	.00462	.00259	-.00029	.00150	-.03744	-.00603	-.00002	.00152
GRADIENT	.00408	-.00040	-.00320	-.00016	.00057	.00031	.00409	.00031	.00001	.00020

RN/L = 3.31 GRADIENT INTERVAL = .00/ 12.00

ALPHAO = 14.000

DZ	DCN	DCA	DCLM	DCY	DCBL	DCYN	DCL	DCD	DCSL	DCLN
.000	-.11195	.00535	.07427	.00016	-.00750	-.00162	-.10992	-.02169	-.00767	.00024
3.000	-.10253	.00211	.05950	-.00093	-.00438	-.00066	-.10005	-.02277	-.00441	.00041
7.500	-.09057	-.00007	.04132	-.00183	-.00135	.00015	-.08765	-.02163	-.00129	.00047
15.000	-.07454	-.00028	.02730	-.00203	.00039	.00095	-.07225	-.01830	.00059	.00074
30.000	-.05508	.00242	.01686	-.00002	.00031	.00136	-.05500	-.01122	.00063	.00124
45.000	-.04628	.00440	.01269	.00124	.00021	.00169	-.04595	-.00692	.00061	.00159
60.000	-.03825	.00591	.00643	.00287	.00018	.00206	-.03852	-.00362	.00067	.00195
GRADIENT	.00284	-.00070	-.00435	-.00026	.00081	.00023	.00292	.00000	.00064	.00003

CA20 (747/1 01 S1) - (01 S1) D/S (093 - 010) (VGN093) (11 MAR 75)

REFERENCE DATA

SREF =	2690.0000 SQ.FT.	XMRP =	1109.0000 IN.XO
LREF =	474.8100 IN.	YMRP =	.0000 IN.YO
BREF =	936.6800 IN.	ZMRP =	375.0000 IN.ZO
SCALE =	.0300		

PARAMETRIC DATA

ALPHAC =	4.000	BETAC =	5.000
ELV-IB =	.000	ELV-OB =	3.000
ELEVON =	5.000	MACH =	.600
PHI =	7.500	DX =	10.000
DY =	10.000	BETAO =	.000

RN/L = 3.28 GRADIENT INTERVAL = .00/ 12.00

ALPHAO = 10.000

DZ	DCN	DCA	DCLM	DCY	DCBL	DCYN	DCL	DCD	DCSL	DCLN
.000	-.17685	.00740	.05059	.00212	-.00962	-.00546	-.17466	-.02329	-.00943	-.00398
3.000	-.15972	.00513	.03919	.00108	-.00570	-.00443	-.15818	-.02269	-.00735	-.00320
7.500	-.14258	.00365	.03167	-.00003	-.00510	-.00345	-.14105	-.02116	-.00592	-.00251
15.000	-.12063	.00326	.02544	-.00133	-.00334	-.00208	-.11935	-.01773	-.00365	-.00147
30.000	-.08931	.00203	.01959	-.00182	-.00176	-.00086	-.08830	-.01351	-.00178	.00004
45.000	-.06630	.00051	.01442	-.00079	-.00134	.00032	-.06589	-.01110	-.00126	.00054
60.000	-.04569	-.00219	.00892	.00045	-.00128	.00069	-.04402	-.00993	-.00115	.00089
GRADIENT	.00441	-.00049	-.00246	-.00028	.00046	.00026	.00443	.00029	.00050	.00018

RN/L = 3.25 GRADIENT INTERVAL = .00/ 12.00

ALPHAO = 14.000

DZ	DCN	DCA	DCLM	DCY	DCBL	DCYN	DCL	DCD	DCSL	DCLN
.000	-.15492	.00413	.07391	-.01126	-.00726	-.00226	-.15131	-.03347	-.00759	-.00243
3.000	-.13791	-.00046	.05449	-.01167	-.00391	-.00178	-.13370	-.03381	-.00423	-.00078
7.500	-.11542	-.00469	.03595	-.01295	-.00137	-.00105	-.11085	-.03246	-.00159	-.00069
15.000	-.08977	-.00659	.02165	-.01386	.00106	-.00003	-.08551	-.02810	.00103	-.00028
30.000	-.06475	-.00262	.01265	-.01057	.00125	-.00012	-.06219	-.01821	.00118	-.00042
45.000	-.05548	.00173	.01193	-.00865	.00058	-.00008	-.05425	-.01174	.00054	-.00022
60.000	-.04694	.00334	.01182	-.00540	.00012	.00018	-.04625	-.00809	.00016	.00015
GRADIENT	.00524	-.00116	-.00485	-.00023	.00077	.00016	.00537	.00015	.00078	-.00003

CA20 (747/1 01 S1) - (01 S1) D/S (094 - 010) (VGN094) (11 MAR 75)

REFERENCE DATA

SREF =	2590.0000 SQ.FT.	XMRP =	1109.0000 IN.XO
LREF =	474.8100 IN.	YMRP =	.0000 IN.YO
BREF =	936.6800 IN.	ZMRP =	375.0000 IN.ZO
SCALE =	.0300		

PARAMETRIC DATA

ALPHAC =	8.000	BETAC =	5.000
ELV-IB =	.000	ELV-OB =	3.000
ELEVON =	5.000	MACH =	.600
PHI =	7.500	DX =	.000
DY =	10.000	BETAO =	.000

RN/L = 3.26 GRADIENT INTERVAL = .00/ 12.00

ALPHAO = 10.000

DZ	DCN	DCA	DCLM	DCY	DCBL	DCYN	DCL	DCD	DCSL	DCLN
.000	-.31201	.01351	.05160	.01153	-.00909	-.00594	-.30962	-.04087	-.01077	-.00413
3.000	-.22834	.01254	.04389	.00997	-.00737	-.00493	-.22663	-.03781	-.00912	-.00369
7.500	-.25765	.01146	.03722	.00779	-.00519	-.00363	-.25572	-.03345	-.00574	-.00268
15.000	-.21508	.00971	.03045	.00431	-.00312	-.00200	-.21350	-.02779	-.00342	-.00143
30.000	-.15403	.00745	.02350	.00278	-.00177	-.00087	-.15289	-.01942	-.00176	.00024
45.000	-.11379	.00537	.01706	.00274	-.00135	.00067	-.11259	-.01447	-.00121	.00089
60.000	-.07540	.00334	.01188	.00269	-.00109	.00123	-.07464	-.00931	-.00086	.00140
GRADIENT	.00722	-.03027	-.00189	-.00050	.00062	.00031	.00716	.00099	.00066	.00019

RN/L = 3.28 GRADIENT INTERVAL = .00/ 12.00

ALPHAO = 14.000

DZ	DCN	DCA	DCLM	DCY	DCBL	DCYN	DCL	DCD	DCSL	DCLN
.000	-.24055	.00149	.06149	.00926	-.00950	-.00355	-.24163	-.05970	-.01010	-.00124
3.000	-.22455	-.00069	.04621	.00569	-.00599	-.00193	-.21765	-.05519	-.00629	-.00047
7.500	-.19765	-.00195	.03414	.00185	-.00282	-.00032	-.19130	-.04971	-.00222	.00037
15.000	-.16272	-.00697	.02632	-.00102	-.00118	.00102	-.15717	-.04225	-.00050	.00127
30.000	-.11475	-.00201	.01665	-.00221	.00130	.00250	-.11086	-.02972	.00187	.00211
45.000	-.08565	.00018	.01557	-.00166	.00187	.00312	-.08431	-.02064	.00257	.00258
60.000	-.06862	.00271	.01333	.00075	.00172	.00312	-.06724	-.01397	.00243	.00261
GRADIENT	.00674	-.00044	-.00357	-.00098	.00089	.00044	.00664	.00120	.00095	.00021

CA20 (747/1 01 S1) - (01 S1) D/S (095 - 010) (VGN095) (11 MAR 75)

REFERENCE DATA

SREF =	2690.0000 SQ.FT.	XMRP =	1109.0000 IN.XO
LREF =	474.8100 IN.	YMRP =	.0000 IN.YO
BREF =	936.6900 IN.	ZMRP =	375.0000 IN.ZO
SCALE =	.0300		

PARAMETRIC DATA

ALPHAC =	8.000	BETAC =	5.000
ELV-IB =	.000	ELV-OB =	3.000
ELEVON =	5.000	MACH =	.600
PHI =	7.500	OX =	10.000
DY =	10.000	BETAO =	.000

RN/L = 3.26 GRADIENT INTERVAL = .00/ 12.00

ALPHAO = 10.000

DZ	DCN	DCA	DCLM	DCY	DCBL	DCYN	DCL	DCD	DCSL	DCLN
.000	-.31494	.01209	.02998	.00592	-.00781	-.00513	-.31225	-.04279	-.00838	-.00373
3.000	-.29376	.01102	.02480	.00356	-.00549	-.00428	-.29121	-.04016	-.00615	-.00326
7.500	-.26328	.00984	.02055	.00126	-.00367	-.00362	-.26099	-.03503	-.00424	-.00293
15.000	-.22549	.00930	.01923	-.00113	-.00231	-.00235	-.22359	-.03000	-.00269	-.00191
30.000	-.16234	.00669	.01628	-.00127	-.00142	-.00092	-.16103	-.02161	-.00154	-.00055
45.000	-.12136	.00482	.01414	-.00089	-.00116	-.00003	-.12035	-.01633	-.00115	.00017
60.000	-.09202	.00573	.01748	.00179	-.00012	.00239	-.09161	-.01033	.00030	.00239
GRADIENT	.00698	-.00030	-.00123	-.00050	.00052	.00020	.00683	.00090	.00054	.00010

RN/L = 3.25 GRADIENT INTERVAL = .00/ 12.00

ALPHAO = 14.000

DZ	DCN	DCA	DCLM	DCY	DCBL	DCYN	DCL	DCD	DCSL	DCLN
.000	-.27915	-.00069	.04548	-.00127	-.00931	-.00542	-.27069	-.06921	-.01035	-.00301
3.000	-.24330	-.00786	.02422	-.00461	-.00623	-.00432	-.23418	-.06549	-.00709	-.00269
7.500	-.21739	-.00228	.01913	-.00693	-.00444	-.00339	-.20592	-.06062	-.00513	-.00222
15.000	-.17680	-.00954	.01080	-.01082	-.00294	-.00146	-.16644	-.05193	-.00321	-.00070
30.000	-.12120	-.01081	.00447	-.01235	.00065	.00029	-.11499	-.03981	.00071	.00012
45.000	-.09787	-.00541	.01147	-.01195	.00219	.00135	-.09365	-.02892	.00245	.00078
60.000	-.08095	-.00114	.01492	-.00927	.00334	.00214	-.07827	-.02059	.00376	.00127
GRADIENT	.00804	-.00094	-.00333	-.00074	.00063	.00026	.00803	.00103	.00068	.00010

CAE0 (747/1 01 S1) - (01 S1) D/S (095 - 007) (VGN095) (11 MAR 75)

REFERENCE DATA

SREF =	2888.0000 SQ.FT.	XMRP =	1109.0000 IN.XO		
LREF =	474.8100 IN.	YMRP =	.0000 IN.YO		
BREF =	933.6900 IN.	ZMRP =	375.0000 IN.ZO		
SCALE =	.0300				

PARAMETRIC DATA

ALPHAC =	4.000	BETAC =	-5.000
ELV-IB =	.000	ELV-OB =	3.000
ELEVON =	5.000	MACH =	.600
PHI =	7.500	DX =	.080
DY =	10.000	BETAO =	-5.000

RN/L = 3.28 GRADIENT INTERVAL = .00/ 12.00

ALPHAO = 10.000

DZ	DCN	DCA	DCLM	DCY	DCBL	DCYN	DCL	DCD	DCSL	DCLN
.000	-.12330	.00734	.04648	-.00300	.00415	.00059	-.12260	-.01917	.00419	-.00019
3.000	-.11025	.00495	.03702	-.00484	.00337	-.00016	-.10944	-.01427	.00329	-.00074
7.500	-.09733	.00331	.03140	-.00343	.00292	-.00040	-.09542	-.01354	.00281	-.00091
15.000	-.07803	.00151	.02616	-.00159	.00267	-.00049	-.07715	-.01207	.00255	-.00055
30.000	-.04973	.00035	.02048	.00159	.00237	-.00019	-.04903	-.00829	.00230	-.00060
45.000	-.03099	-.00038	.01475	.00284	.00201	.00002	-.03046	-.00576	.00193	-.00033
60.000	-.00967	-.00225	.00646	.00165	.00156	.00048	-.00913	-.00369	.00162	.00020
GRADIENT	.00340	-.00052	-.00195	.00022	-.00016	-.00013	.00344	.00008	-.00018	-.00010

RN/L = 3.28 GRADIENT INTERVAL = .00/ 12.00

ALPHAO = 14.000

DZ	DCN	DCA	DCLM	DCY	DCBL	DCYN	DCL	DCD	DCSL	DCLN
.000	-.07740	.01719	.05526	-.00189	.00481	.00072	-.07836	-.00205	.00407	-.00023
3.000	-.07145	.01465	.04628	-.00123	.00283	-.00048	-.07292	-.00265	.00263	-.00115
7.500	-.06501	.01264	.03554	-.00014	.00151	-.00130	-.06514	-.00346	.00115	-.00162
15.000	-.05528	.01165	.03001	.00182	.00031	-.00150	-.05546	-.00206	-.00007	-.00153
30.000	-.03456	.01134	.02122	.00691	-.00077	-.00139	-.03628	.00264	-.00108	-.00116
45.000	-.01830	.01156	.01463	.00738	-.00145	-.00104	-.02171	.00650	-.00166	-.00065
60.000	-.01006	.01114	.00838	.00696	-.00152	-.00049	-.01246	.00839	-.00160	-.00011
GRADIENT	.00163	-.00060	-.00259	.00023	-.00033	-.00026	.00173	-.00018	-.00039	-.00017

ORIGINAL PAGE IS
OF POOR QUALITY

CA20 (747/1 01 S1) - (01 S1) D/S (097 - 007) (VGN097) (1: MAR 75)

REFERENCE DATA

SREF = 2690.0000 SQ.FT. XMRP = 1109.0000 IN.XO
LREF = 474.8100 IN. YMRP = .0000 IN.YO
BREF = 936.6800 IN. ZMRP = 375.0000 IN.ZO
SCALE = .0300

PARAMETRIC DATA

ALPHAC =	8.000	BETAC =	-5.000
ELV-IB =	.000	ELV-OB =	3.000
ELEVON =	5.000	MACH =	.600
PHI =	7.500	DX =	.000
DY =	10.000	BETAO =	-5.000

RN/L = 3.25 GRADIENT INTERVAL = .00/ 12.00

ALPHAO = 10.000

DZ	DCN	DCA	DCLM	DCY	DCBL	DCYN	DCL	DCD	DCSL	DCLN
.000	-.27892	.01524	.03734	-.00065	-.00058	.00077	-.27733	-.03343	-.00042	.00085
3.000	-.25173	.01310	.03480	-.00397	-.00112	.00066	-.25018	-.03081	-.00099	.00084
7.500	-.21948	.01120	.03228	-.00420	-.00154	.00002	-.21810	-.02708	-.00151	.00028
15.000	-.17820	.00910	.03024	-.00297	-.00112	-.00020	-.17707	-.02199	-.00114	-.00000
30.000	-.11574	.00584	.02482	-.00023	.00005	.00041	-.11499	-.01434	.00012	.00039
45.000	-.07793	.00415	.01964	.00224	.00058	.00022	-.07752	-.00946	.00081	.00011
60.000	-.03947	.00323	.01428	.00917	.00184	-.00262	-.03943	-.00369	.00136	-.00293
GRADIENT	.00787	-.00053	-.00067	-.00044	-.00013	-.00010	.00784	.00064	-.00014	-.00008

RN/L = 3.26 GRADIENT INTERVAL = .00/ 12.00

ALPHAO = 14.000

DZ	DCN	DCA	DCLM	DCY	DCBL	DCYN	DCL	DCD	DCSL	DCLN
.000	-.21580	.01119	.05873	-.00063	.00522	.00084	-.21210	-.04135	.00527	-.00045
3.000	-.19630	.01021	.05313	-.00041	.00472	-.00056	-.19294	-.03758	.00444	-.00163
7.500	-.17323	.00926	.04798	-.00176	.00425	-.00065	-.17032	-.03293	.00397	-.00167
15.000	-.14004	.00932	.04178	-.00092	.00300	-.00092	-.13814	-.02484	.00271	-.00152
30.000	-.09807	.01316	.03170	.00543	-.00149	-.00172	-.09335	-.01095	-.00186	-.00131
45.000	-.06364	.01271	.02270	.00674	-.00188	-.00140	-.06482	-.00307	-.00216	-.00090
60.000	-.04183	.01236	.01467	.00831	-.00195	-.00109	-.04359	.00187	-.00217	-.00053
GRADIENT	.00563	-.00025	-.00141	-.00016	-.00013	-.00019	.00553	.00112	-.00017	-.00015

CA20 (747/1 01 S1) - (01 S1) D/S (090 - 007) (VGN099) (11 MAR 75)

REFERENCE DATA

SREF = 2690.0000 SQ.FT.	XMRP = 1109.0000 IN.XO		
LREF = 474.8100 IN.	YMRP = .0000 IN.YO		
BREF = 930.6900 IN.	ZMRP = 375.0000 IN.ZO		
SCALE = .0300			

PARAMETRIC DATA

ALPHAC =	4.000	BETAC =	.000
ELV-IB =	.000	ELV-OB =	3.000
ELEVON =	5.000	MACH =	.690
PHI =	7.500	DX =	.000
DY =	10.000	BETAO =	-5.000

RN/L = 3.29 GRADIENT INTERVAL = .00/ 12.00

ALPHAO = 10.000

DZ	DCN	DCA	DCLM	DCY	DCBL	DCYN	DCL	DCD	DCSL	DCLN
.000	-.11034	.00249	.04673	.00241	-.00016	-.00273	-.11667	-.01810	-.00053	-.00035
3.000	-.10691	.00108	.03879	.00099	.00001	-.00224	-.10547	-.01751	-.00057	-.00021
7.500	-.09354	.00071	.03202	.00123	.00042	-.00222	-.09225	-.01554	.00003	-.00026
15.000	-.07600	-.00034	.02674	-.00071	.00090	-.00112	-.07478	-.01353	.00059	-.00126
30.000	-.04787	-.00011	.02055	.00277	.00157	-.00123	-.04713	-.00842	.00133	-.00149
45.000	-.03051	.00010	.01532	.00400	.00157	-.00084	-.03005	-.00520	.00140	-.00110
60.000	-.01673	.00131	.01007	.00474	.00140	-.00042	-.01670	-.00161	.00130	-.00065
GRADIENT	.00324	-.00022	-.00193	-.00012	.00008	.00006	.00323	.00035	.00009	.00005

RN/L = 3.27 GRADIENT INTERVAL = .00/ 12.00

ALPHAO = 14.000

DZ	DCN	DCA	DCLM	DCY	DCBL	DCYN	DCL	DCD	DCSL	DCLN
.000	-.08401	.01091	.05359	.00470	-.00011	-.00261	-.08472	-.00500	-.00074	-.00250
3.000	-.08155	.00922	.04537	.00428	-.00007	-.00267	-.08195	-.00595	-.00071	-.00229
7.500	-.05771	.00642	.03653	.00413	-.00015	-.00272	-.05803	-.00579	-.00080	-.00230
15.000	-.04920	.00936	.02978	.00327	-.00055	-.00201	-.05000	-.00283	-.00102	-.00182
30.000	-.03146	.01075	.02129	.00815	-.00114	-.00173	-.03312	.00282	-.00153	-.00140
45.000	-.01759	.01150	.01444	.00725	-.00150	-.00143	-.01985	.00590	-.00181	-.00103
60.000	-.00954	.01213	.00852	.00671	-.00165	-.00092	-.01229	.00544	-.00164	-.00049
GRADIENT	.00084	-.00031	-.00225	-.00007	-.00001	-.00001	.00069	-.00009	-.00001	-.00001

CA20 (747/1 01 S1) - (01 S1) D/S (095 - 007) (VGK099) (11 MAR 75)

REFERENCE DATA

SREF = 2690.0000 SQ.FT. XMRP = 1109.0000 IN.XO
LREF = 474.8100 IN. YMRP = .0000 IN.YO
BREF = 935.6800 IN. ZMRP = 375.0000 IN.ZO
SCALE = .0300

PARAMETRIC DATA

ALPHAC =	8.000	BETAC =	.000
ELV-IB =	.000	ELV-OB =	3.000
ELEVON =	5.000	MACH =	.800
PHI =	7.500	DX =	.000
DY =	10.000	BETAO =	-5.000

RN/L = 3.25 GRADIENT INTERVAL = .00/ 12.00

ALPHAO = 10.000

DZ	DCN	DCA	DCLM	DCY	DCBL	DCYN	DCL	DCD	DCSL	DCLN
.000	-.27351	.01129	.04247	.00752	-.00600	-.00230	-.27132	-.03637	-.00630	-.00123
3.000	-.24726	.01060	.03690	.00468	-.00494	-.00192	-.24535	-.03250	-.00520	-.00103
7.500	-.21750	.00937	.03409	.00175	-.00397	-.00147	-.21582	-.02854	-.00416	-.00076
15.000	-.17709	.00756	.03137	-.00068	-.00273	-.00082	-.17572	-.02330	-.00283	-.00034
30.000	-.11796	.00483	.02604	-.00071	-.00057	.00030	-.11701	-.01572	-.00051	.00039
45.000	-.07855	.00375	.02013	.00111	.00021	.00041	-.07800	-.00995	.00028	.00037
60.000	-.03954	.00422	.01410	.00579	.00098	-.00064	-.03967	-.00271	.00085	-.00080
GRADIENT	.00740	-.00026	-.00108	-.00076	.00027	.00011	.00733	.00103	.00028	.00006

RN/L = 3.77 GRADIENT INTERVAL = .00/ 12.00

ALPHAO = 14.000

DZ	DCN	DCA	DCLM	DCY	DCBL	DCYN	DCL	DCD	DCSL	DCLN
.000	-.21609	.00840	.06538	.00984	.00020	-.00260	-.21171	-.04413	-.00043	-.00257
3.000	-.19520	.00770	.05660	.00777	.00137	-.00238	-.19126	-.03976	.00075	-.00264
7.500	-.17062	.00763	.04955	.00525	.00214	-.00212	-.16740	-.03387	.00157	-.00257
15.000	-.13643	.00791	.04245	.00218	.00268	-.00130	-.13429	-.02533	.00229	-.00191
30.000	-.09674	.01236	.03231	.00585	-.00164	-.00183	-.09585	-.01141	-.00204	-.00138
45.000	-.06269	.01199	.02285	.00657	-.00187	-.00127	-.06373	-.00353	-.00212	-.00078
60.000	-.03995	.01228	.01520	.00744	-.00208	-.00064	-.04174	.00225	-.00217	-.00012
GRADIENT	.00602	-.00009	-.00205	-.00061	.00025	.00006	.00586	.00136	.00026	.00000

CA20 (747/1 01 S1) - (01 S1) D/S (100 - 007) (VGN100) (11 MAR 75)

REFERENCE DATA

SREF =	2590.0000 SQ.FT.	XMRP =	1109.0000 IN.XO
LREF =	474.8100 IN.	YMRP =	.0000 IN.YO
BREF =	936.6300 IN.	ZMRP =	375.0000 IN.ZO
SCALE =	.0300		

PARAMETRIC DATA

ALPHAC =	4.000	BETAC =	5.000
ELV-IB =	.000	ELV-OB =	3.000
ELEVON =	5.000	MACH =	.600
PHI =	7.500	DX =	.000
DY =	10.000	BETAO =	-5.000

RN/L = 3.31 GRADIENT INTERVAL = .00/ 12.00

ALPHAO = 10.000

DZ	DCN	DCA	DCLM	DCY	DCBL	DCYN	DCL	DCD	DCSL	DCLN
.000	-.14320	.00484	.08254	.00564	-.00533	-.00781	-.14172	-.02089	-.00756	-.00640
3.000	-.12328	.00192	.06155	.00512	-.00410	-.00613	-.12174	-.01951	-.00510	-.00533
7.500	-.10016	.00164	.04196	.00530	-.00229	-.00511	-.09892	-.01578	-.00314	-.00463
15.000	-.07718	.00144	.03067	.00423	-.00067	-.00398	-.07626	-.01193	-.00135	-.00391
30.000	-.04919	.00028	.02226	.00384	.00081	-.00239	-.04849	-.00826	.00039	-.00249
45.000	-.03042	.00018	.01627	.00484	.00123	-.00162	-.02999	-.00510	.00093	-.00181
60.000	-.00819	-.00102	.01027	.00359	.00145	.00017	-.00788	-.00243	.00145	-.00008
GRADIENT	.00569	-.00030	-.00533	-.00004	.00053	.00033	.00566	.00069	.00058	.00023

RN/L = 3.28 GRADIENT INTERVAL = .00/ 12.00

ALPHAO = 14.000

DZ	DCN	DCA	DCLM	DCY	DCBL	DCYN	DCL	DCD	DCSL	DCLN
.000	-.08059	.01316	.09975	.00527	-.00312	-.00467	-.08914	-.00866	-.00415	-.00477
3.000	-.07818	.01017	.07758	.00508	-.00249	-.00450	-.07832	-.00805	-.00350	-.00377
7.500	-.06376	.00852	.05269	.00535	-.00172	-.00419	-.06393	-.00716	-.00259	-.00365
15.000	-.04866	.00970	.03567	.00511	-.00125	-.00322	-.04956	-.00235	-.00199	-.00282
30.000	-.02995	.01067	.02321	.00509	-.00132	-.00173	-.03164	.00311	-.00170	-.00136
45.000	-.01695	.01144	.01519	.00635	-.00154	-.00136	-.01912	.00702	-.00182	-.00094
60.000	-.00803	.01147	.00868	.00705	-.00180	-.00052	-.01057	.00919	-.00197	-.00005
GRADIENT	.00330	-.00060	-.00622	.00001	.00018	.00008	.00335	.00022	.00019	.00002

CA20 (747/1 01 S11 - (01 S1) D/S (101 - 007) (VGN101) (11 MAR 75)

REFERENCE DATA

SREF =	2690.0000 SQ.FT.	XMRP =	1109.0000 IN.XO
LREF =	474.8100 IN.	YMRP =	.0000 IN.YO
BREF =	936.6800 IN.	ZMRP =	375.0000 IN.ZO
SCALE =	.0300		

PARAMETRIC DATA

ALPHAC =	8.000	BETAC =	5.000
ELV-IB =	.000	ELV-OB =	3.000
ELEVON =	5.000	MACH =	.600
PHI =	7.500	DX =	.000
DY =	10.000	BETAO =	-5.000

RN/L = 3.25 GRADIENT INTERVAL = .00/ 12.00

ALPHAO = 10.000

DZ	DCN	DCA	DCLM	DCY	DCBL	DCYN	DCL	DCD	DCSL	DCLN
.000	-.28225	.01014	.06951	.00629	-.01065	-.00671	-.27972	-.03903	-.01165	-.00476
3.000	-.25184	.00991	.05224	.00466	-.00825	-.00483	-.24973	-.03397	-.00895	-.00333
7.500	-.21826	.00875	.04238	.00155	-.00631	-.00300	-.21647	-.02928	-.00573	-.00186
15.000	-.17581	.00757	.03507	.00039	-.00418	-.00203	-.17446	-.02308	-.00447	-.00127
30.000	-.11534	.00486	.02693	-.00149	-.00168	.00004	-.11443	-.01524	-.00165	.00033
45.000	-.07664	.00364	.02088	-.00009	-.00055	.00032	-.07611	-.00972	-.00048	.00041
60.000	-.03424	.00298	.01579	.00177	.00030	.00022	-.03423	-.00301	.00033	.00017
GRADIENT	.00845	-.00019	-.00350	-.00063	.00057	.00049	.00835	.00128	.00064	.00038

RN/L = 3.27 GRADIENT INTERVAL = .00/ 12.00

ALPHAO = 14.000

DZ	DCN	DCA	DCLM	DCY	DCBL	DCYN	DCL	DCD	DCSL	DCLN
.000	-.22685	.00972	.09766	.01144	-.00580	-.00693	-.22246	-.04545	-.00728	-.00522
3.000	-.20352	.00829	.07897	.00959	-.00316	-.00527	-.19947	-.04120	-.00434	-.00435
7.500	-.17305	.00765	.06042	.00673	-.00054	-.00360	-.16977	-.03445	-.00139	-.00336
15.000	-.13526	.00780	.04729	.00328	.00168	-.00192	-.13312	-.02515	.00117	-.00227
30.000	-.08708	.00983	03426	.00356	.00069	-.00118	-.08687	-.01153	.00038	-.00132
45.000	-.05740	.01060	.02410	.00442	-.00073	-.00079	-.05926	-.00360	-.00090	-.00059
60.000	-.03629	.01198	.01573	.00703	-.00170	-.00097	-.03811	.00284	-.00188	-.00053
GRADIENT	.00714	-.00027	-.00490	-.00063	.00069	.00043	.00699	.00147	.00077	.00025

DATE 04 DEC 75 TABULATED SOURCE DATA - CA20 (VGN104) (1; MAR 75)

CA20 (747/) 01 S1) - (01 S1) D/S (104 - 007)

REFERENCE DATA

SREF = 2690.0000 SQ.FT. XMRP = 1109.0000 IN.XO
LREF = 474.8100 IN. YMRP = .0000 IN.YO
BREF = 936.6800 IN. ZMRP = 375.0000 IN.ZO
SCALE = .0300

PARAMETRIC DATA

ALPHAC =	4.000	BETAC =	-5.000
ELV-IB =	.000	ELV-OB =	3.000
ELEVON =	5.000	MACH =	.600
PHI =	.000	DX =	10.000
DY =	.000	BETAO =	-5.000

RN/L = 3.30 GRADIENT INTERVAL = .00/ 12.00

ALPHAO = 10.000

DZ	DCN	DCA	DCLM	DCY	DCBL	DCYN	DCL	DCD	DCSL	DCLN
.000	-.22891	.01248	.06229	-.01542	.00746	.00447	-.22760	-.02746	.00812	.00311
3.000	-.19592	.00848	.03924	-.01241	.00433	.00390	-.19441	-.02667	.00493	.00299
7.500	-.17122	.00659	.02619	-.00897	.00278	.00334	-.16978	-.02315	.00332	.00280
15.000	-.14337	.00548	.01814	-.00540	.00148	.00284	-.14214	-.01950	.00195	.00254
30.000	-.10655	.00489	.01147	-.00176	.00089	.00221	-.10578	-.01370	.00125	.00203
45.000	-.08483	.00492	.00831	-.00125	.00002	.00162	-.08440	-.00989	.00030	.00160
60.000	-.06210	.00543	.00471	.00003	-.00125	.00083	-.06210	-.00543	-.00108	.00109
GRADIENT	.00752	-.00074	-.00465	.00095	-.00060	-.00015	.00753	.00057	-.00062	-.00004

RN/L = 3.28 GRADIENT INTERVAL = .00/ 12.00

ALPHAO = 14.000

DZ	DCN	DCA	DCLM	DCY	DCBL	DCYN	DCL	DCD	DCSL	DCLN
.000	-.19455	.00931	.08846	-.01013	.01463	.00105	-.19102	-.03803	.01445	-.00052
3.000	-.16665	.00512	.05037	-.00942	.01103	.00214	-.16294	-.03535	.01122	-.00059
7.500	-.14059	.00302	.03786	-.00728	.00789	.00257	-.13753	-.03118	.00827	.00059
15.000	-.12336	.00601	.02624	-.00125	.00310	.00103	-.12114	-.02401	.00326	.00024
30.000	-.09897	.00951	.01690	.00354	-.00117	-.00004	-.09224	-.01469	-.00115	.00035
45.000	-.07915	.01038	.01079	.00412	-.00228	-.00028	-.07931	-.00908	-.00228	.00028
60.000	-.05731	.00609	.00750	.00023	.00159	.00167	-.05708	-.00795	.00195	.00123
GRADIENT	.00703	-.00081	-.00661	.00039	-.00068	.00019	.00701	.00091	-.00081	.00040

ORIGINAL PAGE IS
OF POOR QUALITY

DATE 04 DEC 75 TABULATED SOURCE DATA - CA20

CA20 (747/1 01 S1) - (01 S1) D/S (105 - 007) (VGN105) (11 MAR 75)

REFERENCE DATA

SREF =	2690.0000 SQ.FT.	XMRP =	1109.0000 IN.XO
LREF =	474.8100 IN.	YMRP =	.0000 IN.YO
BREF =	936.6800 IN.	ZMRP =	375.0000 IN.ZO
SCALE =	.0300		

PARAMETRIC DATA

ALPHAC =	8.000	BETAC =	-5.000
ELV-IB =	.000	ELV-OB =	3.000
ELEVON =	5.000	MACH =	.600
PHI =	.000	DX =	10.000
DY =	.000	BETAO =	-5.000

RN/L = 3.26 GRADIENT INTERVAL = .00/ 12.00

ALPHAO = 10.000

DZ	DCN	DCA	DCLM	DCY	DCBL	DCYN	DCL	DCD	DCSL	DCLN
.000	-.34662	.01758	.02299	-.02198	.00264	.00370	-.34441	-.04288	.00324	.00318
3.000	-.31847	.01562	.01767	-.01749	.00049	.00372	-.31634	-.03992	.00113	.00358
7.500	-.29150	.01351	.01612	-.01158	-.00060	.00313	-.28944	-.03722	-.00004	.00319
15.000	-.24594	.01216	.01292	-.00710	-.00192	.00265	-.24431	-.03073	-.00140	.00314
30.000	-.18242	.00966	.01178	-.00216	-.00176	.00250	-.18133	-.02217	-.00130	.00277
45.000	-.13893	.00848	.00973	-.00042	-.00220	.00147	-.13829	-.01577	-.00191	.00183
60.000	-.08741	.00699	.00831	.00254	-.00222	.00060	-.08728	-.00839	-.00208	.00098
GRADIENT	.00724	-.00052	-.00087	.00138	-.00042	-.00008	.00722	.00074	-.00042	-.00001

RN/L = 3.32 GRADIENT INTERVAL = .00/ 12.00

ALPHAO = 14.000

DZ	DCN	DCA	DCLM	DCY	DCBL	DCYN	DCL	DCD	DCSL	DCLN
.000	-.34534	.01593	.06604	-.02454	.01274	.00486	-.33894	-.05809	.01354	.00163
3.000	-.30114	.01251	.04071	-.01992	.00960	.00456	-.29522	-.05072	.01042	.00210
7.500	-.27204	.00979	.03494	-.01356	.00811	.00355	-.26533	-.05632	.00873	.00149
15.000	-.22593	.00750	.02756	-.00839	.00664	.00322	-.22104	-.04738	.00722	.00152
30.000	-.16259	.00551	.02110	-.00343	.00507	.00282	-.15909	-.03399	.00560	.00151
45.000	-.12191	.00560	.01529	-.00206	.00412	.00226	-.11965	-.02405	.00454	.00120
60.000	-.09476	.00537	.01162	-.00099	.00310	.00232	-.09324	-.01771	.00357	.00150
GRADIENT	.00951	-.00080	-.00392	.00146	-.00059	-.00018	.00942	.00152	-.00062	-.00003

CA20 (747/1 01 S1) - (01 S1) D/S (106 - 007) (VGN106) (11 MAR 75)

REFERENCE DATA

SREF = 2690.0000 SQ.FT. XMRP = 1109.0000 IN.XO
LREF = 474.8100 IN. YMRP = .0000 IN.YO
BREF = 936.6800 IN. ZMRP = 375.0000 IN.ZO
SCALE = .0300

PARAMETRIC DATA

ALPHAC =	4.000	BETAC =	-5.000
ELV-IB =	.000	ELV-OB =	3.000
ELEVON =	5.000	MACH =	.600
PHI =	.000	DX =	.000
DY =	10.000	BETAO =	-5.000

RUN NO. 0/ 0 RN/L = 3.31 GRADIENT INTERVAL = .00/ 12.00

ALPHAO	DZ	DCN	DCA	DCLM	DCY	DCBL	DCYN	DCL	DCD	DCSL	DCLN
10.000	.000	-.13511	.01329	.05907	-.00582	-.00111	.00045	-.13535	-.01055	-.00101	.00053
10.000	3.000	-.11248	.01110	.03518	-.00703	-.00105	.00028	-.11270	-.00960	-.00099	.00046
10.000	7.500	-.10473	.00949	.03078	-.00639	-.00137	.00006	-.10479	-.00884	-.00134	.00029
10.000	15.000	-.08891	.00825	.02459	-.00504	-.00147	.00019	-.08999	-.00731	-.00142	.00044
10.000	30.000	-.05772	.00738	.01939	-.00215	-.00114	.00062	-.06797	-.00449	-.00101	.00091
10.000	45.000	-.05253	.00655	.01453	-.00039	-.00101	.00072	-.05292	-.00237	-.00087	.00083
10.000	60.000	-.03824	.00620	.01012	.00147	-.00081	.00085	-.03677	-.00019	-.00065	.00083
	GRADIENT	.00399	-.00049	-.00357	-.00006	-.00004	-.00005	.00402	.00021	-.00005	-.00004

CA20 (747/1 01 S1) - (01 S1) D/S (107 - 007) (VGN107) (11 MAR 75)

REFERENCE DATA

SREF = 2690.0000 SQ.FT. XMRP = 1109.0000 IN.XO
LREF = 474.8100 IN. YMRP = .0000 IN.YO
BREF = 936.6800 IN. ZMRP = 375.0000 IN.ZO
SCALE = .0300

PARAMETRIC DATA

ALPHAC =	4.000	BETAC =	-5.000
ELV-IB =	.000	ELV-OB =	3.000
ELEVON =	5.000	MACH =	.600
PHI =	.000	DX =	10.000
DY =	10.000	BETAO =	-5.000

RN/L = 3.27 GRADIENT INTERVAL = .00/ 12.00

ALPHAO = 10.000

DZ	DCN	DCA	DCLM	DCY	DCBL	DCYN	DCL	DCD	DCSL	DCLN
.000	-.19769	.01316	.04743	-.00728	-.00052	.00045	-.19698	-.02137	-.00043	.00053
3.000	-.17109	.01005	.02833	-.00849	-.00117	.00058	-.17023	-.01991	-.00105	.00077
7.500	-.15688	.00799	.02280	-.00703	-.00171	.00052	-.15598	-.01937	-.00160	.00081
15.000	-.13512	.00619	.01774	-.00533	-.00204	.00047	-.13415	-.01737	-.00192	.00081
30.000	-.10655	.00471	.01432	-.00237	-.00159	.00087	-.10575	-.01385	-.00141	.00113
45.000	-.09719	.00396	.01086	-.00097	-.00142	.00085	-.08655	-.01124	-.00125	.00109
60.000	-.08559	.00319	.00772	.00069	-.00125	.00085	-.08514	-.00825	-.00108	.00106
GRADIENT	.00526	-.00067	-.00311	.00006	-.00016	.00001	.00530	.00025	-.00015	.00003

ORIGINAL PAGE IS
OF POOR QUALITY

CA20 (747/1 01 S1) - (01 S1) D/S (107 - 007) (VGN107) (11 MAR 75)

REFERENCE DATA

SREF = 2690.0000 SQ.FT. XMRP = 1109.0000 IN.XO
LREF = 474.8100 IN. YMRP = .0000 IN.YO
BREF = 936.6900 IN. ZMRP = 375.0000 IN.ZO
SCALE = .0300

PARAMETRIC DATA

ALPHAC =	4.000	BETAC =	-5.000
ELV-IB =	.000	ELV-OB =	3.000
ELEVON =	5.000	MACH =	.600
PHI =	.000	DX =	10.000
DY =	10.000	BETAO =	-5.000

RN/L = 3.25 GRADIENT INTERVAL = .00/ 12.00

ALPHAO = 14.000

DZ	DCN	DCA	DCLM	DCY	DCBL	DCYN	DCL	DCD	DCSL	DCLN
.000	-.18262	.01365	.07569	-.01232	.00519	.00386	-.18050	-.03093	.00597	.00249
3.000	-.15728	.00899	.05180	-.01081	.00466	.00242	-.15478	-.02932	.00511	.00122
7.500	-.13473	.00495	.03230	-.00850	.00402	.00104	-.13193	-.02779	.00415	.00004
15.000	-.11896	.00440	.02837	-.00599	.00283	.00065	-.11649	-.02451	.00295	.00014
30.000	-.09207	.00517	.01900	-.00209	.00169	.00092	-.09058	-.01726	.00186	.00048
45.000	-.07309	.00551	.01413	-.00029	.00110	.00100	-.07225	-.01233	.00131	.00070
60.000	-.05990	.00499	.00966	.00071	.00158	.00162	-.05835	-.00942	.00192	.00119
GRADIENT	.00628	-.00114	-.00567	.00051	-.00016	-.00037	.00637	.00041	-.00024	-.00032

CA20 (747/1 01 S1) - (01 S1) D/S (108 - 007) (VGN108) (11 MAR 75)

REFERENCE DATA

SREF = 2690.0000 SQ.FT. XMRP = 1109.0000 IN.XO
LREF = 474.8100 IN. YMRP = .0000 IN.YO
BREF = 936.6900 IN. ZMRP = 375.0000 IN.ZO
SCALE = .0300

PARAMETRIC DATA

ALPHAC =	8.000	BETAC =	-5.000
ELV-IB =	.000	ELV-OB =	3.000
ELEVON =	5.000	MACH =	.600
PHI =	.000	DX =	10.000
DY =	10.000	BETAO =	-5.000

RN/L = 3.24 GRADIENT INTERVAL = .00/ 12.00

ALPHAO = 10.000

DZ	DCN	DCA	DCLM	DCY	DCBL	DCYN	DCL	DCD	DCSL	DCLN
.000	-.33539	.01798	.01789	-.00625	-.00600	-.00031	-.33342	-.04053	-.00595	.00074
3.000	-.30785	.01630	.01468	-.00707	-.00654	-.00048	-.30601	-.03741	-.00662	.00065
7.500	-.28110	.01469	.01592	-.00618	-.00663	-.00081	-.27935	-.03443	-.00667	.00035
15.000	-.23809	.01261	.01576	-.00535	-.00631	-.00045	-.23667	-.02893	-.00629	.00065
30.000	-.17761	.01037	.01619	-.00210	-.00479	.00006	-.17671	-.02063	-.00471	.00069
45.000	-.13430	.00905	.01454	-.00015	-.00370	.00021	-.13393	-.01441	-.00351	.00065
60.000	-.08608	.00755	.01390	.00244	-.00239	.00044	-.08508	-.00751	-.00227	.00065
GRADIENT	.00714	-.00044	-.00022	.00002	-.00008	-.00007	.00711	.00080	-.00009	-.00005

CA20 (747/1 01 S1) - (01 S1) D/S (108 - 007) (VGN108) (11 MAR 75)

REFERENCE DATA

SREF =	2690.0000 SQ.FT.	XMRP =	1109.0000 IN.XO
LREF =	474.8100 IN.	YMRP =	.0000 IN.YO
BREF =	936.6800 IN.	ZMRP =	375.0000 IN.ZO
SCALE =	.0300		

PARAMETRIC DATA

ALPHAC =	8.000	BETAC =	-5.000
ELV-IB =	.000	ELV-OB =	3.000
ELEVON =	5.000	MACH =	.600
PHI =	.000	DX =	10.000
DY =	10.000	BETAO =	-5.000

RN/L = 3.26 GRADIENT INTERVAL = .00/ 12.00

ALPHAO = 14.000

DZ	DCN	DCA	DCLM	DCY	DCBL	DCYN	DCL	DCD	DCSL	DCLN
.000	-.31201	.01547	.04948	-.00711	.00030	.00042	-.30649	-.05047	.00039	.00033
3.000	-.28010	.01245	.03556	-.00694	.00043	-.00042	-.27480	-.05567	.00031	-.00051
7.500	-.25397	.00999	.03243	-.00723	.00035	-.00018	-.24884	-.05175	.00029	-.00026
15.000	-.21507	.00805	.02929	-.00622	.00085	.00013	-.21063	-.04422	.00095	-.00008
30.000	-.15718	.00642	.02516	-.00316	.00161	.00089	-.15406	-.03180	.00177	.00048
45.000	-.11745	.00595	.01995	-.00141	.00210	.00124	-.11540	-.02263	.00234	.00069
60.000	-.08846	.00572	.01442	.00012	.00226	.00170	-.08721	-.01585	.00261	.00110
GRADIENT	.00759	-.00072	-.00215	-.00002	.00000	-.00007	.00753	.00114	-.00001	-.00007

CA20 (747/1 01 S1) - (01 S1) D/S (109 - 007) (VGN109) (11 MAR 75)

REFERENCE DATA

SREF =	2690.0000 SQ.FT.	XMRP =	1109.0000 IN.XO
LREF =	474.8100 IN.	YMRP =	.0000 IN.YO
BREF =	936.6800 IN.	ZMRP =	375.0000 IN.ZO
SCALE =	.0300		

PARAMETRIC DATA

ALPHAC =	4.000	BETAC =	.000
ELV-IB =	.000	ELV-OB =	3.000
ELEVON =	5.000	MACH =	.600
PHI =	.000	DX =	10.000
DY =	.000	BETAO =	-5.000

RN/L = 3.27 GRADIENT INTERVAL = .00/ 12.00

ALPHAO = 10.000

DZ	DCN	DCA	DCLM	DCY	DCBL	DCYN	DCL	DCD	DCSL	DCLN
.000	-.20438	.01002	.04837	-.00315	-.00181	.00251	-.20301	-.02562	-.00135	.00278
3.000	-.18224	.00744	.03142	-.00369	-.00289	.00220	-.18076	-.02432	-.00169	.00253
7.500	-.16278	.00614	.02270	-.00301	-.00211	.00131	-.16138	-.02222	-.00165	.00165
15.000	-.13971	.00538	.01702	-.00271	-.00189	.00127	-.13852	-.01695	-.00164	.00158
30.000	-.10452	.00480	.01122	-.00164	-.00097	.00141	-.10377	-.01342	-.00092	.00154
45.000	-.08353	.00462	.00853	-.00164	-.00077	.00106	-.08307	-.00995	-.00057	.00118
60.000	-.06085	.00491	.00531	-.00098	-.00104	.00059	-.06078	-.00573	-.00092	.00076
GRADIENT	.00545	-.00050	-.00320	.00003	-.00004	-.00016	.00545	.00046	-.00005	-.00015

ORIGINAL PAGE IS
OF POOR QUALITY

CA20 (747/1 01 S1) - (01 S1) D/S (109 - 007) (VGN109) (11 MAR 75)

REFERENCE DATA

SREF = 2690.0000 SQ.FT. XMRP = 1109.0000 IN.XO
LREF = 474.8100 IN. YMRP = .0000 IN.YO
BREF = 936.6800 IN. ZMRP = 375.0000 IN.ZO
SCALE = .0300

PARAMETRIC DATA

ALPHAC =	4.000	BETAC =	.000
ELV-1B =	.000	ELV-0B =	3.000
ELEVON =	5.000	MACH =	.600
PHI =	.000	DX =	10.000
DY =	.000	BETAO =	-5.000

RN/L = 3.28 GRADIENT INTERVAL = .00/ 12.00

ALPHAO = 14.000

DZ	DCN	DCA	DCLM	DCY	DCBL	DCYN	DCL	DCD	DCSL	DCLN
.000	-.17960	.00827	.07778	-.00491	.00471	.00291	-.17626	-.03543	.00527	.00168
3.000	-.16071	.00396	.05784	-.00465	.00434	.00251	-.15690	-.03503	.00482	.00138
7.500	-.13678	.00172	.03720	-.00365	.00402	.00183	-.13313	-.03142	.00434	.00080
15.000	-.11376	.00242	.02491	-.00247	.00349	.00144	-.11096	-.02517	.00374	.00056
30.000	-.09487	.00789	.01638	.00219	-.00097	-.00012	-.09396	-.01530	-.00097	.00012
45.000	-.07682	.00928	.01112	.00248	-.00194	-.00024	-.07678	-.00959	-.00194	.00023
60.000	-.05629	.00538	.00781	-.00095	.00173	.00163	-.05592	-.00840	.00208	.00116
GRADIENT	.00568	-.00084	-.00535	.00017	-.00009	-.00014	.00571	.00055	-.00012	-.00012

CA20 (747/1 01 S1) - (01 S1) D/S (110 - 007) (VGN110) (11 MAR 75)

REFERENCE DATA

SREF = 2690.0000 SQ.FT. XMRP = 1109.0000 IN.XO
LREF = 474.8100 IN. YMRP = .0000 IN.YO
BREF = 936.6800 IN. ZMRP = 375.0000 IN.ZO
SCALE = .0300

PARAMETRIC DATA

ALPHAC =	8.000	BETAC =	.000
ELV-1B =	.000	ELV-0B =	3.000
ELEVON =	5.000	MACH =	.600
PHI =	.000	DX =	10.000
DY =	.000	BETAO =	-5.000

RN/L = 3.28 GRADIENT INTERVAL = .00/ 12.00

ALPHAO = 10.000

DZ	DCN	DCA	DCLM	DCY	DCBL	DCYN	DCL	DCD	DCSL	DCLN
.000	-.33973	.01659	.01996	-.00064	-.00623	.00285	-.33745	-.04265	-.00554	.00389
3.000	-.31456	.01484	.01615	-.00209	-.00628	.00217	-.31235	-.04001	-.00581	.00323
7.500	-.28941	.01330	.01665	-.00299	-.00603	.00177	-.28732	-.03718	-.00563	.00279
15.000	-.24449	.01165	.01445	-.00300	-.00524	.00140	-.24280	-.03089	-.00492	.00229
30.000	-.18114	.00979	.01329	-.00101	-.00359	.00143	-.18009	-.02181	-.00339	.00203
45.000	-.13928	.00871	.01070	-.00031	-.00264	.00054	-.13769	-.01544	-.00246	.00128
60.000	-.08776	.00747	.00880	.00095	-.00132	.00048	-.08773	-.00789	-.00122	.00070
GRADIENT	.00662	-.00043	-.00040	-.00030	.00003	-.00014	.00650	.00072	.00000	-.00014

CA20 (747/1 01 S1) - (01 S1) D/S (110 - 007) (VGN110) (11 MAR 75)

REFERENCE DATA

SREF = 2690.0000 SQ.FT. XMRP = 1109.0000 IN.XO
LREF = 474.8100 IN. YMRP = .0000 IN.YO
BREF = 936.6800 IN. ZMRP = 375.0000 IN.ZO
SCALE = .0300

PARAMETRIC DATA

ALPHAC =	8.000	BETAC =	.000
ELV-IB =	.000	ELV-OB =	3.000
ELEVON =	5.000	MACH =	.600
PHI =	.000	DX =	10.000
DY =	.000	BETAO =	-5.000

RN/L = 3.29 GRADIENT INTERVAL = .00/ 12.00

ALPHAO = 14.000

DZ	DCN	DCA	DCLM	DCY	DCBL	DCYN	DCL	DCD	DCSL	DCLN
.000	-.32367	.01407	.05310	-.00105	.00184	.00273	-.31746	-.05465	.00245	.00221
3.000	-.30568	.01209	.04067	-.00331	.00194	.00281	-.29952	-.05222	.00255	.00225
7.500	-.28119	.00882	.03200	-.00293	.00229	.00180	-.25557	-.05463	.00286	.00119
15.000	-.22502	.00746	.02805	-.00329	.00267	.00196	-.22014	-.04720	.00306	.00126
30.000	-.16134	.00577	.02213	-.00180	.00335	.00195	-.15784	-.03344	.00373	.00108
45.000	-.12172	.00561	.01646	-.00190	.00335	.00193	-.11947	-.02401	.00371	.00105
60.000	-.08470	.00554	.01232	-.00100	.00276	.00199	-.09325	-.01743	.00315	.00127
GRADIENT	.00845	-.00070	-.00274	-.00022	.00006	-.00013	.00837	.00135	.00003	-.00014

CA20 (747/1 01 S1) - (01 S1) D/S (111 - 007) (VGN111) (11 MAR 75)

REFERENCE DATA

SREF = 2690.0000 SQ.FT. XMRP = 1109.0000 IN.XO
LREF = 474.8100 IN. YMRP = .0000 IN.YO
BREF = 936.6800 IN. ZMRP = 375.0000 IN.ZO
SCALE = .0300

PARAMETRIC DATA

ALPHAC =	4.000	BETAC =	.000
ELV-IB =	.000	ELV-OB =	3.000
ELEVON =	5.000	MACH =	.600
PHI =	.000	DX =	.000
DY =	10.000	BETAO =	-5.000

RUN NO. 0/ 0 RN/L = 3.33 GRADIENT INTERVAL = .00/ 12.00

ALPHAO	DZ	DCN	DCA	DCLM	DCY	DCBL	DCYN	DCL	DCD	DCSL	DCLN
10.000	.000	-.12284	.00856	.05317	-.00387	-.00574	-.00106	-.12246	-.01291	-.00583	-.00005
10.000	3.000	-.10975	.00712	.03806	-.00243	-.00456	-.00208	-.10932	-.01205	-.00485	-.00126
10.000	7.500	-.10118	.00649	.03163	-.00338	-.00390	-.00148	-.10077	-.01118	-.00409	-.00078
10.000	15.000	-.08626	.00629	.02535	-.00331	-.00304	-.00100	-.08604	-.00878	-.00317	-.00046
10.000	30.000	-.05473	.00627	.01948	-.00219	-.00185	.00003	-.06483	-.00507	-.00182	.00035
10.000	45.000	-.05095	.00625	.01460	-.00071	-.00131	.00043	-.05126	-.00269	-.00122	.00065
10.000	60.000	-.03603	.00622	.01021	.00074	-.00070	.00032	-.03555	-.00013	-.00054	.00093
	GRADIENT	.00281	-.00026	-.00276	.00004	.00024	-.00004	.00281	.00023	.00023	-.00008

CA20 (747/1 01 S1) - (01 S1) D/S (112 - 007) (VGN112) (11 MAR 75)

REFERENCE DATA

SREF = 2690.0000 SQ.FT. XMRP = 1109.0000 IN.XO
LREF = 474.8100 IN. YMRP = .0000 IN.YO
BREF = 935.6900 IN. ZMRP = 375.0000 IN.ZO
SCALE = .0300

PARAMETRIC DATA

ALPHAC = 4.000 BETAC = .000
ELV-1B = .000 ELV-09 = 3.000
ELEVON = 5.000 MACH = .600
PHI = .000 DX = 10.000
DY = 10.000 BETAO = -5.000

RN/L = 3.28 GRADIENT INTERVAL = .00/ 12.00

ALPHAO = 10.000

DZ	DCN	DCA	DCLM	DCY	DCBL	DCYN	DCL	DCD	DCSL	DCLN
.000	-.17278	.00811	.04165	-.00341	-.00667	-.00145	-.17122	-.02399	-.00582	-.00027
3.000	-.15423	.00461	.02628	-.00316	-.00573	-.00173	-.15268	-.02224	-.00594	-.00071
7.500	-.14416	.00392	.02270	-.00382	-.00511	-.00131	-.14265	-.02117	-.00526	-.00040
15.000	-.12572	.00380	.01784	-.00405	-.00405	-.00085	-.12447	-.01809	-.00414	-.00013
30.000	-.10051	.00338	.01457	-.00269	-.00280	.00008	-.09957	-.01412	-.00275	.00056
45.000	-.08391	.00320	.01131	-.00127	-.00209	.00016	-.08319	-.01142	-.00203	.00052
60.000	-.06541	.00308	.00871	.00018	-.00129	.00030	-.06496	-.00833	-.00122	.00052
GRADIENT	.00369	-.00028	-.00239	-.00005	.00020	.00002	.00369	.00036	.00020	-.00001

RN/L = 3.24 GRADIENT INTERVAL = .00/ 12.00

ALPHAO = 14.000

DZ	DCN	DCA	DCLM	DCY	DCBL	DCYN	DCL	DCD	DCSL	DCLN
.000	-.15821	.00236	.06195	-.00787	-.00163	.00176	-.15409	-.03599	-.00115	.00210
3.000	-.14077	.00110	.04334	-.00632	-.00043	.00052	-.13686	-.03289	-.00029	.00061
7.500	-.12539	.00033	.02930	-.00537	.00050	-.00020	-.12175	-.03001	.00043	-.00031
15.000	-.11180	.00114	.02546	-.00533	.00116	.00024	-.10875	-.02594	.00118	-.00005
30.000	-.08586	.00289	.01895	-.00320	.00184	.00085	-.08404	-.01787	.00199	.00039
45.000	-.06939	.00403	.01421	-.00193	.00175	.00121	-.06830	-.01288	.00199	.00075
60.000	-.05727	.00444	.00972	-.00024	.00182	.00146	-.05654	-.00935	.00212	.00097
GRADIENT	.00430	-.00026	-.00426	.00032	.00028	-.00025	.00424	.00079	.00021	-.00031

DATE 04 DEC 75 TABULATED SOURCE DATA - CA20

CA20 (747/1 01 S1) - (01 S1) D/S (113 - 007) (VGN113) (14 MAR 75)

REFERENCE DATA

SREF =	2690.0000 SQ.FT.	XMRP =	1109.0000 IN.XO		
LREF =	474.8100 IN.	YMRP =	.0000 IN.YO		
BREF =	936.6800 IN.	ZMRP =	375.0000 IN.ZO		
SCALE =	.0300				

PARAMETRIC DATA

ALPHAC =	8.000	BETAC =	.000
ELV-IB =	.000	ELV-OB =	3.000
ELEVON =	5.000	MACH =	.600
PHI =	.000	DX =	.000
DY =	10.000	BETAO =	-5.000

RUN NO. 0/ 0 RN/L = 3.26 GRADIENT INTERVAL = .00/ 12.00

ALPHAO	DZ	DCN	DCA	DCLM	DCY	DCBL	DCYN	DCL	DCD	DCSL	DCLN
14.000	.000	-.21869	.01008	.06444	.00472	-.00739	-.00251	-.21463	-.04312	-.00778	-.00065
14.000	3.000	-.19882	.00853	.05320	.00333	-.00468	-.00284	-.19498	-.03983	-.00523	-.00162
14.000	7.500	-.17621	.00803	.04557	.00083	-.00261	-.00223	-.17291	-.03483	-.00307	-.00153
14.000	15.000	-.14767	.00787	.03958	-.00192	-.00064	-.00109	-.14518	-.02809	-.00089	-.00090
14.000	30.000	-.10217	.00760	.03057	-.00262	.00132	.00047	-.10098	-.01735	.00139	.00014
14.000	45.000	-.07115	.00789	.02339	-.00142	.00202	.00116	-.07095	-.00955	.00224	.00093
14.000	60.000	-.05092	.00771	.01634	-.00040	.00242	.00181	-.05127	-.00464	.00279	.00117
	GRADIENT	.00561	-.00026	-.00245	-.00052	.00062	.00004	.00551	.00111	.00052	-.00011

CA20 (747/1 01 S1) - (01 S1) D/S (114 - 007 (VGN114) (05 SEP 75)

REFERENCE DATA

SREF =	2690.0000 SQ.FT.	XMRP =	1109.0000 IN.XO		
LREF =	474.8100 IN.	YMRP =	.0000 IN.YO		
BREF =	936.6800 IN.	ZMRP =	375.0000 IN.ZO		
SCALE =	.0300				

PARAMETRIC DATA

ALPHAC =	8.000	BETAC =	.000
ELV-IB =	.000	ELV-OB =	3.000
ELEVON =	5.000	MACH =	.600
PHI =	.000	DX =	10.000
DY =	10.000	BETAO =	-5.000

RN/L = 3.24 GRADIENT INTERVAL = .00/ 12.00

ALPHAO = 10.000

DZ	DCN	DCA	DCLM	DCY	DCBL	DCYN	DCL	DCD	DCSL	DCLN
.000	-.32562	.01320	.02028	.00324	-.01332	-.00339	-.32697	-.04355	-.01371	-.00103
3.000	-.30174	.01252	.01695	.00084	-.01213	-.00284	-.29932	-.04007	-.01244	-.00070
7.500	-.27569	.01199	.01753	-.00105	-.01083	-.00250	-.27355	-.03616	-.01109	-.00059
15.000	-.23455	.01091	.01728	-.00217	-.00981	-.00191	-.23889	-.02999	-.00901	-.00026
30.000	-.17534	.00972	.01743	-.00165	-.00607	-.00083	-.17436	-.02087	-.00509	.00040
45.000	-.13331	.00895	.01554	.00007	-.00441	-.00019	-.13384	-.01434	-.00423	.00083
60.000	-.08649	.00813	.01462	.00160	-.00248	.00054	-.08958	-.00701	-.00233	.00085
GRADIENT	.00659	-.00017	-.00033	-.00056	.00033	.00012	.00652	.00099	.00034	.00006

ORIGINAL PAGE IS
OF POOR QUALITY

CA20 (747/1 01 S1) - (01 S1) D/S (114 - 007 (VGN114) (05 SEP 75)

REFERENCE DATA

SREF = 2690.0000 SQ.FT. XMRP = 1109.0000 IN.XO
LREF = 474.8100 IN. YMRP = .0000 IN.YO
BREF = 936.6800 IN. ZMRP = 375.0000 IN.ZO
SCALE = .0300

PARAMETRIC DATA

ALPHAC =	8.000	BETAC =	.000
ELV-IB =	.000	ELV-OB =	3.000
ELEVON =	5.000	MACH =	.600
PHI =	.000	DX =	10.000
DY =	10.000	BETAO =	-5.000

RN/L = 3.22 GRADIENT INTERVAL = .00/ 12.00

ALPHAO = 14.000

DZ	DCN	DCA	DCLM	DCY	DCBL	DCYN	DCL	DCD	DCSL	DCLN
.000	-.27828	.00985	.04937	.00388	-.00768	-.00291	-.27239	-.05776	-.00816	-.00097
3.000	-.25419	.00849	.03779	.00242	-.00565	-.00289	-.24870	-.05326	-.00619	-.00144
7.500	-.22648	.00696	.03321	-.00071	-.00392	-.00198	-.22144	-.04803	-.00428	-.00097
15.000	-.19103	.00547	.02885	-.00222	-.00144	-.00122	-.18692	-.03994	-.00169	-.00084
30.000	-.13405	.00531	.02535	-.00318	.00126	.00046	-.13136	-.02728	.00131	.00015
45.000	-.09663	.00519	.02119	-.00170	.00214	.00150	-.09502	-.01834	.00244	.00093
60.000	-.06993	.00447	.01468	-.00181	.00333	.00227	-.06767	-.01226	.00378	.00140
GRADIENT	.00655	-.00038	-.00206	-.00052	.00049	.00013	.00674	.00129	.00051	.00001

CA20 (747/1 01 S1) - (01 S1) D/S (115 - 007) (VGN115) (11 MAR 75)

REFERENCE DATA

SREF = 2690.0000 SQ.FT. XMRP = 1109.0000 IN.XO
LREF = 474.8100 IN. YMRP = .0000 IN.YO
BREF = 936.6800 IN. ZMRP = 375.0000 IN.ZO
SCALE = .0300

PARAMETRIC DATA

ALPHAC =	4.000	BETAC =	5.000
ELV-IB =	.000	ELV-OB =	3.000
ELEVON =	5.000	MACH =	.600
PHI =	.000	DX =	10.000
DY =	.000	BETAO =	-5.000

RN/L = 3.26 GRADIENT INTERVAL = .00/ 12.00

ALPHAO = 10.000

DZ	DCN	DCA	DCLM	DCY	DCBL	DCYN	DCL	DCD	DCSL	DCLN
.000	-.21399	.01371	.05672	.00900	-.00946	-.00145	-.21312	-.02356	-.00557	.00022
3.000	-.18750	.01039	.03740	.00603	-.00785	-.00040	-.18546	-.02233	-.00780	.00097
7.500	-.16845	.00325	.02263	.00349	-.00540	-.00003	-.16733	-.02112	-.00631	.00108
15.000	-.14009	.00643	.01921	.00171	-.00461	.00045	-.13908	-.01800	-.00446	.00124
30.000	-.10520	.00495	.01204	.00102	-.00255	.00112	-.10446	-.01339	-.00232	.00154
45.000	-.08465	.00451	.00824	.00094	-.00203	.00112	-.08414	-.01025	-.00180	.00146
60.000	-.06183	.00408	.00427	.00080	-.00136	.00120	-.06160	-.00672	-.00113	.00141
GRADIENT	.00593	-.00071	-.00357	-.00072	.00040	.00018	.00595	.00033	.00043	.00011

CA20 (747/1 01 S1) - (01 S1) D/S (115 - 007) (VGN115) (11 MAR 75)

REFERENCE DATA

SREF =	2690.0000 SQ.FT.	XMRP =	1109.0000 IN.XO
LREF =	474.8100 IN.	YMRP =	.0000 IN.YO
BREF =	936.6800 IN.	ZMRP =	375.0000 IN.ZO
SCALE =	.0300		

PARAMETRIC DATA

ALPHAC =	4.000	BETAC =	5.000
ELV-IB =	.000	ELV-OB =	3.000
ELEVON =	5.000	MACH =	.600
PHI =	.000	DX =	10.000
DY =	.000	BETAO =	-5.000

RN/L = 3.27 GRADIENT INTERVAL = .00/ 12.00

ALPHAO = 14.000

DZ	DCN	DCA	DCLM	DCY	DCBL	DCYN	DCL	DCD	DCSL	DCLN
.000	-.20069	.01754	.09473	.00188	-.00283	.00154	-.19897	-.03153	-.00237	.00218
3.000	-.16722	.01017	.06388	.00531	-.00173	-.00023	-.16481	-.03061	-.00174	.00019
7.500	-.14403	.00549	.04526	.00369	-.00043	.00029	-.14188	-.02551	-.00034	.00028
15.000	-.11030	.00410	.03072	.00177	.00099	.00097	-.11578	-.02464	.00118	.00071
30.000	-.08579	.00448	.01755	.00124	.00151	.00146	-.08433	-.01641	.00182	.00105
45.000	-.06702	.00499	.01126	.00059	.00148	.00178	-.05524	-.01137	.00187	.00137
60.000	-.05431	.00483	.00716	.00040	.00169	.00235	-.05387	-.00845	.00240	.00183
GRADIENT	.00737	-.00155	-.00540	.00019	.00032	-.00014	.00753	.00027	.00027	-.00022

CA30 (747/1 01 S1) - (01 S1) D/S (116 - 007) (VGN116) (11 MAR 75)

REFERENCE DATA

SREF =	2690.0000 SQ.FT.	XMRP =	1109.0000 IN.XO
LREF =	474.8100 IN.	YMRP =	.0000 IN.YO
BREF =	936.6800 IN.	ZMRP =	375.0000 IN.ZO
SCALE =	.0300		

PARAMETRIC DATA

ALPHAC =	8.000	BETAC =	5.000
ELV-IB =	.000	ELV-OB =	3.000
ELEVON =	5.000	MACH =	.600
PHI =	.000	DX =	10.000
DY =	.000	BETAO =	-5.000

RN/L = 3.26 GRADIENT INTERVAL = .00/ 12.00

ALPHAO = 10.000

DZ	DCN	DCA	DCLM	DCY	DCBL	DCYN	DCL	DCD	DCSL	DCLN
.000	-.34835	.01607	.02705	.01300	-.01441	.00019	-.34826	-.04467	-.01415	.00269
3.000	-.32394	.01467	.02259	.00826	-.01278	.00046	-.32157	-.04180	-.01250	.00267
7.500	-.28831	.01324	.01677	.00591	-.01081	.00080	-.28923	-.03702	-.01054	.00247
15.000	-.24027	.01182	.01709	.00353	-.00811	.00025	-.23967	-.03008	-.00764	.00165
30.000	-.17547	.00941	.01389	.00176	-.00512	.00122	-.17444	-.02120	-.00422	.00209
45.000	-.13523	.00833	.01091	.00195	-.00352	.00115	-.13550	-.01546	-.00366	.00174
60.000	-.09828	.00699	.00767	.00162	-.00147	.00147	-.09813	-.00585	-.00119	.00170
GRADIENT	.00800	-.00037	-.00108	-.00094	.00048	.00005	.00754	.00102	.00048	-.00003

CA20 (747/1 01 S1) - (01 S1) D/S (116 - 007) (VGN116) (11 MAR 75)

REFERENCE DATA

SREF =	2690.0000 SQ.FT.	XMRP =	1109.0000 IN.XO
LREF =	474.8100 IN.	YMRP =	.0000 IN.YO
BREF =	936.6800 IN.	ZMRP =	375.0000 IN.ZO
SCALE =	.0300		

PARAMETRIC DATA

ALPHAC =	8.000	BETAC =	5.000
ELV-IB =	.000	ELV-OB =	3.000
ELEVON =	5.000	MACH =	.600
PHI =	.000	DX =	10.000
DY =	.000	BETAO =	-5.000

RN/L = 3.26 GRADIENT INTERVAL = .00/ 12.00

ALPHAO = 14.000

DZ	DCN	DCA	DCLM	DCY	DCBL	DCYN	DCL	DCD	DCSL	DCLN
.000	-.33289	.01585	.06058	.01750	-.00764	-.00161	-.32693	-.06515	-.00780	.00028
3.000	-.30151	.01298	.04763	.01222	-.00501	-.00059	-.29569	-.06035	-.00501	.00064
7.500	-.26648	.01085	.03910	.00841	-.00262	-.00049	-.26119	-.05394	-.00266	.00016
15.000	-.22189	.00806	.03126	.00300	-.00051	.00084	-.21647	-.04566	-.00029	.00094
30.000	-.15919	.00638	.02327	.00112	.00156	.00172	-.15503	-.03208	.00193	.00130
45.000	-.11827	.00619	.01693	.00056	.00217	.00192	-.11625	-.02260	.00257	.00134
60.000	-.08979	.00581	.01189	.00055	.00239	.00242	-.08853	-.01608	.00291	.00177
GRADIENT	.00977	-.00065	-.00279	-.00118	.00065	.00014	.00867	.00149	.00067	-.00002

CA20 (747/1 01 S1) - (01 S1) D/S (117 - 007) (VGN117) (11 MAR 75)

REFERENCE DATA

SREF =	2690.0000 SQ.FT.	XMRP =	1109.0000 IN.XO
LREF =	474.8100 IN.	YMRP =	.0000 IN.YO
BREF =	936.6800 IN.	ZMRP =	375.0000 IN.ZO
SCALE =	.0300		

PARAMETRIC DATA

ALPHAC =	4.000	BETAC =	5.000
ELV-IB =	.000	ELV-OB =	3.000
ELEVON =	5.000	MACH =	.600
PHI =	.000	DX =	.000
DY =	10.000	BETAO =	-5.000

RUN NO. 0/ 0 RN/L = 3.29 GRADIENT INTERVAL = .00/ 12.00

ALPHAO	DZ	DCN	DCA	DCLM	DCY	DCBL	DCYN	DCL	DCD	DCSL	DCLN
10.000	.000	-.14616	.01192	.09317	-.00085	-.01176	-.00665	-.14691	-.01364	-.01274	-.00451
10.000	3.000	-.12677	.00772	.06649	-.00018	-.00853	-.00553	-.12619	-.01441	-.00947	-.00405
10.000	7.500	-.10497	.00685	.04308	-.00205	-.00663	-.00342	-.10456	-.01148	-.00712	-.00222
10.000	15.000	-.08658	.00663	.03133	-.00235	-.00469	-.00224	-.08642	-.00851	-.00501	-.00139
10.000	30.000	-.06283	.00647	.02088	-.00239	-.00267	-.00039	-.06300	-.00454	-.00270	.00008
10.000	45.000	-.04995	.00642	.01552	-.00111	-.00177	.00010	-.05031	-.00235	-.00173	.00041
10.000	60.000	-.03549	.00633	.01036	-.00008	-.00076	.00072	-.03605	.00007	-.00062	.00084
	GRADIENT	.00544	-.00054	-.00656	-.00018	.00067	.00044	.00547	.00032	.00073	.00031

CA20 (747/1 01 S1) - (01 S1) D/S (118 - 007) (VGN118) (11 MAR 75)

REFERENCE DATA

SREF =	2690.0000 SQ.FT.	XMRP =	1109.0000 IN.XO
LREF =	474.8100 IN.	YMRP =	.0000 IN.YO
BREF =	936.6800 IN.	ZMRP =	375.0000 IN.ZO
SCALE =	.0300		

PARAMETRIC DATA

ALPHAC =	4.000	BETAC =	5.000
ELV-IB =	.000	ELV-OB =	3.000
ELEVON =	5.000	MACH =	.600
PHI =	.000	DX =	10.000
DY =	10.000	BETAO =	-5.000

RN/L = 3.29 GRADIENT INTERVAL = .00/ 12.00

ALPHAO = 10.000

DZ	DCN	DCA	DCLM	DCY	DCBL	DCYN	DCL	DCD	DCSL	DCLN
.000	-.20193	.00763	.07683	-.00483	-.01410	-.00521	-.20019	-.02755	-.01479	-.00269
3.000	-.18037	.00379	.05575	-.00399	-.01106	-.00467	-.17829	-.02759	-.01170	-.00267
7.500	-.15759	.00337	.04006	-.00322	-.00890	-.00354	-.15577	-.02405	-.00938	-.00194
15.000	-.12875	.00371	.02300	-.00383	-.00549	-.00227	-.12744	-.01870	-.00678	-.00111
30.000	-.10300	.00335	.01742	-.00302	-.00419	-.00079	-.10202	-.01459	-.00426	-.00005
45.000	-.08546	.00268	.01273	-.00220	-.00300	-.00010	-.08565	-.01217	-.00289	.00043
60.000	-.06728	.00233	.00926	-.00155	-.00157	.00073	-.06666	-.00939	-.00142	.00059
GRADIENT	.00595	-.00053	-.00479	.00011	.00069	.00023	.00595	.00049	.00071	.00011

RN/L = 3.25 GRADIENT INTERVAL = .00/ 12.00

ALPHAO = 14.000

DZ	DCN	DCA	DCLM	DCY	DCBL	DCYN	DCL	DCD	DCSL	DCLN
.000	-.19601	.01321	.11240	-.00745	-.01133	-.00074	-.19339	-.03460	-.01117	.00202
3.000	-.17082	.00535	.08203	-.00655	-.00745	-.00068	-.16585	-.03608	-.00739	.00114
7.500	-.14243	-.00021	.05238	-.00463	-.00355	-.00092	-.13315	-.03485	-.00377	-.00001
15.000	-.11695	.00086	.03420	-.00394	-.00134	-.00014	-.11368	-.02746	-.00133	.00019
30.000	-.09496	.00220	.02042	-.00292	.00102	.00134	-.08296	-.01842	.00132	.00106
45.000	-.06737	.00332	.01462	-.00140	.00152	.00180	-.06617	-.01308	.00191	.00139
60.000	-.05654	.00400	.00918	.00059	.00153	.00212	-.05593	-.00979	.00280	.00169
GRADIENT	.00707	-.00175	-.00789	.00038	.00101	-.00003	.00729	.00002	.00097	-.00027

ORIGINAL PAGE IS
OF POOR QUALITY

CA20 (747/1 01 S1) - (01 S1) D/S (119 - 007) (VGNI19) (11 MAR 75)

REFERENCE DATA

SREF = 2690.0000 SQ.FT. XMRP = 1109.0000 IN.XO
LREF = 474.8100 IN. YMRP = .0000 IN.YO
BREF = 936.6800 IN. ZMRP = 375.0000 IN.ZO
SCALE = .0300

PARAMETRIC DATA

ALPHAC = 8.000 BETAC = 5.000
ELV-IB = .000 ELV-OB = 3.000
ELEVON = 5.000 MACH = .600
PHI = .000 DX = 10.000
DY = 10.000 BETAO = -5.000

RN/L = 3.23 GRADIENT INTERVAL = .00/ 12.00

ALPHAO = 10.000

DZ	DCN	DCA	DCLM	DCY	DCBL	DCYN	DCL	DCD	DCSL	DCLN
.000	-.34012	.01037	.05408	-.00106	-.01972	-.00848	-.33675	-.04885	-.02090	-.00493
3.000	-.31872	.01029	.04433	.00022	-.01738	-.00742	-.31567	-.04521	-.01840	-.00429
7.500	-.28248	.01030	.03043	-.00018	-.01385	-.00553	-.28039	-.03484	-.01460	-.00304
15.000	-.21956	.01051	.02442	-.00151	-.01089	-.00389	-.21805	-.02778	-.01140	-.00193
30.000	-.15784	.00962	.02025	-.00171	-.00695	-.00165	-.15711	-.01784	-.00713	-.00042
45.000	-.13370	.00849	.01699	-.00048	-.00511	-.00077	-.13315	-.01486	-.00517	.00013
60.000	-.09363	.00720	.01374	.00030	-.00235	.00071	-.09346	-.00917	-.00219	.00111
GRADIENT	.01052	.00008	-.00315	.00010	.00078	.00040	.01035	.00190	.00084	.00025

RN/L = 3.22 GRADIENT INTERVAL = .00/ 12.00

ALPHAO = 14.000

DZ	DCN	DCA	DCLM	DCY	DCBL	DCYN	DCL	DCD	DCSL	DCLN
.000	-.31545	.01032	.06643	.00351	-.01678	-.00770	-.30657	-.05630	-.01814	-.00341
3.000	-.28821	.00747	.05717	.00284	-.01260	-.00560	-.28146	-.05248	-.01382	-.00325
7.500	-.25087	.00698	.05086	.00142	-.00876	-.00480	-.24511	-.05392	-.00986	-.00253
15.000	-.20564	.00684	.03764	-.00078	-.00458	-.00315	-.20118	-.04311	-.00520	-.00195
30.000	-.14598	.00592	.02655	-.00325	-.00090	-.00024	-.14307	-.02957	-.00093	-.00001
45.000	-.11067	.00575	.02250	-.00220	.00053	.00069	-.10877	-.02120	.00067	.00053
60.000	-.08335	.00582	.01582	-.00091	.00170	.00155	-.08223	-.01471	.00202	.00109
GRADIENT	.00859	-.00042	-.00465	-.00028	.00105	.00039	.00843	.00167	.00111	.00012

CA20 (747/1 01 S1) - (01 S1) D/S (120 - 007) (VGN120) (11 MAR 75)

REFERENCE DATA

SREF =	2690.0000 SQ.FT.	XMRP =	1109.0000 IN.XO		
LREF =	474.8100 IN.	YMRP =	.0000 IN.YO		
BREF =	936.6800 IN.	ZMRP =	375.0000 IN.ZO		
SCALE =	.0300				

PARAMETRIC DATA

ALPHAC =	4.000	BETAC =	-5.000
ELV-IB =	.000	ELV-OB =	.000
ELEVON =	5.000	MACH =	.600
PHI =	.000	DX =	.000
DY =	10.000	BETAO =	-5.000

RN/L = 3.26 GRADIENT INTERVAL = .00/ 12.00

ALPHAO = 10.000

DZ	DCN	DCA	DCLM	DCY	DCBL	DCYN	DCL	DCD	DCSL	DCLN
.000	-.14095	.00570	.04385	-.00538	-.00109	.00057	-.13979	-.01885	-.00097	.00075
3.000	-.12362	.00378	.03027	-.00511	-.00108	.00056	-.12240	-.01774	-.00097	.00074
7.500	-.11572	.00244	.02875	-.00509	-.00122	.00063	-.11439	-.01769	-.00109	.00083
15.000	-.09744	.00157	.02261	-.00352	-.00113	.00057	-.09623	-.01539	-.00100	.00085
30.000	-.07277	.00052	.01810	-.00103	-.00050	.00139	-.07176	-.01213	-.00025	.00145
45.000	-.05515	.00038	.01357	.00142	-.00028	.00149	-.05438	-.00920	-.00002	.00151
60.000	-.03800	.00044	.00927	.00351	.00001	.00137	-.03553	-.00582	.00025	.00135
GRADIENT	.00324	-.00042	-.00188	.00005	-.00002	.00001	.00336	.00014	-.00002	.00001

RN/L = 3.24 GRADIENT INTERVAL = .00/ 12.00

ALPHAO = 14.000

DZ	DCN	DCA	DCLM	DCY	DCBL	DCYN	DCL	DCD	DCSL	DCLN
.000	-.10174	.01222	.06121	-.00753	.00152	.00320	-.10169	-.01276	.00225	.00274
3.000	-.08484	.00912	.04000	-.00638	.00164	.00157	-.08463	-.01170	.00197	.00113
7.500	-.08193	.00726	.03397	-.00419	.00101	.00061	-.08126	-.01278	.00112	.00034
15.000	-.07422	.00608	.02950	-.00274	.00050	.00074	-.07349	-.01205	.00067	.00060
30.000	-.05809	.00633	.02244	.00079	-.00014	.00120	-.05799	-.00791	.00015	.00120
45.000	-.04541	.00515	.01655	.00255	-.00016	.00172	-.04555	-.00502	.00028	.00171
60.000	-.03546	.00502	.01097	.00474	.00002	.00218	-.03683	-.00298	.00055	.00211
GRADIENT	.00249	-.00054	-.00345	.00045	-.00007	-.00034	.00257	-.00002	-.00015	-.00031

CA20 (747/1 01 S1) - (01 S1) D/S (121 - 007) (VGN121) (11 MAR 75)

REFERENCE DATA

SREF =	2690.0000 SQ.FT.	XMRP =	1109.0000 IN.XO
LREF =	474.8100 IN.	YMRP =	.0000 IN.YO
BREF =	936.6800 IN.	ZMRP =	375.0000 IN.ZO
SCALE =	.0300		

PARAMETRIC DATA

ALPHAC =	8.000	BETAC =	-5.000
ELV-IB =	.000	ELV-OB =	.000
ELEVON =	5.000	MACH =	.600
PHI =	.000	DX =	.000
DY =	10.000	BETAO =	-5.000

RN/L = 3.25 GRADIENT INTERVAL = .00/ 12.00

ALPHAO = 10.000

DZ	DCN	DCA	DCLM	DCY	DCBL	DCYN	DCL	DCD	DCSL	DCLN
.000	-.28427	.01294	.03339	-.00033	-.00796	-.00096	-.28220	-.03662	-.00801	.00043
3.000	-.26197	.01169	.03160	-.00209	-.00794	-.00127	-.26002	-.03398	-.00804	.00013
7.500	-.23518	.01024	.03037	-.00267	-.00748	-.00143	-.23339	-.03075	-.00761	-.00011
15.000	-.19534	.00863	.02745	-.00274	-.00632	-.00078	-.19387	-.02542	-.00635	.00033
30.000	-.14059	.00644	.02354	.00000	-.00414	.00042	-.13957	-.01807	-.00400	.00113
45.000	-.10434	.00520	.01828	.00221	-.00273	.00101	-.10366	-.01300	-.00252	.00147
60.000	-.06869	.00417	.01286	.00423	-.00151	.00147	-.06836	-.00782	-.00123	.00171
GRADIENT	.00650	-.00036	-.00039	-.00030	.00007	-.00006	.00646	.00078	.00006	-.00007

RN/L = 3.24 GRADIENT INTERVAL = .00/ 12.00

ALPHAO = 14.000

DZ	DCN	DCA	DCLM	DCY	DCBL	DCYN	DCL	DCD	DCSL	DCLN
.000	-.23348	.01056	.05412	-.00078	-.00177	-.00017	-.22910	-.04623	-.00176	.00026
3.000	-.21396	.00865	.04722	-.00212	-.00111	-.00101	-.20970	-.04336	-.00132	-.00071
7.500	-.19363	.00756	.04359	-.00358	-.00071	-.00065	-.18971	-.03950	-.00064	-.00047
15.000	-.16473	.00711	.03932	-.00343	-.00020	-.00009	-.16155	-.03295	-.00022	-.00003
30.000	-.11671	.00672	.03102	-.00020	.00070	.00078	-.11487	-.02172	.00087	.00058
45.000	-.08614	.00704	.02355	.00210	.00023	.00116	-.08528	-.01401	.00050	.00107
60.000	-.05634	.00698	.01614	.00452	.00020	.00194	-.05606	-.00927	.00067	.00183
GRADIENT	.00525	-.00039	-.00136	-.00037	.00014	-.00005	.00519	.00069	.00012	-.00009

CA20 (747/1 01 S1) - (01 S1) D/S (122 - 007) (VGN122) (11 MAR 75)

REFERENCE DATA

SREF =	2690.0000 SQ.FT.	XMRP =	1109.0000 IN.XO
LREF =	474.8100 IN.	YMRP =	.0000 IN.YO
BREF =	936.6800 IN.	ZMRP =	375.0000 IN.ZO
SCALE =	.0300		

PARAMETRIC DATA

ALPHAC =	4.000	BETAC =	.000
ELV-IB =	.000	ELV-OB =	.000
ELEVON =	5.000	MACH =	.600
PHI =	.000	DX =	.000
DY =	10.000	BETAO =	-5.000

RN/L = 3.33 GRADIENT INTERVAL = .00/ 12.00

ALPHAD = 10.000

DZ	DCN	DCA	DCLM	DCY	DCBL	DCYN	DCL	DCD	DCSL	DCLN
.000	-.13939	.00180	.04477	-.00063	-.00541	-.00178	-.13759	-.02243	-.00564	-.00081
3.000	-.12579	.00042	.03362	-.00093	-.00437	-.00173	-.12395	-.02143	-.00460	-.00095
7.500	-.11595	-.00000	.02932	-.00196	-.00378	-.00086	-.11419	-.02014	-.00387	-.00019
15.000	-.09937	-.00034	.02411	-.00153	-.00245	-.00036	-.09882	-.01741	-.00248	.00007
30.000	-.07412	-.00034	.01853	-.00033	-.00100	.00070	-.07293	-.01320	-.00086	.00066
45.000	-.05630	-.00021	.01393	.00155	-.00053	.00118	-.05540	-.00998	-.00031	.00125
60.000	-.03794	-.00012	.00895	.00331	-.00011	.00145	-.03735	-.00671	.00015	.00146
GRADIENT	.00305	-.00023	-.00190	-.00018	.00021	.00013	.00304	.00030	.00023	.00009

RN/L = 3.27 GRADIENT INTERVAL = .00/ 12.00

ALPHAD = 14.000

DZ	DCN	DCA	DCLM	DCY	DCBL	DCYN	DCL	DCD	DCSL	DCLN
.000	-.08399	.00324	.05082	-.00670	-.00097	.00279	-.08198	-.01710	-.00026	.00294
3.000	-.07649	.00339	.03929	-.00250	-.00038	-.00002	-.07698	-.01570	-.00037	.00008
7.500	-.07695	.00352	.03430	-.00119	-.00035	-.00043	-.07554	-.01510	-.00044	-.00034
15.000	-.07339	.00380	.02950	-.00007	-.00152	-.00059	-.07201	-.01213	-.00161	-.00018
30.000	-.05903	.00729	.02285	.00179	-.00189	.00041	-.05904	-.00721	-.00173	.00095
45.000	-.04220	.00726	.01601	.00313	-.00175	.00077	-.04862	-.00422	-.00151	.00117
60.000	-.04030	.00812	.01086	.00587	-.00202	.00125	-.04107	-.00187	-.00163	.00170
GRADIENT	.00085	.00005	-.00212	.00070	.00008	-.00040	.00082	.00026	-.00082	-.00041

DATE 04 DEC 75 TABULATED SOURCE DATA - CA20

CA20 (747/1 01 S1) - (01 S1) D/S (123 - 007) (VGN123) (11 MAR 75)

REFERENCE DATA

SREF =	2690.0000 SQ.FT.	XMRP =	1109.0000 IN.XO
LREF =	474.8100 IN.	YMRP =	.0000 IN.YO
BREF =	936.6800 IN.	ZMRP =	375.0000 IN.ZO
SCALE =	.0300		

PARAMETRIC DATA

ALPHAC =	8.000	BETAC =	.000
ELV-IB =	.000	ELV-OB =	.000
ELEVON =	5.000	MACH =	.600
PHI =	.000	DX =	.000
DY =	10.000	BETAO =	-5.000

RN/L = 3.28 GRADIENT INTERVAL = .00/ 12.00

ALPHAO = 10.000

DZ	DCN	DCA	DCLM	DCY	DCBL	DCYN	DCL	DCD	DCSL	DCLN
.000	-.29013	.00981	.03971	.00658	-.01261	-.00370	-.28742	-.04072	-.01306	-.00146
3.000	-.26474	.00908	.03434	.00384	-.01125	-.00295	-.26229	-.03703	-.01159	-.00095
7.500	-.23641	.00836	.03311	.00142	-.00979	-.00241	-.23427	-.03282	-.01005	-.00067
15.000	-.19727	.00749	.02921	.00026	-.00766	-.00151	-.19559	-.02689	-.00780	-.00016
30.000	-.14193	.00588	.02449	.00058	-.00467	-.00003	-.14080	-.01885	-.00460	.00078
45.000	-.10554	.00472	.01887	.00172	-.00274	.00075	-.10476	-.01368	-.00257	.00122
60.000	-.06988	.00367	.01301	.00270	-.00084	.00141	-.06946	-.00852	-.00058	.00153
GRADIENT	.00709	-.00019	-.00083	-.00068	.00037	.00017	.00702	.00104	.00040	.00010

RN/L = 3.26 GRADIENT INTERVAL = .00/ 12.00

ALPHAO = 14.000

DZ	DCN	DCA	DCLM	DCY	DCBL	DCYN	DCL	DCD	DCSL	DCLN
.000	-.23777	.00809	.05971	.00604	-.00723	-.00240	-.23267	-.04969	-.00760	-.00057
3.000	-.21756	.00653	.05168	.00431	-.00480	-.00242	-.21268	-.04630	-.00585	-.00119
7.500	-.19505	.00605	.04628	.00181	-.00298	-.00188	-.19072	-.04132	-.00334	-.00110
15.000	-.16271	.00542	.04078	-.00095	-.00094	-.00041	-.15919	-.03410	-.00101	-.00017
30.000	-.11525	.00581	.03148	-.00018	.00074	.00071	-.11323	-.02225	.00089	.00051
45.000	-.08671	.00735	.02352	.00226	-.00016	.00075	-.08592	-.01364	.00003	.00077
60.000	-.07012	.00904	.01599	.00557	-.00175	.00096	-.07023	-.00819	-.00147	.00135
GRADIENT	.00564	-.00026	-.00174	-.00056	.00055	.00007	.00554	.00111	.00056	-.00006

CA20 (747/1 01 S1) - (01 S1) D/S (124 - 007) (VGN124) (11 MAR 75)

REFERENCE DATA

SREF =	2690.0000 SQ.FT.	XMRP =	1109.0000 IN.XO		
LREF =	474.8100 IN.	YMRP =	.0000 IN.YO		
BREF =	936.6300 IN.	ZMRP =	375.0000 IN.ZO		
SCALE =	.0300				

PARAMETRIC DATA

ALPHAC =	4.000	BETAC =	5.000
ELV-IB =	.000	ELV-OB =	.000
ELEVON =	5.000	MACH =	.600
PHI =	.000	DX =	.000
DY =	10.000	BETAO =	-5.000

RN/L = 3.25 GRADIENT INTERVAL = .00/ 12.00

ALPHAO = 10.000

DZ	DCN	DCA	DCLM	DCY	DCBL	DCYN	DCL	DCD	DCSL	DCLN
.000	-.15775	.00316	.07741	.00131	-.01045	-.00549	-.15591	-.02429	-.01142	-.00457
3.000	-.13331	.00082	.05711	.00077	-.00811	-.00497	-.13535	-.02321	-.00885	-.00348
7.500	-.11693	.00040	.03997	-.00101	-.00643	-.00280	-.11414	-.01971	-.00682	-.00184
15.000	-.09511	.00003	.02890	-.00114	-.00418	-.00160	-.09367	-.01649	-.00439	-.00085
30.000	-.06080	-.00027	.01959	-.00077	-.00211	.00024	-.06751	-.01218	-.00204	.00060
45.000	-.05191	-.00024	.01444	.00055	-.00113	.00087	-.05108	-.00925	-.00095	.00106
60.000	-.03977	-.00018	.00977	.00208	-.00025	.00135	-.03981	-.00632	-.00001	.00139
GRADIENT	.00154	-.00035	-.00505	-.00032	.00052	.00049	.00552	.00062	.00060	.00033

RN/L = 3.23 GRADIENT INTERVAL = .00/ 12.00

ALPHAO = 14.000

DZ	DCN	DCA	DCLM	DCY	DCBL	DCYN	DCL	DCD	DCSL	DCLN
.000	-.12348	.01113	.09898	-.00753	-.00716	-.00045	-.12259	-.01907	-.00705	.00130
3.000	-.10770	.00571	.07289	-.00365	-.00398	-.00145	-.10589	-.02052	-.00421	-.00044
7.500	-.09167	.00260	.04928	-.00170	-.00164	-.00159	-.08965	-.01937	-.00198	-.00114
15.000	-.07289	.00465	.03515	-.00159	-.00107	-.00055	-.07747	-.01453	-.00117	-.00028
30.000	-.06083	.00551	.02368	.00009	-.00036	.00065	-.06039	-.00937	-.00019	.00072
45.000	-.04839	.00580	.01654	.00098	-.00016	.00135	-.04865	-.00620	.00017	.00135
60.000	-.04163	.00577	.01129	.00298	.00002	.00200	-.04179	-.00447	.00050	.00154
GRADIENT	.00419	-.00108	-.00652	.00075	.00072	-.00014	.00432	-.00002	.00065	-.00031

ORIGINAL PAGE IS
OF POOR QUALITY

CA20 (747/1 01 S1) - (01 S1) D/S (125 - 007) (VGN125) (11 MAR 75)

REFERENCE DATA

SREF =	2690.0000 SQ.FT.	XMRP =	1109.0000 IN.XO		
LREF =	474.8100 IN.	YMRP =	.0000 IN.YO		
BREF =	936.6900 IN.	ZMRP =	375.0000 IN.ZO		
SCALE =	.0300				

PARAMETRIC DATA

ALPHAC =	8.000	BETAC =	5.000
ELV-IB =	.000	ELV-OB =	.000
ELEVON =	5.000	MACH =	.600
PHI =	.000	DX =	.000
DY =	10.000	BETAO =	-5.000

RN/L = 3.23 GRADIENT INTERVAL = .00/ 12.00

ALPHAO = 10.000

DZ	DCN	DCA	DCLM	DCY	DCBL	DCYN	DCL	DCD	DCSL	DCLN
.000	-.29366	.00880	.06351	.00262	-.01686	-.00739	-.29073	-.04232	-.01728	-.00435
3.000	-.26872	.00850	.05118	.00194	-.01444	-.00577	-.26613	-.03820	-.01522	-.00317
7.500	-.23642	.00834	.04171	.00098	-.01194	-.00439	-.23428	-.03284	-.01252	-.00225
15.000	-.19540	.00733	.03395	.00060	-.00888	-.00280	-.19370	-.02671	-.00923	-.00122
30.000	-.13567	.00593	.02554	.00001	-.00527	-.00061	-.13563	-.01769	-.00529	.00031
45.000	-.10069	.00471	.01941	.00095	-.00322	.00039	-.09938	-.01274	-.00311	.00094
60.000	-.06474	.00363	.01327	.00208	-.00125	.00120	-.06438	-.00767	-.00102	.00140
GRADIENT	.00760	-.00006	-.00284	-.00022	.00065	.00039	.00749	.00126	.00071	.00027

RN/L = 3.23 GRADIENT INTERVAL = .00/ 12.00

ALPHAO = 14.000

DZ	DCN	DCA	DCLM	DCY	DCBL	DCYN	DCL	DCD	DCSL	DCLN
.000	-.26939	.01114	.09742	.00609	-.01397	-.00691	-.26408	-.05436	-.01523	-.00333
3.000	-.24039	.00812	.07335	.00514	-.00957	-.00578	-.23620	-.05027	-.01078	-.00327
7.500	-.21218	.00784	.05923	.00305	-.00514	-.00366	-.20758	-.04450	-.00864	-.00207
15.000	-.17442	.00653	.04591	.00053	-.00273	-.00183	-.17082	-.03596	-.00310	-.00112
30.000	-.12234	.00613	.03324	-.00080	-.00006	.00039	-.12019	-.02365	.00004	.00039
45.000	-.09089	.00677	.02384	.00076	.00053	.00094	-.08832	-.01641	.00074	.00079
60.000	-.06990	.00694	.01597	.00247	.00043	.00162	-.06941	-.01015	.00081	.00147
GRADIENT	.00752	-.00052	-.00494	-.00043	.00102	.00044	.00742	.00131	.00110	.00018

DATE 04 DEC 75 TABULATED SOURCE DATA - CA20

CA20 (747/1 01 S1) - (01 S1) D/S (126 - 018) (VGN126) (11 MAR 75)

REFERENCE DATA

SREF = 2690.0000 SQ.FT. XMRP = 1109.0000 IN.XO
LREF = 474.8100 IN. YMRP = .0000 IN.YO
BREF = 935.6900 IN. ZMRP = 375.0000 IN.ZO
SCALE = .0300

PARAMETRIC DATA

ALPHAC = 4.000 BETAC = -5.000
ELV-IB = .000 ELV-OB = 3.000
ELEVON = 5.000 MACH = .600
PHI = .000 DX = .000
DY = .000 BETAO = .000

RUN NO. 0/ 0 RN/L = 3.28 GRADIENT INTERVAL = .00/ 12.00

ALPHAO	DZ	DCN	DCA	DCLM	DCY	DCBL	DCYN	DCL	DCD	DCSL	DCLN
10.000	.000	-.10663	.00808	.04425	-.00648	.00582	.00031	-.10642	-.01056	.00579	-.00071
10.000	3.000	-.09306	.00642	.03376	-.00447	.00369	.00058	-.09276	-.00893	.00373	-.00007
10.000	7.500	-.08256	.00559	.02863	-.00251	.00265	.00080	-.08245	-.00784	.00275	.00033
10.000	15.000	-.06710	.00533	.02246	.00002	.00144	.00093	-.06718	-.00542	.00158	.00057
10.000	30.000	-.04196	.00650	.01535	.00309	.00041	.00068	-.04245	-.00028	.00053	.00060
10.000	45.000	-.02699	.00672	.01048	.00401	-.00029	.00024	-.02775	.00193	-.00025	.00029
10.000	60.000	-.01333	.00699	.00609	.00460	-.00091	-.00008	-.01435	.00457	-.00091	.00008
	GRADIENT	.00314	-.00018	-.00201	.00052	-.00041	.00006	.00312	.00037	-.00039	.00013

CA20 (747/1 01 S1) - (01 S1) D/S (127 - 018) (VGN127) (11 MAR 75)

REFERENCE DATA

SREF = 2690.0000 SQ.FT. XMRP = 1109.0000 IN.XO
LREF = 474.8100 IN. YMRP = .0000 IN.YO
BREF = 935.6900 IN. ZMRP = 375.0000 IN.ZO
SCALE = .0300

PARAMETRIC DATA

ALPHAC = 4.000 BETAC = -5.000
ELV-IB = .000 ELV-OB = 3.000
ELEVON = 5.000 MACH = .600
PHI = .000 DX = 10.000
DY = .000 BETAO = .000

RUN NO. 0/ 0 RN/L = 3.34 GRADIENT INTERVAL = .00/ 12.00

ALPHAO	DZ	DCN	DCA	DCLM	DCY	DCBL	DCYN	DCL	DCD	DCSL	DCLN
10.000	.000	-.14170	.00964	.03491	-.00567	.00627	-.00009	-.14122	-.01511	.00516	-.00118
10.000	3.000	-.12545	.00801	.02581	-.00396	.00427	.00023	-.12493	-.01389	.00424	-.00051
10.000	7.500	-.11157	.00773	.02126	-.00232	.00296	.00048	-.11122	-.01176	.00300	-.00004
10.000	15.000	-.09158	.00685	.01647	.00002	.00160	.00057	-.09139	-.00915	.00169	.00068
10.000	30.000	-.06019	.00628	.01151	.00269	.00049	.00051	-.06037	-.00427	.00057	.00042
10.000	45.000	-.04037	.00639	.00809	.00395	-.00023	.00014	-.04087	-.00072	-.00020	.00017
10.000	60.000	-.02295	.00646	.00512	.00520	-.00100	-.00008	-.02354	.00240	-.00100	.00010
	GRADIENT	.00394	-.00024	-.00175	.00044	-.00043	.00007	.00392	.00045	-.00041	.00015

ORIGINAL PAGE IS
OF POOR QUALITY

CA20 (747/1 01 S1) - (01 S1) D/S (129 - 018) (VGN128) (11 MAR 75)

REFERENCE DATA

SREF =	2690.0000 SQ.FT.	XMRP =	1109.0000 IN.XO
LREF =	474.8100 IN.	YMRP =	.0000 IN.YO
BREF =	936.6800 IN.	ZMRP =	375.0000 IN.ZO
SCALE =	.0300		

PARAMETRIC DATA

ALPHAC =	4.000	BETAC =	-5.000
ELV-IB =	.000	ELV-OB =	3.000
ELEVON =	5.000	MACH =	.600
PHI =	.000	DX =	20.000
DY =	.000	BETAO =	.000

RUN NO. 0/ 0 RN/L = 3.32 GRADIENT INTERVAL = .00/ 12.00

ALPHAO	DZ	DCN	DCA	DCLM	DCY	DCBL	DCYN	DCL	DCD	DCSL	DCLN
10.000	.000	-.16413	.01203	.02760	-.00595	.00727	.00026	-.16372	-.01665	.00720	-.00101
10.000	3.000	-.14469	.01005	.01808	-.00405	.00517	.00049	-.14424	-.01523	.00517	-.00042
10.000	7.500	-.12742	.00906	.01409	-.00162	.00370	.00061	-.12706	-.01320	.00375	-.00004
10.000	15.000	-.10321	.00744	.01002	.00042	.00219	.00071	-.10293	-.01060	.00228	.00032
10.000	30.000	-.06933	.00605	.00710	.00295	.00099	.00062	-.06834	-.00591	.00103	.00044
10.000	45.000	-.04694	.00557	.00516	.00414	.00015	.00035	-.04719	-.00267	.00021	.00032
10.000	60.000	-.02744	.00467	.00431	.00593	-.00079	.00028	-.02783	-.00017	-.00072	.00041
	GRADIENT	.00481	-.00038	-.00173	.00057	-.00046	.00005	.00480	.00046	-.00045	.00013

CA20 (747/1 01 S1) - (01 S1) D/S (129 - 018) (VGN129) (11 MAR 75)

REFERENCE DATA

SREF =	2690.0000 SQ.FT.	XMRP =	1109.0000 IN.XO
LREF =	474.8100 IN.	YMRP =	.0000 IN.YO
BREF =	936.6800 IN.	ZMRP =	375.0000 IN.ZO
SCALE =	.0300		

PARAMETRIC DATA

ALPHAC =	4.000	BETAC =	.000
ELV-IB =	.000	ELV-OB =	3.000
ELEVON =	5.000	MACH =	.600
PHI =	.000	DX =	.000
DY =	.000	BETAO =	.000

RN/L = 3.31 GRADIENT INTERVAL = .00/ 12.00

ALPHAO = 10.000

DZ	DCN	DCA	DCLM	DCY	DCBL	DCYN	DCL	DCD	DCSL	DCLN
.000	-.15259	.00211	.04127	.00082	-.00205	-.00014	-.15083	-.02442	-.00205	.00022
3.000	-.14244	.00147	.03178	.00095	-.00161	-.00006	-.14053	-.02329	-.00160	.00022
7.500	-.12943	.00160	.02518	.00123	-.00130	-.00000	-.12774	-.02060	-.00128	.00022
15.000	-.11211	.00185	.01958	.00132	-.00099	.00006	-.11073	-.01784	-.00097	.00023
30.000	-.08203	.00174	.01266	.00294	-.00069	.00024	-.08109	-.01253	-.00054	.00035
45.000	-.06335	.00170	.00836	.00351	-.00101	-.00003	-.06269	-.00933	-.00100	.00014
60.000	-.04652	.00191	.00453	.00361	-.00146	-.00034	-.04625	-.00821	-.00149	-.00009
GRADIENT	.00307	-.00006	-.00209	.00005	.00010	.00002	.00304	.00047	.00010	.00000

DATE 04 DEC 75 TABULATED SOURCE DATA - CA20

CA20 (747/1 01 S1) - (01 S1) D/S (129 - 018) (VGN129) (11 MAR 75)

REFERENCE DATA

SREF =	2690.0000 SQ.FT.	XMRP =	1109.0000 IN.XO
LREF =	474.8100 IN.	YMRP =	.0000 IN.YO
BREF =	936.6800 IN.	ZMRP =	375.0000 IN.ZO
SCALE =	.0300		

PARAMETRIC DATA

ALPHAC =	4.000	BETAC =	.000
ELV-IB =	.000	ELV-OB =	3.000
ELEVON =	5.000	MACH =	.600
PHI =	.000	DX =	.000
DY =	.000	BETAO =	.000

RN/L = 3.29 GRADIENT INTERVAL = .00/ 12.00

ALPHAD = 14.000

DZ	DCN	DCA	DCLM	DCY	DCBL	DCYN	DCL	DCD	DCSL	DCLN
.000	-.06781	.00371	.03954	-.00093	.00041	.00069	-.08610	-.01764	.00056	.00059
3.000	-.09113	.00314	.03578	-.00034	.00045	.00065	-.08919	-.01900	.00059	.00053
7.500	-.09099	.00339	.03108	-.00000	.00059	.00062	-.08910	-.01872	.00072	.00046
15.000	-.08284	.00483	.02510	.00039	.00083	.00061	-.09155	-.01535	.00095	.00039
30.000	-.06459	.00653	.01713	.00235	.00072	.00039	-.06428	-.00820	.00079	.00021
45.000	-.05143	.00728	.01200	.00265	.00079	.00045	-.05165	-.00537	.00083	.00024
60.000	-.04233	.00691	.00795	.00335	.00069	.00069	-.04272	-.00363	.00102	.00046
GRADIENT	-.00039	-.00003	-.00112	.00012	.00002	-.00001	-.00037	-.00013	.00002	-.00001

CA20 (747/1 01 S1) - (01 S1) D/S (130 - 018) (VGN130) (11 MAR 75)

REFERENCE DATA

SREF =	2690.0000 SQ.FT.	XMRP =	1109.0000 IN.XO
LREF =	474.8100 IN.	YMRP =	.0000 IN.YO
BREF =	936.6800 IN.	ZMRP =	375.0000 IN.ZO
SCALE =	.0300		

PARAMETRIC DATA

ALPHAC =	4.000	BETAC =	.000
ELV-IB =	.000	ELV-OB =	3.000
ELEVON =	5.000	MACH =	.600
PHI =	.000	DX =	10.000
DY =	.000	BETAO =	.000

RN/L = 3.30 GRADIENT INTERVAL = .00/ 12.00

ALPHAD = 10.000

DZ	DCN	DCA	DCLM	DCY	DCBL	DCYN	DCL	DCD	DCSL	DCLN
.000	-.16293	.00381	.02984	.00084	-.00181	-.00032	-.16112	-.02454	-.00184	.00000
3.000	-.15208	.00316	.02309	.00125	-.00162	-.00029	-.15032	-.02330	-.00165	.00000
7.500	-.13848	.00311	.01876	.00162	-.00154	-.00025	-.13691	-.02098	-.00155	.00002
15.000	-.11758	.00288	.01426	.00187	-.00130	-.00005	-.11629	-.01759	-.00123	.00017
30.000	-.08589	.00216	.00946	.00286	-.00085	.00013	-.00437	-.01269	-.00082	.00028
45.000	-.06465	.00199	.00638	.00322	-.00111	-.00010	-.06401	-.00927	-.00111	.00010
60.000	-.04653	.00242	.00332	.00384	-.00147	-.00026	-.04634	-.00571	-.00150	-.00000
GRADIENT	.00324	-.00009	-.00144	.00010	.00003	.00001	.00321	.00049	.00004	.00000

CA20 (747/1 01 S1) - (01 S1) D/S (130 - 018) (VGN130) (11 MAR 75)

REFERENCE DATA

SREF = 2690.0000 SQ.FT. XMRP = 1109.0000 IN.XO
LREF = 474.8100 IN. YMRP = .0000 IN.YO
BREF = 936.6800 IN. ZMRP = 375.0000 IN.ZO
SCALE = .0300

PARAMETRIC DATA

ALPHAC =	4.000	BETAC =	.000
ELV-IB =	.000	ELV-OB =	3.000
ELEVON =	5.000	MACH =	.600
PHI =	.000	DX =	10.000
DY =	.000	BETAO =	.000

RN/L = 3.31 GRADIENT INTERVAL = .00/ 12.00

ALPHAO = 14.000

DZ	DCN	DCA	DCLM	DCY	DCBL	DCYN	DCL	DCD	DCSL	DCLN
.000	-.12034	-.00409	.03319	-.00182	.00024	.00156	-.11577	-.03309	.00061	.00145
3.000	-.11864	-.00465	.03027	-.00205	.00103	.00169	-.11399	-.03321	.00141	.00138
7.500	-.11196	-.00369	.02628	-.00234	.00197	.00179	-.10774	-.03067	.00225	.00126
15.000	-.09674	-.00143	.02094	-.00197	.00270	.00169	-.09352	-.02479	.00303	.00099
30.000	-.07258	.00172	.01460	.00082	.00220	.00124	-.07054	-.01589	.00244	.00057
45.000	-.05510	.00373	.01049	.00104	.00181	.00090	-.05533	-.00996	.00197	.00044
60.000	-.04547	.00423	.00725	.00209	.00157	.00095	-.04514	-.00690	.00176	.00055
GRADIENT	.00115	.00007	-.00092	-.00007	.00023	.00003	.00110	.00034	.00023	-.00003

CA20 (747/1 01 S1) - (01 S1) D/S (131 - 018) (VGN131) (11 MAR 75)

REFERENCE DATA

SREF = 2690.0000 SQ.FT. XMRP = 1109.0000 IN.XO
LREF = 474.8100 IN. YMRP = .0000 IN.YO
BREF = 936.6800 IN. ZMRP = 375.0000 IN.ZO
SCALE = .0300

PARAMETRIC DATA

ALPHAC =	4.000	BETAC =	.000
ELV-IB =	.000	ELV-OB =	3.000
ELEVON =	5.000	MACH =	.600
PHI =	.000	DX =	20.000
DY =	.000	BETAO =	.000

RN/L = 3.29 GRADIENT INTERVAL = .00/ 12.00

ALPHAO = 10.000

DZ	DCN	DCA	DCLM	DCY	DCBL	DCYN	DCL	DCD	DCSL	DCLN
.000	-.18018	.00755	.02183	-.00057	-.00118	-.00035	-.17875	-.02385	-.00127	-.00019
3.000	-.16711	.00626	.01593	-.00042	-.00094	-.00021	-.16555	-.02235	-.00057	-.00004
7.500	-.15133	.00543	.01193	-.00073	-.00099	-.00013	-.14937	-.02093	-.00039	.00003
15.000	-.12812	.00422	.00989	-.00013	-.00078	.00000	-.12691	-.01809	-.00076	.00014
30.000	-.09352	.00354	.00557	.00145	-.00059	.00013	-.09271	-.01275	-.00065	.00024
45.000	-.07089	.00293	.00425	.00146	-.00053	-.00013	-.07032	-.00943	-.00065	-.00002
60.000	-.05155	.00269	.00351	.00216	-.00076	-.00051	-.05124	-.00830	-.00054	-.00037
GRADIENT	.00392	-.00027	-.00128	-.00001	.00004	.00003	.00381	.00039	.00004	.00002

CA20 (747/1 01 S1) - (01 S1) D/S (131 - 018) (VGN131) (11 MAR 75)

REFERENCE DATA

SREF = 2690.0000 SQ.FT. XMRP = 1109.0000 IN.XO
LREF = 474.8100 IN. YMRP = .0000 IN.YO
BREF = 936.6800 IN. ZMRP = 375.0000 IN.ZO
SCALE = .0300

PARAMETRIC DATA

ALPHAC =	4.000	BETAC =	.000
ELV-IB =	.000	ELV-OB =	3.000
ELEVON =	5.000	MACH =	.600
PHI =	.000	DX =	20.000
DY =	.000	BETAO =	.000

RN/L = 3.30 GRADIENT INTERVAL = .00/ 12.00

ALPHAO = 14.000

DZ	DCN	DCA	DCLM	DCY	DCBL	DCYN	DCL	DCD	DCSL	DCLN
.000	-.14307	-.00462	.02659	-.00362	-.00037	.00109	-.13848	-.03929	-.00009	.00113
3.000	-.13914	-.00595	.02437	-.00335	-.00005	.00116	-.13357	-.03943	.00023	.00113
7.500	-.12755	-.00527	.02048	-.00342	.00072	.00[illegible]	-.12249	-.03597	.00104	.00122
15.000	-.10317	-.00306	.01614	-.00404	.00208	.00190	-.10422	-.02913	.00248	.00134
30.000	-.07682	-.00067	.01099	-.00277	.00324	.00179	-.07409	-.01916	.00359	.00096
45.000	-.06057	.00238	.00821	-.00012	.00153	.00059	-.05957	-.01147	.00163	.00021
60.000	-.04947	.00486	.00631	.00160	.00095	.00052	-.04918	-.00725	.00105	.00028
GRADIENT	.00221	-.00007	-.00082	.00002	.00015	.00005	.00216	.00047	.00015	.00001

CA20 (747/1 01 S1) - (01 S1) D/S (132 - 018) (VGN132) (11 MAR 75)

REFERENCE DATA

SREF = 2690.0000 SQ.FT. XMRP = 1109.0000 IN.XO
LREF = 474.8100 IN. YMRP = .0000 IN.YO
BREF = 936.6800 IN. ZMRP = 375.0000 IN.ZO
SCALE = .0300

PARAMETRIC DATA

ALPHAC =	8.000	BETAC =	.000
ELV-IB =	.000	ELV-OB =	3.000
ELEVON =	5.000	MACH =	.600
PHI =	.000	DX =	.000
DY =	.000	BETAO =	.000

RN/L = 3.29 GRADIENT INTERVAL = .00/ 12.00

ALPHAO = 10.000

DZ	DCN	DCA	DCLM	DCY	DCBL	DCYN	DCL	DCD	DCSL	DCLN
.000	-.30334	.01285	.03330	.00066	-.00230	.00004	-.30126	-.04007	-.00226	.00044
3.000	-.28128	.01183	.02950	.00118	-.00194	-.00006	-.27906	-.03719	-.00192	.00027
7.500	-.25311	.01095	.02591	.00163	-.00171	-.00013	-.25116	-.03317	-.00178	.00017
15.000	-.21269	.00991	.02104	.00175	-.00142	-.00004	-.21118	-.02717	-.00141	.00020
30.000	-.15390	.00763	.01527	.00300	-.00121	-.00004	-.15289	-.01921	-.00120	.00017
45.000	-.11630	.00649	.01044	.00345	-.00137	-.00027	-.11555	-.01330	-.00140	-.00003
60.000	-.08411	.00606	.00547	.00432	-.00128	-.00020	-.08389	-.00854	-.00129	.00003
GRADIENT	.00570	-.00025	-.00097	.00013	.00008	-.00002	.00554	.00022	.00007	-.00003

DATE 04 DEC 75 TABULATED SOURCE DATA - CA20

CA20 (747/1 01 S1) - (01 S1) D/S (132 - 018) (VGN132) (11 MAR 75)

REFERENCE DATA

SREF =	2690.0000 SQ.FT.	XMRP =	1109.0000 IN.XO
LREF =	474.8100 IN.	YMRP =	.0000 IN.YO
BREF =	936.6900 IN.	ZMRP =	375.0000 IN.ZO
SCALE =	.0300		

PARAMETRIC DATA

ALPHAC =	8.000	BETAC =	.000
ELV-IB =	.000	ELV-OB =	3.000
ELEVON =	5.000	MACH =	.600
PHI =	.000	DX =	.000
DY =	.000	BETAO =	.000

RN/L = 3.28 GRADIENT INTERVAL = .00/ 12.00

ALPHAO = 14.000

DZ	DCN	DCA	DCLM	DCY	DCBL	DCYN	DCL	DCD	DCSL	DCLN
.000	-.25454	.00276	.04940	-.00115	-.00141	.00089	-.24765	-.05990	-.00115	.00121
3.000	-.23661	.00194	.04201	-.00121	-.00098	.00103	-.23005	-.05536	-.00061	.00121
7.500	-.21392	.00196	.03592	-.00139	-.00057	.00126	-.20804	-.04985	-.00024	.00135
15.000	-.18317	.00139	.03046	-.00177	.00069	.00160	-.17806	-.04296	.00106	.00138
30.000	-.13035	.00201	.02142	-.00035	.00180	.00186	-.12697	-.02959	.00220	.00136
45.000	-.09890	.00274	.01533	-.00034	.00222	.00164	-.09692	-.02127	.00255	.00105
60.000	-.07557	.00317	.01020	.00113	.00253	.00154	-.07410	-.01521	.00292	.00127
GRADIENT	.00539	-.00010	-.00176	-.00003	.00011	.00005	.00525	.00121	.00012	.00002

CA20 (747/1 01 S1) - (01 S1) D/S (133 - 018) (VGN133) (11 MAR 75)

REFERENCE DATA

SREF =	2690.0000 SQ.FT.	XMRP =	1109.0000 IN.XO
LREF =	474.8100 IN.	YMRP =	.0000 IN.YO
BREF =	936.6900 IN.	ZMRP =	375.0000 IN.ZO
SCALE =	.0300		

PARAMETRIC DATA

ALPHAC =	8.000	BETAC =	.000
ELV-IB =	.000	ELV-OB =	3.000
ELEVON =	5.000	MACH =	.600
PHI =	.000	DX =	10.000
DY =	.000	BETAO =	.000

RN/L = 3.32 GRADIENT INTERVAL = .00/ 12.00

ALPHAO = 10.000

DZ	DCN	DCA	DCLM	DCY	DCBL	DCYN	DCL	DCD	DCSL	DCLN
.000	-.32525	.01503	.01875	.00028	-.00199	-.00028	-.32282	-.04169	-.00201	.00007
3.000	-.30399	.01389	.01582	.00055	-.00170	-.00025	-.30179	-.03911	-.00171	.00005
7.500	-.27594	.01270	.01371	.00093	-.00144	-.00021	-.27355	-.03541	-.00146	.00004
15.000	-.23308	.01092	.01137	.00128	-.00106	-.00015	-.23143	-.02972	-.00103	.00004
30.000	-.16737	.00935	.00867	.00244	-.00089	-.00006	-.16628	-.02064	-.00069	.00003
45.000	-.12520	.00698	.00637	.00329	-.00105	-.00025	-.12451	-.01485	-.00108	-.00006
60.000	-.08868	.00572	.00451	.00428	-.00125	-.00012	-.08933	-.00977	-.00126	.00010
GRADIENT	.00655	-.00031	-.00065	.00009	.00007	.00001	.00650	.00093	.00007	-.00000

CA20 (747/1 01 S1) - (01 S1) D/S (133 - 018) (VGN133) (11 MAR 75)

REFERENCE DATA

SREF = 2690.0000 SQ.FT. XMRP = 1109.0000 IN.XO
LREF = 474.8100 IN. YMRP = .0000 IN.YO
BREF = 936.6800 IN. ZMRP = 375.0000 IN.ZO
SCALE = .0300

PARAMETRIC DATA

ALPHAC =	8.000	BETAC =	.000
ELV-IB =	.000	ELV-OB =	3.000
ELEVON =	5.000	MACH =	.600
PHI =	.000	DX =	10.000
DY =	.000	BETAO =	.000

RN/L = 3.30 GRADIENT INTERVAL = .00/ 12.00

ALPHAO = 14.000

DZ	DCN	DCA	DCLM	DCY	DCBL	DCYN	DCL	DCD	DCSL	DCLN
.000	-.29198	.00376	.03342	-.00057	-.00138	.00010	-.28422	-.06598	-.00131	.00043
3.000	-.27262	.00232	.02803	-.00055	-.00080	.00024	-.26508	-.06370	-.00072	.00043
7.500	-.24717	.00151	.02445	-.00074	-.00044	.00043	-.24019	-.05933	-.00032	.00052
15.000	-.20924	-.00005	.02093	-.00120	-.00017	.00091	-.20204	-.05042	.00006	.00092
30.000	-.14641	-.00034	.01585	-.00080	.00071	.00165	-.14198	-.03575	.00109	.00143
45.000	-.10717	.00032	.01155	-.00149	.00194	.00170	-.10406	-.02582	.00230	.00118
60.000	-.08149	.00115	.00846	-.00030	.00230	.00215	-.07934	-.01859	.00275	.00153
GRADIENT	.00593	-.00029	-.00116	-.00002	.00012	.00004	.00594	.00116	.00013	.00001

CA20 (747/1 01 S1) - (01 S1) D/S (134 - 018) (VGN134) (11 MAR 75)

REFERENCE DATA

SREF = 2690.0000 SQ.FT. XMRP = 1109.0000 IN.XO
LREF = 474.8100 IN. YMRP = .0000 IN.YO
BREF = 936.6800 IN. ZMRP = 375.0000 IN.ZO
SCALE = .0300

PARAMETRIC DATA

ALPHAC =	8.000	BETAC =	.000
ELV-IB =	.000	ELV-OB =	3.000
ELEVON =	5.000	MACH =	.600
PHI =	.000	DX =	20.000
DY =	.000	BETAO =	.000

RN/L = 3.27 GRADIENT INTERVAL = .00/ 12.00

ALPHAO = 10.000

DZ	DCN	DCA	DCLM	DCY	DCBL	DCYN	DCL	DCD	DCSL	DCLN
.000	-.33056	.01638	.00735	-.00082	-.00123	-.00080	-.32839	-.04127	-.00135	-.00057
3.000	-.30808	.01471	.00329	-.00075	-.00080	-.00071	-.30595	-.03901	-.00091	-.00055
7.500	-.27399	.01315	.00248	-.00028	-.00065	-.00055	-.27802	-.03567	-.00074	-.00044
15.000	-.23921	.01141	.00313	.00055	-.00064	-.00025	-.23755	-.03030	-.00067	-.00013
30.000	-.17228	.00897	.00215	.00160	-.00024	-.00016	-.17120	-.02118	-.00026	-.00011
45.000	-.12829	.00710	.00222	.00303	-.00046	-.00004	-.12757	-.01528	-.00046	.00004
60.000	-.09113	.00520	.00358	.00434	-.00130	.00005	-.09065	-.01070	-.00127	.00027
GRADIENT	.00670	-.00042	-.00061	.00008	.00007	.00003	.00657	.00075	.00008	.00002

ORIGINAL PAGE IS
OF POOR QUALITY

CA20 (747/1 01 S1) - (01 S1) D/S (134 - 018) (VGN134) (11 MAR 75)

REFERENCE DATA

SREF =	2690.0000 SQ.FT.	XMRP =	1109.0000 IN.XO
LREF =	474.8100 IN.	YMRP =	.0000 IN.YO
BREF =	936.6800 IN.	ZMRP =	375.0000 IN.ZO
SCALE =	.0300		

PARAMETRIC DATA

ALPHAC =	8.000	BETAC =	.000
ELV-1B =	.000	ELV-0B =	3.000
ELEVON =	5.000	MACH =	.600
PHI =	.000	DX =	20.000
DY =	.000	BETAO =	.000

RN/L = 3.29 GRADIENT INTERVAL = .00/ 12.00

ALPHAO = 14.000

DZ	DCN	DCA	DCLM	DCY	DCBL	DCYN	DCL	DCD	DCSL	DCLN
.000	-.30476	.00467	.01836	-.00238	-.00089	-.00028	-.29684	-.06920	-.00093	-.00006
3.000	-.28400	.00318	.01350	-.00224	-.00035	-.00012	-.27634	-.06562	-.00037	-.00004
7.500	-.26046	.00175	.01213	-.00213	.00006	.00009	-.25314	-.06131	.00008	.00007
15.000	-.22108	.00014	.01093	-.00229	.00067	.00049	-.21455	-.05335	.00077	.00032
30.000	-.15779	-.00158	.01007	-.00217	.00013	.00136	-.15272	-.03971	.00045	.00128
45.000	-.11376	-.00133	.00763	-.00240	.00135	.00153	-.11006	-.02881	.00169	.00116
60.000	-.08749	-.00124	.00575	-.00183	.00228	.00246	-.08459	-.02237	.00281	.00184
GRADIENT	.00585	-.00039	-.00079	.00003	.00012	.00005	.00577	.00104	.00013	.00002

CA20 (747/1 01 S1) - (01 S1) D/S (135 - 018) (VGN135) (11 MAR 75)

REFERENCE DATA

SREF =	2690.0000 SQ.FT.	XMRP =	1109.0000 IN.XO
LREF =	474.8100 IN.	YMRP =	.0000 IN.YO
BREF =	936.6800 IN.	ZMRP =	375.0000 IN.ZO
SCALE =	.0300		

PARAMETRIC DATA

ALPHAC =	4.000	BETAC =	-5.000
ELV-1B =	.000	ELV-0B =	3.000
ELEVON =	5.000	MACH =	.600
PHI =	.000	DX =	.000
DY =	10.000	BETAO =	.000

RUN NO. 0/ 0 RN/L = 3.27 GRADIENT INTERVAL = .00/ 12.00

ALPHAO	DZ	DCN	DCA	DCLM	DCY	DCBL	DCYN	DCL	DCD	DCSL	DCLN
10.000	.000	-.07731	.00756	.03205	-.00374	-.00265	-.00189	-.07745	-.00598	-.00314	-.00137
10.000	3.000	-.07461	.00595	.02884	-.00389	-.00275	-.00152	-.07468	-.00611	-.00297	-.00102
10.000	7.500	-.06933	.00653	.02640	-.00309	-.00259	-.00101	-.06941	-.00561	-.00271	-.00054
10.000	15.000	-.05819	.00628	.02301	-.00133	-.00227	-.00043	-.05840	-.00392	-.00231	-.00003
10.000	30.000	-.03779	.00634	.01742	.00188	-.00187	.00047	-.03832	-.00032	-.00176	.00079
10.000	45.000	-.02245	.00649	.01259	.00372	-.00171	.00053	-.02323	.00249	-.00160	.00082
10.000	60.000	-.00622	.00670	.00796	.00553	-.00153	.00069	-.00729	.00552	-.00139	.00095
	GRADIENT	.00107	-.00013	-.00074	.00010	.00004	.00012	.00108	.00005	.00006	.00011

CA20 (747/1 01 S1) - (01 S1) D/S (136 - 018) (VGN136) (11 MAR 75)

REFERENCE DATA

SREF = 2690.0000 SQ.FT. XMRP = 1109.0000 IN.XO
LREF = 474.8100 IN. YMRP = .0000 IN.YO
BREF = 936.6800 IN. ZMRP = 375.0000 IN.ZO
SCALE = .0300

PARAMETRIC DATA

ALPHAC = 4.000 BETAC = -5.000
ELV-IB = .000 ELV-OB = 3.000
ELEVON = 5.000 MACH = .600
PHI = .000 DX = 10.000
DY = 10.000 BETAO = .000

RUN NO. 0/ 0 RN/L = 3.26 GRADIENT INTERVAL = .00/ 12.00

ALPHAO	DZ	DCN	DCA	DCLM	DCY	DCBL	DCYN	DCL	DCD	DCSL	DCLN
10.000	.000	-.11377	.00922	.02398	-.00323	-.00166	-.00168	-.11355	-.01068	-.00192	-.00137
10.000	3.000	-.10739	.00824	.02099	-.00340	-.00183	-.00144	-.10719	-.01053	-.00205	-.00110
10.000	7.500	-.09853	.00721	.01940	-.00229	-.00198	-.00116	-.09838	-.01003	-.00215	-.00080
10.000	15.000	-.09219	.00640	.01728	-.00135	-.00200	-.00054	-.09205	-.00797	-.00206	-.00019
10.000	30.000	-.05650	.00574	.01357	.00248	-.00165	.00026	-.05654	-.00416	-.00177	.00059
10.000	45.000	-.03871	.00606	.00991	.00403	-.00171	.00044	-.03918	-.00076	-.00161	.00073
10.000	60.000	-.02154	.00647	.00649	.00493	-.00156	.00048	-.02233	.00263	-.00146	.00075
	GRADIENT	.00201	-.00027	-.00059	.00005	-.00004	.00007	.00203	.00009	-.00003	.00007

CA20 (747/1 01 S1) - (01 S1) D/S (137 - 018) (VGN137) (11 MAR 75)

REFERENCE DATA

SREF = 2690.0000 SQ.FT. XMRP = 1109.0000 IN.XO
LREF = 474.8100 IN. YMRP = .0000 IN.YO
BREF = 936.6800 IN. ZMRP = 375.0000 IN.ZO
SCALE = .0300

PARAMETRIC DATA

ALPHAC = 4.000 BETAC = .000
ELV-IB = .000 ELV-OB = 3.000
ELEVON = 5.000 MACH = .600
PHI = .000 DX = .000
DY = 10.000 BETAO = .000

RUN NO. 0/ 0 RN/L = 3.35 GRADIENT INTERVAL = .00/ 12.00

ALPHAO	DZ	DCN	DCA	DCLM	DCY	DCBL	DCYN	DCL	DCD	DCSL	DCLN
10.000	.000	-.08034	.00454	.03761	.00155	-.00814	-.00279	-.07891	-.00948	-.00851	-.00133
10.000	3.000	-.07625	.00437	.02288	.00031	-.00556	-.00230	-.07595	-.00894	-.00585	-.00112
10.000	7.500	-.06908	.00475	.02924	.00004	-.00544	-.00179	-.06885	-.00732	-.00557	-.00082
10.000	15.000	-.05745	.00516	.02443	.00024	-.00408	-.00105	-.05747	-.00489	-.00421	-.00034
10.000	30.000	-.03657	.00590	.01783	.00169	-.00274	-.00008	-.03712	-.00066	-.00272	.00040
10.000	45.000	-.02216	.00633	.01259	.00340	-.00224	.00028	-.02293	.00239	-.00215	.00067
10.000	60.000	-.00622	.00688	.00764	.00500	-.00165	.00057	-.00732	.00570	-.00151	.00095
	GRADIENT	.00151	.00003	-.00109	-.00019	.00035	.00013	.00148	.00029	.00037	.00007

CA20 (747/1 01 S1) - (01 S1) D/S (138 - 018) (VGN138) (11 MAR 75)

REFERENCE DATA

SREF = 2690.0000 SQ.FT. XMRP = 1109.0000 IN.XO
LREF = 474.8100 IN. YMRP = .0000 IN.YO
BREF = 936.6900 IN. ZMRP = 375.0000 IN.ZO
SCALE = .0300

PARAMETRIC DATA

ALPHAC = 4.000 BETAC = .000
ELV-IB = .000 ELV-OB = 3.000
ELEVON = 5.000 MACH = .600
PHI = .000 DX = 10.000
DY = 10.000 BETAO = .000

RUN NO. 0/ 0 RN/L = 3.29 GRADIENT INTERVAL = .00/ 12.00

ALPHAO	DZ	DCN	DCA	DCLM	DCY	DCBL	DCYN	DCL	DCD	DCSL	DCLN
10.000	.000	-.11323	.00570	.02888	.00071	-.00764	-.00260	-.11250	-.01405	-.00793	-.00123
10.000	3.000	-.10647	.00513	.02481	-.00020	-.00624	-.00218	-.10574	-.01344	-.00653	-.00106
10.000	7.500	-.09740	.00486	.02186	-.00046	-.00518	-.00178	-.09677	-.01213	-.00541	-.00086
10.000	15.000	-.08135	.00483	.01658	-.00007	-.00399	-.00114	-.08095	-.00937	-.00413	-.00043
10.000	30.000	-.05567	.00510	.01387	.00205	-.00281	-.00021	-.05571	-.00464	-.00280	.00028
10.000	45.000	-.03773	.00556	.00980	.00353	-.00223	.00025	-.03813	-.00108	-.00216	.00063
10.000	60.000	-.01991	.00609	.00645	.00479	-.00170	.00042	-.02067	.00253	-.00161	.00070
	GRADIENT	.00210	-.00011	-.00091	-.00015	.00032	.00011	.00209	.00026	.00034	.00005

CA20 (747/1 01 S1) - (01 S1) D/S (139 - 018) (VGN139) (11 MAR 75)

REFERENCE DATA

SREF = 2690.0000 SQ.FT. XMRP = 1109.0000 IN.XO
LREF = 474.8100 IN. YMRP = .0000 IN.YO
BREF = 936.6900 IN. ZMRP = 375.0000 IN.ZO
SCALE = .0300

PARAMETRIC DATA

ALPHAC = 4.000 BETAC = 5.000
ELV-IB = .000 ELV-OB = 3.000
ELEVON = 5.000 MACH = .600
PHI = .000 DX = .000
DY = 10.000 BETAO = .000

RUN NO. 0/ 0 RN/L = 3.25 GRADIENT INTERVAL = .00/ 12.00

ALPHAO	DZ	DCN	DCA	DCLM	DCY	DCBL	DCYN	DCL	DCD	DCSL	DCLN
10.000	.000	-.08094	.00353	.04731	.00002	-.01469	-.00462	-.08032	-.01058	-.01527	-.00200
10.000	3.000	-.07827	.00385	.04013	-.00034	-.01116	-.00370	-.07578	-.00945	-.01164	-.00171
10.000	7.500	-.06744	.00475	.03427	-.00030	-.00865	-.00285	-.06724	-.00703	-.00901	-.00130
10.000	15.000	-.05509	.00485	.02730	-.00004	-.00601	-.00176	-.05509	-.00479	-.00622	-.00069
10.000	30.000	-.03377	.00575	.01917	.00125	-.00380	-.00044	-.03426	-.00020	-.00382	.00022
10.000	45.000	-.02007	.00611	.01310	.00244	-.00254	.00004	-.02083	.00253	-.00250	.00048
10.000	60.000	-.00501	.00662	.00731	.00355	-.00130	.00054	-.00608	.00555	-.00118	.00076
	GRADIENT	.00181	.00017	-.00170	-.00004	.00079	.00023	.00176	.00048	.00081	.00009

CA20 (747/1 01 S1) - (01 S1) D/S (140 - 018) (VGN140) (11 MAR 75)

REFERENCE DATA

SREF =	2690.0000 SQ.FT.	XMRP =	1109.0000 IN.XO		
LREF =	474.8100 IN.	YMRP =	.0000 IN.YO		
BREF =	935.6800 IN.	ZMRP =	375.0000 IN.ZO		
SCALE =	.0300				

PARAMETRIC DATA

ALPHAC =	4.000	BETAC =	5.000
ELV-IB =	.000	ELV-OB =	3.000
ELEVON =	5.000	MACH =	.600
PHI =	.000	DX =	10.000
DY =	10.000	BETAO =	.000

RUN NO. 0/ 0 RN/L = 3.26 GRADIENT INTERVAL = .00/ 12.00

ALPHAO	DZ	DCN	DCA	DCLM	DCY	DCBL	DCYN	DCL	DCD	DCSL	DCLN
10.000	.000	-.11748	.00315	.03846	-.00068	-.01455	-.00415	-.11624	-.01730	-.01505	-.00155
10.000	3.000	-.10902	.00323	.03208	-.00078	-.01132	-.00336	-.10792	-.01575	-.01173	-.00134
10.000	7.500	-.09718	.00389	.02655	-.00041	-.00873	-.00280	-.09636	-.01313	-.00905	-.00104
10.000	15.000	-.07949	.00446	.02121	-.00013	-.00615	-.00172	-.07905	-.00941	-.00635	-.00063
10.000	30.000	-.05338	.00516	.01518	.00155	-.00379	-.00045	-.05346	-.00419	-.00391	.00021
10.000	45.000	-.03525	.00550	.01057	.00270	-.00269	.00004	-.03567	-.00078	-.00264	.00051
10.000	60.000	-.01937	.00516	.00645	.00342	-.00168	.00026	-.02063	.00261	-.00161	.00035
	GRADIENT	.00270	.00009	-.00156	.00004	.00076	.00020	.00264	.00055	.00078	.00007

CA20 (747/1 01 S1) - (01 S1) D/S (141 - 010) (VGN141) (11 MAR 75)

REFERENCE DATA

SREF =	2690.0000 SQ.FT.	XMRP =	1109.0000 IN.XO		
LREF =	474.8100 IN.	YMRP =	.0000 IN.YO		
BREF =	935.6800 IN.	ZMRP =	375.0000 IN.ZO		
SCALE =	.0300				

PARAMETRIC DATA

ALPHAC =	4.000	BETAC =	.000
ELV-IB =	10.000	ELV-OB =	13.000
ELEVON =	5.000	MACH =	.600
PHI =	.000	DX =	.000
DY =	.000	BETAO =	.000

RN/L = 3.26 GRADIENT INTERVAL = -1.00/ 4.00

ALPHAO = 10.000

DZ	DCN	DCA	DCLM	DCY	DCBL	DCYN	DCL	DCD	DCSL	DCLN
.000	-.14473	.00732	.04961	-.00040	-.00059	-.00021	-.14391	-.01733	-.00062	-.00010
3.000	-.13093	.00621	.03855	-.00036	-.00036	-.00016	-.13002	-.01652	-.00038	-.00010
7.500	-.11803	.00552	.03372	-.00035	-.00024	-.00007	-.11721	-.01497	-.00025	-.00003
15.000	-.09586	.00355	.02441	.00015	.00001	.00020	-.09581	-.01329	.00004	.00020
30.000	-.05940	.00289	.01743	.00050	-.00005	.00069	-.06887	-.00912	.00007	.00059
45.000	-.05135	.00227	.01145	.00109	-.00015	.00037	-.05097	-.00669	-.00009	.00039
60.000	-.03176	.00181	.00586	.00155	-.00027	.00022	-.03159	-.00373	-.00023	.00026
GRADIENT	.00460	-.00057	-.00259	.00001	.00008	.00002	.00463	.00024	.00008	.00000

CA20 (747/1 01 S1) - (01 S1) D/S (141 - 010) (VGN141) (11 MAR 75)

REFERENCE DATA

SREF =	2690.0000 SQ.FT.	XMRP =	1109.0000 IN.XO
LREF =	474.8100 IN.	YMRP =	.0000 IN.YO
BREF =	936.6900 IN.	ZMRP =	375.0000 IN.ZO
SCALE =	.0300		

PARAMETRIC DATA

ALPHAC =	4.000	BETAC =	.000
ELV-IB =	10.000	ELV-OB =	13.000
ELEVON =	5.000	MACH =	.600
PHI =	.000	DX =	.000
DY =	.000	BETAO =	.000

RN/L = 3.20 GRADIENT INTERVAL = -1.00/ 4.00

ALPHAO = 14.000

DZ	DCN	DCA	DCLM	DCY	DCBL	DCYN	DCL	DCD	DCSL	DCLN
.000	-.10893	.01370	.06834	-.00363	.00108	.00106	-.10901	-.01306	.00128	.00077
3.000	-.09804	.00938	.05107	-.00285	.00152	.00075	-.09837	-.01485	.00165	.00036
7.500	-.09109	.00856	.04179	-.00303	.00163	.00079	-.09045	-.01373	.00177	.00037
15.000	-.07814	.00926	.03157	-.00270	.00185	.00114	-.07903	-.01016	.00207	.00065
30.000	-.05765	.00970	.02081	-.00154	.00175	.00120	-.05849	-.00459	.00199	.00074
45.000	-.04554	.01020	.01408	-.00087	.00125	.00102	-.04666	-.00112	.00146	.00069
60.000	-.03303	.01073	.00743	-.00022	.00075	.00088	-.03465	.00242	.00094	.00067
GRADIENT	.00330	-.00144	-.00576	.00022	.00016	-.00010	.00355	-.00060	.00013	-.00014

CA20 (747/1 01 S1) - (01 S1) D/S (142 - 010) (VGN142) (11 MAR 75)

REFERENCE DATA

SREF =	2690.0000 SQ.FT.	XMRP =	1109.0000 IN.XO
LREF =	474.8100 IN.	YMRP =	.0000 IN.YO
BREF =	936.6900 IN.	ZMRP =	375.0000 IN.ZO
SCALE =	.0300		

PARAMETRIC DATA

ALPHAC =	4.000	BETAC =	.000
ELV-IB =	-10.000	ELV-OB =	-7.000
ELEVON =	5.000	MACH =	.600
PHI =	.000	DX =	.000
DY =	.000	BETAO =	.000

RN/L = 3.27 GRADIENT INTERVAL = -1.00/ 4.00

ALPHAO = 10.000

DZ	DCN	DCA	DCLM	DCY	DCBL	DCYN	DCL	DCD	DCSL	DCLN
.000	-.15447	.00731	.05240	-.00042	-.00074	-.00028	-.15339	-.01963	-.00077	-.00015
3.000	-.13952	.00514	.04050	-.00033	-.00047	-.00020	-.13829	-.01917	-.00050	-.00012
7.500	-.12507	.00403	.03434	-.00074	-.00023	.00002	-.12387	-.01775	-.00022	.00006
15.000	-.10562	.00335	.02704	-.00009	.00007	.00020	-.10460	-.01504	.00010	.00018
30.000	-.07491	.00225	.01836	.00059	.00010	.00073	-.07416	-.01079	.00023	.00070
45.000	-.05569	.00222	.01259	.00084	-.00020	.00035	-.05521	-.00765	-.00013	.00039
60.000	-.03541	.00195	.00685	.00119	-.00043	.00025	-.03522	-.00422	-.00038	.00032
GRADIENT	.00498	-.00072	-.00397	.00003	.00009	.00003	.00503	.00015	.00009	.00001

CA20 (747/1 01 S1) - (01 S1) D/S (142 - 010) (VGN142) (11 MAR 75)

REFERENCE DATA

SREF =	2690.0000 SQ.FT.	XMRP =	1109.0000 IN.XO
LREF =	474.0100 IN.	YMRP =	.0000 IN.YO
BREF =	936.6800 IN.	ZMRP =	375.0000 IN.ZO
SCALE =	.0300		

PARAMETRIC DATA

ALPHAC =	4.000	BETAC =	.000
ELV-IB =	-10.000	ELV-OB =	-7.000
ELEVON =	5.000	MACH =	.600
PHI =	.000	DX =	.000
DY =	.000	BETAO =	.000

RN/L = 3.23 GRADIENT INTERVAL = -1.00/ 4.00

ALPHAO = 14.000

DZ	DCN	DCA	DCLM	DCY	DCBL	DCYN	DCL	DCD	DCSL	DCLN
.000	-.12765	.01354	.07343	-.00483	.00151	.00157	-.12713	-.01775	.00184	.00116
3.000	-.11879	.01039	.05675	-.00418	.00185	.00131	-.11778	-.01856	.00211	.00083
7.500	-.11002	.00893	.04515	-.00344	.00170	.00108	-.10991	-.01795	.00191	.00064
15.000	-.09554	.00902	.03453	-.00270	.00154	.00097	-.09585	-.01481	.00173	.00057
30.000	-.07348	.00964	.02227	-.00134	.00153	.00114	-.07363	-.00842	.00176	.00073
45.000	-.05921	.01014	.01547	-.00100	.00135	.00096	-.05990	-.00449	.00154	.00061
60.000	-.04481	.01050	.00859	-.00075	.00117	.00081	-.04602	-.00085	.00133	.00059
GRADIENT	.00895	-.00105	-.00558	.00022	.00011	-.00008	.01312	-.00731	.00009	-.00011

CA20 (747/1 01 S1) - (01 S1) D/S (143 - 010) (VGN143) (11 MAR 75)

REFERENCE DATA

SREF =	2690.0000 SQ.FT.	XMRP =	1109.0000 IN.XO
LREF =	474.0100 IN.	YMRP =	.0000 IN.YO
BREF =	936.6800 IN.	ZMRP =	375.0000 IN.ZO
SCALE =	.0300		

PARAMETRIC DATA

ALPHAC =	4.000	BETAC =	.000
RUD-U =	15.000	RUD-L =	15.000
ELEVON =	5.000	AILRON =	.000
PHI =	.000	DX =	.000
DY =	.000	BETAO =	.000

RN/L = 3.27 GRADIENT INTERVAL = -1.00/ 4.00

ALPHAO = 10.000

DZ	DCN	DCA	DCLM	DCY	DCBL	DCYN	DCL	DCD	DCSL	DCLN
.000	-.14721	.00738	.05088	.00073	-.00109	-.00040	-.14626	-.01829	-.00114	-.00020
3.000	-.13268	.00529	.03868	.00080	-.00079	-.00029	-.13158	-.01783	-.00083	-.00015
7.500	-.12118	.00510	.03443	.00065	-.00062	-.00001	-.12022	-.01602	-.00061	.00010
15.000	-.10170	.00440	.02694	.00119	-.00029	-.00002	-.10092	-.01333	-.00029	.00003
30.000	-.07138	.00271	.01729	.00119	.00008	.00054	-.07077	-.00972	.00017	.00052
45.000	-.05542	.00262	.01221	.00139	-.00033	.00051	-.05501	-.00714	-.00024	.00057
60.000	-.03659	.00206	.00648	.00147	-.00059	.00066	-.03639	-.00433	-.00046	.00075
GRADIENT	.00484	-.00070	-.00407	.00002	.00010	.00003	.00489	.00015	.00010	.00002

ORIGINAL PAGE IS
OF POOR QUALITY

CA20 (747/1 01 SI) - (01 SI) D/S (143 - 010) (VGN143) (11 MAR 75)

REFERENCE DATA

SREF =	2690.0000 SQ.FT.	XMRP =	1109.0000 IN.XO		
LREF =	474.8100 IN.	YMRP =	.0000 IN.YO		
BREF =	936.6800 IN.	ZMRP =	375.0000 IN.ZO		
SCALE =	.0300				

PARAMETRIC DATA

ALPHAC =	4.000	BETAC =	.000
RUD-U =	15.000	RUD-L =	15.000
ELEVON =	5.000	AILRON =	.000
PHI =	.000	DX =	.000
DY =	.000	BETAO =	.000

RN/L = 3.23 GRADIENT INTERVAL = -1.00/ 4.00

ALPHAO = 14.000

DZ	DCN	DCA	DCLM	DCY	DCBL	DCYN	DCL	DCD	DCSL	DCLN
.000	-.10880	.01312	.06291	-.00223	.00090	.00099	-.10874	-.01359	.00101	.00077
3.000	-.10356	.01097	.05161	-.00163	.00099	.00079	-.10314	-.01441	.00115	.00053
7.500	-.09772	.01058	.04374	-.00145	.00115	.00069	-.09739	-.01337	.00128	.00039
15.000	-.08329	.00982	.03215	-.00121	.00127	.00078	-.08319	-.01062	.00142	.00045
30.000	-.06217	.01050	.02154	-.00054	.00139	.00099	-.06289	-.00976	.00159	.00062
45.000	-.04808	.01031	.01376	-.00000	.00124	.00095	-.04914	-.00163	.00143	.00063
60.000	-.03354	.00934	.00576	.00051	.00111	.00095	-.03492	.00144	.00131	.00065
GRADIENT	.00175	-.00072	-.00377	.00020	.00006	-.00007	.00187	-.00027	.00005	-.00003

CA20 (747/1 01 SI) - (01 SI) D/S (144 - 018) (VGN144) (11 MAR 75)

REFERENCE DATA

SREF =	2690.0000 SQ.FT.	XMRP =	1109.0000 IN.XO		
LREF =	474.8100 IN.	YMRP =	.0000 IN.YO		
BREF =	936.6800 IN.	ZMRP =	375.0000 IN.ZO		
SCALE =	.0300				

PARAMETRIC DATA

ALPHAC =	4.000	BETAC =	.000
RUD-U =	15.000	RUD-L =	15.000
ELEVON =	5.000	AILRON =	.000
PHI =	.000	DX =	.000
DY =	.000	BETAO =	.000

RN/L = 3.35 GRADIENT INTERVAL = -1.00/ 4.00

ALPHAO = 10.000

DZ	DCN	DCA	DCLM	DCY	DCBL	DCYN	DCL	DCD	DCSL	DCLN
.000	-.20533	.00168	.08380	.00015	-.00127	.00004	-.20250	-.03480	-.00129	.00026
3.000	-.19815	.00163	.07794	.00048	-.00097	.00004	-.19542	-.03280	-.00095	.00021
7.500	-.18822	.00196	.07364	.00075	-.00084	.00000	-.18570	-.03075	-.00083	.00015
15.000	-.17206	.00223	.06837	.00111	-.00045	.00021	-.16983	-.02763	-.00040	.00009
30.000	-.14549	.00276	.06150	.00270	-.00025	.00019	-.14376	-.02254	-.00021	.00023
45.000	-.12788	.00308	.05537	.00295	-.00032	-.00003	-.12647	-.01917	-.00032	.00005
60.000	-.10853	.00345	.05101	.00357	-.00037	-.00024	-.10748	-.01544	-.00041	-.00017
GRADIENT	.00240	-.00001	-.00195	.00011	.00010	-.00000	.00235	.00040	.00010	-.00002

CA20 (747/1 01 S1) - (01 S1) D/S (145 - 008) (VGN145) (14 MAR 75)

REFERENCE DATA

SREF =	2690.0000 SQ.FT.	XMRP =	1109.0000 IN.XO
LREF =	474.8100 IN.	YMRP =	.0000 IN.YO
BREF =	936.6800 IN.	ZMRP =	375.0000 IN.ZO
SCALE =	.0300		

PARAMETRIC DATA

ALPHAC =	4.000	BETAC =	.000
ELEVON =	.000	PHI =	.000
DX =	.000	DY =	.000
MACH =	.600	BETAO =	.000
ELV-IB =	.000	ELV-OB =	3.000

RN/L = 3.37 GRADIENT INTERVAL = -1.00/ 4.00

ALPHAO = 10.000

DZ	DCN	DCA	DCLM	DCY	DCBL	DCYN	DCL	DCD	DCSL	DCLN
.000	-.15334	.00782	.05129	-.00070	-.00064	.00016	-.15237	-.01892	-.00060	.00027
3.000	-.13921	.00556	.03833	-.00044	-.00043	.00024	-.13907	-.01879	-.00038	.00031
7.500	-.12698	.00471	.03318	-.00055	-.00032	.00042	-.12587	-.01741	-.00024	.00047
15.000	-.10715	.00374	.02581	-.00034	-.00003	.00067	-.10617	-.01492	.00009	.00056
30.000	-.07859	.00295	.01803	.00047	.00016	.00091	-.07801	-.01076	.00032	.00097
45.000	-.05548	.00138	.00775	.00054	-.00026	.00079	-.05480	-.00826	-.00012	.00082
60.000	-.03115	.00008	-.00170	.00104	-.00057	.00072	-.03069	-.00533	-.00043	.00081
GRADIENT	.00471	-.00075	-.00432	.00009	.00007	.00002	.00477	.00007	.00007	.00001

RN/L = 3.36 GRADIENT INTERVAL = -1.00/ 4.00

ALPHAO = 14.000

DZ	DCN	DCA	DCLM	DCY	DCBL	DCYN	DCL	DCD	DCSL	DCLN
.000	-.12000	.01391	.07315	-.00162	-.00033	.00057	-.11980	-.01554	-.00018	.00064
3.000	-.10728	.00554	.05289	-.00115	-.00009	.00047	-.10640	-.01670	.00002	.00047
7.500	-.09919	.00830	.04261	-.00081	.00010	.00053	-.09825	-.01594	.00022	.00049
15.000	-.08485	.00780	.03173	-.00045	.00023	.00060	-.08422	-.01295	.00037	.00053
30.000	-.06198	.00814	.01983	.00078	.00030	.00048	-.06209	-.00709	.00040	.00039
45.000	-.04973	.00865	.01410	.00057	.00049	.00077	-.05034	-.00364	.00065	.00063
60.000	-.03745	.00917	.00855	.00038	.00071	.00108	-.03656	-.00016	.00055	.00093
GRADIENT	.00424	-.00146	-.00675	.00015	.00008	-.00004	.00447	-.00039	.00007	-.00005

CA20 (747/1 01 S1) - (01 S1) D/S (146 - 011) (VGN146) (14 MAR 75)

REFERENCE DATA

SREF = 2690.0000 SQ.FT. XMRP = 1109.0000 IN.XO
LREF = 474.8100 IN. YMRP = .0000 IN.YO
BREF = 936.6300 IN. ZMRP = 375.0000 IN.ZO
SCALE = .0300

PARAMETRIC DATA

ALPHAC =	4.000	BETAC =	.000
ELEVON =	10.000	PHI =	.000
DX =	.000	DY =	.000
MACH =	.600	BETAO =	.000
ELV-IB =	.000	ELV-OB =	3.000

RN/L = 3.33 GRADIENT INTERVAL = -1.00/ 4.00

ALPHAO = 10.000

DZ	DCN	DCA	DCLM	DCY	DCBL	DCYN	DCL	DCD	DCSL	DCLN
.000	-.14960	.00724	.05194	-.00029	-.00046	-.00013	-.14859	-.01884	-.00048	-.00005
3.000	-.13399	.00468	.03983	-.00022	-.00022	-.00002	-.13277	-.01665	-.00022	.00001
7.500	-.11993	.00397	.03300	.00028	.00007	-.00002	-.11880	-.01692	.00006	-.00003
15.000	-.10001	.00381	.02613	.00005	.00025	.00046	-.09915	-.01361	.00033	.00041
30.000	-.06957	.00220	.01760	.00083	.00048	.00075	-.06890	-.00992	.00060	.00065
45.000	-.05282	.00227	.01229	.00135	.00004	.00050	-.05241	-.00694	.00013	.00049
60.000	-.03391	.00210	.00648	.00195	-.00023	.00035	-.03376	-.00382	-.00017	.00038
GRADIENT	.00520	-.00085	-.00404	.00002	.00008	.00004	.00527	.00006	.00009	.00002

RN/L = 3.27 GRADIENT INTERVAL = -1.00/ 4.00

ALPHAO = 14.000

DZ	DCN	DCA	DCLM	DCY	DCBL	DCYN	DCL	DCD	DCSL	DCLN
.000	-.11626	.01408	.06762	.00001	-.00167	-.00039	-.11621	-.01447	-.00172	.00002
3.000	-.10687	.01108	.05219	.00092	-.00136	-.00073	-.10638	-.01511	-.00150	-.00038
7.500	-.09934	.01046	.04237	.00174	-.00148	-.00097	-.09892	-.01389	-.00167	-.00059
15.000	-.08759	.01120	.03292	.00215	-.00171	-.00105	-.08770	-.01033	-.00191	-.00061
30.000	-.06935	.01403	.02103	.00197	-.00105	-.00008	-.06972	-.00292	-.00104	.00018
45.000	-.05525	.01408	.01479	.00229	-.00146	-.00003	-.05702	.00030	-.00143	.00033
60.000	-.04188	.01392	.00856	.00265	-.00190	-.00000	-.04400	.00338	-.00184	.00046
GRADIENT	.00313	-.00100	-.00514	.00030	.00010	-.00011	.00328	-.00021	.00007	-.00013

CA20 (747/1 01 S1) - (01 S1) D/S (149 - 009) (VGN149) (11 MAR 75)

REFERENCE DATA

SREF =	2690.0000 SQ.FT.	XMRP =	1109.0000 IN.XO
LREF =	474.8100 IN.	YMRP =	.0000 IN.YO
BREF =	936.6800 IN.	ZMRP =	375.0000 IN.ZO
SCALE =	.0300		

PARAMETRIC DATA

ALPHAC =	4.000	BETAC =	.000
RUD-U =	.000	RUD-L =	.000
ELEVON =	5.000	AILRON =	-10.000
PHI =	.000	DX =	.000
DY =	.000	BETAO =	.000

RN/L = 3.34 GRADIENT INTERVAL = -1.00/ 4.00

ALPHAO = 10.000

DZ	DCN	DCA	DCLM	DCY	DCBL	DCYN	DCL	DCD	DCSL	DCLN
.000	-.15192	.00745	.05063	-.00251	-.00447	-.00114	-.15050	-.01905	-.00460	-.00035
3.000	-.13666	.00537	.03805	-.00235	-.00375	-.00071	-.13551	-.01844	-.00382	-.00005
7.500	-.12269	.00415	.03151	-.00223	-.00345	-.00025	-.12155	-.01721	-.00344	.00035
15.000	-.10000	.00310	.02188	-.00159	-.00298	.00018	-.09902	-.01431	-.00290	.00070
30.000	-.06993	.00232	.01189	-.00008	-.00240	.00098	-.06927	-.00995	-.00221	.00128
45.000	-.05045	.00237	.00506	.00022	-.00255	.00065	-.05009	-.00643	-.00240	.00108
60.000	-.02917	.00234	-.00193	.00193	-.00254	.00062	-.02913	-.00276	-.00240	.00105
GRADIENT	.00509	-.00069	-.00419	.00005	.00024	.00014	.00513	.00020	.00026	.00010

RN/L = 3.29 GRADIENT INTERVAL = -1.00/ 4.00

ALPHAO = 14.000

DZ	DCN	DCA	DCLM	DCY	DCBL	DCYN	DCL	DCD	DCSL	DCLN
.000	-.10946	.01518	.05951	-.00523	-.00383	.00021	-.10963	-.01273	-.00367	.00113
3.000	-.11126	.01159	.05436	-.00312	-.00273	-.00058	-.11075	-.01567	-.00279	.00010
7.500	-.10557	.01077	.04694	-.00250	-.00184	-.00059	-.10593	-.01509	-.00192	-.00013
15.000	-.03949	.00946	.02904	-.00206	-.00111	.00010	-.08926	-.01126	-.00105	.00035
30.000	-.06107	.01037	.01601	-.00023	-.00068	.00022	-.05176	-.00471	-.00051	.00038
45.000	-.04731	.01060	.00797	.00025	-.00080	.00024	-.04847	-.00116	-.00071	.00043
60.000	-.03328	.01079	-.00012	.00076	-.00089	.00031	-.03490	.00242	-.00079	.00051
GRADIENT	-.00060	-.00085	-.00171	.00070	.00037	-.00026	-.00037	-.00093	.00029	-.00034

CA20 747/1 CARRIER DATA (SGN034) (26 NOV 75)

REFERENCE DATA

SREF = 5500.0000 SQ.FT. XMRP = 1339.9000 IN.XC
LREF = 327.7800 IN. YMRP = .0000 IN.YC
BREF = 2348.0400 IN. ZMRP = 190.8000 IN.ZC
SCALE = .0300

PARAMETRIC DATA

BETAC = -5.000 ELV-IB = .000
ELV-OB = 3.000 RUD-U = .000
RUD-L = .000 RUD747 = .000

RN/L = 3.27 GRADIENT INTERVAL = -1.00/ 5.00

MACH = .600

ALPHAW	CN-C	CA-C	CLM-C	CY-C	CBL-C	CYN-C	CL-C	CD-C	CSL-C	CLN-C
2.000	.09826	.03251	-.14653	.08008	.00958	-.01788	.09533	.03987	.00877	-.01832
4.000	.29083	.01961	-.19400	.07742	.01159	-.01698	.28704	.04335	.01021	-.01790
6.000	.48276	-.00149	-.23328	.07473	.01339	-.01588	.47871	.05189	.01150	-.01731
8.000	.67358	-.02244	-.25807	.07189	.01479	-.01468	.66873	.07407	.01250	-.01659
10.000	.86172	-.02776	-.26503	.07385	.01433	-.01590	.85256	.12347	.01139	-.01803
12.000	.99737	-.02028	-.28006	.07397	.01465	-.01582	.98051	.18439	.01125	-.01846
GRADIENT	.09628	-.00645	-.02373	-.00132	.00101	.00045	.09586	.00174	.00072	.00021

CA20 747/1 CARRIER DATA (SGN035) (26 NOV 75)

REFERENCE DATA

SREF = 5500.0000 SQ.FT. XMRP = 1339.9000 IN.XC
LREF = 327.7800 IN. YMRP = .0000 IN.YC
BREF = 2348.0400 IN. ZMRP = 190.8000 IN.ZC
SCALE = .0300

PARAMETRIC DATA

BETAC = .000 ELV-IB = .000
ELV-OB = 3.000 RUD-U = .000
RUD-L = .000 RUD747 = .000

RN/L = 3.31 GRADIENT INTERVAL = -1.00/ 5.00

MACH = .600

ALPHAW	CN-C	CA-C	CLM-C	CY-C	CBL-C	CYN-C	CL-C	CD-C	CSL-C	CLN-C
2.000	.08859	.03801	-.13455	-.00641	-.00046	.00250	.08548	.04505	-.00040	.00250
4.000	.28435	.02473	-.19169	-.00735	-.00036	.00261	.28035	.04801	-.00024	.00262
6.000	.47882	.00391	-.24007	-.00868	-.00082	.00266	.47425	.05714	-.00059	.00272
8.000	.67379	-.01952	-.26561	-.00888	-.00012	.00292	.66839	.07709	.00022	.00294
10.000	.85645	-.02609	-.25321	-.01043	-.00069	.00339	.84633	.12498	-.00019	.00348
12.000	1.01314	-.04026	-.28933	-.00951	-.00126	.00304	.99749	.17255	-.00065	.00329
GRADIENT	.09788	-.00664	-.02857	-.00047	.00005	.00006	.09743	.00148	.00008	.00006

ORIGINAL PAGE IS OF POOR QUALITY

DATE 26 NOV 75 TABULATED SOURCE DATA - CA20

CA20 747/1

CARRIER DATA (SGN035) (26 NOV 75)

REFERENCE DATA

SREF =	5500.0000 SQ.FT.	XMRP =	1339.9000	IN.XC	
LREF =	327.7800 IN.	YMRP =	.0000	IN.YC	
BREF =	2348.0400 IN.	ZMRP =	190.8000	IN.ZC	
SCALE =	.0300				

PARAMETRIC DATA

BETAC =	5.000	ELV-IB =	.000
ELV-OB =	3.000	RUD-U =	.000
RUD-L =	.000	RUD747 =	.000

RN/L = 3.27 GRADIENT INTERVAL = -1.00/ 5.00

MACH = .600

ALPHAW	CN-C	CA-C	CLM-C	CY-C	CBL-C	CYN-C	CL-C	CD-C	CSL-C	CLN-C
2.000	.10667	.03168	-.16076	-.10364	-.01166	.02520	.10372	.03919	-.01062	.02269
4.000	.29830	.01872	-.20384	-.09793	-.01276	.02232	.29458	.04286	-.01098	.02332
6.000	.49060	-.00222	-.23589	-.09394	-.01411	.02025	.48661	.05185	-.01171	.02178
8.000	.68137	-.02400	-.26539	-.09081	-.01486	.01881	.67660	.07360	-.01195	.02079
10.000	.86215	-.02634	-.27773	-.09320	-.01205	.02015	.85257	.12521	-.00830	.02282
12.000	1.00673	-.02363	-.27849	-.09168	-.01476	.01847	.99024	.18348	-.01049	.02146
GRADIENT	.09591	-.00648	-.02154	.00286	-.00055	-.00144	.09543	.00183	-.00018	-.00118

CA20 747/1 01 SI

CARRIER DATA (SGN037) (26 NOV 75)

REFERENCE DATA

SREF =	5500.0000 SQ.FT.	XMRP =	1339.9000	IN.XC	
LREF =	327.7800 IN.	YMRP =	.0000	IN.YC	
BREF =	2348.0400 IN.	ZMRP =	190.8000	IN.ZC	
SCALE =	.0300				

PARAMETRIC DATA

ALPHAC =	4.000	BETAC =	.000
ELV-IB =	.000	ELV-OB =	3.000
ELEVON =	5.000	BETAO =	.000
PHI =	.000	DX =	.000
DY =	.000		

RN/L = 3.29 GRADIENT INTERVAL = .00/ 12.00

MACH = .600

ALPHAO	CN-C	CA-C	CLM-C	CY-C	CBL-C	CYN-C	CL-C	CD-C	CSL-C	CLN-C
6.000	.39303	.01904	-.22093	-.00636	.00035	.00125	.37778	.06053	.00042	.00120
8.000	.35227	.01873	-.16943	-.00668	.00022	.00124	.34719	.05718	.00029	.00121
10.000	.31676	.01852	-.11404	-.00661	.00040	.00118	.31165	.05350	.00047	.00112
12.000	.28219	.01804	-.06154	-.00669	.00054	.00110	.27749	.04959	.00059	.00103
14.000	.24779	.01822	-.02132	-.00708	.00050	.00151	.24324	.04633	.00060	.00144
16.000	.20884	.01710	.03220	-.00677	.00055	.00121	.20458	.04132	.00062	.00114
18.000	.16819	.01566	.10153	-.00596	.00050	.00063	.16427	.03581	.00051	.00057
GRADIENT	-.01690	-.00016	.02663	-.00005	.00004	-.00003	-.01681	-.00183	.00003	-.00003

DATE 26 NOV 75 TABULATED SOURCE DATA - CA20

CA20 747/1 01 S1 CARRIER DATA (5GN03B) (26 NOV 75)

REFERENCE DATA

SREF =	5500.0000 SQ.FT.	XMRP =	1339.9000 IN.XC		
LREF =	327.7800 IN.	YMRP =	.0000 IN.YC		
BREF =	2348.0400 IN.	ZMRP =	190.8000 IN.ZC		
SCALE =	.0300				

PARAMETRIC DATA

ALPHAC =	4.000	ELV-IB =	.000
ELV-OB =	3.000	ELEVON =	5.000
BETAO =	.000	PHI =	.000
DX =	.000	DY =	.000

RN/L = 3.33 GRADIENT INTERVAL = -5.00/ 5.00

MACH = .600

BETA	CN-C	CA-C	CLM-C	CY-C	CBL-C	CYN-C	CL-C	CD-C	CSL-C	CLN-C
-10.000	.35409	.00538	-.19255	.17809	.02787	-.03542	.35035	.04398	.02402	-.03818
-7.000	.33721	.00849	-.16783	.12212	.02151	-.02594	.33318	.04535	.01867	-.02816
-5.000	.32671	.01254	-.13941	.08406	.01553	-.01762	.32233	.04824	.01352	-.01921
-3.000	.32295	.01568	-.12023	.04723	.00868	-.01039	.31827	.05094	.00750	-.01123
-2.000	.32145	.01700	-.11653	.02902	.00577	-.00671	.31665	.05206	.00495	-.00732
.000	.32463	.01862	-.11631	-.01075	-.00015	.00225	.31966	.05396	.00014	.00226
1.000	.32516	.01836	-.11358	-.02790	-.00275	.00602	.32021	.05384	-.00204	.00626
2.000	.32666	.01742	-.11660	-.04690	-.00574	.01040	.32181	.05302	-.00454	.01099
3.000	.33014	.01556	-.12309	-.06730	-.00845	.01479	.32545	.05158	-.00682	.01561
5.000	.33814	.01159	-.13937	-.10105	-.01415	.01996	.33382	.04833	-.01186	.02145
10.000	.36124	.00365	-.18504	-.19058	-.02541	.03551	.35761	.04312	-.02147	.03816
GRADIENT	.00114	-.00002	.00001	-.01870	-.00293	.00392	.00113	.00009	-.00248	.00422

CA20 747/1 01 S1 CARRIER DATA (SGN039) (26 NOV 75)

REFERENCE DATA

SREF = 5500.0000 SQ.FT. XMRP = 1339.9000 IN.XC
LREF = 327.7800 IN. YMRP = .0000 IN.YC
BREF = 2348.0400 IN. ZMRP = 190.8000 IN.ZC
SCALE = .0300

PARAMETRIC DATA

ALPHAC =	4.000	ELV-1B =	.000
ELV-03 =	3.000	ELEVCN =	5.000
BETAO =	.000	PHI =	.000
DX =	.000	DY =	10.000

RN/L = 3.35 GRADIENT INTERVAL = -5.00/ 5.00

MACH = .600

BETA	CN-C	CA-C	CLM-C	CY-C	CBL-C	CYN-C	CL-C	CD-C	CSL-C	CLN-C
-10.000	.35407	.00915	-.23037	.15681	.03280	-.03259	.34986	.04770	.02922	-.03585
-7.000	.33816	.01102	-.20724	.10549	.02656	-.02521	.33387	.04795	.02377	-.02795
-5.000	.33491	.01459	-.19068	.06781	.02101	-.01712	.33029	.05109	.01902	-.01927
-3.000	.33108	.01751	-.16509	.02978	.01479	-.00899	.32619	.05353	.01373	-.01046
-2.000	.32962	.01853	-.15500	.01298	.01185	-.00572	.32464	.05439	.01110	-.00694
.000	.33028	.01976	-.13627	-.01805	.00643	-.00055	.32516	.05565	.00640	-.00119
1.000	.33073	.01973	-.12650	-.03037	.00390	.00108	.32562	.05574	.00408	.00067
2.000	.33041	.01935	-.12046	-.04516	.00133	.00310	.32534	.05532	.00176	.00302
3.000	.33126	.01808	-.11265	-.06166	-.00113	.00618	.32632	.05419	-.00041	.00630
5.000	.33540	.01371	-.11037	-.09993	-.00672	.01482	.33088	.05017	-.00499	.01559
10.000	.35290	.00177	-.14343	-.19808	-.01970	.03572	.34950	.04041	-.01577	.03776
GRADIENT	.00005	.00001	.00834	-.01615	-.00273	.00292	.00005	.00002	-.00239	.00321

CA20 747/0 01 S1 AT38 AT39 CARRIER DATA (SGN040) (26 NOV 75)

REFERENCE DATA

SREF = 5500.0000 SQ.FT. XMRP = 1339.9000 IN.XC
LREF = 327.7800 IN. YMRP = .0000 IN.YC
BREF = 2348.0400 IN. ZMRP = 190.8000 IN.ZC
SCALE = .0300

PARAMETRIC DATA

ALPHAC =	.000	BETAC =	.000
ELV-1B =	.000	ELV-03 =	3.000
ELEVCN =	5.000	MACH =	.600
BETAO =	.000	PHI =	.000
DX =	.000	DY =	.000

RN/L = 3.37 GRADIENT INTERVAL = -1.00/ 4.00

ALPHAO = 8.000

DZ	CN-C	CA-C	CLM-C	CY-C	CBL-C	CYN-C	CL-C	CD-C	CSL-C	CLN-C
.000	.05543	.02725	.03535	-.00671	.00060	.00169	.05281	.03288	.00063	.00165
3.000	.06867	.02813	.02348	-.00558	.00073	.00113	.06601	.03430	.00074	.00109
7.500	.07451	.02856	.01922	-.00476	.00083	.00071	.07164	.03492	.00083	.00057
15.000	.10171	.02979	-.01985	-.00721	.00039	.00214	.09899	.03704	.00044	.00211
30.000	.14532	.03058	-.07906	-.00846	.00004	.00305	.14258	.03922	.00011	.00303
45.000	.16082	.03034	-.10188	-.00853	-.00018	.00308	.15909	.03944	-.00010	.00307
60.000	.12584	.02264	-.04316	.00329	.00195	-.00273	.12336	.03067	.00164	-.00281
GRADIENT	.00441	.00029	-.00386	.00038	.00004	-.00019	.00440	.00044	.00004	-.00019

CA20 747/0 01 S1 AT38 AT39 CARRIER DATA (SGN041) (26 NOV 75)

REFERENCE DATA

SREF =	5500.0000 SQ.FT.	XMRP =	1339.9000	IN.XC	
LREF =	327.7800 IN.	YMRP =	.0000	IN.YC	
BREF =	2348.0400 IN.	ZMRP =	190.8000	IN.ZC	
SCALE =	.0300				

PARAMETRIC DATA

ALPHAC =	4.000	BETAC =	.000
ELV-IB =	.000	ELV-OB =	3.000
ELEVON =	5.000	MACH =	.600
BETAO =	.000	PHI =	.000
DX =	.000	DY =	.000

RN/L = 3.27 GRADIENT INTERVAL = -1.00/ 4.00

ALPHAO = 12.000

DZ	CN-C	CA-C	CLM-C	CY-C	CBL-C	CYN-C	CL-C	CD-C	CSL-C	CLN-C
.000	.37150	-.00102	-.04669	-.00639	.00070	.00073	.36828	.03969	.00072	.00064
3.000	.38456	-.00012	-.04686	-.00675	.00059	.00120	.38118	.04189	.00066	.00113
7.500	.40672	.00093	-.07035	-.00749	.00032	.00182	.40314	.04513	.00046	.00177
15.000	.43721	.00142	-.11192	-.00882	.00001	.00248	.43344	.04859	.00021	.00246
30.000	.48000	.00054	-.16189	-.00902	-.00034	.00298	.47612	.05190	-.00009	.00299
45.000	.50790	-.00119	-.19045	-.00900	-.00045	.00298	.50407	.05288	-.00020	.00300
60.000	.52613	-.00245	-.21148	-.00890	-.00055	.00297	.52235	.05339	-.00030	.00300
GRADIENT	.00435	.00030	-.00006	-.00012	-.00004	.00016	.00430	.00073	-.00002	.00016

CA20 747/0 01 S1 AT38 AT39 CARRIER DATA (SGN042) (26 NOV 75)

REFERENCE DATA

SREF =	5500.0000 SQ.FT.	XMRP =	1339.9000	IN.XC	
LREF =	327.7800 IN.	YMRP =	.0000	IN.YC	
BREF =	2348.0400 IN.	ZMRP =	190.8000	IN.ZC	
SCALE =	.0300				

PARAMETRIC DATA

ALPHAC =	8.000	BETAC =	.000
ELV-IB =	.000	ELV-OB =	3.000
ELEVON =	5.000	MACH =	.600
BETAO =	.000	PHI =	.000
DX =	.000	DY =	.000

RN/L = 3.33 GRADIENT INTERVAL = -1.00/ 4.00

ALPHAO = 16.000

DZ	CN-C	CA-C	CLM-C	CY-C	CBL-C	CYN-C	CL-C	CD-C	CSL-C	CLN-C
.000	.66067	-.03699	-.13926	-.01022	-.00033	.00247	.65590	.07746	-.00000	.00251
3.000	.67360	-.03500	-.14161	-.00972	-.00016	.00210	.66932	.08154	.00010	.00212
7.500	.69301	-.03223	-.14793	-.00914	.00003	.00165	.68700	.08744	.00021	.00165
15.000	.72443	-.03116	-.17725	-.01036	-.00040	.00256	.71781	.09368	-.00006	.00262
30.000	.77171	-.03171	-.22614	-.01164	-.00072	.00350	.76455	.10092	-.00022	.00360
45.000	.80096	-.03206	-.24898	-.01086	-.00073	.00313	.79345	.10536	-.00029	.00324
60.000	.81682	-.03153	-.26089	-.01021	-.00058	.00303	.81098	.10881	-.00016	.00311
GRADIENT	.00431	.00066	-.00112	.00016	.00005	-.00012	.00414	.00136	.00003	-.00013

CA20 747/0 01 S1 AT38 AT39 CARRIER DATA (5GN043) (26 NOV 75)

REFERENCE DATA

SREF =	5500.0000 SQ.FT.	XMRP =	1339.9000 IN.XC
LREF =	327.7800 IN.	YMRP =	.0000 IN.YC
BREF =	2348.0400 IN.	ZMRP =	190.8000 IN.ZC
SCALE =	.0300		

PARAMETRIC DATA

ALPHAC =	4.000	BETAC =	-5.000
ELV-IB =	.000	ELV-OB =	3.000
ELEVON =	5.000	MACH =	.600
BETAO =	-5.000	PHI =	.000
DX =	.000	DY =	.000

RN/L = 3.34 GRADIENT INTERVAL = -1.00/ 4.00

ALPHAO = 12.000

DZ	CN-C	CA-C	CLM-C	CY-C	CBL-C	CYN-C	CL-C	CD-C	CSL-C	CLN-C
.000	.37281	-.00389	-.04545	.08008	.01265	-.00929	.36682	.03695	.01150	-.01064
3.000	.39324	-.00457	-.06740	.08571	.01446	-.01550	.39323	.03835	.01265	-.01780
7.500	.42151	-.00429	-.09884	.08384	.01520	-.01626	.41835	.04114	.01333	-.01782
15.000	.45120	-.00382	-.13550	.07755	.01524	-.01395	.44787	.04446	.01361	-.01553
30.000	.49009	-.00472	-.17767	.07198	.01479	-.01127	.48666	.04737	.01343	-.01281
45.000	.51580	-.00647	-.20034	.07459	.01589	-.01288	.51243	.04815	.01437	-.01452
60.000	.53177	-.00780	-.21563	.07820	.01611	-.01335	.52847	.04837	.01454	-.01501
GRADIENT	.00781	-.00030	-.00598	.00221	.00060	-.00207	.00780	.00047	.00039	-.00212

CA20 747/0 02 S1 AT38 AT39 CARRIER DATA (5GN044) (26 NOV 75)

REFERENCE DATA

SREF =	5500.0000 SQ.FT.	XMRP =	1339.9000 IN.XC
LREF =	327.7800 IN.	YMRP =	.0000 IN.YC
BREF =	2348.0400 IN.	ZMRP =	190.8000 IN.ZC
SCALE =	.0300		

PARAMETRIC DATA

ALPHAC =	4.000	BETAC =	-5.000
ELV-IB =	.000	ELV-OB =	3.000
ELEVON =	5.000	MACH =	.600
BETAO =	-5.000	PHI =	.000
DX =	.000	DY =	.000

RN/L = 3.33 GRADIENT INTERVAL = -1.00/ 4.00

ALPHAO = 12.000

DZ	CN-C	CA-C	CLM-C	CY-C	CBL-C	CYN-C	CL-C	CD-C	CSL-C	CLN-C
.000	.38322	-.00316	-.05488	.07370	.01199	-.00554	.38022	.03648	.01122	-.00684
3.000	.39763	-.00315	-.07210	.07901	.01338	-.01048	.38450	.03695	.01210	-.01189
7.500	.41579	-.00301	-.10509	.07846	.01393	-.01234	.41252	.04187	.01246	-.01380
15.000	.44748	-.00330	-.14329	.07462	.01422	-.01146	.44410	.04469	.01284	-.01295
30.000	.48772	-.00467	-.18363	.07630	.01544	-.01310	.48429	.04726	.01369	-.01470
45.000	.51307	-.00606	-.20462	.07595	.01600	-.01346	.50967	.04832	.01442	-.01511
60.000	.52897	-.00725	-.21861	.07618	.01614	-.01364	.52662	.04877	.01454	-.01531
GRADIENT	.00814	.00000	-.00574	.00177	.00046	-.00165	.00809	.00082	.00029	-.00168

CA20 747/1 01 S1 AT38 AT39 CARRIER DATA (5GN045) (26 NOV 75)

REFERENCE DATA

SREF =	5500.0000 SQ.FT.	XMRP =	1339.9000	IN.XC	
LREF =	327.7800 IN.	YMRP =	.0000	IN.YC	
BREF =	2348.0400 IN.	ZMRP =	190.8000	IN.ZC	
SCALE =	.0300				

PARAMETRIC DATA

ALPHAC =	.000	BETAC =	.000
ELV-IB =	.000	ELV-OB =	3.000
ELEVON =	5.000	MACH =	.600
BETAO =	.000	PHI =	.000
DX =	.000	DY =	.000

RN/L = 3.23 GRADIENT INTERVAL = -1.00/ 4.00

ALPHAO = 8.000

DZ	CN-C	CA-C	CLM-C	CY-C	CBL-C	CYN-C	CL-C	CD-C	CSL-C	CLN-C
.000	-.08092	.04686	.07769	-.00547	.00026	.00068	-.08422	.04797	.00028	.00065
3.000	-.07005	.04779	.06204	-.00567	.00039	.00093	-.07339	.04928	.00039	.00090
7.500	-.05696	.04816	.04882	-.00713	.00019	.00191	-.06032	.05010	.00023	.00188
15.000	-.03610	.04994	.00861	-.00763	.00004	.00242	-.03952	.05259	.00010	.00240
30.000	-.00455	.05057	-.04045	-.00844	-.00016	.00288	-.00798	.05429	-.00009	.00287
45.000	.01745	.05025	-.06414	-.00956	-.00045	.00343	.01403	.05471	-.00035	.00342
60.000	.05897	.04647	-.10319	-.01297	-.00090	.00488	.05572	.05225	-.00076	.00489
GRADIENT	.00362	.00031	-.00522	-.00007	.00004	.00008	.00361	.00044	.00004	.00008

CA20 747/1 01 S1 AT38 AT39 CARRIER DATA (5GN046) (26 NOV 75)

REFERENCE DATA

SREF =	5500.0000 SQ.FT.	XMRP =	1339.9000	IN.XC	
LREF =	327.7800 IN.	YMRP =	.0000	IN.YC	
BREF =	2348.0400 IN.	ZMRP =	190.8000	IN.ZC	
SCALE =	.0300				

PARAMETRIC DATA

ALPHAC =	4.000	BETAC =	.000
ELV-IB =	.000	ELV-OB =	3.000
ELEVON =	5.000	MACH =	.600
BETAO =	.000	PHI =	.000
DX =	.000	DY =	.000

RN/L = 3.33 GRADIENT INTERVAL = -1.00/ 4.00

ALPHAO = 12.000

DZ	CN-C	CA-C	CLM-C	CY-C	CBL-C	CYN-C	CL-C	CD-C	CSL-C	CLN-C
.000	.23129	.02488	-.00265	-.00405	.00040	.00014	.22605	.05159	.00036	.00009
3.000	.24056	.02526	-.00286	-.00463	.00025	.00064	.23523	.05290	.00026	.00060
7.500	.25835	.02643	-.02419	-.00553	.00006	.00123	.25282	.05565	.00013	.00121
15.000	.28826	.02768	-.06986	-.00684	-.00013	.00199	.28247	.06010	.00002	.00198
30.000	.33165	.02644	-.12040	-.00750	-.00060	.00274	.32578	.06321	-.00037	.00278
45.000	.36081	.02469	-.14940	-.00751	-.00063	.00268	.35500	.06433	-.00041	00272
60.000	.37784	.02359	-.16841	-.00733	-.00061	.00257	.37205	.06494	-.00040	.00261
GRADIENT	.00309	.00013	-.00007	-.00019	-.00005	.00017	.00306	.00044	-.00003	.00017

ORIGINAL PAGE IS OF POOR QUALITY

CA20 747/1 01 S1 AT38 AT39 CARRIER DATA (SGN047) (26 NOV 75)

REFERENCE DATA

SREF =	5500.0000 SQ.FT.	XMRP =	1339.9000 IN.XC
LREF =	327.7800 IN.	YMRP =	.0000 IN.YC
BREF =	2348.0400 IN.	ZMRP =	190.8000 IN.ZC
SCALE =	.0300		

PARAMETRIC DATA

ALPHAC =	8.000	BETAC =	.000
ELV-IB =	.000	ELV-OB =	3.000
ELEVON =	5.000	MACH =	.600
BETAO =	.000	PHI =	.000
DX =	.000	DY =	.000

RN/L = 3.25 GRADIENT INTERVAL = -1.00/ 4.00

ALPHAO = 16.000

DZ	CN-C	CA-C	CLM-C	CY-C	CBL-C	CYN-C	CL-C	CD-C	CSL-C	CLN-C
.000	.56923	-.01846	-.11354	-.00853	.00016	.00107	.56262	.08031	.00024	.00105
3.000	.58357	-.01792	-.11548	-.00839	-.00003	.00147	.57667	.08323	.00012	.00148
7.500	.60148	-.01579	-.12875	-.00763	-.00006	.00102	.59397	.08831	.00002	.00104
15.000	.63093	-.01624	-.15566	-.00974	-.00059	.00242	.62310	.09274	-.00027	.00251
30.000	.68178	-.01782	-.19618	-.01104	-.00108	.00336	.67352	.09961	-.00059	.00352
45.000	.71776	-.01925	-.21824	-.01061	-.00125	.00322	.70925	.10412	-.00078	.00341
60.000	.74029	-.01931	-.23084	-.01024	-.00139	.00269	.73148	.10778	-.00098	.00311
GRADIENT	.00478	.00018	-.00085	.00005	-.00006	.00013	.00468	.00097	-.00004	.00014

CA20 747/1 01 S1 AT38 AT39 CARRIER DATA (SGN048) (26 NOV 75)

REFERENCE DATA

SREF =	5500.0000 SQ.FT.	XMRP =	1339.9000 IN.XC
LREF =	327.7800 IN.	YMRP =	.0000 IN.YC
BREF =	2348.0400 IN.	ZMRP =	190.8000 IN.ZC
SCALE =	.0300		

PARAMETRIC DATA

ALPHAC =	4.000	BETAC =	-5.000
ELV-IB =	.000	ELV-OB =	3.000
ELEVON =	5.000	MACH =	.600
BETAO =	-5.000	PHI =	.000
DX =	.000	DY =	.000

RN/L = 3.34 GRADIENT INTERVAL = -1.00/ 4.00

ALPHAO = 12.000

DZ	CN-C	CA-C	CLM-C	CY-C	CBL-C	CYN-C	CL-C	CD-C	CSL-C	CLN-C
.000	.23603	.02254	-.00381	.07950	.00948	-.00845	.23099	.04942	.00841	-.00949
3.000	.25811	.02148	-.03198	.08801	.01152	-.01552	.25307	.05058	.00972	-.01673
7.500	.27808	.02198	-.06053	.08426	.01219	-.01590	.27389	.05319	.01034	-.01717
15.000	.30502	.02258	-.09831	.07977	.01232	-.01460	.29866	.05636	.01062	-.01590
30.000	.34269	.02124	-.13728	.07480	.01185	-.01264	.33749	.05880	.01035	-.01389
45.000	.36776	.01934	-.15966	.07775	.01260	-.01463	.36244	.05937	.01090	-.01595
60.000	.39386	.01757	-.17123	.07774	.01289	-.01508	.37865	.05918	.01114	-.01642
GRADIENT	.00736	-.00035	-.00939	.00284	.00068	-.00236	.00736	.00039	.00044	-.00241

CA20 747/1 01 S1 CARRIER DATA (SGN049) (26 NOV 75)

REFERENCE DATA

SREF = 5500.0000 SQ.FT. XMRP = 1339.9000 IN.XC
LREF = 327.7800 IN. YMRP = .0000 IN.YC
BREF = 2348.0400 IN. ZMRP = 190.8000 IN.ZC
SCALE = .0300

PARAMETRIC DATA

ALPHAC =	.000	BETAC =	.000
ELV-IB =	.000	ELV-OB =	3.000
ELEVON =	5.000	MACH =	.600
BETAO =	.000	PHI =	.000
DX =	.000	DY =	.000

RN/L = 3.24 GRADIENT INTERVAL = .00/ 12.00

ALPHAO = 6.000

DZ	CN-C	CA-C	CLM-C	CY-C	CBL-C	CYN-C	CL-C	CD-C	CSL-C	CLN-C
.000	-.02045	.04312	-.03203	-.00518	.00049	.00089	-.02366	.04635	.00050	.00086
3.000	-.01960	.04331	-.02434	-.00487	.00043	.00104	-.02282	.04656	.00044	.00101
7.500	-.01033	.04310	-.03724	-.00554	.00022	.00155	-.01355	.04668	.00024	.00153
15.000	.00567	.04317	-.06425	-.00693	-.00002	.00228	.00244	.04731	.00004	.00227
30.000	.03185	.04242	-.09992	-.00717	-.00042	.00287	.02863	.04747	-.00035	.00286
45.000	.05941	.03881	-.13796	-.01018	-.00200	.00274	.05630	.04982	-.00193	.00279
60.000	.09508	.00827	-.14190	-.02876	-.00794	-.00613	.09302	.01554	-.00818	-.00587
GRADIENT	.00140	-.00001	-.00087	-.00006	-.00004	.00009	.00140	.00004	-.00003	.00009

RN/L = 3.31 GRADIENT INTERVAL = .00/ 12.00

ALPHAO = 10.000

DZ	CN-C	CA-C	CLM-C	CY-C	CBL-C	CYN-C	CL-C	CD-C	CSL-C	CLN-C
.000	-.10995	.03661	.13767	-.00578	.00052	.00073	-.11288	.03672	.00052	.00070
3.000	-.10882	.03771	.11999	-.00583	.00047	.00094	-.10259	.03818	.00048	.00090
7.500	-.09506	.03833	.09742	-.00533	.00016	.00114	-.08807	.03930	.00018	.00111
15.000	-.06018	.04062	.03364	-.00679	.00013	.00211	-.05329	.04281	.00018	.00208
30.000	-.00950	.04188	-.03690	-.00766	-.00045	.00272	-.01267	.04549	-.00038	.00271
45.000	.01811	.04115	-.07023	-.00731	-.00043	.00263	.01494	.04572	-.00036	.00262
60.000	.04941	.03901	-.09234	-.00524	.00016	.00160	.04630	.04467	.00019	.00159
GRADIENT	.00331	.00022	-.00534	.00006	-.00005	.00005	.00330	.00034	-.00005	.00005

RN/L = 3.27 GRADIENT INTERVAL = .00/ 12.00

ALPHAO = 14.000

DZ	CN-C	CA-C	CLM-C	CY-C	CBL-C	CYN-C	CL-C	CD-C	CSL-C	CLN-C
.000	-.17822	.03539	.19578	-.00431	.00008	-.00007	-.18106	.03312	.00006	-.00009
3.000	-.17138	.03606	.19571	-.00413	.00015	.00009	-.17425	.03402	.00012	.00007
7.500	-.16021	.03678	.19300	-.00466	.00008	.00071	-.16311	.03513	.00008	.00069
15.000	-.12602	.03852	.14222	-.00489	.00003	.00112	-.12900	.03806	.00005	.00110
30.000	-.06070	.04083	.03135	-.00689	-.00021	.00238	-.06380	.04265	-.00015	.00237
45.000	-.02104	.04164	-.02594	-.00791	-.00048	.00307	-.02420	.04484	-.00040	.00307
60.000	.00271	.04179	-.05527	-.00914	-.00086	.00400	-.00047	.04592	-.00075	.00402
GRADIENT	.00241	.00018	-.00039	-.00005	-.00000	.00011	.00240	.00027	.00000	.00011

CA20 747/1 01 S1 CARRIER DATA (SGN050) (26 NOV 75)

REFERENCE DATA

SREF = 5500.0000 SQ.FT. XMRP = 1339.9000 IN.XC
LREF = 327.7900 IN. YMRP = .0000 IN.YC
BREF = 2348.0400 IN. ZMRP = 190.8000 IN.ZC
SCALE = .0300

PARAMETRIC DATA

ALPHAC = .000 BETAC = .000
ELV-IB = .000 ELV-OB = 3.000
ELEVON = 5.000 MACH = .600
BETAO = .000 PHI = .000
DX = 10.000 DY = .000

RN/L = 3.25 GRADIENT INTERVAL = .00/ 12.00

ALPHAO = 6.000

DZ	CN-C	CA-C	CLM-C	CY-C	CBL-C	CYN-C	CL-C	CD-C	CSL-C	CLN-C
.000	-.00722	.04192	-.05193	-.00480	.00038	.00070	-.01039	.04561	.00038	.00067
3.000	-.00633	.04223	-.04903	-.00428	.00031	.00080	-.00952	.04595	.00031	.00077
7.500	-.00014	.04243	-.05755	-.00619	.00005	.00182	-.00334	.04636	.00009	.00180
15.000	.01398	.04287	-.07992	-.00610	.00016	.00201	.01075	.04730	.00020	.00199
30.000	.03215	.04170	-.10329	-.00733	-.00021	.00264	.02896	.04676	-.00015	.00263
45.000	.01433	.04259	-.13917	-.03970	-.01120	.01522	.01111	.04703	-.01068	.01558
60.000	-.14373	.04820	-.15854	-.18818	-.05896	.07033	-.14704	.04712	-.05649	.07233
GRADIENT	.00098	.00007	-.00084	-.00020	-.00004	.00016	.00097	.00010	-.00004	.00016

RN/L = 3.25 GRADIENT INTERVAL = .00/ 12.00

ALPHAO = 10.000

DZ	CN-C	CA-C	CLM-C	CY-C	CBL-C	CYN-C	CL-C	CD-C	CSL-C	CLN-C
.000	-.07658	.03455	.10445	-.00352	.00067	-.00008	-.07946	.03582	.00064	-.00012
3.000	-.07374	.03615	.10203	-.00389	.00044	.00027	-.07667	.03752	.00043	.00024
7.500	-.06490	.03798	.08472	-.00502	.00022	.00107	-.06790	.03965	.00023	.00104
15.000	-.03874	.04025	.02462	-.00607	.00020	.00201	-.04183	.04284	.00024	.00198
30.000	-.00386	.04119	-.03996	-.00709	-.00018	.00278	-.00701	.04500	-.00011	.00277
45.000	.01488	.04099	-.07083	-.00985	-.00103	.00375	.01172	.04545	-.00092	.00377
60.000	.02522	.04081	-.09860	-.01754	-.00368	.00670	.02207	.04563	-.00346	.00681
GRADIENT	.00159	.00045	-.00273	-.00020	-.00006	.00016	.00157	.00051	-.00005	.00016

RN/L = 3.23 GRADIENT INTERVAL = .00/ 12.00

ALPHAO = 14.000

DZ	CN-C	CA-C	CLM-C	CY-C	CBL-C	CYN-C	CL-C	CD-C	CSL-C	CLN-C
.000	-.14460	.03039	.22591	-.00125	.00095	-.00081	-.14729	.02929	.00089	-.00085
3.000	-.13653	.03173	.20663	-.00267	.00070	-.00011	-.13927	.03091	.00067	-.00015
7.500	-.13010	.03484	.19151	-.00256	.00062	-.00006	-.13296	.03425	.00060	-.00010
15.000	-.10037	.03584	.12980	-.00483	.00036	.00139	-.10328	.03628	.00039	.00136
30.000	-.04719	.04067	.02622	-.00534	.00005	.00198	-.05030	.04296	.00010	.00196
45.000	-.01414	.04048	-.02481	-.00611	.00013	.00257	-.01726	.04392	.00020	.00254
60.000	.01202	.04047	-.05505	-.00242	.00149	.00122	.00689	.04483	.00150	.00115
GRADIENT	.00189	.00060	-.00449	-.00016	-.00004	.00009	.00187	.00067	-.00004	.00009

CA20 747/1 01 S1 CARRIER DATA (SGN051) (26 NOV 75)

REFERENCE DATA

SREF = 5500.0000 SQ.FT. XMRP = 1339.9000 IN.XC
LREF = 327.7800 IN. YMRP = .0000 IN.YC
BREF = 2348.0400 IN. ZMRP = 190.8000 IN.ZC
SCALE = .0300

PARAMETRIC DATA

ALPHAC =	.000	BETAC =	.000
ELV-IB =	.000	ELV-OB =	3.000
ELEVON =	5.000	MACH =	.600
BETAO =	.000	PHI =	.000
DX =	20.000	DY =	.000

RN/L = 3.24 GRADIENT INTERVAL = .00/ 12.00

ALPHAO = 6.000

DZ	CN-C	CA-C	CLM-C	CY-C	CBL-C	CYN-C	CL-C	CD-C	CSL-C	CLN-C
.000	.00234	.03990	-.06945	-.00514	-.00005	.00115	-.00077	.04392	-.00003	.00113
3.000	.00679	.04064	-.08150	-.00371	.00025	.00088	.00365	.04482	.00026	.00085
7.500	.01274	.04107	-.08964	-.00419	.00022	.00112	.00958	.04545	.00023	.00110
15.000	.02226	.04170	-.10170	-.00565	.00006	.00171	.01907	.04642	.00010	.00169
30.000	.03456	.04122	-.11127	-.00715	-.00057	.00243	.03139	.04637	-.00051	.00243
45.000	.07119	.04869	-.20480	-.00320	.00165	.00169	.06773	.05511	.00169	.00182
60.000	.17261	.07908	-.53703	.01613	.01198	-.00178	.16803	.08902	.01188	-.00221
GRADIENT	.00138	.00015	-.00262	.00011	.00003	.00000	.00139	.00020	.00003	.00000

RN/L = 3.25 GRADIENT INTERVAL = .00/ 12.00

ALPHAO = 10.000

DZ	CN-C	CA-C	CLM-C	CY-C	CBL-C	CYN-C	CL-C	CD-C	CSL-C	CLN-C
.000	-.05547	.03565	.08304	.00061	.00048	-.00041	-.05840	.03766	.00044	-.00044
3.000	-.05310	.03583	.08077	-.00272	.00041	.00033	-.05603	.03791	.00039	.00030
7.500	-.04414	.03707	.05942	-.00465	.00026	.00100	-.04712	.03947	.00027	.00097
15.000	-.02376	.03939	.00764	-.00475	.00007	.00147	-.02683	.04250	.00010	.00145
30.000	.00474	.04028	-.04665	-.00700	-.00024	.00275	.00161	.04439	-.00017	.00274
45.000	.02121	.04074	-.07591	-.00762	-.00048	.00300	.01806	.04542	-.00040	.00300
60.000	.03666	.04237	-.11402	-.00917	-.00098	.00373	.03344	.04758	-.00088	.00375
GRADIENT	.00155	.00020	-.00327	-.00068	-.00003	.00018	.00154	.00025	-.00002	.00019

RN/L = 3.28 GRADIENT INTERVAL = .00/ 12.00

ALPHAO = 14.000

DZ	CN-C	CA-C	CLM-C	CY-C	CBL-C	CYN-C	CL-C	CD-C	CSL-C	CLN-C
.000	-.10361	.04320	.11732	-.01199	-.00150	.00336	-.10677	.04352	-.00141	.00339
3.000	-.10670	.03547	.16870	-.00587	-.00020	.00140	-.10959	.03569	-.00018	.00139
7.500	-.10116	.03222	.18055	-.00190	.00057	.00015	-.10394	.03264	.00055	.00011
15.000	-.07456	.03583	.11043	-.00353	.00026	.00090	-.07748	.03717	.00027	.00087
30.000	-.03215	.03914	.01949	-.00554	-.00008	.00212	-.03521	.04196	-.00003	.00210
45.000	-.00709	.03963	-.02606	-.00643	-.00023	.00262	-.01018	.04332	-.00017	.00261
60.000	.00909	.03897	-.04447	-.00624	-.00029	.00253	.00601	.04323	-.00023	.00252
GRADIENT	.00040	-.00140	.00797	.00131	.00027	-.00042	.00045	-.00139	.00025	-.00043

DATE 26 NOV 75 TABULATED SOURCE DATA - CA20

CA20 747/1 01 S1 CARRIER DATA (5GN052) (26 NOV 75)

REFERENCE DATA

SREF =	5500.0000 SQ.FT.	XMRP =	1339.9000 IN.XC		
LREF =	327.7800 IN.	YMRP =	.0000 IN.YC		
BREF =	2348.0400 IN.	ZMRP =	190.8000 IN.ZC		
SCALE =	.0300				

PARAMETRIC DATA

ALPHAC =	4.000	BETAC =	.000
ELV-IB =	.000	ELV-CB =	3.000
ELEVON =	5.000	MACH =	.600
BETAO =	.000	PHI =	.000
DX =	.000	DY =	.000

RN/L = 3.22 GRADIENT INTERVAL = .00/ 12.00

ALPHAO = 8.000

DZ	CN-C	CA-C	CLM-C	CY-C	CBL-C	CYN-C	CL-C	CD-C	CSL-C	CLN-C
.000	.38912	.01932	-.21567	-.00727	.00013	.00140	.38343	.06310	.00023	.00137
3.000	.39286	.01839	-.21246	-.00752	-.00002	.00181	.38725	.06257	.00012	.00180
7.500	.39977	.01739	-.21397	-.00798	-.00017	.00230	.39423	.06229	.00002	.00230
15.000	.40910	.01615	-.21831	-.00859	-.00043	.00295	.40364	.06203	-.00017	.00297
30.000	.42743	.01301	-.21853	-.00922	-.00044	.00318	.42220	.06082	-.00016	.00320
45.000	.44653	.01062	-.22402	-.01037	-.00064	.00435	.44144	.06045	-.00024	.00439
60.000	.46929	.01273	-.30120	-.01215	-.00416	.00955	.46365	.06493	-.00319	.00993
GRADIENT	.00143	-.00026	.00018	-.00010	-.00004	.00012	.00145	-.00010	-.00003	.00012

RN/L = 3.24 GRADIENT INTERVAL = .00/ 12.00

ALPHAO = 10.000

DZ	CN-C	CA-C	CLM-C	CY-C	CBL-C	CYN-C	CL-C	CD-C	CSL-C	CLN-C
.000	.30728	.01792	-.08461	-.00477	.00044	.00009	.30219	.05315	.00040	.00003
3.000	.31654	.01765	-.09995	-.00541	.00026	.00067	.31342	.05406	.00027	.00063
7.500	.33395	.01728	-.12027	-.00631	.00001	.00147	.32879	.05530	.00011	.00145
15.000	.35659	.01641	-.15137	-.00697	-.00016	.00203	.35139	.05680	-.00000	.00203
30.000	.38746	.01439	-.18127	-.00824	-.00051	.00268	.38230	.05802	-.00028	.00271
45.000	.40779	.01274	-.19919	-.00856	-.00078	.00301	.40269	.05850	-.00051	.00307
60.000	.42862	.01137	-.22342	-.00901	-.00161	.00372	.42355	.05932	-.00127	.00386
GRADIENT	.00355	-.00009	-.00474	-.00020	-.00006	.00018	.00354	.00029	-.00004	.00019

RN/L = 3.24 GRADIENT INTERVAL = .00/ 12.00

ALPHAO = 14.000

DZ	CN-C	CA-C	CLM-C	CY-C	CBL-C	CYN-C	CL-C	CD-C	CSL-C	CLN-C
.000	.22770	.01535	.01983	-.00485	.00068	-.00028	.22331	.04227	.00059	-.00036
3.000	.23761	.01533	.00877	-.00604	.00027	.00069	.23317	.04329	.00029	.00065
7.500	.25590	.01630	-.01480	-.00665	.00002	.00138	.25116	.04616	.00012	.00136
15.000	.29239	.01759	-.07045	-.00692	-.00009	.00167	.28742	.05127	.00003	.00167
30.000	.34265	.01621	-.13266	-.00851	-.00063	.00282	.33755	.05515	-.00038	.00285
45.000	.37373	.01412	-.16247	-.00845	-.00056	.00285	.36868	.05632	-.00031	.00289
60.000	.39488	.01233	-.17504	-.00847	-.00019	.00266	.38990	.05674	.00004	.00266
GRADIENT	.00377	.00013	-.00467	-.00026	-.00008	.00022	.00374	.00053	-.00006	.00022

CA20 747/1 01 SI CARRIER DATA (SGN053) (26 NOV 75)

REFERENCE DATA

SREF = 5500.0000 SQ.FT. XMRP = 1339.9000 IN.XC
LREF = 327.7800 IN. YMRP = .0000 IN.YC
BREF = 2348.0400 IN. ZMRP = 190.8000 IN.ZC
SCALE = .0300

PARAMETRIC DATA

ALPHAC = 4.000 BETAC = .000
ELV-IB = .000 ELV-OB = 3.000
ELEVON = 5.000 MACH = .600
BETAO = .000 PH = .000
DX = 10.000 DY = .000

ORIGINAL PAGE IS OF POOR QUALITY

RN/L = 3.27 GRADIENT INTERVAL = .00/ 12.00

ALPHAO = 6.000

DZ	CN-C	CA-C	CLM-C	CY-C	CBL-C	CYN-C	CL-C	CD-C	CSL-C	CLN-C
.000	.39881	.01737	-.23158	-.00624	-.00007	.00111	.39328	.06217	-.00000	.00110
3.000	.40079	.01692	-.22621	-.00690	-.00013	.00168	.39529	.06193	-.00000	.00168
7.500	.40548	.01625	-.22588	-.00761	-.00027	.00221	.40003	.06176	-.00009	.00222
15.000	.41390	.01507	-.22868	-.00788	-.00045	.00245	.40852	.06146	-.00024	.00248
30.000	.43075	.01284	-.23453	-.00811	-.00076	.00275	.42552	.06100	-.00052	.00281
45.000	.45274	.01409	-.32451	-.00672	-.00509	.00494	.44725	.06455	-.00460	.00544
60.000	.46689	.02274	-.59423	.00008	-.01739	.01054	.48031	.07672	-.01624	.01229
GRADIENT	.00090	-.00015	.00071	-.00018	-.00003	.00014	.00091	-.00005	-.00001	.00015

RN/L = 3.23 GRADIENT INTERVAL = .00/ 12.00

ALPHAO = 10.000

DZ	CN-C	CA-C	CLM-C	CY-C	CBL-C	CYN-C	CL-C	CD-C	CSL-C	CLN-C
.000	.33792	.01494	-.10889	-.00730	.00015	.00087	.33297	.05339	.00019	.00084
3.000	.34008	.01541	-.10651	-.00817	-.00009	.00162	.33508	.05408	.00003	.00161
7.500	.35179	.01538	-.12909	-.00922	-.00039	.00251	.34672	.05527	-.00018	.00253
15.000	.36968	.01499	-.15598	-.00957	-.00071	.00300	.36455	.05576	-.00045	.00305
30.000	.39597	.01318	-..8574	-.01023	-.00081	.00334	.39089	.05771	-.00051	.00340
45.000	.41356	.01200	-.20504	-.00978	-.00115	.00346	.40851	.05838	-.00083	.00355
60.000	.42927	.01143	-.23244	-.00963	-.00202	.00379	.42419	.05945	-.00165	.00397
GRADIENT	.00191	.00005	-.00288	-.00025	-.00007	.00022	.00189	.00025	-.00005	.00022

RN/L = 3.23 GRADIENT INTERVAL = .00/ 12.00

ALPHAO = 14.000

DZ	CN-C	CA-C	CLM-C	CY-C	CBL-C	CYN-C	CL-C	CD-C	CSL-C	CLN-C
.000	.26898	.00977	.02663	-.00576	.00059	-.00006	.26495	.04105	.00053	-.00013
3.000	.27159	.01088	.02515	-.00769	.00007	.00117	.26743	.04242	.00014	.00115
7.500	.28551	.01290	-.00390	-.00866	-.00025	.00210	.28106	.04588	-.00008	.00210
15.000	.31517	.01463	-.06703	-.00961	-.00051	.00294	.31038	.05070	-.00026	.00297
30.000	.35650	.01398	-.13261	-.01054	-.00088	.00352	.35155	.05438	-.00055	.00359
45.000	.38289	.01254	-.16139	-.00976	-.00070	.00327	.37804	.05572	-.00041	.00332
60.000	.40017	.01134	-.17259	-.00967	-.00032	.00304	.39526	.05631	-.00006	.00304
GRADIENT	.00227	.00042	-.00426	-.00037	-.00011	.00028	.00222	.00065	-.00008	.00029

CA20 747/1 01 S1 CARRIER DATA (SGN054) (26 NOV 75)

REFERENCE DATA

SREF =	5500.0000 SQ.FT.	XMRP =	1339.9000 IN.XC		
LREF =	327.7800 IN.	YMRP =	.0000 IN.YC		
BREF =	2348.0400 IN.	ZMRP =	190.8000 IN.ZC		
SCALE =	.0300				

PARAMETRIC DATA

ALPHAC =	4.000	BETAC =	.000
ELV-IB =	.000	ELV-OB =	3.000
ELEVON =	5.000	MACH =	.600
BETAO =	.000	PHI =	.000
DX =	20.000	DY =	.000

RN/L = 3.25 GRADIENT INTERVAL = .00/ 12.00

ALPHAO = 6.000

DZ	CN-C	CA-C	CLM-C	CY-C	CBL-C	CYN-C	CL-C	CD-C	CSL-C	CLN-C
.000	.40726	.01511	-.25713	-.00609	-.00004	.00091	.40191	.06080	.00000	.00090
3.000	.40868	.01498	-.25235	-.00655	-.00014	.00132	.40354	.06085	-.00006	.00132
7.500	.41208	.01475	-.24833	-.00698	-.00027	.00174	.40674	.06095	-.00014	.00175
15.000	.41809	.01409	-.24590	-.00724	-.00037	.00209	.41279	.06093	-.00020	.00211
30.000	.43002	.01206	-.23777	-.00826	-.00061	.00258	.42487	.06015	-.00039	.00262
45.000	.44066	.01123	-.24336	-.00937	-.00156	.00400	.43554	.06044	-.00119	.00413
60.000	.44614	.01490	-.27867	-.01047	-.00277	.00685	.44060	.06466	-.00188	.00908
GRADIENT	.00065	-.00005	.00115	-.00012	-.00003	.00011	.00065	.00002	-.00002	.00011

RN/L = 3.27 GRADIENT INTERVAL = .00/ 12.00

ALPHAO = 10.000

DZ	CN-C	CA-C	CLM-C	CY-C	CBL-C	CYN-C	CL-C	CD-C	CSL-C	CLN-C
.000	.35553	.01233	-.10866	-.00827	-.00011	.00171	.35076	.05263	.00002	.00171
3.000	.36084	.01268	-.12022	-.00868	-.00030	.00213	.35600	.05354	-.00013	.00214
7.500	.36965	.01318	-.14408	-.00981	-.00070	.00275	.36471	.05496	-.00046	.00280
15.000	.38324	.01334	-.16437	-.01067	-.00079	.00330	.37822	.05653	-.00050	.00335
30.000	.40409	.01202	-.19027	-.01026	-.00105	.00341	.39909	.05740	-.00074	.00349
45.000	.41826	.01087	-.19931	-.00975	-.00082	.00334	.41330	.05774	-.00052	.00340
60.000	.43090	.00999	-.20269	-.00856	-.00007	.00321	.42596	.05818	.00022	.00319
GRADIENT	.00189	.00011	-.00477	-.00021	-.00008	.00014	.00187	.00031	-.00007	.00015

RN/L = 3.27 GRADIENT INTERVAL = .00/ 12.00

ALPHAO = 14.000

DZ	CN-C	CA-C	CLM-C	CY-C	CBL-C	CYN-C	CL-C	CD-C	CSL-C	CLN-C
.000	.28943	.00912	.04492	-.00789	-.00015	.00124	.26535	.04254	-.00007	.00124
3.000	.29758	.00941	.03088	-.00765	.00005	.00153	.29343	.04367	.00016	.00151
7.500	.31320	.01068	-.01172	-.00879	-.00031	.00224	.30883	.04657	-.00012	.00225
15.000	.33678	.01241	-.06999	-.01016	-.00068	.00323	.33210	.05076	-.00039	.00327
30.000	.36980	.01234	-.13212	-.01032	-.00107	.00354	.36505	.05415	-.00075	.00352
45.000	.39044	.01169	-.16129	-.01020	-.00116	.00360	.36554	.05565	-.00083	.00369
60.000	.40721	.01103	-.18368	-.00956	-.00133	.00319	.40229	.05674	-.00104	.00331
GRADIENT	.00319	.00021	-.00770	-.00013	-.00003	.00013	.00315	.00055	-.00001	.00014

DATE 26 NOV 75 TABULATED SOURCE DATA - CA20

CA20 747/1 01 S1 CARRIER DATA (SGN055) (26 NOV 75)

REFERENCE DATA

SREF =	5500.0000 SQ.FT.	XMRP =	1339.9000 IN.XC		
LREF =	327.7800 IN.	YMRP =	.0000 IN.YC		
BREF =	2348.0400 IN.	ZMRP =	190.8000 IN.ZC		
SCALE =	.0300				

PARAMETRIC DATA

ALPHAC =	8.000	BETAC =	.000
ELV-IB =	.000	ELV-OB =	3.000
ELEVON =	5.000	MACH =	.600
BETAO =	.000	PHI =	.000
DX =	.000	DY =	.000

RN/L = 3.22 GRADIENT INTERVAL = .00/ 12.00

ALPHAO = 6.000

DZ	CN-C	CA-C	CLM-C	CY-C	CBL-C	CYN-C	CL-C	CD-C	CSL-C	CLN-C
.000	.82454	-.02689	-.33039	-.01004	-.00107	.00189	.81504	.11865	-.00083	.00208
3.000	.81972	-.02763	-.31917	-.00936	-.00111	.00222	.81042	.11708	-.00081	.00241
7.500	.81927	-.02761	-.30830	-.00984	-.00127	.00258	.80999	.11703	-.00090	.00279
15.000	.82204	-.02905	-.29530	-.01068	-.00144	.00311	.81256	.11609	-.00098	.00334
30.000	.82678	-.02992	-.27879	-.00986	-.00150	.00318	.81777	.11606	-.00103	.00341
45.000	.84463	-.03018	-.20722	-.00973	-.00081	.00404	.83539	.11690	-.00020	.00415
60.000	.86745	-.02495	.09034	-.01153	.00707	.00764	.85697	.12801	.00819	.00632
GRADIENT	-.00065	-.00009	.00290	.00002	-.00003	.00009	-.00063	-.00020	-.00001	.00009

RN/L = 3.25 GRADIENT INTERVAL = .00/ 12.00

ALPHAO = 10.000

DZ	CN-C	CA-C	CLM-C	CY-C	CBL-C	CYN-C	CL-C	CD-C	CSL-C	CLN-C
.000	.75827	-.02748	-.27819	-.00800	-.00034	.00095	.74988	.10656	-.00027	.00103
3.000	.76167	-.02800	-.27327	-.00886	-.00058	.00177	.75332	.10663	-.00037	.00187
7.500	.76971	-.02883	-.27170	-.01037	-.00081	.00270	.76040	.10704	-.00044	.00283
15.000	.77882	-.03000	-.26842	-.01074	-.00089	.00322	.77055	.10765	-.00042	.00335
30.000	.79819	-.03100	-.26574	-.01080	-.00092	.00348	.78980	.11003	-.00041	.00361
45.000	.81178	-.03137	-.25926	-.01035	-.00058	.00337	.80326	.11202	-.00009	.00344
60.000	.82311	-.03079	-.24345	-.00967	.00013	.00333	.81431	.11456	.00061	.00329
GRADIENT	.00141	-.00018	.00082	-.00032	-.00006	.00023	.00142	.00007	-.00002	.00024

RN/L = 3.27 GRADIENT INTERVAL = .00/ 12.00

ALPHAO = 14.000

DZ	CN-C	CA-C	CLM-C	CY-C	CBL-C	CYN-C	CL-C	CD-C	CSL-C	CLN-C
.000	.67549	-.02771	-.17420	-.00862	.00019	.00083	.66940	.09196	.00023	.00081
3.000	.68345	-.02754	-.17508	-.00959	-.00006	.00156	.67621	.09351	.00011	.00158
7.500	.70082	-.02842	-.19802	-.01015	-.00022	.00238	.69348	.09566	.00009	.00241
15.000	.72436	-.02979	-.21863	-.01155	-.00067	.00343	.71669	.09840	-.00016	.00352
30.000	.75942	-.03134	-.23998	-.01197	-.00095	.00390	.75168	.10296	-.00036	.00403
45.000	.78322	-.03189	-.24693	-.01104	-.00076	.00360	.77522	.10655	-.00023	.00370
60.000	.80148	-.03195	-.25828	-.01099	-.00100	.00336	.79321	.10986	-.00050	.00351
GRADIENT	.00342	-.00018	-.00333	-.00020	-.00005	.00020	.00338	.00049	-.00002	.00021

CA20 747/1 01 SI CARRIER DATA (SGN056) (26 NOV 75)

REFERENCE DATA

SREF = 5500.0000 SQ.FT. XMRP = 1339.9000 IN.XC
LREF = 327.7800 IN. YMRP = .0000 IN.YC
BREF = 2348.0400 IN. ZMRP = 190.8000 IN.ZC
SCALE = .0300

PARAMETRIC DATA

ALPHAC = 8.000 BETAC = .000
ELV-IB = .000 ELV-OB = 3.000
ELEVON = 5.000 MACH = .600
BETAO = .000 PHI = .000
DX = 10.000 DY = .000

RN/L = 3.30 GRADIENT INTERVAL = .00/ 12.00

ALPHAO = 6.000

DZ	CN-C	CA-C	CLM-C	CY-C	CBL-C	CYN-C	CL-C	CD-C	CSL-C	CLN-C
.000	.82153	-.02862	-.35265	-.00814	-.00077	.00138	.81238	.11642	-.00062	.00152
3.000	.81915	-.02909	-.34160	-.00840	-.00100	.00192	.81012	.11555	-.00075	.00209
7.500	.81908	-.02948	-.32624	-.00938	-.00131	.00259	.81011	.11515	-.00094	.00281
15.000	.82107	-.02986	-.30945	-.00998	-.00138	.00301	.81214	.11513	-.00094	.00323
30.000	.82558	-.03089	-.28566	-.01030	-.00153	.00325	.81676	.11489	-.00105	.00349
45.000	.82070	-.03037	-.23282	-.01181	-.00032	.00422	.81186	.11456	.00031	.00424
60.000	.79070	-.02438	-.08622	-.01633	.00441	.00793	.78128	.11524	.00562	.00707
GRADIENT	-.00030	-.00011	.00351	-.00017	-.00007	.00016	-.00028	-.00016	-.00004	.00017

RN/L = 3.24 GRADIENT INTERVAL = .00/ 12.00

ALPHAO = 10.000

DZ	CN-C	CA-C	CLM-C	CY-C	CBL-C	CYN-C	CL-C	CD-C	CSL-C	CLN-C
.000	.77697	-.02849	-.28683	-.00897	.00017	.00150	.76848	.10981	.00032	.00147
3.000	.77826	-.02897	-.28007	-.00994	-.00011	.00233	.76982	.10856	.00020	.00234
7.500	.78225	-.02973	-.27424	-.01094	-.00040	.00313	.77388	.10851	.00004	.00318
15.000	.79004	-.03019	-.27212	-.01108	-.00053	.00336	.78164	.10941	-.00004	.00343
30.000	.80433	-.03116	-.26831	-.01173	-.00069	.00372	.79589	.11093	-.00014	.00381
45.000	.81513	-.03127	-.25913	-.01101	-.00057	.00361	.80653	.11270	-.00004	.00369
60.000	.82185	-.03121	-.24386	-.00996	-.00051	.00338	.81314	.11393	-.00002	.00344
GRADIENT	.00072	-.00017	.00165	-.00026	-.00008	.00021	.00074	-.00004	-.00004	.00022

RN/L = 3.23 GRADIENT INTERVAL = .00/ 12.00

ALPHAO = 14.000

DZ	CN-C	CA-C	CLM-C	CY-C	CBL-C	CYN-C	CL-C	CD-C	CSL-C	CLN-C
.000	.71369	-.02932	-.16816	-.01016	.00028	.00157	.70630	.09700	.00044	.00152
3.000	.71920	-.02934	-.17550	-.01081	.00006	.00229	.71172	.09795	.00036	.00227
7.500	.72984	-.02993	-.19231	-.01146	-.00021	.00298	.72231	.09921	.00020	.00300
15.000	.74609	-.03076	-.21025	-.01234	-.00059	.00375	.73846	.10121	-.00004	.00382
30.000	.77147	-.03183	-.23396	-.01267	-.00085	.00408	.76364	.10457	-.00023	.00419
45.000	.79005	-.03224	-.24023	-.01173	-.00074	.00393	.78201	.10739	-.00015	.00402
60.000	.80143	-.03220	-.24551	-.01118	-.00073	.00368	.79320	.10941	-.00018	.00378
GRADIENT	.00217	-.00009	-.00326	-.00017	-.00007	.00019	.00215	.00029	-.00003	.00019

CA20 747/1 OI S1 CARRIER DATA (5GN057) (26 NOV 75)

REFERENCE DATA

SREF = 5500.0000 SQ.FT. XMRP = 1339.9000 IN.XC
LREF = 327.7800 IN. YMRP = .0000 IN.YC
BREF = 2348.0400 IN. ZMRP = 190.8000 IN.ZC
SCALE = .0300

PARAMETRIC DATA

ALPHAC = 8.000 BETAC = .000
ELV-IB = .000 ELV-OB = 3.000
ELEVON = 5.000 MACH = .600
BETAO = .000 PHI = .000
DX = 20.000 DY = .000

ORIGINAL PAGE IS OF POOR QUALITY

RN/L = 3.24 GRADIENT INTERVAL = .00/ 12.00

ALPHAO = 6.000

DZ	CN-C	CA-C	CLM-C	CY-C	CBL-C	CYN-C	CL-C	CD-C	CSL-C	CLN-C
.000	.81975	-.03093	-.38098	-.00770	-.00082	.00104	.81102	.11384	-.00073	.00120
3.000	.81749	-.03093	-.36477	-.00836	-.00103	.00160	.80880	.11345	-.00084	.00178
7.500	.81712	-.03081	-.34609	-.00910	-.00117	.00215	.80841	.11350	-.00085	.00234
15.000	.81919	-.03060	-.32529	-.00944	-.00123	.00262	.81042	.11407	-.00086	.00282
30.000	.82097	-.03056	-.29025	-.01061	-.00129	.00325	.81216	.11442	-.00081	.00345
45.000	.82918	-.03056	-.25069	-.01167	-.00202	.00396	.82024	.11584	-.00141	.00428
60.000	.88274	-.03350	-.24461	-.00976	-.00870	.00405	.87350	.12224	-.00795	.00552
GRADIENT	-.00033	.00002	.00461	-.00018	-.00005	.00014	-.00033	-.00004	-.00002	.00015

RN/L = 3.27 GRADIENT INTERVAL = .00/ 12.00

ALPHAO = 10.000

DZ	CN-C	CA-C	CLM-C	CY-C	CBL-C	CYN-C	CL-C	CD-C	CSL-C	CLN-C
.000	.78785	-.03153	-.29984	-.01000	-.00027	.00188	.77972	.10771	-.00004	.00193
3.000	.78831	-.03133	-.29177	-.01122	-.00058	.00274	.78013	.10799	-.00019	.00283
7.500	.79250	-.03138	-.28512	-.01156	-.00085	.00325	.78427	.10867	-.00038	.00338
15.000	.79576	-.03141	-.27516	-.01263	-.00109	.00376	.78749	.10920	-.00052	.00392
30.000	.80792	-.03196	-.26836	-.01242	-.00104	.00364	.79955	.11077	-.00046	.00399
45.000	.81743	-.03129	-.25606	-.01175	-.00113	.00393	.80880	.11308	-.00053	.00410
60.000	.82153	-.03183	-.24559	-.01024	-.00150	.00342	.81294	.11326	-.00099	.00365
GRADIENT	.00064	.00002	.00192	-.00020	-.00008	.00018	.00063	.00013	-.00004	.00019

RN/L = 3.29 GRADIENT INTERVAL = .00/ 12.00

ALPHAO = 14.000

DZ	CN-C	CA-C	CLM-C	CY-C	CBL-C	CYN-C	CL-C	CD-C	CSL-C	CLN-C
.000	.73547	-.03137	-.16794	-.00979	-.00014	.00170	.72811	.09877	.00006	.00172
3.000	.73958	-.03165	-.17736	-.01123	-.00044	.00268	.73219	.09921	-.00007	.00274
7.500	.74657	-.03150	-.19043	-.01213	-.00056	.00352	.73906	.10057	-.00004	.00359
15.000	.76024	-.03212	-.20831	-.01278	-.00074	.00400	.75263	.10233	-.00013	.00409
30.000	.78088	-.03288	-.22682	-.01317	-.00107	.00426	.77309	.10517	-.00042	.00441
45.000	.79537	-.03287	-.23348	-.01250	-.00087	.00428	.78735	.10769	-.00022	.00439
60.000	.80224	-.03247	-.23119	-.01163	-.00043	.00406	.79405	.10928	.00017	.00410
GRADIENT	.00149	-.00001	-.00299	-.00030	-.00005	.00024	.00146	.00025	-.00001	.00024

CA20 747/1 01 S1 CARRIER DATA (5GN058) (26 NOV 75)

REFERENCE DATA

SREF =	5500.0000 SQ.FT.	XMRP =	1339.9000	IN.XC	
LREF =	327.7800 IN.	YMRP =	.0000	IN.YC	
BREF =	2348.0400 IN.	ZMRP =	190.8000	IN.ZC	
SCALE =	.0300				

PARAMETRIC DATA

ALPHAC =	4.000	BETAC =	.000
ELV-IB =	.000	ELV-OB =	3.000
ELEVON =	5.000	MACH =	.600
BETAO =	.000	PHI =	.000
DX =	.000	DY =	10.000

RN/L = 3.34 GRADIENT INTERVAL = .00/ 12.00

ALPHAO = 10.000

DZ	CN-C	CA-C	CLM-C	CY-C	CBL-C	CYN-C	CL-C	CD-C	CSL-C	CLN-C
.000	.32806	.01937	-.13367	-.01459	.00831	-.00417	.32271	.05676	.00778	-.00503
3.000	.33682	.01900	-.13715	-.01566	.00649	-.00165	.33145	.05731	.00623	-.00233
7.500	.35135	.01830	-.15334	-.01831	.00470	.00140	.34598	.05813	.00477	.00089
15.000	.36884	.01711	-.16942	-.01870	.00311	.00352	.36350	.05878	.00340	.00316
30.000	.39680	.01473	-.19531	-.02005	.00095	.00656	.39155	.05934	.00158	.00642
45.000	.41544	.01305	-.20717	-.01684	-.00012	.00614	.41026	.05962	.00047	.00611
60.000	.43296	.01149	-.21935	-.01335	-.00126	.00555	.42785	.05990	-.00072	.00564
GRADIENT	.00311	-.00014	-.00270	-.00050	-.00047	.00074	.00311	.00018	-.00039	.00078

RN/L = 3.24 GRADIENT INTERVAL = .00/ 12.00

ALPHAO = 14.000

DZ	CN-C	CA-C	CLM-C	CY-C	CBL-C	CYN-C	CL-C	CD-C	CSL-C	CLN-C
.000	.23939	.01713	-.00134	-.02377	.01481	-.00831	.23475	.04526	.01380	-.00982
3.000	.25167	.01794	-.02115	-.02073	.01288	-.00604	.24688	.04735	.01212	-.00736
7.500	.27211	.01848	-.04995	-.02316	.00949	-.00069	.26716	.05004	.00931	-.00169
15.000	.30461	.01802	-.09505	-.02710	.00547	.00504	.29952	.05297	.00591	.00444
30.000	.35165	.01622	-.14983	-.02839	.00146	.00960	.34650	.05610	.00240	.00939
45.000	.37997	.01453	-.17665	-.02327	.00011	.00868	.37484	.05738	.00097	.00861
60.000	.39991	.01329	-.19237	-.01765	-.00038	.00663	.39479	.05823	.00027	.00662
GRADIENT	.00438	.00018	-.00647	.00003	-.00071	.00103	.00434	.00063	-.00060	.00110

CA20 747/1 01 S1 CARRIER DATA (5GN059) (26 NOV 75)

REFERENCE DATA

SREF = 5500.0000 SQ.FT. XMRP = 1339.9000 IN.XC
LREF = 327.7800 IN. YMRP = .0000 IN.YC
BREF = 2348.0400 IN. ZMRP = 190.8000 IN.ZC
SCALE = .0300

PARAMETRIC DATA

ALPHAC =	4.000	BETAC =	.000
ELV-IB =	.000	ELV-OB =	3.000
ELEVON =	5.000	MACH =	.600
BETAO =	.000	PHI =	.000
DX =	10.000	DY =	10.000

RN/L = 3.32 GRADIENT INTERVAL = .00/ 12.00

ALPHAO = 10.000

DZ	CN-C	CA-C	CLM-C	CY-C	CBL-C	CYN-C	CL-C	CD-C	CSL-C	CLN-C
.000	.34785	.01638	-.13932	-.01053	.00686	-.00458	.34269	.05586	.00629	-.00528
3.000	.35308	.01654	-.14172	-.01185	.00551	-.00234	.34789	.05657	.00518	-.00291
7.500	.36595	.01576	-.15757	-.01450	.00403	.00048	.36076	.05714	.00400	.00005
15.000	.37986	.01535	-.17405	-.01594	.00270	.00278	.37464	.05818	.00293	.00247
30.000	.40307	.01346	-.19389	-.01895	.00046	.00628	.39792	.05873	.00106	.00619
45.000	.41866	.01212	-.21003	-.01650	-.00047	.00599	.41356	.05903	.00011	.00600
60.000	.43213	.01100	-.22778	-.01382	-.00140	.00547	.42708	.05932	-.00087	.00558
GRADIENT	.00245	-.00009	-.00252	-.00053	-.00037	.00067	.00244	.00017	-.00030	.00071

RN/L = 3.25 GRADIENT INTERVAL = .00/ 12.00

ALPHAO = 14.000

DZ	CN-C	CA-C	CLM-C	CY-C	CBL-C	CYN-C	CL-C	CD-C	CSL-C	CLN-C
.000	.28366	.01234	-.02003	-.01131	.01274	-.01001	.27928	.04513	.01157	-.01129
3.000	.28897	.01351	-.02973	-.01235	.01047	-.00656	.28443	.04685	.00987	-.00762
7.500	.30338	.01489	-.05502	-.02062	.00735	.00026	.29862	.04973	.00729	-.00052
15.000	.32752	.01531	-.09798	-.02538	.00414	.00559	.32260	.05268	.00465	.00512
30.000	.36527	.01388	-.15184	-.02725	.00068	.00947	.36028	.05520	.00162	.00934
45.000	.38880	.01292	-.17631	-.02256	-.00037	.00850	.38379	.05670	.00047	.00849
60.000	.40594	.01205	-.19424	-.01676	-.00076	.00625	.40092	.05762	-.00015	.00628
GRADIENT	.00267	.00034	-.00474	-.00129	-.00072	.00138	.00262	.00062	-.00057	.00145

CA20 747/1 01 S1 CARRIER DATA (SGN060) (26 NOV 75)

REFERENCE DATA

SREF =	5500.0000 SQ.FT.	XMRP =	1339.9000	IN.XC	
LREF =	327.7800 IN.	YMRP =	.0000	IN.YC	
BREF =	2348.0400 IN.	ZMRP =	190.8000	IN.ZC	
SCALE =	.0300				

PARAMETRIC DATA

ALPHAC =	8.000	BETAC =	.000
ELV-IB =	.000	ELV-OB =	3.000
ELEVON =	5.000	MACH =	.600
BETAO =	.000	PHI =	.000
DX =	.000	DY =	10.000

RN/L = 3.23 GRADIENT INTERVAL = .00/ 12.00

ALPHAO = 10.000

DZ	CN-C	CA-C	CLM-C	CY-C	CBL-C	CYN-C	CL-C	CD-C	CSL-C	CLN-C
.000	.76400	-.02869	-.27504	-.02165	.00237	-.00099	.75574	.10636	.00206	-.00136
3.000	.76788	-.02963	-.27610	-.02125	.00185	.00076	.75972	.10611	.00185	.00045
7.500	.77401	-.03047	-.27975	-.02013	.00136	.00206	.76590	.10635	.00159	.00182
15.000	.78714	-.03210	-.27834	-.02118	.00027	.00482	.77912	.10702	.00100	.00473
30.000	.80261	-.03296	-.27654	-.02249	-.00136	.00743	.79450	.10886	-.00015	.00758
45.000	.81558	-.03316	-.27000	-.01648	-.00111	.00535	.80731	.11092	-.00027	.00549
60.000	.82843	-.03291	-.26021	-.00993	-.00080	.00306	.81992	.11340	-.00036	.00318
GRADIENT	.00134	-.00023	-.00064	.00021	-.00013	.00040	.00136	.00000	-.00006	.00041

RN/L = 3.20 GRADIENT INTERVAL = .00/ 12.00

ALPHAO = 14.000

DZ	CN-C	CA-C	CLM-C	CY-C	CBL-C	CYN-C	CL-C	CD-C	CSL-C	CLN-C
.000	.68629	-.02837	-.19079	-.02534	.00942	-.00558	.67915	.09319	.00821	-.00711
3.000	.69472	-.02880	-.20105	-.02898	.00698	-.00016	.68752	.09422	.00664	-.00133
7.500	.71195	-.03031	-.21691	-.03191	.00478	.00476	.70476	.09573	.00544	.00328
15.000	.72492	-.03046	-.23434	-.03261	.00225	.00837	.71756	.09783	.00357	.00788
30.000	.76811	-.03374	-.25427	-.02873	-.00004	.00967	.76066	.10210	.00154	.00956
45.000	.78864	-.03380	-.25737	-.02249	-.00082	.00791	.78088	.10561	.00046	.00796
60.000	.80276	-.03325	-.25881	-.01653	-.00073	.00546	.79470	.10860	.00012	.00553
GRADIENT	.00345	-.00027	-.00349	-.00086	-.00061	.00136	.00345	.00034	-.00036	.00144

CA20 747/1 01 S1 CARRIER DATA (5GN081) (26 NOV 75)

REFERENCE DATA

SREF =	5500.0000 SQ.FT.	XMRP =	1339.9000 IN.XC		
LREF =	327.7800 IN.	YMRP =	.0000 IN.YC		
BREF =	2348.0400 IN.	ZMRP =	190.8000 IN.ZC		
SCALE =	.0300				

PARAMETRIC DATA

ALPHAC =	8.000	BETAC =	.000
ELV-IB =	.000	ELV-OB =	3.000
ELEVON =	5.000	MACH =	.600
BETAO =	.000	PHI =	.000
DX =	10.000	DY =	10.000

RN/L = 3.28 GRADIENT INTERVAL = .00/ 12.00

ALPHAO = 10.000

DZ	CN-C	CA-C	CLM-C	CY-C	CBL-C	CYN-C	CL-C	CD-C	CSL-C	CLN-C
.000	.78266	-.03043	-.28405	-.01635	.00241	-.00174	.77441	.10789	.00196	-.00211
3.000	.78514	-.03082	-.28233	-.01661	.00206	-.00029	.77692	.10793	.00187	-.00062
7.500	.79023	-.03141	-.28157	-.01677	.00151	.00136	.78204	.10824	.00163	.00110
15.000	.79768	-.03247	-.28367	-.01752	.00055	.00370	.78956	.10849	.00108	.00358
30.000	.81162	-.03325	-.27860	-.02031	-.00075	.00651	.80342	.11014	.00029	.00657
45.000	.82256	-.03227	-.26779	-.01518	-.00075	.00476	.81402	.11301	-.00002	.00484
60.000	.83759	-.03126	-.25233	-.01071	-.00097	.00376	.82865	.11661	-.00041	.00390
GRADIENT	.00102	-.00013	.00032	-.00005	-.00012	.00041	.00103	.00005	-.00005	.00042

RN/L = 3.26 GRADIENT INTERVAL = .00/ 12.00

ALPHAO = 14.000

DZ	CN-C	CA-C	CLM-C	CY-C	CBL-C	CYN-C	CL-C	CD-C	CSL-C	CLN-C
.000	.72502	-.03097	-.18801	-.02143	.00647	-.00368	.71774	.09735	.00563	-.00473
3.000	.73018	-.03106	-.19557	-.02489	.00490	.00054	.72284	.09816	.00482	-.00029
7.500	.73989	-.03199	-.21145	-.02814	.00344	.00449	.73256	.09893	.00406	.00385
15.000	.76217	-.03377	-.23190	-.03086	.00124	.00833	.75481	.10104	.00257	.00802
30.000	.77986	-.03340	-.24872	-.02833	-.00061	.00947	.77217	.10448	.00094	.00946
45.000	.79990	-.03352	-.25056	-.02174	-.00090	.00764	.79193	.10784	.00034	.00770
60.000	.80821	-.03202	-.25545	-.01660	-.00068	.00520	.79985	.11076	.00013	.00527
GRADIENT	.00200	-.00014	-.00316	-.00088	-.00040	.00107	.00199	.00021	-.00021	.00113

ORIGINAL PAGE IS
OF POOR QUALITY

DATE 26 NOV 75 TABULATED SOURCE DATA - CA20

CA20 747/1 01 S1 CARRIER DATA (SGN062) (26 NOV 75)

REFERENCE DATA

SREF =	5500.0000 SQ.FT.	XMRP =	1339.9000	IN.XC	
LREF =	327.7800 IN.	YMRP =	.0000	IN.YC	
BREF =	2348.0400 IN.	ZMRP =	190.8000	IN.ZC	
SCALE =	.0300				

PARAMETRIC DATA

ALPHAC =	4.000	BETAC =	-5.000
ELV-IB =	.000	ELV-OB =	3.000
ELEVCN =	5.000	MACH =	.600
BETAO =	.000	PHI =	.000
DX =	.000	DY =	.000

RN/L = 3.22 GRADIENT INTERVAL = .00/ 12.00

ALPHAO = 10.000

DZ	CN-C	CA-C	CLM-C	CY-C	CBL-C	CYN-C	CL-C	CD-C	CSL-C	CLN-C
.000	.32783	.01078	-.12065	.09062	.01469	-.01510	.32334	.04789	.01287	-.01667
3.000	.33091	.01128	-.12009	.08873	.01511	-.01770	.32636	.04871	.01302	-.01930
7.500	.34550	.01191	-.14360	.08522	.01472	-.01754	.34080	.05086	.01265	-.01910
15.000	.36386	.01157	-.16221	.08227	.01476	-.01768	.35910	.05245	.01268	-.01924
30.000	.39369	.00980	-.18528	.07715	.01436	-.01653	.38894	.05380	.01239	-.01806
45.000	.41275	.00813	-.19527	.07387	.01340	-.01506	.40807	.05413	.01159	-.01650
60.000	.43310	.00661	-.20286	.06651	.01178	-.01147	.42848	.05475	.01036	-.01276
GRADIENT	.00243	.00015	-.00323	-.00073	-.00000	-.00030	.00240	.00040	-.00003	-.00029

RN/L = 3.23 GRADIENT INTERVAL = .00/ 12.00

ALPHAO = 14.000

DZ	CN-C	CA-C	CLM-C	CY-C	CBL-C	CYN-C	CL-C	CD-C	CSL-C	CLN-C
.000	.25372	.01179	-.04262	.09085	.01460	-.01467	.24954	.04115	.01283	-.01623
3.000	.25695	.01122	-.03405	.09008	.01555	-.01751	.25281	.04092	.01348	-.01916
7.500	.27064	.01137	-.04710	.08790	.01564	-.01906	.26641	.04250	.01341	-.02071
15.000	.30017	.01304	-.08503	.08072	01490	-.01698	.29560	.04725	.01289	-.01856
30.000	.34805	.01226	-.13551	.07477	.01389	-.01516	.34329	.05148	.01207	-.01665
45.000	.37901	.01044	-.16396	.07374	.01379	-.01521	.37428	.05290	.01196	-.01868
60.000	.40084	.00904	-.17971	.07277	.01316	-.01473	.39614	.05379	.01138	-.01614
GRADIENT	.00232	-.00005	-.00078	-.00040	.00013	-.00057	.00231	.00019	.00007	-.00058

CA20 747/1 01 S1 CARRIER DATA (SGN063) (26 NOV 75)

REFERENCE DATA

SREF =	5500.0000 SQ.FT.	XMRP =	1339.9000	IN.XC	
LREF =	327.7800 IN.	YMRP =	.0000	IN.YC	
BREF =	2348.0400 IN.	ZMRP =	190.8000	IN.ZC	
SCALE =	.0300				

PARAMETRIC DATA

ALPHAC =	4.000	BETAC =	-5.000
ELV-IB =	.000	ELV-OB =	3.000
ELEVON =	5.000	MACH =	.600
BETAO =	.000	PHI =	.000
DX =	10.000	DY =	.000

RN/L = 3.30 GRADIENT INTERVAL = .00/ 12.00

ALPHAO = 10.000

DZ	CN-C	CA-C	CLM-C	CY-C	CBL-C	CYN-C	CL-C	CD-C	CSL-C	CLN-C
.000	.35813	.00747	-.13373	.08906	.01403	-.01464	.35382	.04777	.01227	-.01614
3.000	.35854	.00770	-.12746	.08890	.01456	-.01763	.35421	.04804	.01248	-.01917
7.500	.36914	.00865	-.14627	.08493	.01442	-.01730	.36366	.04999	.01237	-.01883
15.000	.38304	.00826	-.16553	.08298	.01428	-.01809	.37851	.05115	.01215	-.01960
30.000	.40640	.00754	-.18832	.07870	.01450	-.01742	.40183	.05288	.01244	-.01895
45.000	.42292	.00652	-.19795	.07468	.01356	-.01550	.41836	.05359	.01171	-.01695
60.000	.43727	.00530	-.20614	.07302	.01279	-.01477	.43275	.05389	.01101	-.01614
GRADIENT	.00140	.00016	-.00187	-.00058	.00004	-.00032	.00137	.00031	.00001	-.00032

RN/L = 3.27 GRADIENT INTERVAL = .00/ 12.00

ALPHAO = 14.000

DZ	CN-C	CA-C	CLM-C	CY-C	CBL-C	CYN-C	CL-C	CD-C	CSL-C	CLN-C
.000	.29321	.00526	-.00887	.09349	.01480	-.01614	.28949	.03878	.01288	-.01771
3.000	.29651	.00600	-.02033	.09271	.01525	-.01890	.29270	.03987	.01303	-.02051
7.500	.30617	.00773	-.03963	.08830	.01503	-.01911	.30212	.04260	.01279	-.02069
15.000	.32798	.00980	-.07972	.08003	.01430	-.01635	.32360	.04693	.01236	-.01787
30.000	.36568	.01002	-.13380	.07653	.01402	-.01630	.36106	.05109	.01208	-.01780
45.000	.39101	.00898	-.16107	.07389	.01364	-.01541	.38636	.05270	.01179	-.01697
60.000	.40931	.00786	-.17912	.07393	.01327	-.01534	.40468	.05351	.01144	-.01676
GRADIENT	.00176	.00033	-.00412	-.00071	.00002	-.00037	.00172	.00052	-.00001	-.00037

DATE 26 NOV 75 TABULATED SOURCE DATA - CA20

CA20 747/1 01 SI CARRIER DATA (5GN064) (26 NOV 75)

REFERENCE DATA

SREF = 5500.0000 SQ.FT. XMRP = 1339.9000 IN.XC
LREF = 327.7800 IN. YMRP = .0000 IN.YC
BREF = 2348.0400 IN. ZMRP = 190.8000 IN.ZC
SCALE = .0300

PARAMETRIC DATA

ALPHAC =	4.000	BETAC =	-5.000
ELV-IB =	.000	ELV-OB =	3.000
ELEVON =	5.000	MACH =	.600
BETAO =	.000	PHI =	.000
DX =	20.000	DY =	.000

RN/L = 3.30 GRADIENT INTERVAL = .00/ 12.00

ALPHAO = 10.000

DZ	CN-C	CA-C	CLM-C	CY-C	CBL-C	CYN-C	CL-C	CD-C	CSL-C	CLN-C
.000	.36999	.00695	-.14472	.08493	.01476	-.01590	.36567	.04849	.01286	-.01747
3.000	.37420	.00712	-.15189	.08411	.01480	-.01668	.36984	.04910	.01282	-.01826
7.500	.38108	.00726	-.16389	.08290	.01477	-.01771	.37667	.04996	.01267	-.01927
15.000	.39178	.00779	-.17684	.08063	.01466	-.01753	.38726	.05160	.01259	-.01908
30.000	.40947	.00758	-.19387	.07470	.01406	-.01543	.40487	.05324	.01221	-.01693
45.000	.42249	.00688	-.20039	.07364	.01353	-.01500	.41789	.05391	.01173	-.01645
60.000	.43485	.00591	-.20386	.07548	.01368	-.01589	.43028	.05424	.01178	-.01735
GRADIENT	.00148	.00004	-.00256	-.00027	-.00000	-.00024	.00147	.00019	-.00003	-.00024

RN/L = 3.30 GRADIENT INTERVAL = .00/ 12.00

ALPHAO = 14.000

DZ	CN-C	CA-C	CLM-C	CY-C	CBL-C	CYN-C	CL-C	CD-C	CSL-C	CLN-C
.000	.31345	.00322	-.02466	.09206	.01767	-.02205	.30984	.03887	.01511	-.02390
3.000	.31920	.00330	-.02933	.08889	.01691	-.02064	.31554	.03955	.01450	-.02241
7.500	.33021	.00466	-.05426	.08442	.01627	-.01885	.32635	.04206	.01405	-.02057
15.000	.34739	.00679	-.09143	.07733	.01520	-.01595	.34321	.04597	.01329	-.01757
30.000	.37610	.00766	-.13888	.07234	.01428	-.01439	.37168	.04983	.01254	-.01592
45.000	.39542	.00696	-.16068	.07241	.01385	-.01458	.39196	.05126	.01209	-.01606
60.000	.41168	.00619	-.17903	.07288	.01352	-.01476	.40722	.05209	.01175	-.01621
GRADIENT	.00225	.00020	-.00407	-.00102	-.00018	.00042	.00222	.00044	-.00014	.00044

DATE 26 NOV 75 TABULATED SOURCE DATA - CA20

CA20 747/1 01 S1 CARRIER DATA (SGN065) (26 NOV 75)

REFERENCE DATA

SREF =	5500.0000 SQ.FT.	XMRP =	1339.9000 IN.XC		
LREF =	327.7800 IN.	YMRP =	.0000 IN.YC		
BREF =	2348.0400 IN.	ZMRP =	190.8000 IN.ZC		
SCALE =	.0300				

PARAMETRIC DATA

ALPHAC =	8.000	BETAC =	-5.000
ELV-IB =	.000	ELV-OB =	3.000
ELEVON =	5.000	MACH =	.600
BETAO =	.000	PHI =	.000
DX =	.000	DY =	.000

RN/L = 3.22 GRADIENT INTERVAL = .00/ 12.00

ALPHAO = 10.000

DZ	CN-C	CA-C	CLM-C	CY-C	CBL-C	CYN-C	CL-C	CD-C	CSL-C	CLN-C
.000	.75593	-.02677	-.27026	.08802	.01474	-.01337	.74821	.10608	.01224	-.01561
3.000	.75773	-.02738	-.26851	.08368	.01519	-.01455	.75009	.10579	.01247	-.01685
7.500	.76456	-.02810	-.27181	.07945	.01598	-.01460	.75694	.10626	.01255	-.01692
15.000	.77460	-.02892	-.27240	.07632	.01624	-.01545	.76697	.10720	.01335	-.01792
30.000	.79423	-.03032	-.26810	.07010	.01594	-.01311	.78654	.10923	.01346	-.01557
45.000	.80913	-.03173	-.26470	.07163	.01668	-.01403	.80146	.11043	.01403	-.01660
60.000	.82456	-.03315	-.26502	.07275	.01710	-.01471	.81691	.11171	.01433	-.01735
GRADIENT	.00118	-.00018	-.00025	-.00113	.00007	-.00015	.00119	.00003	.00004	-.00016

RN/L = 3.23 GRADIENT INTERVAL = .00/ 12.00

ALPHAO = 14.000

DZ	CN-C	CA-C	CLM-C	CY-C	CBL-C	CYN-C	CL-C	CD-C	CSL-C	CLN-C
.000	.67442	-.02713	-.17795	.09516	.01595	-.01664	.66900	.09156	.01286	-.01905
3.000	.67877	-.02681	-.18235	.09073	.01619	-.01804	.67223	.09263	.01285	-.02047
7.500	.69364	-.02668	-.19825	.08192	.01557	-.01546	.68685	.09535	.01268	-.01782
15.000	.71518	-.02736	-.21830	.07459	.01561	-.01410	.70818	.09842	.01297	-.01649
30.000	.75063	-.02957	-.23604	.07203	.01609	-.01439	.74348	.10240	.01338	-.01686
45.000	.77538	-.03129	-.24662	.06940	.01588	-.01347	.76815	.10500	.01334	-.01591
60.000	.79465	-.03245	-.25108	.07139	.01657	-.01434	.78733	.10721	.01387	-.01689
GRADIENT	.00262	.00006	-.00277	-.00178	-.00006	.00019	.00257	.00051	-.00002	.00020

ORIGINAL PAGE IS
OF POOR QUALITY

CA20 747/1 01 S1 CARRIER DATA (SGN066) (26 NOV 75)

REFERENCE DATA

SREF =	5500.0000 SQ.FT.	XMRP =	1339.9000 IN.XC		
LREF =	327.7800 IN.	YMRP =	.0000 IN.YC		
BREF =	2348.0400 IN.	ZMRP =	190.8000 IN.ZC		
SCALE =	.0300				

PARAMETRIC DATA

ALPHAC =	8.000	BETAC =	-5.000
ELV-IB =	.000	ELV-OB =	3.000
ELEVCN =	5.000	MACH =	.600
BETAO =	.000	PHI =	.000
DX =	10.000	DY =	.000

RN/L = 3.24 GRADIENT INTERVAL = .00/ 12.00

ALPHAO = 10.000

DZ	CN-C	CA-C	CLM-C	CY-C	CBL-C	CYN-C	CL-C	CD-C	CSL-C	CLN-C
.000	.77694	-.03018	-.28158	.08526	.01604	-.01263	.76949	.10637	.01364	-.01511
3.000	.77654	-.03048	-.27738	.08196	.01632	-.01385	.76915	.10600	.01371	-.01636
7.500	.77995	-.03087	-.27810	.07928	.01639	-.01460	.77258	.10621	.01364	-.01711
15.000	.78801	-.03129	-.27904	.07774	.01718	-.01576	.78059	.10720	.01422	-.01839
30.000	.80095	-.03144	-.26995	.07205	.01636	-.01403	.79336	.10929	.01371	-.01654
45.000	.81154	-.03210	-.26530	.07256	.01599	-.01455	.80390	.11049	.01326	-.01699
60.000	.82017	-.03187	-.26763	.07292	.01559	-.01510	.81236	.11221	.01277	-.01746
GRADIENT	.00043	-.00009	.00041	-.00078	.00004	-.00025	.00044	-.00002	-.00000	-.00026

RN/L = 3.25 GRADIENT INTERVAL = .00/ 12.00

ALPHAO = 14.000

DZ	CN-C	CA-C	CLM-C	CY-C	CBL-C	CYN-C	CL-C	CD-C	CSL-C	CLN-C
.000	.71077	-.03184	-.17432	.09408	.01638	-.01710	.70462	.09324	.01320	-.01957
3.000	.71391	-.03138	-.17991	.09045	.01663	-.01819	.70763	.09424	.01326	-.02068
7.500	.72258	-.03063	-.19293	.08336	.01599	-.01649	.71604	.09648	.01293	-.01891
15.000	.73853	-.03056	-.21366	.07689	.01609	-.01515	.73173	.09932	.01325	-.01760
30.000	.76461	-.03119	-.23084	.07445	.01625	-.01551	.75753	.10323	.01335	-.01799
45.000	.78195	-.03155	-.23953	.07159	.01552	-.01412	.77467	.10589	.01287	-.01649
60.000	.79707	-.03156	-.24717	.07274	.01532	-.01490	.78956	.10851	.01254	-.01722
GRADIENT	.00160	.00016	-.00251	-.00144	-.00006	.00010	.00155	.00044	-.00004	.00011

CA20 747/1 01 S1 CARRIER DATA (SGN067) (26 NOV 75)

REFERENCE DATA

SREF =	5500.0000 SQ.FT.	XMRP =	1339.9000 IN.XC		
LREF =	327.7800 IN.	YMRP =	.0000 IN.YC		
BREF =	2348.0400 IN.	ZMRP =	190.8000 IN.ZC		
SCALE =	.0300				

PARAMETRIC DATA

ALPHAC =	8.000	BETAC =	-5.000
ELV-IB =	.000	ELV-OB =	3.000
ELEVON =	5.000	MACH =	.600
BETAO =	.000	PHI =	.000
DX =	20.000	DY =	.000

RN/L = 3.28 GRADIENT INTERVAL = .00/ 12.00

ALPHAO = 10.000

DZ	CN-C	CA-C	CLM-C	CY-C	CBL-C	CYN-C	CL-C	CD-C	CSL-C	CLN-C
.000	.76436	-.03885	-.29344	.07718	.01373	-.01069	.75455	.10306	.01118	-.01322
3.000	.76298	-.03918	-.28392	.07522	.01422	-.01183	.75324	.10250	.01147	-.01443
7.500	.76474	-.03826	-.27756	.07544	.01398	-.01316	.75482	.10372	.01100	-.01569
15.000	.77340	-.03910	-.27393	.07447	.01466	-.01368	.76349	.10440	.01158	-.01633
30.000	.78327	-.03823	-.26029	.06920	.01376	-.01168	.77306	.10696	.01184	-.01420
45.000	.79275	-.03928	-.25739	.06929	.01330	-.01221	.78258	.10757	.01050	-.01465
60.000	.79871	-.03904	-.26145	.07000	.01372	-.01285	.78841	.10884	.01080	-.01535
GRADIENT	.00008	.00009	.00206	-.00021	.00003	-.00033	.00006	.00010	-.00003	-.00033

RN/L = 3.29 GRADIENT INTERVAL = .00/ 12.00

ALPHAO = 14.000

DZ	CN-C	CA-C	CLM-C	CY-C	CBL-C	CYN-C	CL-C	CD-C	CSL-C	CLN-C
.000	.70878	-.04039	-.17211	.08746	.01596	-.01712	.70008	.09190	.01226	-.01984
3.000	.71378	-.03963	-.18129	.08364	.01517	-.01602	.70487	.09352	.01167	-.01872
7.500	.72058	-.03858	-.19003	.07832	.01470	-.01483	.71139	.09573	.01142	-.01745
15.000	.73289	-.03805	-.20147	.07171	.01423	-.01266	.72341	.09839	.01134	-.01525
30.000	.75475	-.03817	-.21467	.06816	.01408	-.01146	.74496	.10207	.01140	-.01404
45.000	.76892	-.03839	-.22357	.06849	.01397	-.01139	.75895	.10431	.01130	-.01334
60.000	.78173	-.03855	-.23682	.06903	.01370	-.01221	.77160	.10638	.01089	-.01471
GRADIENT	.00157	.00024	-.00235	-.00122	-.00016	.00030	.00150	.00051	-.00011	.00033

CA20 747/1 01 S1 CARRIER DATA (SGN068) (26 NOV 75)

REFERENCE DATA

SREF = 5500.0000 SQ.FT. XMRP = 1339.9000 IN.XC
LREF = 527.7800 IN. YMRP = .0000 IN.YC
BREF = 2343.0400 IN. ZMRP = 190.8000 IN.ZC
SCALE = .0300

PARAMETRIC DATA

ALPHAC =	4.000	BETAC =	-5.000
ELV-IB =	.000	ELV-OB =	3.000
ELEVON =	5.000	MACH =	.600
BETAO =	.000	PHI =	.000
DX =	.000	DY =	10.000

RN/L = 3.29 GRADIENT INTERVAL = .00/ 12.00

ALPHAO = 10.000

DZ	CN-C	CA-C	CLM-C	CY-C	CBL-C	CYN-C	CL-C	CD-C	CSL-C	CLN-C
.000	.34236	.01305	-.19797	.07189	.02136	-.01846	.33756	.05167	.01915	-.02070
3.000	.35011	.01312	-.19621	.07037	.02073	-.01759	.34526	.05255	.01882	-.01978
7.500	.36300	.01308	-.19728	.06894	.01926	-.01542	.35808	.05386	.01739	-.01746
15.000	.37818	.01235	-.19637	.06284	.01720	-.01278	.37326	.05472	.01561	-.01463
30.000	.40230	.01043	-.19958	.06068	.01443	-.01002	.39744	.05533	.01315	-.01160
45.000	.41939	.00836	-.20647	.06645	.01389	-.01255	.41465	.05506	.01234	-.01405
60.000	.43567	.00631	-.21230	.07383	.01359	-.01604	.43106	.05472	.01168	-.01749
GRADIENT	.00276	.00000	.00007	-.00067	-.00028	.00041	.00274	.00029	-.00024	.00044

RN/L = 3.22 GRADIENT INTERVAL = .00/ 12.00

ALPHAO = 14.000

DZ	CN-C	CA-C	CLM-C	CY-C	CBL-C	CYN-C	CL-C	CD-C	CSL-C	CLN-C
.000	.26899	.01281	-.12631	.06697	.02696	-.02095	.26461	.04376	.02446	-.02377
3.000	.27742	.01232	-.12161	.06734	.02579	-.02077	.27305	.04415	.02331	-.02347
7.500	.29312	.01252	-.12824	.06290	.02399	-.01746	.28865	.04599	.02188	-.01999
15.000	.31933	.01254	-.14537	.05483	.02078	-.01178	.31466	.04916	.01927	-.01401
30.000	.35940	.01238	-.16912	.04331	.01440	-.00245	.35457	.05279	.01391	-.00406
45.000	.38480	.01076	-.17922	.05595	.01342	-.00743	.38000	.05382	.01241	-.00891
60.000	.40415	.00877	-.19103	.06859	.01370	-.01262	.39946	.05387	.01215	-.01410
GRADIENT	.00324	-.00003	-.00035	-.00058	-.00040	.00049	.00323	.00031	-.00034	.00053

DATE 26 NOV 75 TABULATED SOURCE DATA - CA20

CA20 747/1 01 SI CARRIER DATA (SGN069) (26 NOV 75)

REFERENCE DATA

SREF =	5500.0000 SQ.FT.	XMRP =	1339.9000 IN.XC		
LREF =	327.7800 IN.	YMRP =	.0000 IN.YC		
BREF =	2348.0400 IN.	ZMRP =	190.8000 IN.ZC		
SCALE =	.0300				

PARAMETRIC DATA

ALPHAC =	4.000	BETAC =	-5.000
ELV-IB =	.000	ELV-OB =	3.000
ELEVON =	5.000	MACH =	.600
BETAO =	.000	PHI =	.000
DX =	10.000	DY =	10.000

RN/L = 3.25 GRADIENT INTERVAL = .00/ 12.00

ALPHAO = 10.000

DZ	CN-C	CA-C	CLM-C	CY-C	CBL-C	CYN-C	CL-C	CD-C	CSL-C	CLN-C
.0	.36190	.00927	-.19148	.07502	.01951	-.01872	.35738	.04985	.01729	-.02077
3.00	.36616	.00967	-.18896	.07388	.01934	-.01841	.36158	.05079	.01715	-.02044
7.500	.37542	.01017	-.19458	.07022	.01830	-.01624	.37073	.05226	.01634	-.01818
15.000	.38764	.00974	-.19305	.06555	.01659	-.01364	.38293	.05311	.01491	-.01542
30.000	.40741	.00904	-.19982	.06268	.01418	-.01104	.40267	.05448	.01279	-.01258
45.000	.42209	.00728	-.20664	.06664	.01360	-.01269	.41746	.05426	.01204	-.01416
60.000	.43523	.00553	-.20835	.07322	.01344	-.01564	.43070	.05389	.01157	-.01708
GRADIENT	.00182	.00012	-.00048	-.00065	-.00017	.00034	.00180	.00031	-.00013	.00036

RN/L = 3.25 GRADIENT INTERVAL = .00/ 12.00

ALPHAO = 14.000

DZ	CN-C	CA-C	CLM-C	CY-C	CBL-C	CYN-C	CL-C	CD-C	CSL-C	CLN-C
.000	.30337	.00669	-.10012	.07268	.02393	-.02090	.29944	.04127	.02145	-.02341
3.000	.30656	.00655	-.09564	.07266	.02349	-.02122	.30264	.04147	.02099	-.02357
7.500	.31694	.00830	-.10814	.06679	.02215	-.01761	.31277	.04429	.02003	-.01984
15.000	.33735	.00977	-.13213	.05818	.01912	-.01235	.33292	.04788	.01757	-.01440
30.000	.37060	.01017	-.16211	.04619	.01360	-.00342	.36594	.05176	.01301	-.00493
45.000	.39171	.00904	-.17493	.05871	.01321	-.00886	.38706	.05284	.01206	-.01031
60.000	.40868	.00751	-.18730	.06675	.01332	-.01287	.40409	.05309	.01174	-.01431
GRADIENT	.00185	.00023	-.00120	-.00083	-.00024	.00047	.00181	.00042	-.00019	.00049

DATE 26 NOV 75 TABULATED SOURCE DATA - CA20

CA20 747/1 01 S1 CARRIER DATA (SGN070) (26 NOV 75)

REFERENCE DATA

SREF =	5500.0000 SQ.FT.	XMRP =	1339.9000 IN.XC		
LREF =	327.7800 IN.	YMRP =	.0000 IN.YC		
BREF =	2348.0400 IN.	ZMRP =	190.8000 IN.ZC		
SCALE =	.0300				

PARAMETRIC DATA

ALPHAC =	0.000	BETAC =	-5.000
ELV-IB =	.000	ELV-OB =	3.000
ELEVON =	5.000	MACH =	.600
BETAO =	.000	PHI =	.000
DX =	.000	DY =	10.000

RN/L = 3.26 GRADIENT INTERVAL = .00/ 12.00

ALPHAO = 10.000

DZ	CN-C	CA-C	CLM-C	CY-C	CBL-C	CYN-C	CL-C	CD-C	CSL-C	CLN-C
.000	.75802	-.02607	-.31214	.06528	.01858	-.01543	.75014	.10713	.01566	-.01831
3.000	.76193	-.02689	-.30713	.06372	.01851	-.01460	.75414	.10700	.01574	-.01748
7.500	.76789	-.02746	-.29937	.06131	.01794	-.01283	.76011	.10747	.01548	-.01564
15.000	.77693	-.02808	-.28565	.05857	.01655	-.01060	.76912	.10844	.01460	-.01322
30.000	.79453	-.02974	-.27359	.06063	.01540	-.01034	.78674	.10926	.01341	-.01274
45.000	.80878	-.03105	-.27099	.06595	.01544	-.01241	.80100	.11104	.01309	-.01479
60.000	.82362	-.03261	-.27003	.07174	.01600	-.01480	.81589	.11208	.01323	-.01724
GRADIENT	.00132	-.00018	.00170	-.00053	-.00009	.00035	.00133	.00005	-.00003	.00036

RN/L = 3.21 GRADIENT INTERVAL = .00/ 12.00

ALPHAO = 14.000

DZ	CN-C	CA-C	CLM-C	CY-C	CBL-C	CYN-C	CL-C	CD-C	CSL-C	CLN-C
.000	.67520	-.02505	-.23337	.06021	.02387	-.01837	.66841	.09376	.02036	-.02213
3.000	.68804	-.02518	-.23425	.05808	.02277	-.01601	.67911	.09551	.01968	-.01960
7.500	.70170	-.02568	-.24166	.05424	.02102	-.01267	.69461	.09773	.01854	-.01601
15.000	.72342	-.02645	-.24627	.04723	.01811	-.00723	.71614	.10074	.01651	-.01015
30.000	.75387	-.02777	-.24503	.04592	.01461	-.00361	.74636	.10473	.01380	-.00598
45.000	.77706	-.02957	-.25181	.05994	.01524	-.01000	.76951	.10699	.01331	-.01238
60.000	.79452	-.03085	-.25669	.06573	.01535	-.01248	.78692	.10875	.01298	-.01484
GRADIENT	.00353	-.00009	-.00115	-.00080	-.00038	.00076	.00349	.00053	-.00024	.00081

ORIGINAL PAGE IS
OF POOR QUALITY

CA20 747/1 01 S1 CARRIER DATA (5GND71) (26 NOV 75)

REFERENCE DATA

SREF = 5500.0000 SQ.FT. XMRP = 1339.9000 IN.XC
LREF = 327.7800 IN. YMRP = .0000 IN.YC
BREF = 2348.0400 IN. ZMRP = 190.8000 IN.ZC
SCALE = .0300

PARAMETRIC DATA

ALPHAC =	8.000	BETAC =	-5.000
ELV-IB =	.000	ELV-OB =	3.000
ELEVON =	5.000	MACH =	.600
BETAO =	.000	PHI =	.000
DX =	10.000	DY =	10.000

RN/L = 3.25 GRADIENT INTERVAL = .00/ 12.00

ALPHAO = 10.000

DZ	CN-C	CA-C	CLM-C	CY-C	CBL-C	CYN-C	CL-C	CD-C	CSL-C	CLN-C
.000	.77301	-.02803	-.31144	.06831	.01728	-.01576	.76525	.10780	.01431	-.01841
3.000	.77509	-.02839	-.30554	.06661	.01731	-.01505	.76736	.10781	.01447	-.01771
7.500	.77917	-.02871	-.29720	.06414	.01694	-.01362	.77143	.10820	.01436	-.01625
15.000	.78694	-.02897	-.28721	.06167	.01620	-.01192	.77913	.10930	.01392	-.01444
30.000	.80000	-.02923	-.27404	.06102	.01471	-.01063	.79203	.11131	.01268	-.01291
45.000	.81295	-.03075	-.27018	.06557	.01481	-.01243	.80506	.11206	.01246	-.01470
60.000	.82578	-.03266	-.26933	.06949	.01570	-.01386	.81803	.11241	.01309	-.01626
GRADIENT	.00083	-.00009	.00190	-.00056	-.00005	.00029	.00083	.00006	.00000	.00029

RN/L = 3.25 GRADIENT INTERVAL = .00/ 12.00

ALPHAO = 14.000

DZ	CN-C	CA-C	CLM-C	CY-C	CBL-C	CYN-C	CL-C	CD-C	CSL-C	CLN-C
.000	.71077	-.02841	-.21735	.06509	.02105	-.01784	.70402	.09662	.01767	-.02111
3.000	.71687	-.02817	-.22030	.06301	.02045	-.01634	.70999	.09791	.01734	-.01953
7.500	.72804	-.02808	-.22882	.05763	.01901	-.01288	.72097	.09994	.01652	-.01587
15.000	.74345	-.02803	-.23630	.05053	.01691	-.00807	.73614	.10266	.01529	-.01077
30.000	.76529	-.02813	-.23703	.04986	.01425	-.00552	.75766	.10636	.01312	-.00780
45.000	.78486	-.02940	-.24554	.06082	.01474	-.01052	.77716	.10851	.01273	-.01281
60.000	.79880	-.03049	-.25251	.06520	.01467	-.01244	.79107	.10986	.01233	-.01469
GRADIENT	.00232	.00004	-.00156	-.00101	-.00028	.00067	.00227	.00044	-.00015	.00071

CA20 747/1 01 S1 CARRIER DATA (5GN072) (26 NOV 75)

REFERENCE DATA

SREF = 5500.0000 SQ.FT. XMRP = 1339.9000 IN.XC
LREF = 327.7800 IN. YMRP = .0000 IN.YC
BREF = 2348.0400 IN. ZMRP = 190.8000 IN.ZC
SCALE = .0300

PARAMETRIC DATA

ALPHAC = 4.000 BETAC = 5.000
ELV-IB = .000 ELV-OB = 3.000
ELEVON = 5.000 MACH = .600
BETAO = .000 PHI = .000
DX = .000 DY = 10.000

RN/L = 3.28 GRADIENT INTERVAL = .00/ 12.00

ALPHAO = 10.000

DZ	CN-C	CA-C	CLM-C	CY-C	CBL-C	CYN-C	CL-C	CD-C	CSL-C	CLN-C
.000	.34618	.01340	-.10295	-.09896	-.00450	.00938	.34134	.05229	-.00329	.00997
3.000	.35416	.01288	-.11673	-.10025	-.00645	.01301	.34933	.05261	-.00485	.01378
7.500	.36894	.01170	-.14078	-.10569	-.00870	.01827	.36416	.05297	-.00654	.01925
15.000	.38583	.00986	-.17165	-.10647	-.01045	.02156	.38115	.05291	-.00793	.02270
30.000	.41192	.00754	-.20182	-.10699	-.01260	.02438	.40734	.05333	-.00978	.02573
45.000	.42842	.00575	-.21128	-.10246	-.01334	.02337	.42393	.05327	-.01062	.02481
60.000	.44558	.00369	-.21947	-.09698	-.01388	.02182	.44122	.05303	-.01131	.02332
GRADIENT	.00305	-.00023	-.00507	-.00092	-.00055	.00118	.00306	.00009	-.00043	.00124

RN/L = 3.22 GRADIENT INTERVAL = .00/ 12.00

ALPHAO = 14.000

DZ	CN-C	CA-C	CLM-C	CY-C	CBL-C	CYN-C	CL-C	CD-C	CSL-C	CLN-C
.000	.25801	.01068	.02087	-.09896	.00125	.00221	.25394	.04037	.00168	.00223
3.000	.26604	.01115	.01017	-.10049	-.00126	.00774	.26188	.04168	-.00024	.00800
7.500	.28513	.01168	-.02311	-.10657	-.00469	.01594	.28077	.04419	-.00279	.01651
15.000	.31650	.01195	-.08453	-.10651	-.00806	.02075	.31397	.04795	-.00564	.02165
30.000	.36324	.01002	-.15119	-.10919	-.01142	.02476	.35866	.05071	-.00856	.02598
45.000	.39201	.00813	-.18230	-.10597	-.01272	.02493	.38747	.05184	-.00984	.02630
60.000	.41234	.00675	-.19951	-.10098	-.01315	.02338	.40784	.05259	-.01043	.02479
GRADIENT	.00366	.00013	-.00599	-.00104	-.00079	.00183	.00363	.00051	-.00059	.00190

DATE 26 NOV 75 TABULATED SOURCE DATA - CA20

CA20 747/1 01 S1 CARRIER DATA (5GN073) (26 NOV 75)

REFERENCE DATA

SREF =	5500.0000 SQ.FT.	XMRP =	1339.9000 IN.XC		
LREF =	327.7800 IN.	YMRP =	.0000 IN.YC		
BREF =	2348.0400 IN.	ZMRP =	190.8000 IN.ZC		
SCALE =	.0300				

PARAMETRIC DATA

ALPHAC =	4.000	BETAC =	5.000
ELV-IB =	.000	ELV-OB =	3.000
ELEVON =	5.000	MACH =	.600
BETAO =	.000	PHI =	.000
DX =	10.000	DY =	10.000

RUN NO. 0/ 0 RN/L = 3.24 GRADIENT INTERVAL = .00/ 12.00

ALPHAO	DZ	CN-C	CA-C	CLM-C	CY-C	CBL-C	CYN-C	CL-C	CD-C	CSL-C	CLN-C
10.000	.000	.35838	.01036	-.09858	-.09230	-.00548	.00766	.35379	.05054	-.00444	.00836
10.000	3.000	.36271	.01018	-.10684	-.09493	-.00715	.01155	.35812	.05081	-.00570	.01241
10.000	7.500	.37372	.00950	-.13033	-.10063	-.00911	.01686	.36914	.05129	-.00710	.01789
10.000	15.000	.38856	.00810	-.16240	-.10344	-.01076	.02072	.38404	.05145	-.00833	.02190
10.000	30.000	.41121	.00609	-.19715	-.10516	-.01298	.02381	.40678	.05182	-.01021	.02520
10.000	45.000	.42673	.00498	-.20732	-.10224	-.01364	.02340	.42233	.05233	-.01092	.02486
10.000	60.000	.44161	.00382	-.20911	-.09962	-.01422	.02272	.43725	.05274	-.01157	.02425
	GRADIENT	.00208	-.00012	-.00438	-.00112	-.00048	.00122	.00208	.00010	-.00035	.00127

CA20 747/1 01 S1 CARRIER DATA (5GN074) (26 NOV 75)

REFERENCE DATA

SREF =	5500.0000 SQ.FT.	XMRP =	1339.9000 IN.XC		
LREF =	327.7800 IN.	YMRP =	.0000 IN.YC		
BREF =	2348.0400 IN.	ZMRP =	190.8000 IN.ZC		
SCALE =	.0300				

PARAMETRIC DATA

ALPHAC =	8.000	BETAC =	5.000
ELV-IB =	.000	ELV-OB =	3.000
ELEVON =	5.000	MACH =	.600
BETAO =	.000	PHI =	.000
DX =	.000	DY =	10.000

RN/L = 3.27 GRADIENT INTERVAL = .00/ 12.00

ALPHAO = 10.000

DZ	CN-C	CA-C	CLM-C	CY-C	CBL-C	CYN-C	CL-C	CD-C	CSL-C	CLN-C
.000	.76624	-.02730	-.26500	-.10403	-.00633	.01199	.75829	.10760	-.00409	.01300
3.000	.76793	-.02833	-.26651	-.10502	-.00745	.01581	.76013	.10688	-.00453	.01695
7.500	.77067	-.02907	-.27011	-.10496	-.00827	.01860	.76295	.10663	-.00485	.01984
15.000	.77931	-.02966	-.27453	-.10645	-.00957	.02205	.77157	.10755	-.00554	.02346
30.000	.79597	-.03013	-.27802	-.10173	-.01084	.02227	.78806	.10998	-.00675	.02390
45.000	.80853	-.03003	-.27659	-.09869	-.01114	.02164	.80041	.11226	-.00715	.02333
60.000	.82102	-.02976	-.27601	-.09538	-.01129	.02120	.81266	.11470	-.00738	.02293
GRADIENT	.00059	-.00023	-.00069	-.00011	-.00025	.00086	.00062	-.00012	-.00010	.00089

CA20 747/1 01 S1 CARRIER DATA (SGN074) (26 NOV 75)

REFERENCE DATA

SREF = 5500.0000 SQ.FT. XMRP = 1339.9000 IN.XC
LREF = 327.7800 IN. YMRP = .0000 IN.YC
BREF = 2348.0400 IN. ZMRP = 190.8000 IN.ZC
SCALE = .0300

PARAMETRIC DATA

ALPHAC = 0.000 BETAC = 5.000
ELV-IB = .000 ELV-OB = 3.000
ELEVON = 5.000 MACH = .600
BETAO = .000 PHI = .000
DX = .000 DY = 10.000

RN/L = 3.22 GRADIENT INTERVAL = .00/ 12.00

ALPHAO = 14.000

DZ	CN-C	CA-C	CLM-C	CY-C	CBL-C	CYN-C	CL-C	CD-C	CSL-C	CLN-C
.000	.68430	-.02657	-.16630	-.10531	-.00206	.00750	.67746	.09409	-.00067	.00783
3.000	.69341	-.02739	-.17665	-.10796	-.00478	.01345	.68658	.09487	-.00231	.01416
7.500	.70922	-.02863	-.20509	-.11082	-.00707	.01883	.70236	.09639	-.00363	.01985
15.000	.72794	-.03014	-.23136	-.11021	-.00909	.02234	.72106	.09816	-.00501	.02367
30.000	.75602	-.03087	-.25174	-.10717	-.01112	.02432	.74885	.10231	-.00667	.02597
45.000	.77897	-.03101	-.25851	-.10137	-.01197	.02268	.77147	.10616	-.00779	.02450
60.000	.79522	-.03154	-.26357	-.09759	-.01263	.02137	.78756	.10846	-.00867	.02333
GRADIENT	.00334	-.00027	-.00526	-.00073	-.00065	.00149	.00333	.00031	-.00039	.00158

CA20 747/1 01 S1 CARRIER DATA (SGN075) (26 NOV 75)

REFERENCE DATA

SREF = 5500.0000 SQ.FT. XMRP = 1339.9000 IN.XC
LREF = 327.7800 IN. YMRP = .0000 IN.YC
BREF = 2348.0400 IN. ZMRP = 190.8000 IN.ZC
SCALE = .0300

PARAMETRIC DATA

ALPHAC = 8.000 BETAC = 5.000
ELV-IB = .000 ELV-OB = 3.000
ELEVON = 5.000 MACH = .600
BETAO = .000 PHI = .000
DX = 10.000 DY = 10.000

RN/L = 3.24 GRADIENT INTERVAL = .00/ 12.00

ALPHAO = 10.000

DZ	CN-C	CA-C	CLM-C	CY-C	CBL-C	CYN-C	CL-C	CD-C	CSL-C	CLN-C
.000	.77337	-.02501	-.26959	-.09835	-.00533	.01183	.76491	.11109	-.00314	.01266
3.000	.77525	-.02570	-.27082	-.09987	-.00629	.01465	.76689	.11074	-.00359	.01561
7.500	.77831	-.02652	-.27241	-.10194	-.00747	.01799	.77004	.11047	-.00417	.01910
15.000	.78478	-.02739	-.27593	-.10354	-.00908	.02159	.77656	.11074	-.00513	.02292
30.000	.79843	-.02757	-.27853	-.10155	-.00995	.02261	.79003	.11293	-.00591	.02403
45.000	.80866	-.02761	-.27569	-.09938	-.01002	.02243	.80011	.11466	-.00591	.02391
60.000	.81920	-.02747	-.28014	-.09811	-.00996	.02250	.81048	.11663	-.00584	.02398
GRADIENT	.00066	-.00020	-.00037	-.00048	.00028	.00082	.00069	-.00008	-.00014	.00085

CA20 747/1 01 SI CARRIER DATA (SGN075) (26 NOV 75)

REFERENCE DATA

SREF = 5500.0000 SQ.FT. XMRP = 1339.9000 IN.XC
LREF = 327.7800 IN. YMRP = .0000 IN.YC
BREF = 2348.0400 IN. ZMRP = 190.8000 IN.ZC
SCALE = .0300

PARAMETRIC DATA

ALPHAC =	8.000	BETAC =	5.000
ELV-IB =	.000	ELV-OB =	3.000
ELEVON =	5.000	MACH =	.600
BETAO =	.000	PHI =	.000
DX =	10.000	DY =	10.000

RN/L = 3.23 GRADIENT INTERVAL = .00/ 12.00

ALPHAO = 14.000

DZ	CN-C	CA-C	CLM-C	CY-C	CBL-C	CYN-C	CL-C	CD-C	CSL-C	CLN-C
.000	.68422	-.02589	-.14615	-.09983	-.00301	.00929	.67727	.09475	-.00129	.00975
3.000	.68918	-.02637	-.16166	-.10262	-.00456	.01391	.68223	.09514	-.00201	.01458
7.500	.70165	-.02730	-.18743	-.10613	-.00667	.01838	.69468	.09639	-.00331	.01935
15.000	.71593	-.02872	-.20908	-.10737	-.00865	.02196	.70899	.09747	-.00465	.02322
30.000	.74336	-.03068	-.24104	-.10668	-.01200	.02403	.73634	.10030	-.00759	.02584
45.000	.76574	-.03123	-.25132	-.10133	-.01350	.02227	.75848	.10365	-.00937	.02436
60.000	.78134	-.03210	-.25876	-.09798	-.01420	.02130	.77399	.10550	-.01022	.02753
GRADIENT	.00236	-.00019	-.00552	-.00083	-.00049	.00120	.00236	.00027	-.00027	.00126

ORIGINAL PAGE IS OF POOR QUALITY

CA20 747/1 01 SI CARRIER DATA (SGN076) (26 NOV 75)

REFERENCE DATA

SREF = 5500.0000 SQ.FT. XMRP = 1339.9000 IN.XC
LREF = 327.7800 IN. YMRP = .0000 IN.YC
BREF = 2348.0400 IN. ZMRP = 190.8000 IN.ZC
SCALE = .0300

PARAMETRIC DATA

ALPHAC =	4.000	BETAC =	-5.000
ELV-IB =	.000	ELV-OB =	3.000
ELEVON =	5.000	MACH =	.600
BETAO =	.000	PHI =	7.500
DX =	.000	DY =	.000

RN/L = 3.22 GRADIENT INTERVAL = .00/ 12.00

ALPHAO = 10.000

DZ	CN-C	CA-C	CLM-C	CY-C	CBL-C	CYN-C	CL-C	CD-C	CSL-C	CLN-C
.000	.33821	.01175	-.11727	.07661	.01142	-.00965	.33357	.04994	.01019	-.01091
3.000	.34287	.01150	-.11815	.07794	.01190	-.01313	.33822	.05018	.01030	-.01442
7.500	.35368	.01130	-.13276	.08107	.01279	-.01681	.34900	.05111	.01080	-.01818
15.000	.37444	.01058	-.16140	.07925	.01297	-.01686	.36972	.05257	.01098	-.01824
30.000	.40116	.00900	-.18442	.07878	.01352	-.01744	.39646	.05379	.01153	-.01887
45.000	.41867	.00752	-.19633	.07599	.01292	-.01601	.41403	.05414	.01102	-.01739
60.000	.43554	.00590	-.20608	.07110	.01210	-.01341	.43097	.05430	.01047	-.01472
GRADIENT	.00209	-.00006	-.00216	.00060	.00018	-.00094	.00208	.00016	.00008	-.00096

DATE 26 NOV 75 TABULATED SOURCE DATA - CA20

CA20 747/1 01 SI CARRIER DATA (SGNC76) (26 NOV 75)

REFERENCE DATA

SREF =	5500.0000 SQ.FT.	XMRP =	1339.9000	IN.XC	
LREF =	327.7800 IN.	YMRP =	.0000	IN.YC	
BREF =	2348.0400 IN.	ZMRP =	190.8000	IN.ZC	
SCALE =	.0300				

PARAMETRIC DATA

ALPHAC =	4.000	BETAC =	-5.000
ELV-IB =	.000	ELV-OB =	3.000
ELEVON =	5.000	MACH =	.600
BETAO =	.000	PHI =	7.500
DX =	.000	DY =	.000

RN/L = 3.24 GRADIENT INTERVAL = .00/ 12.00

ALPHAO = 14.000

DZ	CN-C	CA-C	CLM-C	CY-C	CBL-C	CYN-C	CL-C	CD-C	CSL-C	CLN-C
.000	.25777	.00926	-.02212	.07401	.01047	-.00818	.25383	.03905	.00940	-.00935
3.000	.26776	.01073	-.02982	.07762	.01126	-.01210	.26361	.04156	.00977	-.01333
7.500	.28202	.01169	-.04447	.08050	.01195	-.01561	.27769	.04401	.01009	-.01689
15.000	.31016	.01226	-.08401	.07646	.01188	-.01442	.30562	.04752	.01015	-.01570
30.000	.35648	.01096	-.13920	.07885	.01306	-.01692	.35182	.05107	.01106	-.01831
45.000	.38520	.00936	-.16580	.07721	.01305	-.01658	.38055	.05248	.01109	-.01797
60.000	.40525	.00774	-.18258	.07625	.01287	-.01617	.40066	.05296	.01095	-.01754
GRADIENT	.00323	.00032	-.00300	.00085	.00019	-.00097	.00318	.00065	.00009	-.00099

CA20 747/1 01 SI CARRIER DATA (SGN077) (26 NOV 75)

REFERENCE DATA

SREF =	5500.0000 SQ.FT.	XMRP =	1339.9000	IN.XC	
LREF =	327.7800 IN.	YMRP =	.0000	IN.YC	
BREF =	2348.0400 IN.	ZMRP =	190.8000	IN.ZC	
SCALE =	.0300				

PARAMETRIC DATA

ALPHAC =	4.000	BETAC =	-5.000
ELV-IB =	.000	ELV-OB =	3.000
ELEVON =	5.000	MACH =	.600
BETAO =	.000	PHI =	7.500
DX =	10.000	DY =	.000

RN/L = 3.29 GRADIENT INTERVAL = .00/ 12.00

ALPHAO = 10.000

DZ	CN-C	CA-C	CLM-C	CY-C	CBL-C	CYN-C	CL-C	CD-C	CSL-C	CLN-C
.000	.35917	.00861	-.12865	.07984	.01112	-.00918	.35474	.04901	.00994	-.01041
3.000	.36824	.00867	-.12008	.08208	.01214	-.01361	.35381	.04897	.01049	-.01492
7.500	.36529	.00905	-.13080	.08591	.01289	-.01732	.36078	.05009	.01085	-.01869
15.000	.38147	.00911	-.15826	.08480	.01339	-.01828	.37686	.05184	.01125	-.01970
30.000	.40444	.00784	-.17952	.09242	.01397	-.01859	.39984	.05298	.01179	-.02006
45.000	.42132	.00685	-.19477	.07817	.01303	-.01638	.41673	.05376	.01108	-.01777
60.000	.43528	.00600	-.21090	.07493	.01312	-.01509	.43071	.05437	.01131	-.01650
GRADIENT	.00088	.00006	-.00043	.00081	.00023	-.00107	.00087	.00015	.00012	-.00108

CA20 747/1 01 S1 CARRIER DATA (SGN077) (26 NOV 75)

REFERENCE DATA

SREF =	5500.0000 SQ.FT.	XMRP =	1339.9000 IN.XC		
LREF =	327.7800 IN.	YMRP =	.0000 IN.YC		
BREF =	2348.0400 IN.	ZMRP =	190.8000 IN.ZC		
SCALE =	.0300				

PARAMETRIC DATA

ALPHAC =	4.000	BETAC =	-5.000
ELV-IB =	.000	ELV-OB =	3.000
ELEVON =	5.000	MACH =	.600
BETAO =	.000	PHI =	7.500
DX =	10.000	DY =	.000

RN/L = 3.29 GRADIENT INTERVAL = .00/ 12.00

ALPHAO = 14.000

DZ	CN-C	CA-C	CLM-C	CY-C	CBL-C	CYN-C	CL-C	CD-C	CSL-C	CLN-C
.000	.29465	.00450	-.00335	.07577	.01013	-.00540	.29100	.03818	.00935	-.00655
3.000	.29685	.00562	-.01085	.07985	.01119	-.01075	.29307	.03952	.00985	-.01198
7.500	.30389	.00721	-.02112	.08364	.01195	-.01568	.29991	.04184	.01008	-.01696
15.000	.32669	.00909	-.06952	.08084	.01210	-.01571	.32239	.04609	.01023	-.01700
30.000	.36361	.00870	-.12656	.08260	.01362	-.01831	.35914	.04957	.01147	-.01975
45.000	.38896	.00828	-.15897	.07927	.01333	-.01693	.38440	.05180	.01133	-.01835
60.000	.40784	.00668	-.17743	.07862	.01328	-.01663	.40334	.05218	.01131	-.01805
GRADIENT	.00126	.00036	-.00236	.00103	.00024	-.00135	.00121	.00049	.00009	-.00137

CA20 747/1 01 S1 CARRIER DATA (SGN078) (26 NOV 75)

REFERENCE DATA

SREF =	5500.0000 SQ.FT.	XMRP =	1339.9000 IN.XC		
LREF =	327.7800 IN.	YMRP =	.0000 IN.YC		
BREF =	2348.0400 IN.	ZMRP =	190.8000 IN.ZC		
SCALE =	.0300				

PARAMETRIC DATA

ALPHAC =	8.000	BETAC =	-5.000
ELV-IB =	.000	ELV-OB =	3.000
ELEVON =	5.000	MACH =	.600
BETAO =	.000	PHI =	7.500
DX =	.000	DY =	.000

RN/L = 3.21 GRADIENT INTERVAL = .00/ 12.00

ALPHAO = 10.000

DZ	CN-C	CA-C	CLM-C	CY-C	CBL-C	CYN-C	CL-C	CD-C	CSL-C	CLN-C
.000	.76031	-.02709	-.26598	.07958	.01254	-.01089	.75258	.10552	.01050	-.01279
3.000	.76228	-.02791	-.26283	.08052	.01330	-.01441	.75466	.10606	.01064	-.01639
7.500	.76937	-.02849	-.26777	.08010	.01367	-.01592	.76175	.10672	.01075	-.01784
15.000	.77813	-.02910	-.26943	.07887	.01451	-.01694	.77048	.10764	.01138	-.01909
30.000	.79431	-.03013	-.26402	.07268	.01423	-.01438	.78659	.10943	.01155	-.01652
45.000	.80690	-.03081	-.26228	.07414	.01488	-.01520	.79910	.11095	.01206	-.01744
60.000	.81617	-.03157	-.26352	.07534	.01550	-.01561	.80837	.11181	.01259	-.01795
GRADIENT	.00124	-.00018	-.00031	.00006	.00014	-.00063	.00125	.00004	.00003	-.00065

CA20 747/1 01 SI CARRIER DATA (SGN078) (26 NOV 75)

REFERENCE DATA

SREF =	5500.0000 SQ.FT.	XMRP =	1339.9000	IN.XC	
LREF =	327.7800 IN.	YMRP =	.0000	IN.YC	
BREF =	2348.0400 IN.	ZMRP =	190.8000	IN.ZC	
SCALE =	.0300				

PARAMETRIC DATA

ALPHAC =	8.000	BETAC =	-5.000
ELV-IB =	.000	ELV-OB =	3.000
ELEVON =	5.000	MACH =	.600
BETAO =	.000	PHI =	7.500
DX =	.000	DY =	.000

RN/L = 3.30 GRADIENT INTERVAL = .00/ 12.00

ALPHAC = 14.000

DZ	CN-C	CA-C	CLM-C	CY-C	CBL-C	CYN-C	CL-C	CD-C	CSL-C	CLN-C
.000	.68424	-.02784	-.17657	.08083	.01297	-.01024	.67780	.09257	.01103	-.01223
3.000	.68795	-.02795	-.17671	.08224	.01340	-.01394	.68147	.09311	.01081	-.01594
7.500	.70060	-.02808	-.19209	.08112	.01364	-.01564	.69395	.09518	.01075	-.01765
15.000	.72174	-.02861	-.21478	.07512	.01341	-.01387	.71486	.09832	.01083	-.01587
30.000	.75409	-.03022	-.23473	.07974	.01518	-.01792	.74700	.10236	.01188	-.02017
45.000	.77603	-.03072	-.24308	.07445	.01466	-.01528	.76869	.10567	.01182	-.01748
60.000	.79193	-.03154	-.24921	.07542	.01499	-.01575	.78447	.10762	.01206	-.01800
GRADIENT	.00223	-.00003	-.00217	.00002	.00009	-.00069	.00220	.00036	-.00004	-.00070

CA20 747/1 01 SI CARRIER DATA (SGN079) (26 NOV 75)

REFERENCE DATA

SREF =	5500.0000 SQ.FT.	XMRP =	1339.9000	IN.XC	
LREF =	327.7800 IN.	YMRP =	.0000	IN.YC	
BREF =	2348.0400 IN.	ZMRP =	190.8000	IN.ZC	
SCALE =	.0300				

PARAMETRIC DATA

ALPHAC =	8.000	BETAC =	-5.000
ELV-IB =	.000	ELV-OB =	3.000
ELEVON =	5.000	MACH =	.600
BETAO =	.000	PHI =	7.500
DX =	10.000	DY =	.000

RN/L = 3.28 GRADIENT INTERVAL = .00/ 12.00

ALPHAO = 10.000

DZ	CN-C	CA-C	CLM-C	CY-C	CBL-C	CYN-C	CL-C	CD-C	CSL-C	CLN-C
.000	.76985	-.02847	-.27442	.08182	.01265	-.01040	.76221	.10682	.01069	-.01233
3.000	.76824	-.02877	-.26599	.08394	.01361	-.01482	.76068	.10625	.01087	-.01684
7.500	.77156	-.02914	-.26684	.08652	.01438	-.01825	.76401	.10545	.01103	-.02035
15.000	.78042	-.02932	-.27288	.08305	.01483	-.01745	.77276	.10782	.01161	-.01955
30.000	.79321	-.03008	-.26571	.07612	.01494	-.01562	.78549	.10929	.01204	-.01787
45.000	.80556	-.03113	-.25814	.07653	.01555	-.01549	.79784	.11040	.01266	-.01784
60.000	.81218	-.03268	-.25787	.07480	.01594	-.01351	.80463	.11003	.01329	-.01555
GRADIENT	.00027	-.00009	.00090	.00062	.00023	-.00102	.00028	-.00004	.00004	-.00105

CA20 747/1 01 S1 CARRIER DATA (SGN079) (26 NOV 75)

REFERENCE DATA

SREF =	5500.0000 SQ.FT.	XMRP =	1339.9000 IN.XC		
LREF =	327.7800 IN.	YMRP =	.0000 IN.YC		
BREF =	2348.0400 IN.	ZMRP =	190.8000 IN.ZC		
SCALE =	.0300				

PARAMETRIC DATA

ALPHAC =	8.000	BETAC =	-5.000
ELV-IB =	.000	ELV-OB =	3.000
ELEVON =	5.000	MACH =	.600
BETAO =	.000	PHI =	7.500
DX =	10.000	DY =	.000

RN/L = 3.27 GRADIENT INTERVAL = .00/ 12.00

ALPHAO = 14.000

DZ	CN-C	CA-C	CLM-C	CY-C	CBL-C	CYN-C	CL-C	CD-C	CSL-C	CLN-C
.000	.71023	-.02926	-.16869	.08400	.01086	-.00955	.70364	.09569	.00907	-.01117
3.000	.70707	-.02916	-.15627	.08604	.01187	-.01458	.70051	.09524	.00920	-.01631
7.500	.71364	-.02908	-.16754	.09074	.01310	-.02036	.70696	.09646	.00941	-.02221
15.000	.72986	-.02894	-.19465	.08095	.01283	-.01662	.72292	.09942	.00978	-.01848
30.000	.75531	-.02951	-.21752	.08188	.01403	-.01909	.74807	.10327	.01054	-.02112
45.000	.77318	-.02996	-.22962	.07555	.01387	-.01546	.76575	.10593	.01101	-.01753
60.000	.78736	-.03104	-.23841	.07777	.01468	-.01634	.77991	.10733	.01166	-.01853
GRADIENT	.00053	.00002	-.00006	.00091	.00030	-.00143	.00052	.00012	.00004	-.00146

CA20 747/1 01 S1 CARRIER DATA (SGN080) (26 NOV 75)

REFERENCE DATA

SREF =	5500.0000 SQ.FT.	XMRP =	1339.9000 IN.XC		
LREF =	327.7800 IN.	YMRP =	.0000 IN.YC		
BREF =	2348.0400 IN.	ZMRP =	190.8000 IN.ZC		
SCALE =	.0300				

PARAMETRIC DATA

ALPHAC =	4.000	BETAC =	-5.000
ELV-IB =	.000	ELV-OB =	3.000
ELEVON =	5.000	MACH =	.600
BETAO =	.000	PHI =	7.500
DX =	.000	DY =	10.000

RN/L = 3.33 GRADIENT INTERVAL = .00/ 12.00

ALPHAO = 10.000

DZ	CN-C	CA-C	CLM-C	CY-C	CBL-C	CYN-C	CL-C	CD-C	CSL-C	CLN-C
.000	.34487	.01412	-.20066	.06407	.01761	-.01443	.33934	.05300	.01584	-.01631
3.000	.35021	.01366	-.18955	.06348	.01762	-.01417	.34530	.05310	.01588	-.01605
7.500	.36117	.01330	-.18811	.06247	.01687	-.01319	.35624	.05388	.01524	-.01500
15.000	.37644	.01238	-.18924	.06096	.01534	-.01132	.37152	.05457	.01391	-.01298
30.000	.40177	.01010	-.19397	.06348	.01362	-.01118	.39695	.05495	.01221	-.01266
45.000	.41783	.00830	-.20368	.06998	.01344	-.01364	.41311	.05484	.01179	-.01508
60.000	.43013	.00730	-.21941	.07735	.01403	-.01785	.42545	.05513	.01193	-.01934
GRADIENT	.00219	-.00011	.00157	-.00021	-.00010	.00017	.00219	.00012	-.00009	.00018

ORIGINAL PAGE IS OF POOR QUALITY

CA20 747/1 01 S1 CARRIER DATA (5GN080) (26 NOV 75)

REFERENCE DATA

SREF =	5500.0000 SQ.FT.	XMRP =	1339.9000	IN.XC	
LREF =	327.7800 IN.	YMRP =	.0000	IN.YC	
BREF =	2348.0400 IN.	ZMRP =	190.8000	IN.ZC	
SCALE =	.0300				

PARAMETRIC DATA

ALPHAC =	4.000	BETAC =	-5.000
ELV-IB =	.000	ELV-OB =	3.000
ELEVON =	5.000	MACH =	.600
BETAO =	.000	PHI =	7.500
DX =	.000	DY =	10.000

RN/L = 3.32 GRADIENT INTERVAL = .00/ 12.00

ALPHAO = 14.000

DZ	CN-C	CA-C	CLM-C	CY-C	CBL-C	CYN-C	CL-C	CD-C	CSL-C	CLN-C
.000	.26654	.01325	-.09093	.04825	.02017	-.01168	.26213	.04394	.01868	-.01384
3.000	.27280	.01315	-.08995	.04942	.02026	-.01145	.26837	.04450	.01879	-.01383
7.500	.28826	.01317	-.10218	.05037	.01960	-.01063	.28374	.04613	.01823	-.01274
15.000	.31374	.01348	-.11873	.04858	.01717	-.00776	.30905	.04910	.01611	-.00983
30.000	.35513	.01245	-.15326	.04811	.01299	-.00421	.35032	.05240	.01232	-.00566
45.000	.39331	.01046	-.17314	.06289	.01328	-.01069	.37856	.05337	.01193	-.01214
60.000	.40309	.00863	-.18979	.07082	.01359	-.01433	.39842	.05362	.01186	-.01579
GRADIENT	.00294	-.00001	-.00160	.00028	-.00008	.00014	.00292	.00030	-.00007	.00015

CA20 747/1 01 S1 CARRIER DATA (5GN081) (26 NOV 75)

REFERENCE DATA

SREF =	5500.0000 SQ.FT.	XMRP =	1339.9000	IN.XC	
LREF =	327.7800 IN.	YMRP =	.0000	IN.YC	
BREF =	2348.0400 IN.	ZMRP =	190.8000	IN.ZC	
SCALE =	.0300				

PARAMETRIC DATA

ALPHAC =	4.000	BETAC =	-5.000
ELV-IB =	.000	ELV-OB =	3.000
ELEVON =	5.000	MACH =	.600
BETAO =	.000	PHI =	7.500
DX =	10.000	DY =	10.000

RN/L = 3.26 GRADIENT INTERVAL = .00/ 12.00

ALPHAO = 10.000

DZ	CN-C	CA-C	CLM-C	CY-C	CBL-C	CYN-C	CL-C	CD-C	CSL-C	CLN-C
.000	.36470	.00990	-.18934	.06773	.01686	-.01459	.36011	.05077	.01509	-.01639
3.000	.36724	.00993	-.18478	.06760	.01688	-.01476	.36263	.05117	.01508	-.01656
7.500	.37437	.01027	-.18535	.06714	.01632	-.01416	.36968	.05225	.01459	-.01590
15.000	.38651	.01005	-.18933	.06539	.01517	-.01291	.38178	.05330	.01357	-.01454
30.000	.40613	.00867	-.19443	.06565	.01366	-.01216	.40143	.05398	.01216	-.01364
45.000	.42143	.00709	-.20506	.07045	.01347	-.01412	.41682	.05401	.01176	-.01557
60.000	.43754	.00512	-.21800	.07725	.01375	-.01724	.43305	.05374	.01172	-.01870
GRADIENT	.00131	.00006	.00048	-.00008	-.00008	.00006	.00130	.00020	-.00007	.00007

DATE 26 NOV 75 TABULATED SOURCE DATA - CA20

CA20 747/1 01 S1 CARRIER DATA (SGNC81) (26 NOV 75)

REFERENCE DATA

SREF =	5500.0000 SQ.FT.	XMRP =	1339.9000	IN.XC	
LREF =	327.7800 IN.	YMRP =	.0000	IN.YC	
BREF =	2348.0400 IN.	ZMRP =	190.8000	IN.ZC	
SCALE =	.0300				

PARAMETRIC DATA

ALPHAC =	4.000	BETAC =	-5.000
ELV-IB =	.000	ELV-OB =	3.000
ELEVON =	5.000	MACH =	.600
BETAO =	.000	PHI =	7.500
DX =	10.000	DY =	10.000

RN/L = 3.25 GRADIENT INTERVAL = .00/ 12.00

ALPHAO = 14.000

DZ	CN-C	CA-C	CLM-C	CY-C	CBL-C	CYN-C	CL-C	CD-C	CSL-C	CLN-C
.000	.30675	.00673	-.08752	.06071	.01877	-.01396	.30280	.04167	.01705	-.01595
3.000	.30876	.00766	-.08806	.05945	.01915	-.01357	.30471	.04279	.01746	-.01562
7.500	.31635	.00850	-.09365	.05793	.01865	-.01233	.31216	.04443	.01710	-.01433
15.000	.33389	.00985	-.11079	.05355	.01655	-.00688	.32947	.04761	.01537	-.01068
30.000	.36739	.00987	-.15200	.05088	.01271	-.00494	.36279	.05112	.01196	-.00635
45.000	.39071	.00653	-.17035	.06525	.01326	-.01149	.38612	.05222	.01183	-.01292
60.000	.40922	.00702	-.16979	.07152	.01341	-.01445	.40469	.05266	.01167	-.01589
GRADIENT	.00131	.00023	-.00090	-.00037	-.00002	.00022	.00128	.00037	-.00000	.00022

CA20 747/1 01 S1 CARRIER DATA (SGN082) (26 NOV 75)

REFERENCE DATA

SREF =	5500.0000 SQ.FT.	XMRP =	1339.9000	IN.XC	
LREF =	327.7800 IN.	YMRP =	.0000	IN.YC	
BREF =	2348.0400 IN.	ZMRP =	190.8000	IN.ZC	
SCALE =	.0300				

PARAMETRIC DATA

ALPHAC =	8.000	BETAC =	-5.000
ELV-IB =	.000	ELV-OB =	3.000
ELEVON =	5.000	MACH =	.600
BETAO =	.000	PHI =	7.500
DX =	.000	DY =	10.000

RN/L = 3.26 GRADIENT INTERVAL = .00/ 12.00

ALPHAO = 10.000

DZ	CN-C	CA-C	CLM-C	CY-C	CBL-C	CYN-C	CL-C	CD-C	CSL-C	CLN-C
.000	.76164	-.02571	-.30855	.06315	.01671	-.01409	.75365	.10811	.01404	-.01667
3.000	.76339	-.02668	-.30030	.06301	.01679	-.01369	.75554	.10746	.01420	-.01628
7.500	.76769	-.02738	-.29120	.06235	.01640	-.01283	.75990	.10752	.01396	-.01537
15.000	.77735	-.02832	-.27885	.06208	.01598	-.01173	.76958	.10927	.01365	-.01419
30.000	.79371	-.03017	-.27110	.06576	.01534	-.01238	.78601	.10929	.01299	-.01474
45.000	.80555	-.03109	-.26950	.06970	.01522	-.01382	.79882	.11061	.01262	-.01614
60.000	.81655	-.03203	-.26815	.07396	.01498	-.01537	.81073	.11177	.01212	-.01763
GRADIENT	.00082	-.00022	.00229	-.00011	-.00004	.00017	.00084	-.00007	-.00001	.00018

CA20 747/1 01 S1 CARRIER DATA (SGN082) (26 NOV 75)

REFERENCE DATA

SREF =	5500.0000 SQ.FT.	XMRP =	1339.9000 IN.XC		
LREF =	327.7800 IN.	YMRP =	.0000 IN.YC		
BREF =	2348.0400 IN.	ZMRP =	190.8000 IN.ZC		
SCALE =	.0300				

PARAMETRIC DATA

ALPHAC =	8.000	BETAC =	-5.000
ELV-IB =	.000	ELV-OB =	3.000
ELEVCN =	5.000	MACH =	.600
BETAO =	.000	PHI =	7.500
DX =	.000	DY =	10.000

RN/L = 3.28 GRADIENT INTERVAL = .00/ 12.00

ALPHAO = 14.000

DZ	CN-C	CA-C	CLM-C	CY-C	CBL-C	CYN-C	CL-C	CD-C	CSL-C	CLN-C
.000	.67355	-.02445	-.22252	.04984	.02026	-.01216	.66669	.09406	.01788	-.01538
3.000	.68156	-.02494	-.21915	.05046	.01950	-.01154	.67465	.09497	.01734	-.01465
7.500	.69454	-.02540	-.22106	.04939	.01829	-.00944	.68751	.09676	.01641	-.01236
15.000	.71582	-.02639	-.23063	.04755	.01602	-.00643	.70864	.09948	.01470	-.00900
30.000	.74874	-.02838	-.24037	.05268	.01411	-.00599	.74141	.10324	.01289	-.00824
45.000	.77261	-.03015	-.24848	.06577	.01517	-.01217	.76523	.10564	.01287	-.01451
60.000	.79126	-.03120	-.25602	.07026	.01507	-.01394	.78377	.10785	.01246	-.01623
GRADIENT	.00281	-.00013	.00015	-.00007	-.00027	.00037	.00278	.00036	-.00020	.00041

CA20 747/1 01 S1 CARRIER DATA (SGN083) (26 NOV 75)

REFERENCE DATA

SREF =	5500.0000 SQ.FT.	XMRP =	1339.9000 IN.XC		
LREF =	327.7800 IN.	YMRP =	.0000 IN.YC		
BREF =	2348.0400 IN.	ZMRP =	190.8000 IN.ZC		
SCALE =	.0300				

PARAMETRIC DATA

ALPHAC =	8.000	BETAC =	-5.000
ELV-IB =	.000	ELV-OB =	3.000
ELEVCN =	5.000	MACH =	.600
BETAO =	.000	PHI =	7.500
DX =	10.000	DY =	10.000

RN/L = 3.25 GRADIENT INTERVAL = .00/ 12.00

ALPHAO = 10.000

DZ	CN-C	CA-C	CLM-C	CY-C	CBL-C	CYN-C	CL-C	CD-C	CSL-C	CLN-C
.000	.77182	-.02903	-.30695	.06547	.01547	-.01403	.76409	.10760	.01293	-.01639
3.000	.77959	-.02940	-.30165	.06614	.01563	-.01439	.76999	.10755	.01293	-.01577
7.500	.77557	-.02852	-.29319	.06606	.01542	-.01402	.76954	.10793	.01279	-.01637
15.000	.78147	-.02851	-.28021	.06454	.01473	-.01257	.77367	.10879	.01256	-.01483
30.000	.79588	-.02937	-.27421	.06530	.01445	-.01269	.78800	.11045	.01206	-.01489
45.000	.80744	-.03021	-.27052	.07033	.01432	-.01407	.79953	.11163	.01170	-.01623
60.000	.81467	-.03133	-.26116	.07449	.01313	-.01497	.80685	.11178	.01037	-.01691
GRADIENT	.00063	-.00006	.00183	.00007	-.00001	.00001	.00063	.00005	-.00001	.00001

CA20 747/1 01 SI CARRIER DATA (SGN083) (26 NOV 75)

REFERENCE DATA

SREF = 5500.0000 SQ.FT. XMRP = 1339.9000 IN.XC
LREF = 327.7800 IN. YMRP = .0000 IN.YC
BREF = 2548.0400 IN. ZMRP = 190.8000 IN.ZC
SCALE = .0300

PARAMETRIC DATA

ALPHAC =	8.000	BETAC =	-5.000
ELV-IB =	.000	ELV-OB =	3.000
ELEVON =	5.000	MACH =	.600
BETAO =	.000	PHI =	7.500
DX =	10.000	DY =	10.000

RN/L = 3.24 GRADIENT INTERVAL = .00/ 12.00

ALPHAO = 14.000

DZ	CN-C	CA-C	CLM-C	CY-C	CBL-C	CYN-C	CL-C	CD-C	CSL-C	CLN-C
.000	.71067	-.02812	-.21205	.05693	.01767	-.01270	.70388	.09669	.01524	-.01547
3.000	.71314	-.02785	-.20768	.05519	.01716	-.01209	.70626	.09758	.01483	-.01477
7.500	.72267	-.02805	-.21218	.05471	.01630	-.01033	.71568	.09904	.01430	-.01269
15.000	.73699	-.02788	-.21953	.04918	.01406	-.00823	.72975	.10170	.01280	-.00847
30.000	.76055	-.02852	-.23246	.05399	.01291	-.00656	.75306	.10515	.01161	-.00859
45.000	.77951	-.02976	-.24363	.06630	.01425	-.01269	.77195	.10723	.01187	-.01485
60.000	.79483	-.03075	-.25142	.07008	.01376	-.01388	.78721	.10891	.01118	-.01594
GRADIENT	.00164	.00000	-.00009	-.00030	-.00018	.00032	.00161	.00029	-.00012	.00035

CA20 747/1 01 SI CARRIER DATA (SGN084) (26 NOV 75)

REFERENCE DATA

SREF = 5500.0000 SQ.FT. XMRP = 1339.9000 IN.XC
LREF = 327.7800 IN. YMRP = .0000 IN.YC
BREF = 2348.0400 IN. ZMRP = 190.8000 IN.ZC
SCALE = .0300

PARAMETRIC DATA

ALPHAC =	4.000	BETAC =	.000
ELV-IB =	.000	ELV-OB =	3.000
ELEVON =	5.000	MACH =	.600
BETAO =	.000	PHI =	7.500
DX =	.000	DY =	.000

RN/L = 3.18 GRADIENT INTERVAL = .00/ 12.00

ALPHAO = 10.000

DZ	CN-C	CA-C	CLM-C	CY-C	CBL-C	CYN-C	CL-C	CD-C	CSL-C	CLN-C
.000	.32092	.01761	-.10975	-.01979	-.00328	.00769	.31579	.05427	-.00251	.00797
3.000	.33039	.01751	-.11563	-.01518	-.00276	.00545	.32522	.05516	-.00223	.00570
7.500	.34275	.01703	-.13519	-.01223	-.00212	.00403	.33756	.05597	-.00174	.00422
15.000	.36591	.01601	-.15881	-.01042	-.00199	.00330	.36060	.05736	-.00169	.00348
30.000	.39327	.01398	-.18733	-.00923	-.00181	.00336	.38812	.05822	-.00150	.00353
45.000	.41233	.01235	-.19937	-.00711	-.00112	.00219	.40725	.05859	-.00094	.00229
60.000	.43142	.01079	-.20919	-.00459	-.00028	.00064	.42640	.05903	-.00027	.00065
GRADIENT	.00290	-.00008	-.00347	.00098	.00015	-.00047	.00289	.00022	.00010	-.00049

ORIGINAL PAGE IS OF POOR QUALITY

CA20 747/1 01 S1 CARRIER DATA (SGN084) (26 NOV 75)

REFERENCE DATA

SREF = 5500.0000 SQ.FT. XMRP = 1339.9000 IN.XC
LREF = 327.7800 IN. YMRP = .0000 IN.YC
BREF = 2348.0400 IN. ZMRP = 190.8000 IN.ZC
SCALE = .0300

PARAMETRIC DATA

ALPHAC =	4.000	BETAC =	.000
ELV-IB =	.000	ELV-OB =	3.000
ELEVON =	5.000	MACH =	.600
BETAO =	.000	PHI =	7.500
DX =	.000	DY =	.000

RN/L = 3.19 GRADIENT INTERVAL = .00/ 12.00

ALPHAO = 14.000

DZ	CN-C	CA-C	CLM-C	CY-C	CBL-C	CYN-C	CL-C	CD-C	CSL-C	CLN-C
.000	.22507	.01366	.03162	-.03223	-.00516	.01454	.22088	.04032	-.00367	.01493
3.000	.23861	.01401	.01789	-.02656	-.00414	.01152	.23430	.04208	-.00296	.01188
7.500	.25876	.01574	-.01463	-.02009	-.00371	.00807	.25416	.04591	-.00290	.00840
15.000	.29296	.01730	-.06402	-.01191	-.00278	.00387	.27801	.05104	-.00241	.00413
30.000	.34518	.01659	-.13534	-.00953	-.00217	.00360	.34002	.05579	-.00183	.00380
45.000	.37691	.01481	-.16420	-.00682	-.00144	.00230	.37176	.05733	-.00124	.00243
60.000	.39875	.01291	-.18490	-.00616	-.00105	.00173	.39368	.05773	-.00092	.00182
GRADIENT	.00449	.00029	-.00625	.00160	.00019	-.00086	.00444	.00075	.00010	-.00097

CA20 747/1 01 S1 CARRIER DATA (SGN085) (26 NOV 75)

REFERENCE DATA

SREF = 5500.0000 SQ.FT. XMRP = 1339.9000 IN.XC
LREF = 327.7800 IN. YMRP = .0000 IN.YC
BREF = 2348.0400 IN. ZMRP = 190.8000 IN.ZC
SCALE = .0300

PARAMETRIC DATA

ALPHAC =	4.000	BETAC =	.000
ELV-IB =	.000	ELV-OB =	3.000
ELEVON =	5.000	MACH =	.600
BETAO =	.000	PHI =	7.500
DX =	10.000	DY =	.000

RN/L = 3.25 GRADIENT INTERVAL = .00/ 12.00

ALPHAO = 10.000

DZ	CN-C	CA-C	CLM-C	CY-C	CBL-C	CYN-C	CL-C	CD-C	CSL-C	CLN-C
.000	.34024	.01556	-.11322	-.01909	-.00307	.00784	.33522	.05424	-.00229	.00811
3.000	.34414	.01600	-.11696	-.01668	-.00280	.00673	.33905	.05509	-.00214	.00699
7.500	.35320	.01605	-.12836	-.01191	-.00203	.00431	.34805	.05509	-.00162	.00449
15.000	.37043	.01549	-.15520	-.00922	-.00176	.00312	.36525	.05734	-.00148	.00328
30.000	.39655	.01397	-.18517	-.00665	-.00160	.00325	.39138	.05855	-.00130	.00340
45.000	.41342	.01274	-.19750	-.00651	-.00100	.00216	.40829	.05909	-.00082	.00225
60.000	.42756	.01145	-.21108	-.00643	-.00076	.00181	.42249	.05929	-.00062	.00187
GRADIENT	.00175	.00006	-.00206	.00097	.00014	-.00048	.00173	.00024	.00009	-.00049

CA20 747/1 01 SI CARRIER DATA (5GN085) (26 NOV 75)

REFERENCE DATA

SREF =	5500.0000 SQ.FT.	XMRP =	1339.9000 IN.XC		
LREF =	337.7800 IN.	YMRP =	.0000 IN.YC		
BREF =	2348.0400 IN.	ZMRP =	190.8000 IN.ZC		
SCALE =	.0300				

PARAMETRIC DATA

ALPHAC =	4.000	BETAC =	.000
ELV-IB =	.000	ELV-OB =	3.000
ELEVON =	5.000	MACH =	.600
BETAO =	.000	PHI =	7.500
DX =	10.000	DY =	.000

RN/L = 3.26 GRADIENT INTERVAL = .00/ 12.00

ALPHAO = 10.000

DZ	CN-C	CA-C	CLM-C	CY-C	CBL-C	CYN-C	CL-C	CD-C	CSL-C	CLN-C
.000	.27225	.00859	.03924	-.02400	-.00420	.01108	.26435	.03979	-.00308	.01146
3.000	.27229	.01128	.02506	-.02288	-.00429	.01025	.26908	.04299	-.00325	.01064
7.500	.26659	.01385	-.00433	-.01582	-.00329	.00641	.28204	.04694	-.00266	.00671
15.000	.31630	.01483	-.06617	-.01033	-.00244	.00355	.31149	.05102	-.00211	.00378
30.000	.35620	.01446	-.12823	-.00754	-.00182	.00276	.35120	.05482	-.00157	.00293
45.000	.38348	.01327	-.16172	-.00675	-.00142	.00232	.37846	.05649	-.00123	.00245
60.000	.39949	.01281	-.17796	-.00637	-.00110	.00195	.39443	.05770	-.00095	.00204
GRADIENT	.00249	.00089	-.00997	.00113	.00013	-.00064	.00240	.00095	.00008	-.00085

CA20 747/1 01 SI CARRIER DATA (5GN086) (26 NOV 75)

REFERENCE DATA

SREF =	5500.0000 SQ.FT.	XMRP =	1339.9000 IN.XC		
LREF =	337.7800 IN.	YMRP =	.0000 IN.YC		
BREF =	2348.0400 IN.	ZMRP =	190.8000 IN.ZC		
SCALE =	.0300				

PARAMETRIC DATA

ALPHAC =	8.000	BETAC =	.000
ELV-IB =	.000	ELV-OB =	3.000
ELEVON =	5.000	MACH =	.600
BETAO =	.000	PHI =	7.500
DX =	.000	DY =	.000

RN/L = 3.22 GRADIENT INTERVAL = .00/ 12.00

ALPHAO = 10.000

DZ	CN-C	CA-C	CLM-C	CY-C	CBL-C	CYN-C	CL-C	CD-C	CSL-C	CLN-C
.000	.76505	-.02851	-.28455	-.01436	-.00141	.00362	.75673	.10672	-.00086	.00384
3.000	.76790	-.02903	-.27734	-.01366	-.00138	.00383	.75963	.10670	-.00079	.00403
7.500	.77469	-.02996	-.27387	-.01247	-.00133	.00375	.76649	.10697	-.00076	.00395
15.000	.78301	-.03119	-.27096	-.01165	-.00125	.00368	.77489	.10720	-.00069	.00387
30.000	.79681	-.03207	-.26420	-.00926	-.00085	.00298	.78863	.10873	-.00043	.00311
45.000	.80777	-.03180	-.25792	-.00836	.00002	.00265	.79937	.11090	.00037	.00263
60.000	.81 [illegible]	-.03148	-.25644	-.00914	.00140	.00276	.80937	.11299	.00176	.00250
GRADIENT	.00 [illegible]	-.00019	.00137	.00025	.00001	.00001	.00132	.00004	.00001	.00001

CA20 747/1 01 S1 CARRIER DATA (SGN086) (26 NOV 75)

REFERENCE DATA

SREF = 5500.0000 SQ.FT. XMRP = 1339.9000 IN.XC
LREF = 327.7800 IN. YMRP = .0000 IN.YC
BREF = 2348.0400 IN. ZMRP = 190.8000 IN.ZC
SCALE = .0300

PARAMETRIC DATA

ALPHAC =	8.000	BETAC =	.000
ELV-IB =	.000	ELV-OB =	3.000
ELEVON =	5.000	MACH =	.600
BETAO =	.000	PHI =	7.500
DX =	.000	DY =	.000

RN/L = 3.21 GRADIENT INTERVAL = .00/ 12.00

ALPHAO = 14.000

DZ	CN-C	CA-C	CLM-C	CY-C	CBL-C	CYN-C	CL-C	CD-C	CSL-C	CLN-C
.000	.67924	-.02855	-.16928	-.02168	-.00350	.00760	.67224	.09178	-.00223	.00812
3.000	.68929	-.02869	-.17954	-.01846	-.00297	.00642	.68216	.09339	-.00191	.00685
7.500	.70542	-.02946	-.20057	-.01456	-.00232	.00476	.69817	.09543	-.00156	.00511
15.000	.72648	-.03091	-.22094	-.01175	-.00208	.00387	.71917	.09767	-.00148	.00419
30.000	.75696	-.03236	-.23662	-.00969	-.00183	.00328	.74944	.10153	-.00134	.00357
45.000	.77582	-.03268	-.24074	-.00773	-.00113	.00231	.76807	.10449	-.00081	.00250
60.000	.79051	-.03267	-.24162	-.00795	-.00078	.00228	.78254	.10704	-.00047	.00241
GRADIENT	.00350	-.00013	-.00421	.00094	.00016	-.00038	.00347	.00048	.00009	-.00040

CA20 747/1 01 S1 CARRIER DATA (SGN087) (26 NOV 75)

REFERENCE DATA

SREF = 5500.0000 SQ.FT. XMRP = 1339.9000 IN.XC
LREF = 327.7800 IN. YMRP = .0000 IN.YC
BREF = 2348.0400 IN. ZMRP = 190.8000 IN.ZC
SCALE = .0300

PARAMETRIC DATA

ALPHAC =	8.000	BETAC =	.000
ELV-IB =	.000	ELV-OB =	3.000
ELEVON =	5.000	MACH =	.600
BETAO =	.000	PHI =	7.500
DX =	10.000	DY =	.000

RN/L = 3.28 GRADIENT INTERVAL = .00/ 12.00

ALPHAO = 10.000

DZ	CN-C	CA-C	CLM-C	CY-C	CBL-C	CYN-C	CL-C	CD-C	CSL-C	CLN-C
.000	.77014	-.02944	-.28124	-.01312	-.00038	.00364	.76191	.10669	.00016	.00368
3.000	.77085	-.02992	-.27290	-.01202	-.00047	.00356	.76269	.10635	.00005	.00361
7.500	.77439	-.03054	-.26664	-.01133	-.00068	.00350	.76628	.10634	-.00016	.00359
15.000	.77938	-.03115	-.26665	-.01068	-.00048	.00341	.77131	.10661	.00001	.00347
30.000	.78821	-.03161	-.25728	-.00941	-.00024	.00326	.78008	.10769	.00023	.00328
45.000	.79940	-.03102	-.24893	-.00759	.00109	.00275	.79100	.11021	.00145	.00254
60.000	.80873	-.03112	-.24977	-.00907	.00342	.00329	.80021	.11173	.00384	.00267
GRADIENT	.00058	-.00015	.00190	.00023	-.00004	-.00002	.00060	-.00004	-.00004	-.00001

DATE 26 NOV 75 TABULATED SOURCE DATA - CA20

CA20 747/1 01 SI CARRIER DATA (5GN087) (26 NOV 75)

REFERENCE DATA

SREF = 5500.0000 SQ.FT. XMRP = 1339.9000 IN.XC
LREF = 327.7800 IN. YMRP = .0000 IN.YC
BREF = 2348.0400 IN. ZMRP = 190.8000 IN.ZC
SCALE = .0300

PARAMETRIC DATA

ALPHAC =	8.000	BETAC =	.000
ELV-IB =	.000	ELV-OB =	3.000
ELEVON =	5.000	MACH =	.600
BETAO =	.000	PHI =	7.500
DX =	10.000	DY =	.000

RN/L = 3.27 GRADIENT INTERVAL = .00/ 12.00

ALPHAO = 14.000

DZ	CN-C	CA-C	CLM-C	CY-C	CBL-C	CYN-C	CL-C	CD-C	CSL-C	CLN-C
.000	.70625	-.03046	-.15950	-.01875	-.00223	.00670	.69917	.09459	-.00114	.00702
3.000	.70809	-.03012	-.15700	-.01698	-.00241	.00611	.70092	.09525	-.00141	.00646
7.500	.71947	-.03108	-.17541	-.01426	-.00186	.00497	.71229	.09628	-.00107	.00525
15.000	.73364	-.03166	-.19592	-.01180	-.00198	.00406	.72635	.09816	-.00135	.00437
30.000	.75651	-.03268	-.21696	-.00910	-.00184	.00314	.74905	.10113	-.00137	.00344
45.000	.77033	-.03270	-.22333	-.00651	-.00094	.00196	.76266	.10351	-.00069	.00212
60.000	.78369	-.03259	-.22825	-.00770	-.00067	.00233	.77581	.10594	-.00036	.00243
GRADIENT	.00182	-.00009	-.00228	.00060	.00006	-.00023	.00181	.00023	.00001	-.00024

CA20 747/1 01 SI CARRIER DATA (5GN088) (26 NOV 75)

REFERENCE DATA

SREF = 5500.0000 SQ.FT. XMRP = 1339.9000 IN.XC
LREF = 327.7800 IN. YMRP = .0000 IN.YC
BREF = 2348.0400 IN. ZMRP = 190.8000 IN.ZC
SCALE = .0300

PARAMETRIC DATA

ALPHAC =	4.000	BETAC =	.000
ELV-IB =	.000	ELV-OB =	3.000
ELEVON =	5.000	MACH =	.600
BETAO =	.000	PHI =	7.500
DX =	.000	DY =	10.000

RN/L = 3.34 GRADIENT INTERVAL = .00/ 12.00

ALPHAO = 10.000

DZ	CN-C	CA-C	CLM-C	CY-C	CBL-C	CYN-C	CL-C	CD-C	CSL-C	CLN-C
.000	.32763	.01928	-.13047	-.02430	.00479	.00198	.32229	.05663	.00491	.00146
3.000	.33389	.01872	-.12964	-.01968	.00423	.00111	.32857	.05673	.00427	.00065
7.500	.34656	.01818	-.14024	-.01612	.00345	.00106	.34122	.05751	.00349	.00068
15.000	.36630	.01710	-.16353	-.01668	.00178	.00325	.36097	.05850	.00206	.00304
30.000	.39457	.01488	-.18962	-.01582	.00034	.00508	.38932	.05925	.00081	.00500
45.000	.41270	.01305	-.20171	-.01277	-.00045	.00456	.40754	.05933	-.00003	.00457
60.000	.42960	.01131	-.20621	-.00785	-.00152	.00342	.42453	.05937	-.00121	.00356
GRADIENT	.00255	-.00015	-.00139	.00107	-.00018	-.00011	.00255	.00012	-.00019	-.00010

DATE 26 NOV 75 TABULATED SOURCE DATA - CA20

CA20 747/1 01 S1 CARRIER DATA (5GN088) (26 NOV 75)

REFERENCE DATA

SREF =	5500.0000 SQ.FT.	XMRP =	1339.9000 IN.XC
LREF =	327.7800 IN.	YMRP =	.0000 IN.YC
BREF =	2348.0400 IN.	ZMRP =	190.8000 IN.ZC
SCALE =	.0300		

PARAMETRIC DATA

ALPHAC =	4.000	BETAC =	.000
ELV-IB =	.000	ELV-OB =	3.000
ELEVON =	5.000	MACH =	.600
BETAO =	.000	PHI =	7.500
DX =	.000	DY =	10.000

RN/L = 3.32 GRADIENT INTERVAL = .00/ 12.00

ALPHAO = 14.000

DZ	CN-C	CA-C	CLM-C	CY-C	CBL-C	CYN-C	CL-C	CD-C	CSL-C	CLN-C
.000	.23538	.01844	.01267	-.04017	.00879	.00261	.23063	.04615	.00896	.00167
3.000	.24850	.01755	-.00833	-.03437	.00743	.00259	.24377	.04664	.00761	.00179
7.500	.26717	.01679	-.03523	-.02946	.00556	.00348	.26242	.04784	.00584	.00287
15.000	.29969	.01728	-.08125	-.03007	.00259	.00766	.29470	.05172	.00332	.00734
30.000	.34814	.01620	-.14315	-.02480	.00004	.00853	.34301	.05572	.00088	.00848
45.000	.37722	.01484	-.17033	-.01802	-.00043	.00646	.37206	.05740	.00019	.00646
60.000	.39837	.01334	-.18752	-.01276	-.00062	.00456	.39326	.05811	-.00019	.00459
GRADIENT	.00423	-.00022	-.00635	.00140	-.00043	.00012	.00423	.00023	-.00041	.00017

CA20 747/1 01 S1 CARRIER DATA (5GN089) (26 NOV 75)

REFERENCE DATA

SREF =	5500.0000 SQ.FT.	XMRP =	1339.9000 IN.XC
LREF =	327.7800 IN.	YMRP =	.0000 IN.YC
BREF =	2348.0400 IN.	ZMRP =	190.8000 IN.ZC
SCALE =	.0300		

PARAMETRIC DATA

ALPHAC =	4.000	BETAC =	.000
ELV-IB =	.000	ELV-OB =	3.000
ELEVON =	5.000	MACH =	.600
BETAO =	.000	PHI =	7.500
DX =	10.000	DY =	10.000

RN/L = 3.32 GRADIENT INTERVAL = .00/ 12.00

ALPHAO = 10.000

DZ	CN-C	CA-C	CLM-C	CY-C	CBL-C	CYN-C	CL-C	CD-C	CSL-C	CLN-C
.000	.34879	.01608	-.13767	-.01920	.00364	.00137	.34366	.05566	.00371	.00097
3.000	.35286	.01618	-.13780	-.01625	.00310	.00092	.34780	.05619	.00312	.00058
7.500	.36313	.01565	-.14811	-.01408	.00249	.00077	.35797	.05673	.00250	.00050
15.000	.37817	.01520	-.17182	-.01496	.00124	.00287	.37298	.05785	.00148	.00271
30.000	.40102	.01331	-.19339	-.01601	-.00027	.00512	.39589	.05836	.00021	.00511
45.000	.41800	.01195	-.20948	-.01368	-.00089	.00486	.41292	.05879	-.00043	.00492
60.000	.43622	.01101	-.23299	-.01251	-.00129	.00498	.43114	.05976	-.00082	.00508
GRADIENT	.00194	-.00006	-.00146	.00067	-.00015	-.00008	.00193	.00014	-.00016	-.00006

CA20 747/1 01 S1 CARRIER DATA (SGN089) (26 NOV 75)

REFERENCE DATA

SREF = 5500.0000 SQ.FT. XMRP = 1339.9000 IN.XC
LREF = 327.7800 IN. YMRP = .0000 IN.YC
BREF = 2348.0400 IN. ZMRP = 190.8000 IN.ZC
SCALE = .0300

PARAMETRIC DATA

ALPHAC =	4.000	BETAC =	.000
ELV-IB =	.000	ELV-OB =	3.000
ELEVON =	5.000	MACH =	.600
BETAO =	.000	PHI =	7.500
DX =	10.000	DY =	10.000

RN/L = 3.26 GRADIENT INTERVAL = .00/ 12.00

ALPHAO = 14.000

DZ	CN-C	CA-C	CLM-C	CY-C	CBL-C	CYN-C	CL-C	CD-C	CSL-C	CLN-C
.000	.28383	.01216	-.00790	-.02788	.00725	.00068	.27947	.04498	.00723	-.00009
3.000	.28931	.01273	-.01928	-.02397	.00617	.00076	.28486	.04611	.00617	.00010
7.500	.30079	.01351	-.03951	-.02423	.00456	.00295	.29619	.04808	.00479	.00246
15.000	.32675	.01406	-.08701	-.02901	.00165	.00842	.32195	.05135	.00246	.00819
30.000	.36369	.01349	-.14693	-.02198	.00005	.00752	.35875	.05464	.00078	.00747
45.000	.38859	.01242	-.17452	-.01823	-.00085	.00677	.38363	.05618	-.00019	.00681
60.000	.40743	.01142	-.19362	-.01354	-.00090	.00492	.40247	.05715	-.00043	.00498
GRADIENT	.00228	.00018	-.00424	.00044	-.00036	.00032	.00225	.00042	-.00032	.00035

CA20 747/1 01 S1 CARRIER DATA (SGN090) (26 NOV 75)

REFERENCE DATA

SREF = 5500.0000 SQ.FT. XMRP = 1339.9000 IN.XC
LREF = 327.7800 IN. YMRP = .0000 IN.YC
BREF = 2348.0400 IN. ZMRP = 30.8000 IN.ZC
SCALE = .0300

PARAMETRIC DATA

ALPHAC =	8.000	BETAC =	.000
ELV-IB =	.000	ELV-OB =	3.000
ELEVON =	5.000	MACH =	.600
BETAO =	.000	PHI =	7.500
DX =	.000	DY =	10.000

RN/L = 3.27 GRADIENT INTERVAL = .00/ 12.00

ALPHAO = 10.000

DZ	CN-C	CA-C	CLM-C	CY-C	CBL-C	CYN-C	CL-C	CD-C	CSL-C	CLN-C
.000	.76608	-.02904	-.27014	-.01920	.00164	-.00174	.75784	.10638	.00121	-.00197
3.000	.76972	-.03006	-.27200	-.01742	.00127	-.00083	.76160	.10601	.00100	-.00101
7.500	.77559	-.03128	-.27267	-.01803	.00039	.00165	.76760	.10582	.00057	.00158
15.000	.78548	-.03234	-.27606	-.01636	-.00029	.00262	.77753	.10650	.00007	.00266
30.000	.80134	-.03380	-.27185	-.01775	-.00210	.00553	.79339	.10782	-.00121	.00584
45.000	.81264	-.03357	-.26699	-.01369	-.00238	.00412	.80448	.11001	-.00174	.00449
60.000	.82384	-.03255	-.26428	-.00945	-.00254	.00239	.81534	.11295	-.00219	.00282
GRADIENT	.00127	-.00030	-.00032	.00010	-.00017	.00046	.00130	-.00007	-.00009	.00048

ORIGINAL PAGE IS OF POOR QUALITY

CA20 747/1 01 SI CARRIER DATA (5GN090) (26 NOV 75)

REFERENCE DATA

SREF = 5500.0000 SQ.FT. XMRP = 1339.9000 IN.XC
LREF = 327.7800 IN. YMRP = .0000 IN.YC
BREF = 2348.0400 IN. ZMRP = 190.8000 IN.ZC
SCALE = .0300

PARAMETRIC DATA

ALPHAC =	8.000	BETAC =	.000
ELV-IB =	.000	ELV-OB =	3.000
ELEVON =	5.000	MACH =	.600
BETAO =	.000	PHI =	7.500
DX =	.000	DY =	10.000

RN/L = 3.28 GRADIENT INTERVAL = .00/ 12.00

ALPHAO = 14.000

DZ	CN-C	CA-C	CLM-C	CY-C	CBL-C	CYN-C	CL-C	CD-C	CSL-C	CLN-C
.000	.67984	-.02970	-.16339	-.03270	.00553	-.00073	.67303	.09076	.00522	-.00165
3.000	.68728	-.03009	-.17443	-.03165	.00416	.00152	.68043	.09166	.00426	.00080
7.500	.70267	-.03089	-.19789	-.03325	.00211	.00599	.69572	.09354	.00302	.00556
15.000	.72584	-.03230	-.22504	-.03286	-.00021	.00938	.71878	.09618	.00132	.00930
30.000	.75922	-.03357	-.24589	-.02222	-.00143	.00711	.75187	.10073	-.00027	.00727
45.000	.78470	-.03370	-.25021	-.01695	-.00251	.00562	.77699	.10502	-.00160	.00600
60.000	.79701	-.03342	-.25431	-.01287	-.00241	.00392	.78906	.10744	-.00180	.00431
GRADIENT	.00307	-.00016	-.00465	-.00010	-.00046	.00090	.00306	.00038	-.00029	.00097

CA20 747/1 01 SI CARRIER DATA (5GN091) (26 NOV 75)

REFERENCE DATA

SREF = 5500.0000 SQ.FT. XMRP = 1339.9000 IN.XC
LREF = 327.7800 IN. YMRP = .0000 IN.YC
BREF = 2348.0400 IN. ZMRP = 190.8000 IN.ZC
SCALE = .0300

PARAMETRIC DATA

ALPHAC =	8.000	BETAC =	.000
ELV-IB =	.000	ELV-OB =	3.000
ELEVON =	5.000	MACH =	.600
BETAO =	.000	PHI =	7.500
DX =	10.000	DY =	10.000

RN/L = 3.28 GRADIENT INTERVAL = .00/ 12.00

ALPHAO = 10.000

DZ	CN-C	CA-C	CLM-C	CY-C	CBL-C	CYN-C	CL-C	CD-C	CSL-C	CLN-C
.000	.77701	-.03052	-.27427	-.01607	-.00077	-.00145	.76866	.10682	-.00112	-.00127
3.000	.77855	-.03105	-.27272	-.01524	-.00118	-.00053	.77048	.10657	-.00136	-.00029
7.500	.78440	-.03187	-.27369	-.01617	-.00186	.00138	.77638	.10677	-.00170	.00171
15.000	.79003	-.03257	-.27465	-.01542	-.00241	.00229	.78204	.10706	-.00208	.00270
30.000	.80278	-.03298	-.26894	-.01851	-.00421	.00557	.79467	.10887	-.00329	.00624
45.000	.81260	-.03236	-.26216	-.01470	-.00397	.00426	.80423	.11119	-.00328	.00491
60.000	.82921	-.02885	-.24607	-.01185	-.00135	.00459	.81998	.11753	-.00063	.00478
GRADIENT	.00101	-.00018	.00005	-.00003	-.00015	.00038	.00103	-.00000	-.00008	.00040

CA20 747/1 01 S1 CARRIER DATA (SGN091) (26 NOV 75)

REFERENCE DATA

SREF = 5500.0000 SQ.FT. XMRP = 1339.9000 IN.XC
LREF = 327.7800 IN. YMRP = .0000 IN.YC
BREF = 2348.0400 IN. ZMRP = 190.8000 IN.ZC
SCALE = .0300

PARAMETRIC DATA

ALPHAC = 8.000 BETAC = .000
ELV-IB = .000 ELV-OB = 3.000
ELEVON = 5.000 MACH = .600
BETAO = .000 PHI = 7.500
DX = 10.000 DY = 10.000

RN/L = 3.26 GRADIENT INTERVAL = .00/ 12.00

ALPHAO = 14.000

DZ	CN-C	CA-C	CLM-C	CY-C	CBL-C	CYN-C	CL-C	CD-C	CSL-C	CLN-C
.000	.71663	-.03178	-.15715	-.03039	.00194	.00159	.70962	.09510	.00209	.00126
3.000	.72026	-.03200	-.16260	-.02809	.00106	.00232	.71323	.09551	.00134	.00212
7.500	.73199	-.03282	-.18470	-.03118	-.00095	.00668	.72493	.09674	.00012	.00678
15.000	.74718	-.03392	-.20932	-.03148	-.00274	.00913	.74007	.09829	-.00122	.00950
30.000	.76991	-.03421	-.23702	-.02339	-.00375	.00743	.76251	.10195	-.00251	.00800
45.000	.79561	-.03313	-.24222	-.01855	-.00508	.00629	.78763	.10748	-.00402	.00711
60.000	.79981	-.03268	-.24740	-.01531	-.00380	.00462	.79170	.10866	-.00305	.00524
GRADIENT	.00209	-.00014	-.00377	-.00015	-.00039	.00070	.00209	.00022	-.00026	.00076

CA20 747/1 01 S1 CARRIER DATA (SGN092) (26 NOV 75)

REFERENCE DATA

SREF = 5500.0000 SQ.FT. XMRP = 1339.9000 IN.XC
LREF = 327.7800 IN. YMRP = .0000 IN.YC
BREF = 2348.0400 IN. ZMRP = 190.8000 IN.ZC
SCALE = .0300

PARAMETRIC DATA

ALPHAC = 4.000 BETAC = 5.000
ELV-IB = .000 ELV-OB = 3.000
ELEVON = 5.000 MACH = .600
BETAO = .000 PHI = 7.500
DX = .000 DY = 10.000

RN/L = 3.38 GRADIENT INTERVAL = .00/ 12.00

ALPHAC = 10.000

DZ	CN-C	CA-C	CLM-C	CY-C	CBL-C	CYN-C	CL-C	CD-C	CSL-C	CLN-C
.000	.34382	.01214	-.10676	-.11072	-.00835	.01674	.33913	.05079	-.00635	.01769
3.000	.35179	.01220	-.11603	-.10847	-.00947	.01818	.34705	.05168	-.00732	.01924
7.500	.36657	.01181	-.14242	-.10480	-.01031	.01871	.36179	.05284	-.00809	.01985
15.000	.38458	.01035	-.17128	-.10470	-.01170	.02122	.37985	.05326	-.00921	.02250
30.000	.40917	.00775	-.20037	-.10453	-.01353	.02415	.40457	.05325	-.01073	.02561
45.000	.42587	.00669	-.20769	-.09819	-.01359	.02188	.42130	.05394	-.01103	.02335
60.000	.44330	.00645	-.20824	-.08870	-.01333	.01771	.43866	.05552	-.01121	.01918
GRADIENT	.00305	-.00005	-.00484	.00079	-.00026	.00025	.00304	.00027	-.00023	.00028

CA20 747/1 01 S1 CARRIER DATA (SGN092) (26 NOV 75)

REFERENCE DATA

SREF = 5500.0000 SQ.FT. XMRP = 1339.9000 IN.XC
LREF = 327.7800 IN. YMRP = .0000 IN.YC
BREF = 2348.0400 IN. ZMRP = 190.8000 IN.ZC
SCALE = .0300

PARAMETRIC DATA

ALPHAC =	4.000	BETAC =	5.000
ELV-IB =	.000	ELV-OB =	3.000
ELEVON =	5.000	MACH =	.600
BETAO =	.000	PHI =	7.500
DX =	.000	DY =	10.000

RN/L = 3.31 GRADIENT INTERVAL = .00/ 12.00

ALPHAO = 14.000

DZ	CN-C	CA-C	CLM-C	CY-C	CBL-C	CYN-C	CL-C	CD-C	CSL-C	CLN-C
.000	.25980	.00984	.02550	-.11916	-.00502	.01547	.25560	.03970	-.00317	.01608
3.000	.27033	.00918	-.00078	-.11841	-.00687	.01864	.26635	.04016	-.00468	.01943
7.500	.28752	.00984	-.03392	-.11499	-.00902	.02077	.28338	.04261	-.00660	.02177
15.000	.31911	.01096	-.06555	-.11216	-.01132	.02318	.31467	.04703	-.00863	.02441
30.000	.36423	.00978	-.15053	-.10633	-.01293	.02416	.35967	.05057	-.01013	.02555
45.000	.39195	.00844	-.17892	-.10194	-.01359	.02354	.38738	.05214	-.01085	.02500
60.000	.41148	.00736	-.19360	-.09689	-.01354	.02155	.40692	.05311	-.01101	.02302
GRADIENT	.00373	.00001	-.00788	.00057	-.00053	.00069	.00371	.00040	-.00045	.00074

CA20 747/1 01 S1 CARRIER DATA (SGN093) (26 NOV 75)

REFERENCE DATA

SREF = 5500.0000 SQ.FT. XMRP = 1339.9000 IN.XC
LREF = 327.7800 IN. YMRP = .0000 IN.YC
BREF = 2348.0400 IN. ZMRP = 190.8000 IN.ZC
SCALE = .0300

PARAMETRIC DATA

ALPHAC =	4.000	BETAC =	5.000
ELV-IB =	.000	ELV-OB =	3.000
ELEVON =	5.000	MACH =	.600
BETAO =	.000	PHI =	7.500
DX =	10.000	DY =	10.000

RN/L = 3.28 GRADIENT INTERVAL = .00/ 12.00

ALPHAO = 10.000

DZ	CN-C	CA-C	CLM-C	CY-C	CBL-C	CYN-C	CL-C	CD-C	CSL-C	CLN-C
.000	.36574	.00960	-.11753	-.10437	-.00950	.01595	.36119	.05055	-.00758	.01704
3.000	.37007	.00956	-.12611	-.10281	-.01021	.01701	.36550	.05097	-.00817	.01816
7.500	.37813	.00946	-.14923	-.10155	-.01090	.01794	.37352	.05181	-.00876	.01915
15.000	.39315	.00824	-.17579	-.10293	-.01210	.02070	.38860	.05207	-.00957	.02202
30.000	.41448	.00639	-.20645	-.10441	-.01387	.02388	.41000	.05245	-.01108	.02547
45.000	.42744	.00535	-.21154	-.09850	-.01392	.02192	.42300	.05278	-.01135	.02343
60.000	.43939	.00370	-.21685	-.09147	-.01374	.01921	.43506	.05238	-.01145	.02071
GRADIENT	.00180	-.00002	-.00430	.00037	-.00018	.00026	.00180	.00017	-.00016	.00028

CA20 747/1 01 S1 CARRIER DATA (SGN093) (26 NOV 75)

REFERENCE DATA

SREF = 5500.0000 SQ.FT. XMRP = 1339.9000 IN.XC
LREF = 327.7800 IN. YMRP = .0000 IN.YC
BREF = 2348.0400 IN. ZMRP = 190.8000 IN.ZC
SCALE = .0300

PARAMETRIC DATA

ALPHAC =	4.000	BETAC =	5.000
ELV-IB =	.000	ELV-OB =	3.000
ELEVON =	5.000	MACH =	.600
BETAO =	.000	PHI =	7.500
DX =	10.000	DY =	10.000

RN/L = 3.25 GRADIENT INTERVAL = .00/ 12.00

ALPHAO = 14.000

DZ	CN-C	CA-C	CLM-C	CY-C	CBL-C	CYN-C	CL-C	CD-C	CSL-C	CLN-C
.000	.29703	.00463	.01997	-.10898	-.00694	.01481	.29338	.03642	-.00515	.01562
3.000	.30208	.00539	.00308	-.11034	-.00894	.01828	.29832	.03972	-.00678	.01928
7.500	.31614	.00754	-.02951	-.10777	-.01003	.01908	.31208	.04332	-.00777	.02019
15.000	.34113	.00789	-.08790	-.10885	-.01198	.02248	.33689	.04627	-.00936	.02378
30.000	.37614	.00749	-.15023	-.10615	-.01341	.02419	.37175	.04954	-.01061	.02563
45.000	.40070	.00655	-.18106	-.10322	-.01407	.02397	.39628	.05118	-.01128	.02548
60.000	.41482	.00577	-.19566	-.09788	-.01404	.02186	.41041	.05188	-.01147	.02338
GRADIENT	.00259	.00040	-.00665	.00019	-.00040	.00054	.00254	.00066	-.00034	.00058

CA20 747/1 01 S1 CARRIER DATA (SGN094) (26 NOV 75)

REFERENCE DATA

SREF = 5500.0000 SQ.FT. XMRP = 1339.9000 IN.XC
LREF = 327.7800 IN. YMRP = .0000 IN.YC
BREF = 2348.0400 IN. ZMRP = 190.8000 IN.ZC
SCALE = .0300

PARAMETRIC DATA

ALPHAC =	8.000	BETAC =	5.000
ELV-IB =	.000	ELV-OB =	3.000
ELEVON =	5.000	MACH =	.600
BETAO =	.000	PHI =	7.500
DX =	.000	DY =	10.000

RN/L = 3.26 GRADIENT INTERVAL = .00/ 12.00

ALPHAO = 10.000

DZ	CN-C	CA-C	CLM-C	CY-C	CBL-C	CYN-C	CL-C	CD-C	CSL-C	CLN-C
.000	.77228	-.02838	-.26839	-.10344	-.00966	.01241	.76442	.10759	-.00730	.01399
3.000	.77483	-.02962	-.27423	-.10266	-.01102	.01506	.76715	.10681	-.00818	.01693
7.500	.77823	-.03053	-.27818	-.10132	-.01184	.01717	.77066	.10651	-.00862	.01905
15.000	.78510	-.03116	-.28401	-.10164	-.01281	.02009	.77753	.10708	-.00907	.02210
30.000	.79869	-.03103	-.28159	-.09729	-.01289	.02050	.79089	.10957	-.00907	.02251
45.000	.80925	-.03033	-.27877	-.09447	-.01224	.01995	.80127	.11150	-.00852	.02186
60.000	.81917	-.03087	-.27893	-.09249	-.01138	.01958	.81103	.11328	-.00774	.02134
GRADIENT	.00079	-.00028	-.00127	.00028	-.00028	.00062	.00083	-.00014	-.00017	.00065

CA20 747/1 01 S1 CARRIER DATA (SGN094) (26 NOV 75)

REFERENCE DATA

SREF =	5500.0000 SQ.FT.	XMRP =	1339.9000 IN.XC
LREF =	327.7800 IN.	YMRP =	.0000 IN.YC
BREF =	2348.0400 IN.	ZMRP =	190.8000 IN.ZC
SCALE =	.0300		

PARAMETRIC DATA

ALPHAC =	8.000	BETAC =	5.000
ELV-IB =	.000	ELV-OB =	3.000
ELEVON =	5.000	MACH =	.600
BETAO =	.000	PHI =	7.500
DX =	.000	DY =	10.000

RN/L = 3.28 GRADIENT INTERVAL = .00/ 12.00

ALPHAO = 14.000

DZ	CN-C	CA-C	CLM-C	CY-C	CBL-C	CYN-C	CL-C	CD-C	CSL-C	CLN-C
.000	.68392	-.02959	-.15209	-.12240	-.00821	.01774	.67762	.09105	-.00495	.01693
3.000	.69332	-.02964	-.17067	-.12056	-.00979	.02031	.68688	.09264	-.00605	.02178
7.500	.70729	-.02975	-.20055	-.11718	-.01113	.02254	.70066	.09495	-.00659	.02421
15.000	.72665	-.03087	-.22813	-.11070	-.01250	.02303	.71992	.09721	-.00825	.02493
30.000	.75395	-.03041	-.24939	-.10292	-.01242	.02259	.74673	.10241	-.00824	.02448
45.000	.77327	-.02942	-.25581	-.09755	-.01175	.02127	.76558	.10674	-.00782	.02307
60.000	.78757	-.02876	-.26072	-.09467	-.01092	.02048	.77955	.10987	-.00714	.02215
GRADIENT	.00311	-.00002	-.00648	.00070	-.00038	.00063	.00307	.00052	-.00027	.00069

CA20 747/1 01 S1 CARRIER DATA (SGN095) (26 NOV 75)

REFERENCE DATA

SREF =	5500.0000 SQ.FT.	XMRP =	1339.9000 IN.XC
LREF =	327.7800 IN.	YMRP =	.0000 IN.YC
BREF =	2348.0400 IN.	ZMRP =	190.8000 IN.ZC
SCALE =	.0300		

PARAMETRIC DATA

ALPHAC =	8.000	BETAC =	5.000
ELV-IB =	.000	ELV-OB =	3.000
ELEVON =	5.000	MACH =	.600
BETAO =	.000	PHI =	7.500
DX =	10.000	DY =	10.000

RN/L = 3.28 GRADIENT INTERVAL = .00/ 12.00

ALPHAO = 10.000

DZ	CN-C	CA-C	CLM-C	CY-C	CBL-C	CYN-C	CL-C	CD-C	CSL-C	CLN-C
.000	.77240	-.02552	-.26589	-.10176	-.00702	.01429	.76405	.11042	-.00437	.01538
3.000	.77181	-.02582	-.26913	-.10141	-.00734	.01628	.76352	.11003	-.00435	.01739
7.500	.77331	-.02646	-.27180	-.10134	-.00791	.01836	.76511	.10966	-.00454	.01954
15.000	.78072	-.02626	-.27706	-.10421	-.00851	.02183	.77237	.11114	-.00453	.02306
30.000	.79154	-.02616	-.27489	-.10180	-.00694	.02283	.78301	.11312	-.00478	.02412
45.000	.80019	-.02624	-.27332	-.09888	-.00806	.02227	.79154	.11455	-.00401	.02342
60.000	.81797	-.02507	-.27714	-.09829	-.00709	.02263	.80884	.11878	-.00300	.02360
GRADIENT	.00014	-.00013	-.00065	.00005	-.00012	.00054	.00016	-.00010	-.00002	.00055

CA20 747/1 01 SI CARRIER DATA (SGN095) (26 NOV 75)

REFERENCE DATA

SREF = 5500.0000 SQ.FT. XMRP = 1339.9000 IN.XC
LREF = 327.7800 IN. YMRP = .0000 IN.YC
BREF = 2348.0400 IN. ZMRP = 190.8000 IN.ZC
SCALE = .0300

PARAMETRIC DATA

ALPHAC = 8.000 BETAC = 5.000
ELV-IB = .000 ELV-OB = 3.000
ELEVON = 5.000 MACH = .600
BETAO = .000 PHI = 7.500
DX = 10.000 DY = 10.000

RN/L = 3.28 GRADIENT INTERVAL = .00/ 12.00

ALPHAO = 14.000

DZ	CN-C	CA-C	CLM-C	CY-C	CBL-C	CYN-C	CL-C	CD-C	CSL-C	CLN-C
.000	.71547	-.02934	-.15326	-.11437	-.00884	.01823	.70854	.09677	-.00548	.01957
3.000	.71803	-.02957	-.15849	-.11586	-.00990	.02145	.71120	.09700	-.00596	.02293
7.500	.72824	-.03011	-.18950	-.11429	-.01104	.02309	.72135	.09824	-.00681	.02474
15.000	.73912	-.02947	-.20258	-.11077	-.01100	.02434	.73195	.10075	-.00655	.02597
30.000	.75515	-.02651	-.22997	-.10532	-.00868	.02425	.74723	.10646	-.00428	.02547
45.000	.76787	-.02440	-.23846	-.10108	-.00773	.02329	.75939	.11074	-.00351	.02436
60.000	.77963	-.02347	-.24760	-.09829	-.00657	.02264	.77086	.11370	-.00248	.02352
GRADIENT	.00175	-.00010	-.00459	.00004	-.00029	.00063	.00174	.00020	-.00018	.00067

ORIGINAL PAGE IS OF POOR QUALITY

CA20 747/1 01 SI CARRIER DATA (SGN095) (26 NOV 75)

REFERENCE DATA

SREF = 5500.0000 SQ.FT. XMRP = 1339.9000 IN.XC
LREF = 327.7800 IN. YMRP = .0000 IN.YC
BREF = 2348.0400 IN. ZMRP = 190.8000 IN.ZC
SCALE = .0300

PARAMETRIC DATA

ALPHAC = 4.000 BETAC = -5.000
ELV-IB = .000 ELV-OB = 3.000
ELEVON = 5.000 MACH = .600
BETAO = -5.000 PHI = 7.500
DX = .000 DY = 10.000

RN/L = 3.28 GRADIENT INTERVAL = .00/ 12.00

ALPHAO = 10.000

DZ	CN-C	CA-C	CLM-C	CY-C	CBL-C	CYN-C	CL-C	CD-C	CSL-C	CLN-C
.000	.32523	.01364	-.13321	.05874	.01480	-.01168	.32046	.05046	.01334	-.01328
3.000	.33227	.01337	-.13104	.06073	.01494	-.01205	.32749	.05094	.01344	-.01366
7.500	.34248	.01323	-.13699	.06258	.01482	-.01135	.33766	.05186	.01333	-.01355
15.000	.36185	.01228	-.15395	.06423	.01405	-.01188	.35702	.05294	.01257	-.01340
30.000	.39122	.01028	-.17625	.07295	.01428	-.01518	.38644	.05402	.01246	-.01670
45.000	.41054	.00832	-.18990	.07424	.01359	-.01520	.40586	.05410	.01176	-.01655
60.000	.43222	.00646	-.20299	.07022	.01231	-.01345	.42761	.05451	.01068	-.01478
GRADIENT	.00230	-.00005	-.00057	.00050	-.00000	-.00003	.00229	.00019	-.00000	-.00003

CA20 747/1 01 S1 CARRIER DATA (SGN096) (26 NOV 75)

REFERENCE DATA

SREF = 5500.0000 SQ.FT. XMRP = 1339.9000 IN.XC
LREF = 327.7800 IN. YMRP = .0000 IN.YC
BREF = 2348.0400 IN. ZMRP = 190.8000 IN.ZC
SCALE = .0300

PARAMETRIC DATA

ALPHAC =	4.000	BETAC =	-5.000
ELV-IB =	.000	ELV-OB =	3.000
ELEVON =	5.000	MACH =	.600
BETAO =	-5.000	PHI =	7.500
DX =	.000	DY =	10.000

RN/L = 3.28 GRADIENT INTERVAL = .00/ 12.00

ALPHAO = 14.000

DZ	CN-C	CA-C	CLM-C	CY-C	CBL-C	CYN-C	CL-C	CD-C	CSL-C	CLN-C
.000	.24885	.01351	-.06236	.03944	.01675	-.00704	.24452	.04235	.01576	-.00887
3.000	.25232	.01423	-.04651	.04108	.01712	-.00842	.24789	.04343	.01620	-.00829
7.500	.26483	.01437	-.04810	.04566	.01709	-.00714	.26031	.04487	.01609	-.00901
15.000	.29435	.01430	-.08017	.05065	.01565	-.00788	.28968	.04790	.01458	-.00959
30.000	.34203	.01280	-.13297	.05699	.01325	-.00757	.33725	.05139	.01223	-.00903
45.000	.37418	.01100	-.16309	.06944	.01385	-.01310	.36941	.05295	.01225	-.01459
60.000	.39709	.00998	-.18013	.07340	.01374	-.01480	.39241	.05334	.01195	-.01637
GRADIENT	.00218	.00011	.00172	.00084	.00004	-.00003	.00216	.00034	.00004	-.00003

CA20 747/1 01 S1 CARRIER DATA (SGN097) (26 NOV 75)

REFERENCE DATA

SREF = 5500.0000 SQ.FT. XMRP = 1339.9000 IN.XC
LREF = 327.7800 IN. YMRP = .0000 IN.YC
BREF = 2348.0400 IN. ZMRP = 190.8000 IN.ZC
SCALE = .0300

PARAMETRIC DATA

ALPHAC =	8.000	BETAC =	-5.000
ELV-IB =	.000	ELV-OB =	3.000
ELEVON =	5.000	MACH =	.600
BETAO =	-5.000	PHI =	7.500
DX =	.000	DY =	10.000

RN/L = 3.25 GRADIENT INTERVAL = .00/ 12.00

ALPHAO = 10.000

DZ	CN-C	CA-C	CLM-C	CY-C	CBL-C	CYN-C	CL-C	CD-C	CSL-C	CLN-C
.000	.74132	-.02379	-.26131	.05512	.01339	-.01097	.73330	.10648	.01132	-.01302
3.000	.74557	-.02470	-.26149	.05791	.01371	-.01140	.73765	.10632	.01156	-.01349
7.500	.75136	-.02603	-.25902	.06034	.01389	-.01144	.74358	.10602	.01173	-.01356
15.000	.76425	-.02755	-.25896	.06547	.01454	-.01244	.75654	.10675	.01220	-.01466
30.000	.78353	-.02976	-.26171	.07098	.01506	-.01400	.77591	.10792	.01244	-.01629
45.000	.79943	-.03150	-.26538	.07320	.01542	-.01478	.79187	.10897	.01266	-.01712
60.000	.81956	-.03333	-.27720	.07174	.01621	-.01437	.81201	.11066	.01350	-.01685
GRADIENT	.00133	-.00030	.00056	.00068	.00007	-.00006	.00137	-.00006	.00005	-.00007

CA20 747/1 01 S1 CARRIER DATA (SGN097) (26 NOV 75)

REFERENCE DATA

SREF =	5500.0000 SQ.FT.	XMRP =	1339.9000 IN.XC		
LREF =	327.7800 IN.	YMRP =	.0000 IN.YC		
BREF =	2348.0400 IN.	ZMRP =	190.8000 IN.ZC		
SCALE =	.0300				

PARAMETRIC DATA

ALPHAC =	8.000	BETAC =	-5.000
ELV-IB =	.000	ELV-OB =	3.000
ELEVON =	5.000	MACH =	.600
BETAO =	-5.000	PHI =	7.500
DX =	.000	DY =	10.000

RN/L = 3.26 GRADIENT INTERVAL = .00/ 12.00

ALPHAO = 14.000

DZ	CN-C	CA-C	CLM-C	CY-C	CBL-C	CYN-C	CL-C	CD-C	CSL-C	CLN-C
.000	.64288	-.02306	-.16325	.04070	.01690	-.00925	.63623	.09010	.01508	-.01193
3.000	.65372	-.02306	-.17517	.04520	.01696	-.00960	.64691	.09198	.01508	-.01229
7.500	.66904	-.02378	-.18645	.04924	.01640	-.00964	.66212	.09394	.01451	-.01223
15.000	.69410	-.02515	-.20795	.05258	.01515	-.00877	.68704	.09594	.01343	-.01115
30.000	.73336	-.02777	-.23604	.06372	.01521	-.01107	.72616	.10118	.01310	-.01343
45.000	.76086	-.02995	-.24790	.06960	.01555	-.01350	.75362	.10380	.01301	-.01588
60.000	.78764	-.03180	-.25881	.07287	.01603	-.01465	.78032	.10663	.01338	-.01710
GRADIENT	.00348	-.00010	-.00305	.00112	-.00007	-.00005	.00345	.00[illegible]	-.00008	-.00004

CA20 747/1 01 S1 CARRIER DATA (SGN098) (26 NOV 75)

REFERENCE DATA

SREF =	5500.0000 SQ.FT.	XMRP =	1339.9000 IN.XC		
LREF =	327.7800 IN.	YMRP =	.0000 IN.YC		
BREF =	2348.0400 IN.	ZMRP =	190.8000 IN.ZC		
SCALE =	.0300				

PARAMETRIC DATA

ALPHAC =	4.000	BETAC =	.000
ELV-IB =	.000	ELV-OB =	3.000
ELEVON =	5.000	MACH =	.600
BETAO =	-5.000	PHI =	7.500
DX =	.000	DY =	10.000

RN/L = 3.29 GRADIENT INTERVAL = .00/ 12.00

ALPHAO = 10.000

DZ	CN-C	CA-C	CLM-C	CY-C	CBL-C	CYN-C	CL-C	CD-C	CSL-C	CLN-C
.000	.30198	.01769	-.05549	-.02701	.00215	.00385	.29694	.05237	.00249	.00359
3.000	.31176	.01753	-.06689	-.01977	.00209	.00135	.30668	.05323	.00217	.00112
7.500	.33022	.01760	-.10145	-.01742	.00114	.00247	.32504	.05523	.00134	.00232
15.000	.35382	.01695	-.13847	-.01897	-.00059	.00580	.34857	.05705	-.00003	.00582
30.000	.38490	.01547	-.17268	-.01158	-.00078	.00418	.37964	.05882	-.00039	.00423
45.000	.40504	.01410	-.18928	-.00648	-.00037	.00218	.39981	.05957	-.00020	.00220
60.000	.42495	.01368	-.20008	.00086	.00085	-.00119	.41966	.06123	.00067	-.00128
GRADIENT	.00379	-.00001	-.00625	.00122	-.00014	-.00015	.00377	.00039	-.00016	-.00013

CA20 747/1 01 SI CARRIER DATA (SGN098) (26 NOV 75)

REFERENCE DATA

SREF =	5500.0000 SQ.FT.	XMRP =	1339.9000	IN.XC	
LREF =	327.7800	IN.	YMRP =	.0000	IN.YC
BREF =	2348.0400	IN.	ZMRP =	190.8000	IN.ZC
SCALE =	.0300				

PARAMETRIC DATA

ALPHAC =	4.000	BETAC =	.000
ELV-IB =	.000	ELV-OB =	3.000
ELEVON =	5.000	MACH =	.600
BETAO =	-5.000	PHI =	7.500
DX =	.000	DY =	10.000

RN/L = 3.27 GRADIENT INTERVAL = .00/ 12.00

ALPHAO = 14.000

DZ	CN-C	CA-C	CLM-C	CY-C	CBL-C	CYN-C	CL-C	CD-C	CSL-C	CLN-C
.000	.21500	.01599	.05555	-.04889	.00281	.00826	.21062	.04158	.00360	.00791
3.000	.22446	.01603	.04365	-.04131	.00315	.00677	.22002	04261	.00379	.00640
7.500	.24244	.01578	.01578	-.03361	.00282	.00608	.23793	.04425	.00339	.00575
15.000	.27973	.01661	-.04824	-.03002	.00104	.00781	.27493	.04897	.00179	.00765
30.000	.33484	.01672	-.12912	-.02793	-.00186	.01119	.32972	.05484	-.00073	.01132
45.000	.36648	.01605	-.15992	-.01426	-.00086	.00545	.36126	.05748	-.00034	.00550
60.000	.38873	.01487	-.17954	-.00746	-.00023	.00239	.38351	.05863	-.00003	.00240
GRADIENT	.00368	-.00003	-.00537	.00261	-.00000	-.00028	.00367	.00036	-.00003	-.00026

CA20 747/1 01 SI CARRIER DATA (SGN099) (26 NOV 75)

REFERENCE DATA

SREF =	5500.0000 SQ.FT.	XMRP =	1339.9000	IN.XC	
LREF =	327.7800	IN.	YMRP =	.0000	IN.YC
BREF =	2348.0400	IN.	ZMRP =	190.8000	IN.ZC
SCALE =	.0300				

PARAMETRIC DATA

ALPHAC =	8.000	BETAC =	.000
ELV-IB =	.000	ELV-OB =	3.000
ELEVON =	5.000	MACH =	.600
BETAO =	-5.000	PHI =	7.500
DX =	.000	DY =	10.000

RN/L = 3.25 GRADIENT INTERVAL = .00/ 12.00

ALPHAO = 10.000

DZ	CN-C	CA-C	CLM-C	CY-C	CBL-C	CYN-C	CL-C	CD-C	CSL-C	CLN-C
.000	.74778	-.02849	-.22898	-.02120	-.00017	-.00084	.73973	.10374	-.00042	-.00077
3.000	.75342	-.02921	-.24069	-.02252	-.00093	.00218	.74541	.10402	-.00064	.00233
7.500	.75985	-.03022	-.24943	-.02282	-.00171	.00454	.75191	.10414	-.00100	.00479
15.000	.77344	-.03123	-.26036	-.02069	-.00234	.00618	.76547	.10550	-.00133	.00652
30.000	.79225	-.03255	-.26038	-.01046	-.00138	.00297	.78423	.10747	-.00095	.00319
45.000	.80781	-.03298	-.26262	-.00834	-.00143	.00241	.79862	.10975	-.00109	.00265
60.000	.83645	-.02582	-.26611	-.01001	-.00193	.00316	.82658	.12177	-.00145	.00347
GRADIENT	.00159	-.00023	-.00266	-.00020	-.00020	.00070	.00161	.00005	-.00008	.00073

C.12

CA20 747/1 01 SI CARRIER DATA (SGN099) (26 NOV 75)

REFERENCE DATA

SREF =	5500.0000 SQ.FT.	XMRP =	1339.9000	IN.XC	
LREF =	327.7800 IN.	YMRP =	.0000	IN.YC	
BREF =	2348.0400 IN.	ZMRP =	190.8000	IN.ZC	
SCALE =	.0300				

PARAMETRIC DATA

ALPHAC =	8.000	BETAC =	.000
ELV-IB =	.000	ELV-OB =	3.000
ELEVON =	5.000	MACH =	.600
BETAO =	-5.000	PHI =	7.500
DX =	.000	DY =	10.000

RN/L = 3.27 GRADIENT INTERVAL = .00/ 12.00

ALPHAO = 14.000

DZ	CN-C	CA-C	CLM-C	CY-C	CBL-C	CYN-C	CL-C	CD-C	CSL-C	CLN-C
.000	.65542	-.02927	-.12190	-.03630	.00217	.00149	.64891	.08694	.00229	.00112
3.000	.66432	-.02938	-.14456	-.03462	.00120	.00347	.65768	.08837	.00168	.00324
7.500	.68296	-.02971	-.17957	-.03403	.00013	.00690	.67610	.09128	.00122	.00680
15.000	.70808	-.03060	-.21308	-.03117	-.00126	.00917	.70099	.09477	.00024	.00927
30.000	.74874	-.03182	-.24512	-.02085	-.00157	.00767	.74125	.10064	-.00031	.00785
45.000	.77519	-.03239	-.24978	-.01055	-.00068	.00337	.76739	.10467	-.00019	.00346
60.000	.79598	-.03095	-.25390	-.00837	-.00085	.00272	.78762	.10969	-.00047	.00286
GRADIENT	.00371	-.00006	-.00770	.00029	-.00027	.00072	.00366	.00058	-.00014	.00076

CA20 747/1 01 SI CARRIER DATA (SGN100) (26 NOV 75)

REFERENCE DATA

SREF =	5500.0000 SQ.FT.	XMRP =	1339.9000	IN.XC	
LREF =	327.7900 IN.	YMRP =	.0000	IN.YC	
BREF =	2348.0400 IN.	ZMRP =	190.8000	IN.ZC	
SCALE =	.0300				

PARAMETRIC DATA

ALPHAC =	4.000	BETAC =	5.000
ELV-IB =	.000	ELV-OB =	3.000
ELEVON =	5.000	MACH =	.600
BETAO =	-5.000	PHI =	7.500
DX =	.000	DY =	10.000

RN/L = 3.31 GRADIENT INTERVAL = .00/ 12.00

ALPHAO = 10.000

DZ	CN-C	CA-C	CLM-C	CY-C	CBL-C	CYN-C	CL-C	CD-C	CSL-C	CLN-C
.000	.32821	.00851	-.08040	-.12035	-.01322	.02399	.32398	.04555	-.01043	.02541
3.000	.33769	.01041	-.09628	-.11660	-.01386	.02438	.33321	.04643	-.01103	.02587
7.500	.35098	.01182	-.12392	-.10704	-.01376	.02196	.34628	.05122	-.01118	.02345
15.000	.37161	.01168	-.15548	-.09895	-.01367	.02014	.36682	.05324	-.01128	.02163
30.000	.39919	.00980	-.18209	-.09218	-.01341	.01930	.39444	.05425	-.01112	.02077
45.000	.41823	.00831	-.19925	-.09070	-.01330	.01934	.41353	.05476	-.01100	.02079
60.000	.43957	.00734	-.22420	-.09555	-.01362	.02117	.43485	.05602	-.01112	.02265
GRADIENT	.00303	.00043	-.00583	.00180	-.00006	-.00029	.00297	.00075	-.00009	-.00028

ORIGINAL PAGE IS OF POOR QUALITY

CA20 747/1 01 S1 CARRIER DATA (SGN100) (26 NOV 75)

REFERENCE DATA

SREF =	5500.0000 SQ.FT.	XMRP =	1339.9000	IN.XC	
LREF =	327.7800 IN.	YMRP =	.0000	IN.YC	
BREF =	2348.0400 IN.	ZMRP =	190.8000	IN.ZC	
SCALE =	.0300				

PARAMETRIC DATA

ALPHAC =	4.000	BETAC =	5.000
ELV-IB =	.000	ELV-OB =	3.000
ELEVON =	5.000	MACH =	.600
BETAO =	-5.000	PHI =	7.500
DX =	.000	DY =	10.000

RN/L = 3.28 GRADIENT INTERVAL = .00/ 12.00

ALPHAO = 14.000

DZ	CN-C	CA-C	CLM-C	CY-C	CBL-C	CYN-C	CL-C	CD-C	CSL-C	CLN-C
.000	.24818	.00922	.02395	-.13581	-.01198	.02553	.24431	.03789	-.00905	.02681
3.000	.25807	.00885	-.00103	-.13188	-.01269	.02695	.25419	.03855	-.00960	.02830
7.500	.27433	.00923	-.03468	-.12534	-.01366	.02777	.27032	.04063	-.01048	.02922
15.000	.30503	.01147	-.08042	-.11433	-.01430	.02588	.30062	.04607	-.01131	.02740
30.000	.35149	.01174	-.14121	-.09984	-.01371	.02197	.34679	.05119	-.01113	.02346
45.000	.38185	.01036	-.17190	-.09587	-.01360	.02133	.37715	.05299	-.01109	.02281
60.000	.40339	.00906	-.19064	-.09349	-.01359	.02058	.39870	.05395	-.01116	.02206
GRADIENT	.00350	.00001	-.00779	.00140	-.00022	.00029	.00348	.00037	-.00019	.00031

CA20 747/1 01 S1 CARRIER DATA (SGN101) (26 NOV 75)

REFERENCE DATA

SREF =	5500.0000 SQ.FT.	XMRP =	1339.9000	IN.XC	
LREF =	327.7800 IN.	YMRP =	.0000	IN.YC	
BREF =	2348.0400 IN.	ZMRP =	190.8000	IN.ZC	
SCALE =	.0300				

PARAMETRIC DATA

ALPHAC =	8.000	BETAC =	5.000
ELV-IB =	.000	ELV-OB =	3.000
ELEVON =	5.000	MACH =	.600
BETAO =	-5.000	PHI =	7.500
DX =	.000	DY =	10.000

RN/L = 3.25 GRADIENT INTERVAL = .00/ 12.00

ALPHAO = 10.000

DZ	CN-C	CA-C	CLM-C	CY-C	CBL-C	CYN-C	CL-C	CD-C	CSL-C	CLN-C
.000	.74749	-.02377	-.24392	-.11116	-.01024	.01881	.73921	.10782	-.00676	.02039
3.000	.74786	-.02401	-.24903	-.10585	-.01036	.01909	.73962	.10766	-.00583	.02068
7.500	.75130	-.02461	-.25378	-.10075	-.01057	.01889	.74310	.10766	-.00707	.02052
15.000	.76082	-.02524	-.26131	-.09[illegible]51	-.01039	.01815	.75259	.10869	-.00702	.01977
30.000	.77889	-.02656	-.26607	-.09[illegible]2	-.01070	.01918	.77061	.11053	-.00714	.02083
45.000	.79566	-.02748	-.26753	-.08785	-.01053	.01816	.78729	.11253	-.00716	.01980
60.000	.81670	-.02791	-.27345	-.08283	-.01029	.01543	.80809	.11576	-.00710	.01707
GRADIENT	.00053	-.00011	-.00129	.00137	-.00004	.00001	.00054	-.00002	-.00004	.00001

CA20 747/1 01 S1 CARRIER DATA (SGN101) (26 NOV 75)

REFERENCE DATA

SREF =	5500.0000 SQ.FT.	XMRP =	1339.9000	IN.XC	
LREF =	327.7800 IN.	YMRP =	.0000	IN.YC	
BREF =	2348.0400 IN.	ZMRP =	190.8000	IN.ZC	
SCALE =	.0300				

PARAMETRIC DATA

ALPHAC =	8.000	BETAC =	5.000
ELV-IB =	.000	ELV-OB =	3.000
ELEVON =	5.000	MACH =	.600
BETAO =	-5.000	PHI =	7.500
DX =	.000	DY =	10.000

RN/L = 3.27 GRADIENT INTERVAL = .00/ 12.00

ALPHAO = 14.000

DZ	CN-C	CA-C	CLM-C	CY-C	CBL-C	CYN-C	CL-C	CD-C	CSL-C	CLN-C
.000	.66784	-.03040	-.16391	-.13240	-.01208	.02363	.66192	.08746	-.00773	.02546
3.000	.67365	-.02918	-.17651	-.12583	-.01277	.02390	.66763	.08971	-.00837	.02564
7.500	.68722	-.02809	-.19895	-.11725	-.01340	.02378	.68060	.09310	-.00900	.02583
15.000	.70673	-.02798	-.22349	-.10532	-.01321	.02138	.69980	.09660	-.00924	.02343
30.000	.73605	-.02728	-.24285	-.09428	-.01143	.01918	.72855	.10238	-.00787	.02056
45.000	.75979	-.02760	-.25010	-.09070	-.01065	.01902	.75199	.10619	-.00713	.02066
60.000	.78021	-.02790	-.25984	-.08838	-.01044	.01832	.77215	.10944	-.00704	.01993
GRADIENT	.00261	.00030	-.00470	.00201	-.00017	.00002	.00252	.00075	-.00017	.00005

CA20 747/1 01 S1 CARRIER DATA (SGN104) (26 NOV 75)

REFERENCE DATA

SREF =	5500.0000 SQ.FT.	XMRP =	1339.9000	IN.XC	
LREF =	327.7800 IN.	YMRP =	.0000	IN.YC	
BREF =	2348.0400 IN.	ZMRP =	190.8000	IN.ZC	
SCALE =	.0300				

PARAMETRIC DATA

ALPHAC =	4.000	BETAC =	-5.000
ELV-IB =	.000	ELV-OB =	3.000
ELEVON =	5.000	MACH =	.600
BETAO =	-5.000	PHI =	.000
DX =	10.000	DY =	.000

RN/L = 3.30 GRADIENT INTERVAL = .00/ 12.00

ALPHAC = 10.000

DZ	CN-C	CA-C	CLM-C	CY-C	CBL-C	CYN-C	CL-C	CD-C	CSL-C	CLN-C
.000	.35158	.00904	-.09440	.09368	.01028	-.01557	.34715	.04864	.00844	-.01668
3.000	.35021	.00943	-.09168	.09456	.01163	-.01914	.34574	.04869	.00941	-.02037
7.500	.36248	.00989	-.12183	.08916	.01171	-.01784	.35790	.05063	.00962	-.01908
15.000	.37722	.00981	-.14947	.08713	.01206	-.01815	.37256	.05209	.00994	-.01943
30.000	.40003	.00817	-.17765	.08474	.01278	-.01845	.39542	.05284	.01062	-.01980
45.000	.41655	.00705	-.19408	.08448	.01346	-.01691	.41197	.05345	.01125	-.02033
60.000	.43458	.00576	-.21247	.08449	.01423	-.01961	.43004	.05406	.01195	-.02111
GRADIENT	.00155	.00011	-.00390	-.00065	.00018	-.00026	.00153	.00027	.00015	-.00027

CA20 747/1 01 S1 CARRIER DATA (SGN104) (26 NOV 75)

REFERENCE DATA

SREF =	5500.0000 SQ.FT.	XMRP =	1339.9000 IN.XC		
LREF =	327.7800 IN.	YMRP =	.0000 IN.YC		
BREF =	2348.0400 IN.	ZMRP =	190.8000 IN.ZC		
SCALE =	.0300				

PARAMETRIC DATA

ALPHAC =	4.000	BETAC =	-5.000
ELV-IB =	.000	ELV-OB =	3.000
ELEVON =	5.000	MACH =	.609
BETAO =	-5.000	PHI =	.000
DX =	10.000	DY =	.000

RN/L = 3.28 GRADIENT INTERVAL = .00/ 12.00

ALPHAO = 14.000

DZ	CN-C	CA-C	CLM-C	CY-C	CBL-C	CYN-C	CL-C	CD-C	CSL-C	CLN-C
.000	.27669	.00702	.03886	.08288	.00757	-.00893	.27308	.03883	.00643	-.00978
3.000	.28109	.00713	.02460	.09169	.00598	-.01661	.27724	.03938	.00803	-.01768
7.500	.29436	.00843	-.00772	.09075	.01141	-.01847	.29031	.04205	.00926	-.01968
15.000	.32001	.01003	-.06422	.08558	.01199	-.01739	.31565	.04633	.00994	-.01866
30.000	.35721	.01018	-.12853	.07823	.01155	-.01486	.35263	.05037	.00977	-.01610
45.000	.38330	.00877	-.16047	.08284	.01305	-.01826	.37872	.05170	.01091	-.01964
60.000	.40092	.00762	-.18050	.08303	.01346	-.01686	.39637	.05239	.01126	-.02028
GRADIENT	.00238	.00020	-.00629	.00095	.00050	-.00120	.00235	.00044	.00037	-.00125

CA20 747/1 01 S1 CARRIER DATA (SGN105) (26 NOV 75)

REFERENCE DATA

SREF =	5500.0000 SQ.FT.	XMRP =	1339.9000 IN.XC		
LREF =	327.7800 IN.	YMRP =	.0000 IN.YC		
BREF =	2348.0400 IN.	ZMRP =	190.8000 IN.ZC		
SCALE =	.0300				

PARAMETRIC DATA

ALPHAC =	8.000	BETAC =	-5.000
ELV-IB =	.000	ELV-OB =	3.000
ELEVON =	5.000	MACH =	.600
BETAO =	-5.000	PHI =	.000
DX =	10.000	DY =	.000

RN/L = 3.26 GRADIENT INTERVAL = .00/ 12.00

ALPHAO = 10.000

DZ	CN-C	CA-C	CLM-C	CY-C	CBL-C	CYN-C	CL-C	CD-C	CSL-C	CLN-C
.000	.76706	-.02983	-.25825	.08870	.01191	-.01540	.75970	.10500	.00909	-.01712
3.000	.76778	-.03018	-.26113	.08547	.01252	-.01604	.76047	.10478	.00958	-.01785
7.500	.77211	-.03023	-.26594	.08016	.01224	-.01441	.76474	.10548	.00959	-.01621
15.000	.77854	-.03102	-.26149	.07751	.01267	-.01478	.77131	.10584	.00995	-.01665
30.000	.79604	-.03283	-.26830	.08050	.01451	-.01733	.78876	.10707	.01132	-.01947
45.000	.80960	-.03337	-.26439	.07775	.01483	-.01632	.80221	.10890	.01181	-.01854
60.000	.82554	-.03442	-.26700	.07757	.01581	-.01676	.81809	.11063	.01270	-.01913
GRADIENT	.00070	-.00005	-.00103	-.00114	.00004	.00015	.00069	.00007	.00006	.00014

CA20 747/1 01 S1 CARRIER DATA (SGN105) (26 NOV 75)

REFERENCE DATA

SREF =	5500.0000 SQ.FT.	XMRP =	1339.9000	IN.XC	
LREF =	327.7800 IN.	YMRP =	.0000	IN.YC	
BREF =	2348.0400 IN.	ZMRP =	190.8000	IN.ZC	
SCALE =	.0300				

PARAMETRIC DATA

ALPHAC =	8.000	BETAC =	-5.000
ELV-IB =	.000	ELV-OB =	3.000
ELEVON =	5.000	MACH =	.600
BETAO =	-5.000	PHI =	.000
DX =	10.000	DY =	.000

RN/L = 3.32 GRADIENT INTERVAL = .00/ 12.00

ALPHAO = 14.000

DZ	CN-C	CA-C	CLM-C	CY-C	CBL-C	CYN-C	CL-C	CD-C	CSL-C	CLN-C
.000	.69798	-.03061	-.14182	.09912	.01141	-.01816	.69181	.09223	.00812	-.01975
3.000	.70045	-.03009	-.15529	.09679	.01267	-.02026	.69415	.09317	.00900	-.02204
7.500	.71323	-.02986	-.18048	.08987	.01280	-.01857	.70670	.09561	.00942	-.02040
15.000	.72873	-.03025	-.20580	.08442	.01317	-.01732	.72202	.09792	.01000	-.01923
30.000	.75462	-.03184	-.23314	.08126	.01435	-.01720	.74780	.10085	.01119	-.01932
45.000	.77549	-.03268	-.24462	.07922	.01484	-.01691	.76850	.10365	.01172	-.01912
60.000	.79244	-.03336	-.25326	.07824	.01536	-.01671	.78531	.10593	.01226	-.01901
GRADIENT	.00210	.00010	-.00519	-.00126	.00017	-.00002	.00205	.00046	.00017	-.00005

CA20 747/1 01 S1 CARRIER DATA (SGN106) (26 NOV 75)

REFERENCE DATA

SREF =	5500.0000 SQ.FT.	XMRP =	1339.9000	IN.XC	
LREF =	327.7800 IN.	YMRP =	.0000	IN.YC	
BREF =	2348.0400 IN.	ZMRP =	190.8000	IN.ZC	
SCALE =	.0300				

PARAMETRIC DATA

ALPHAC =	4.000	BETAC =	-5.000
ELV-IB =	.000	ELV-OB =	3.000
ELEVON =	5.000	MACH =	.600
BETAO =	-5.000	PHI =	.000
DX =	.000	DY =	10.000

RUN NO. 0/ 0 RN/L = 3.31 GRADIENT INTERVAL = .00/ 12.00

ALPHAO	DZ	CN-C	CA-C	CLM-C	CY-C	CBL-C	CYN-C	CL-C	CD-C	CSL-C	CLN-C
10.000	.000	.31105	.01330	-.14330	.06543	.01862	-.01512	.30640	.04865	.01678	-.01710
10.000	3.000	.31682	.01298	-.13709	.06747	.01848	-.01580	.31217	.04893	.01657	-.01776
10.000	7.500	.32861	.01262	-.14380	.06828	.01759	-.01558	.32393	.04981	.01571	-.01745
10.000	15.000	.34906	.01181	-.15834	.06664	.01594	-.01383	.34435	.05113	.01425	-.01554
10.000	30.000	.37692	.00977	-.17832	.06905	.01462	-.01362	.37227	.05202	.01296	-.01519
10.000	45.000	.39516	.00763	-.18995	.07198	.01397	-.01439	.39163	.05190	.01223	-.01588
10.000	60.000	.41522	.00564	-.20257	.07479	.01330	-.01508	.41079	.05191	.01149	-.01650
	GRADIENT	.00236	-.00009	-.00018	.00024	-.00014	-.00005	.00236	.00016	-.00015	-.00004

CA20 747/1 01 SI CARRIER DATA (SGN107) (26 NOV 75)

REFERENCE DATA

SREF = 5500.0000 SQ.FT. XMRP = 1339.9000 IN.XC
LREF = 327.7800 IN. YMRP = .0000 IN.YC
[illegible] = 2348.0400 IN. ZMRP = 190.8000 IN.ZC
SCALE = .0300

PARAMETRIC DATA

ALPHAC =	4.000	BETAC =	-5.000
ELV-IB =	.000	ELV-OB =	3.000
ELEVON =	5.000	MACH =	.600
BETAO =	-5.000	PHI =	7.500
DX =	10.000	DY =	10.000

RN/L = 3.25 GRADIENT INTERVAL = .00/ 12.00

ALPHAO = 10.000

DZ	CN-C	CA-C	CLM-C	CY-C	CBL-C	CYN-C	CL-C	CD-C	CSL-C	CLN-C
.000	.73042	-.03104	-.24478	-.14633	-.01798	.02551	.71977	.10487	-.01378	.02793
3.000	.73079	-.03128	-.24988	-.14102	-.01810	.02578	.72017	.10470	-.01383	.02823
7.500	.73422	-.03188	-.25463	-.13592	-.01832	.02558	.72366	.10470	-.01407	.02807
15.000	.74375	-.03251	-.26217	-.12968	-.01813	.02485	.73315	.10573	-.01402	.02731
30.000	.76181	-.03383	-.26693	-.12619	-.01844	.02588	.75117	.10757	-.01415	.02838
45.000	.77858	-.03475	-.26939	-.12301	-.01827	.02486	.76764	.10957	-.01416	.02735
60.000	.79363	-.03518	-.27431	-.11800	-.01804	.02213	.78864	.11281	-.01440	.02461
GRADIENT	.00053	-.00011	-.00129	.00137	-.00004	.00001	.00054	-.00002	-.00004	.00001

RN/L = 3.27 GRADIENT INTERVAL = .00/ 12.00

ALPHAO = 14.000

DZ	CN-C	CA-C	CLM-C	CY-C	CBL-C	CYN-C	CL-C	CD-C	CSL-C	CLN-C
.000	.65077	-.03767	-.16477	-.16757	-.01982	.03033	.64247	.08451	-.01474	.03300
3.000	.65677	-.03645	-.17737	-.16100	-.02051	.03060	.64818	.08675	-.01537	.03339
7.500	.67014	-.03536	-.19981	-.15242	-.02114	.03048	.66116	.09014	-.01601	.03338
15.000	.68966	-.03525	-.22435	-.14049	-.02096	.02808	.68036	.09364	-.01624	.03098
30.000	.71898	-.03455	-.24370	-.12945	-.01917	.02588	.70911	.09942	-.01487	.02851
45.000	.74272	-.03487	-.25096	-.12587	-.01839	.02572	.73254	.10323	-.01413	.02821
60.000	.76314	-.03517	-.25970	-.12355	-.01818	.02501	.75271	.10648	-.01404	.02748
GRADIENT	.00261	.00030	-.00470	.00201	-.00017	.00002	.00252	.00075	-.00017	.00005

CA20 747/1 01 S1 CARRIER DATA (SGN108) (26 NOV 75)

REFERENCE DATA

SREF =	5500.0000 SQ.FT.	XMRP =	1339.9000 IN.XC		
LREF =	327.7800 IN.	YMRP =	.0000 IN.YC		
BREF =	2348.0400 IN.	ZMRP =	190.8000 IN.ZC		
SCALE =	.0300				

PARAMETRIC DATA

ALPHAC =	8.000	BETAC =	-5.000
ELV-IB =	.000	ELV-OB =	3.000
ELEVON =	5.000	MACH =	.600
BETAO =	-5.000	PHI =	.000
DX =	10.000	DY =	10.000

RN/L = 3.24 GRADIENT INTERVAL = .00/ 12.00

ALPHAO = 10.000

DZ	CN-C	CA-C	CLM-C	CY-C	CBL-C	CYN-C	CL-C	CD-C	CSL-C	CLN-C
.000	.76629	-.02805	-.27467	.06768	.01377	-.01344	.75922	.10672	.01126	-.01551
3.000	.76727	-.02843	-.27035	.06830	.01443	-.01413	.75967	.10641	.01180	-.01631
7.500	.77150	-.02873	-.26919	.06827	.01452	-.01366	.76389	.10685	.01196	-.01586
15.000	.77954	-.02982	-.26530	.06924	.01472	-.01368	.77199	.10717	.01216	-.01592
30.000	.79446	-.03099	-.26746	.07250	.01526	-.01493	.78689	.10861	.01247	-.01724
45.000	.80848	-.03251	-.26392	.07334	.01539	-.01476	.80096	.10955	.01263	-.01710
60.000	.82319	-.03397	-.26321	.07524	.01578	-.01520	.81570	.11067	.01294	-.01759
GRADIENT	.00064	-.00009	.00069	.00007	.00009	-.00002	.00065	.00002	.00009	-.00003

RN/L = 3.26 GRADIENT INTERVAL = .00/ 12.00

ALPHAO = 14.000

DZ	CN-C	CA-C	CLM-C	CY-C	CBL-C	CYN-C	CL-C	CD-C	CSL-C	CLN-C
.000	.69548	-.02748	-.17751	.06608	.01715	-.01555	.68880	.09488	.01422	-.01818
3.000	.69989	-.02723	-.18326	.06661	.01718	-.01571	.69310	.09589	.01423	-.01834
7.500	.71084	-.02783	-.19854	.06681	.01691	-.01517	.70399	.09720	.01406	-.01777
15.000	.72768	-.02782	-.21719	.06178	.01554	-.01123	.72057	.10013	.01339	-.01365
30.000	.75407	-.02924	-.23205	.06432	.01510	-.01124	.74681	.10332	.01296	-.01357
45.000	.77514	-.03082	-.24479	.06978	.01551	-.01332	.76783	.10542	.01300	-.01570
60.000	.79175	-.03203	-.25028	.07273	.01554	-.01462	.78440	.10712	.01280	-.01699
GRADIENT	.00208	-.00005	-.00285	.00009	-.00003	.00006	.00206	.00031	-.00002	.00006

ORIGINAL PAGE IS OF POOR QUALITY

CA20 747/1 01 S1 CARRIER DATA (SGN109) (26 NOV 75)

REFERENCE DATA

SREF =	5500.0000 SQ.FT.	XMRP =	1339.9000 IN.XC		
LREF =	327.7800 IN.	YMRP =	.0000 IN.YC		
BREF =	2348.0400 IN.	ZMRP =	190.8000 IN.ZC		
SCALE =	.0300				

PARAMETRIC DATA

ALPHAC =	4.000	BETAC =	.000
ELV-IB =	.000	ELV-OB =	3.000
ELEVON =	5.000	MACH =	.600
BETAO =	-5.000	PHI =	.000
DX =	10.000	DY =	.000

RN/L = 3.27 GRADIENT INTERVAL = .00/ 12.00

ALPHAO = 10.000

DZ	CN-C	CA-C	CLM-C	CY-C	CBL-C	CYN-C	CL-C	CD-C	CSL-C	CLN-C
.000	.33921	.01511	-.09908	-.01323	-.00524	.00630	.33424	.05369	-.00460	.00681
3.000	.34246	.01588	-.10081	-.01136	-.00474	.00606	.33739	.05480	-.00413	.00652
7.500	.35414	.01615	-.12235	-.00685	-.00392	.00374	.34897	.05629	-.00346	.00411
15.000	.37075	.01579	-.15116	-.00151	-.00259	.00065	.36553	.05766	-.00285	.00091
30.000	.39637	.01417	-.18209	-.00044	-.00162	-.00014	.39118	.05873	-.00168	.00002
45.000	.41211	.01308	-.19922	-.00079	-.00090	-.00025	.40695	.05930	-.00098	-.00017
60.000	.42980	.01191	-.21879	-.00128	-.00021	-.00027	.42466	.05998	-.00029	-.00026
GRADIENT	.00204	.00013	-.00323	.00086	.00319	-.00036	.00201	.00035	.00015	-.00037

RN/L = 3.28 GRADIENT INTERVAL = .00/ 12.00

ALPHAO = 14.000

DZ	CN-C	CA-C	CLM-C	CY-C	CBL-C	CYN-C	CL-C	CD-C	CSL-C	CLN-C
.000	.26737	.01018	.03147	-.01789	-.00713	.00926	.26331	.04128	-.00618	.00954
3.000	.27154	.01133	.02349	-.01352	-.00610	.00757	.26733	.04286	-.00533	.00816
7.500	.28576	.01341	-.00579	-.00859	-.00492	.00528	.28126	.04641	-.00440	.00576
15.000	.31434	.01521	-.06555	-.00165	-.00312	.00127	.30950	.05120	-.00302	.00159
30.000	.35399	.01516	-.13203	.00195	-.00146	-.00124	.34894	.05528	-.00163	-.00108
45.000	.38038	.01397	-.16273	-.00025	-.00100	-.00042	.37530	.05686	-.00109	-.00032
60.000	.39770	.01301	-.18236	-.00186	-.00065	.00016	.39262	.05772	-.00069	.00022
GRADIENT	.00251	.00043	-.00509	.00123	.00029	-.00053	.00245	.00069	.00023	-.00056

CA20 747/1 01 S1 CARRIER DATA (SGNIIO) (26 NOV 75)

REFERENCE DATA

SREF = 5500.0000 SQ.FT. XMRP = 1339.9000 IN.XC
CREF = 327.7800 IN. YMRP = .0000 IN.YC
BREF = 2348.0400 IN. ZMRP = 190.8000 IN.ZC
SCALE = .0300

PARAMETRIC DATA

ALPHAC =	8.000	BETAC =	.000
ELV-IB =	.000	ELV-OB =	3.000
ELEVON =	5.000	MACH =	.600
BETAO =	-5.000	PHI =	.000
DX =	10.000	DY =	.000

RN/L = 3.28 GRADIENT INTERVAL = .00/ 12.00

ALPHAO = 10.000

DZ	CN-C	CA-C	CLM-C	CY-C	CBL-C	CYN-C	CL-C	CD-C	CSL-C	CLN-C
.000	.77107	-.03112	-.26942	-.00789	-.00333	.00212	.76312	.10520	-.00302	.00269
3.000	.77256	-.03149	-.26675	-.00570	-.00287	.00157	.76465	.10509	-.00265	.00207
7.500	.77665	-.03212	-.26893	-.00383	-.00222	.00099	.77075	.10553	-.00212	.00139
15.000	.78849	-.03339	-.26956	-.00158	-.00151	.00024	.78066	.10599	-.00155	.00052
30.000	.80243	-.03415	-.26609	-.00189	-.00106	.00023	.79453	.10766	-.00111	.00043
45.000	.81326	-.03418	-.26233	-.00163	-.00039	-.00000	.80520	.10951	-.00048	.00009
60.000	.82533	-.03439	-.25955	-.00175	.00018	-.00008	.81712	.11140	.00006	-.00009
GRADIENT	.00104	-.00013	.00002	.00053	.00015	-.00015	.00104	.00005	.00012	-.00017

RN/L = 3.29 GRADIENT INTERVAL = .00/ 12.00

ALPHAO = 14.000

DZ	CN-C	CA-C	CLM-C	CY-C	CBL-C	CYN-C	CL-C	CD-C	CSL-C	CLN-C
.000	.70434	-.03166	-.16303	-.01365	-.00504	.00549	.69750	.09308	-.00411	.00631
3.000	.71165	-.03133	-.17439	-.01143	-.00433	.00511	.70464	.09468	-.00348	.00581
7.500	.72309	-.03200	-.19285	-.00310	-.00320	.00122	.71602	.09600	-.00304	.00178
15.000	.73901	-.03286	-.21706	.00056	-.00208	-.00059	.73185	.09792	-.00226	-.00019
30.000	.76468	-.03427	-.23908	.00036	-.00142	-.00120	.75737	.10098	-.00171	-.00090
45.000	.78458	-.03471	-.24691	-.00250	-.00113	.00034	.77705	.10401	-.00116	.00055
60.000	.79948	-.03495	-.25268	-.00470	-.00091	.00103	.79176	.10636	-.00082	.00120
GRADIENT	.00250	-.00005	-.00399	.00144	.00025	-.00059	.00247	.00039	.00014	-.00063

CA20 747/1 01 S1 CARRIER DATA (SGN111) (26 NOV 75)

REFERENCE DATA

SREF =	5500.0000 SQ.FT.	XMRP =	1339.9000	IN.XC	
LREF =	327.7800 IN.	YMRP =	.0000	IN.YC	
BREF =	2348.0400 IN.	ZMRP =	190.8000	IN.ZC	
SCALE =	.0300				

PARAMETRIC DATA

ALPHAC =	4.000	BETAC =	.000
ELV-IB =	.000	ELV-OB =	3.000
ELEVON =	5.000	MACH =	.600
BETAO =	-5.000	PHI =	.000
DX =	.000	DY =	10.000

RUN NO. 0/ 0 RN/L = 3.33 GRADIENT INTERVAL = .00/ 12.00

ALPHAO	DZ	CN-C	CA-C	CLM-C	CY-C	CBL-C	CYN-C	CL-C	CD-C	CSL-C	CLN-C
10.000	.000	.28889	.01765	-.06180	-.01456	.00600	-.00450	.28393	.05095	.00545	-.00511
10.000	3.000	.29835	.01789	-.07724	-.01449	.00492	-.00229	.29391	.05225	.00460	-.00280
10.000	7.500	.31443	.01776	-.10112	-.01638	.00302	.00106	.30932	.05374	.00305	.00073
10.000	15.000	.33775	.01657	-.13583	-.01864	.00119	.00469	.33264	.05469	.00162	.00453
10.000	30.000	.37023	.01482	-.17229	-.01424	.00003	.00481	.36512	.05565	.00048	.00477
10.000	45.000	.39038	.01293	-.19131	-.01017	-.00017	.00355	.38535	.05697	.00015	.00354
10.000	60.000	.41056	.01120	-.21153	-.00615	-.00038	.00236	.40560	.05726	-.00018	.00238
	GRADIENT	.00341	.00001	-.00525	-.00026	-.00040	.00074	.00339	.00037	-.00032	.00078

CA20 747/1 01 S1 CARRIER DATA (SGN112) (26 NOV 75)

REFERENCE DATA

SREF =	5500.0000 SQ.FT.	XMRP =	1339.9000	IN.XC	
LREF =	327.7800 IN.	YMRP =	.0000	IN.YC	
BREF =	2348.0400 IN.	ZMRP =	190.8000	IN.ZC	
SCALE =	.0300				

PARAMETRIC DATA

ALPHAC =	4.000	BETAC =	.000
ELV-IB =	.000	ELV-OB =	3.000
ELEVON =	5.000	MACH =	.600
BETAO =	-5.000	PHI =	.000
DX =	10.000	DY =	10.000

RN/L = 3.28 GRADIENT INTERVAL = .00/ 12.00

ALPHAO = 10.000

DZ	CN-C	CA-C	CLM-C	CY-C	CBL-C	CYN-C	CL-C	CD-C	CSL-C	CLN-C
.000	.32201	.01546	-.08439	-.01051	.00389	-.00353	.31709	.05224	.00344	-.00392
3.000	.32674	.01550	-.08886	-.01025	.00302	-.00221	.32179	.05288	.00272	-.00252
7.500	.34032	.01538	-.11621	-.01256	.00174	.00096	.33532	.05408	.00177	.00076
15.000	.35721	.01443	-.14496	-.01475	.00040	.00379	.35221	.05490	.00074	.00372
30.000	.38370	.01313	-.17912	-.01690	-.00014	.00340	.37869	.05638	.00016	.00339
45.000	.39916	.01178	-.19820	-.00926	-.00025	.00305	.39421	.05665	.00002	.00305
60.000	.41599	.01060	-.22031	-.00705	-.00030	.00254	.41106	.05724	-.00008	.00255
GRADIENT	.00249	-.00001	-.00439	-.00029	-.00029	.00061	.00248	.00025	-.00022	.00063

DATE 26 NOV 75

TABULATED SOURCE DATA - CA20

CA20 747/1 01 S1

CARRIER DATA (SGN112) (26 NOV 75)

REFERENCE DATA

SREF =	5500.0000 SQ.FT.	XMRP =	1339.9000	IN.XC
LREF =	327.7800 IN.	YMRP =	.0000	IN.YC
BREF =	2348.0400 IN.	ZMRP =	190.8000	IN.ZC
SCALE =	.0300			

PARAMETRIC DATA

ALPHAC =	4.000	BETAC =	.000
ELV-IB =	.000	ELV-OB =	3.000
ELEVON =	5.000	MACH =	.600
BETAO =	-5.000	PHI =	.000
DX =	10.000	DY =	10.000

RN/L = 3.24 GRADIENT INTERVAL = .00/ 12.00

ALPHAO = 14.000

DZ	CN-C	CA-C	CLM-C	CY-C	CBL-C	CYN-C	CL-C	CD-C	CSL-C	CLN-C
.000	.26481	.01100	.04820	-.01568	.00688	-.00612	.26067	.04183	.00615	-.00681
3.000	.27169	.01215	.03219	-.01563	.00620	-.00400	.26739	.04370	.00570	-.00464
7.500	.28636	.01383	-.00130	-.01872	.00449	.00055	.28181	.04690	.00447	.00007
15.000	.31399	.01491	-.06186	-.02140	.00219	.00484	.30918	.05086	.00263	.00457
30.000	.35493	.01451	-.13188	-.02299	-.00073	.00875	.34993	.05474	.00014	.00877
45.000	.38162	.01368	-.16129	-.01462	-.00019	.00537	.37657	.05670	.00032	.00535
60.000	.40058	.01271	-.18318	-.01062	-.00013	.00371	.39552	.05772	.00021	.00370
GRADIENT	.00291	.00038	-.00667	-.00043	-.00032	.00090	.00285	.00069	-.00023	.00093

CA20 747/1 01 S1

CARRIER DATA (SGN113) (26 NOV 75)

REFERENCE DATA

SREF =	5500.0000 SQ.FT.	XMRP =	1339.9000	IN.XC
LREF =	327.7800 IN.	YMRP =	.0000	IN.YC
BREF =	2348.0400 IN.	ZMRP =	190.8000	IN.ZC
SCALE =	.0300			

PARAMETRIC DATA

ALPHAC =	8.000	BETAC =	.000
ELV-IB =	.000	ELV-OB =	3.000
ELEVON =	5.000	MACH =	.600
BETAO =	-5.000	PHI =	.000
DX =	.000	DY =	10.000

RUN NO. 0/ 0 RN/L = 3.26 GRADIENT INTERVAL = .00/ 12.00

ALPHAO	DZ	CN-C	CA-C	CLM-C	CY-C	CBL-C	CYN-C	CL-C	CD-C	CSL-C	CLN-C
14.000	.000	.63892	-.02826	-.12277	-.02705	.00697	-.00431	.63248	.08507	.00601	-.00543
14.000	3.000	.64839	-.02948	-.13989	-.02818	.00545	-.00006	.64185	.08650	.00525	-.00098
14.000	7.500	.66663	-.02972	-.16651	-.02764	.00356	.00311	.66002	.08844	.00394	.00247
14.000	15.000	.69166	-.03104	-.20179	-.02855	.00122	.00725	.68490	.09148	.00235	.00695
14.000	30.000	.72767	-.03280	-.23449	-.02310	-.00056	.00900	.72067	.09601	.00073	.00800
14.000	45.000	.75127	-.03345	-.24182	-.01620	-.00062	.00537	.74403	.09947	.00022	.00542
14.000	60.000	.76713	-.03357	-.24823	-.01262	-.00065	.00424	.75965	.10210	-.00001	.00432
	GRADIENT	.00372	-.00020	-.00612	-.00006	-.00045	.00097	.00370	.00045	-.00028	.00103

CA20 747/1 01 SI CARRIER DATA (SGN114) (26 NOV 75)

REFERENCE DATA

SREF = 5500.0000 SQ.FT. XMRP = 1339.9000 IN.XC
LREF = 327.7800 IN. YMRP = .0000 IN.YC
BREF = 2348.0400 IN. ZMRP = 190.8000 IN.ZC
SCALE = .0300

PARAMETRIC DATA

ALPHAC =	8.000	BETAC =	.000
ELV-IB =	.000	ELV-OB =	3.000
ELEVON =	5.000	MACH =	.600
BETAO =	-5.000	PHI =	.000
DX =	10.000	DY =	10.000

RUN NO. 0/ 0 RN/L = 3.22 GRADIENT INTERVAL = .00/ 12.00

ALPHAO	DZ	CN-C	CA-C	CLM-C	CY-C	CBL-C	CYN-C	CL-C	CD-C	CSL-C	CLN-C
14.000	.000	.70334	-.03187	-.12807	-.01934	.00431	-.00392	.69554	.09270	.00346	-.00459
14.000	3.000	.70889	-.03164	-.13707	-.02267	.00272	.00047	.70197	.09389	.00266	.00001
14.000	7.500	.72171	-.03273	-.16786	-.02516	.00134	.00418	.71479	.09504	.00194	.00391
14.000	15.000	.74106	-.03385	-.19835	-.02573	-.00019	.00746	.73404	.09730	.00101	.00740
14.000	30.000	.77026	-.03496	-.23273	-.01844	-.00063	.00620	.76299	.10128	.00035	.00624
14.000	45.000	.78827	-.03499	-.23848	-.01442	-.00072	.00486	.78073	.10437	.00003	.00494
14.000	60.000	.80207	-.03474	-.24674	-.01215	-.00084	.00418	.79427	.10702	-.00020	.00429
	GRADIENT	.00248	-.00012	-.00543	-.00076	-.00039	.00106	.00247	.00031	-.00020	.00111

CA20 747/1 01 SI CARRIER DATA (SGN115) (26 NOV 75)

REFERENCE DATA

SREF = 5500.0000 SQ.FT. XMRP = 1339.9000 IN.XC
LREF = 327.7800 IN. YMRP = .0000 IN.YC
BREF = 2348.0400 IN. ZMRP = 190.8000 IN.ZC
SCALE = .0300

PARAMETRIC DATA

ALPHAC =	4.000	BETAC =	5.000
ELV-IB =	.000	ELV-OB =	3.000
ELEVON =	5.000	MACH =	.600
BETAO =	-5.000	PHI =	.000
DX =	10.000	DY =	.000

RN/L = 3.26 GRADIENT INTERVAL = .00/ 12.00

ALPHAO = 10.000

DZ	CN-C	CA-C	CLM-C	CY-C	CBL-C	CYN-C	CL-C	CD-C	CSL-C	CLN-C
.000	.37128	.00766	-.16749	-.10802	-.01775	.02198	.36690	.04921	-.01515	.02389
3.000	.37237	.00835	-.16545	-.10399	-.01791	.02263	.36791	.05000	-.01525	.02455
7.500	.37915	.00921	-.17233	-.09752	-.01721	.02116	.37457	.05157	-.01469	.02301
15.000	.39119	.00971	-.18096	-.08755	-.01566	.01752	.38649	.05332	-.01354	.01923
30.000	.41026	.00870	-.19101	-.08135	-.01391	.01476	.40555	.05432	-.01209	.01630
45.000	.42571	.00737	-.20234	-.08553	-.01382	.01698	.42106	.05461	-.01176	.01859
60.000	.44197	.00604	-.21374	-.08882	-.01350	.01870	.43738	.05498	-.01126	.02018
GRADIENT	.00139	.00021	-.00072	.00140	.00008	-.00013	.00106	.00032	.00007	-.00013

ORIGINAL PAGE IS OF POOR QUALITY

CA20 747/1 01 S1 CARRIER DATA (5GN115) (26 NOV 75)

REFERENCE DATA

SREF =	5500.0000 SQ.FT.	XMRP =	1339.9000	IN.XC	
LREF =	327.7800 IN.	YMRP =	.0000	IN.YC	
BREF =	2348.0400 IN.	ZMRP =	190.8000	IN.ZC	
SCALE =	.0300				

PARAMETRIC DATA

ALPHAC =	4.000	BETAC =	5.000
ELV-IB =	.000	ELV-OB =	3.000
ELEVON =	5.000	MACH =	.600
BETAO =	-5.000	PHI =	.000
DX =	10.000	DY =	.000

RN/L = 3.27 GRADIENT INTERVAL = .00/ 12.00

ALPHAO = 14.000

DZ	CN-C	CA-C	CLM-C	CY-C	CBL-C	CYN-C	CL-C	CD-C	CSL-C	CLN-C
.000	.31734	.00411	-.08505	-.11268	-.01866	.02291	.31363	.04003	-.01596	.02490
3.000	.31553	.00529	-.07909	-.10985	-.01917	.02494	.31171	.04102	-.01626	.02698
7.500	.32049	.00746	-.08335	-.10124	-.01850	.02312	.31641	.04370	-.01578	.02510
15.000	.33778	.00975	-.10898	-.08801	-.01672	.01775	.33337	.04778	-.01456	.01957
30.000	.36988	.01019	-.14630	-.07563	-.01368	.01192	.36525	.05157	-.01215	.01345
45.000	.39409	.00871	-.17012	-.08284	-.01364	.01552	.38947	.05263	-.01174	.01703
60.000	.41244	.00736	-.18755	-.08735	-.01371	.01779	.40787	.05320	-.01157	.01929
GRADIENT	.00047	.00045	00013	.00156	.00003	-.00001	.00042	.00050	.00003	-.00001

CA20 747/1 01 S1 CARRIER DATA (5GN116) (26 NOV 75)

REFERENCE DATA

SREF =	5500.0000 SQ.FT.	XMRP =	1339.9000	IN.XC	
LREF =	327.7800 IN.	YMRP =	.0000	IN.YC	
BREF =	2348.0400 IN.	ZMRP =	190.8000	IN.ZC	
SCALE =	.0300				

PARAMETRIC DATA

ALPHAC =	8.000	BETAC =	5.000
ELV-IB =	.000	ELV-OB =	3.000
ELEVON =	5.000	MACH =	.600
BETAO =	-5.000	PHI =	.000
DX =	10.000	DY =	.000

RN/L = 3.26 GRADIENT INTERVAL = .00/ 12.00

ALPHAO = 10.000

DZ	CN-C	CA-C	CLM-C	CY-C	CBL-C	CYN-C	CL-C	CD-C	CSL-C	CLN-C
.000	.77033	-.02690	-.29179	-.10172	-.01313	.01825	.76224	.10871	-.00970	.02033
3.000	.77034	-.02710	-.28509	-.09677	-.01319	.01818	.76229	.10851	-.00977	.02028
7.500	.77265	-.02710	-.28023	-.09039	-.01280	.01704	.76457	.10892	-.00959	.01909
15.000	.77870	-.02708	-.27838	-.08362	-.01177	.01532	.77052	.10998	-.00887	.01721
30.000	.79181	-.02812	-.27009	-.08124	-.01088	.01479	.78362	.11124	-.00809	.01654
45.000	.80550	-.02901	-.27016	-.08614	-.01104	.01718	.79725	.11273	-.00783	.01893
60.000	.81939	-.03007	-.26714	-.08986	-.01101	.01913	.81111	.11410	-.00746	.02083
GRADIENT	.00033	-.00002	.00150	.00150	.00005	-.00017	.00033	.00003	.00002	-.00017

CA20 747/1 01 S1 CARRIER DATA (SGN116) (26 NOV 75)

REFERENCE DATA

SREF = 5500.0000 SQ.FT. XMRP = 1339.9000 IN.XC
LREF = 327.7800 IN. YMRP = .0000 IN.YC
BREF = 2348.0400 IN. ZMRP = 190.8000 IN.ZC
SCALE = .0300

PARAMETRIC DATA

ALPHAC =	3.000	BETAC =	5.000
ELV-IB =	.000	ELV-OB =	3.000
ELEVON =	5.000	MACH =	.600
BETAO =	-5.000	PHI =	.000
DX =	10.000	DY =	.000

RN/L = 3.26 GRADIENT INTERVAL = .00/ 12.00

ALPHAO = 14.000

DZ	CN-C	CA-C	CLM-C	CY-C	CBL-C	CYN-C	CL-C	CD-C	CSL-C	CLN-C
.000	.70912	-.02824	-.20920	-.11123	-.01532	.02210	.70220	.09876	-.01119	.02451
3.000	.71091	-.02796	-.21188	-.10449	-.01525	.02208	.70391	.09735	-.01112	.02448
7.500	.71667	-.02721	-.21669	-.09365	-.01407	.01909	.70945	.09908	-.01048	.02132
15.000	.72649	-.02671	-.22589	-.08100	-.01237	.01438	.72101	.10163	-.00962	.01640
30.000	.75243	-.02722	-.23528	-.07466	-.01022	.01125	.74467	.10528	-.00805	.01294
45.000	.77196	-.02853	-.24640	-.08329	-.01101	.01610	.76414	.10739	-.00799	.01785
60.000	.78962	-.02948	-.25603	-.08658	-.01096	.01765	.78169	.10951	-.00767	.01937
GRADIENT	.00103	.00014	-.00100	.00235	.00017	-.00042	.00099	.00031	.00010	-.00045

CA20 747/1 01 S1 CARRIER DATA (SGN117) (26 NOV 75)

REFERENCE DATA

SREF = 5500.0000 SQ.FT. XMRP = 1339.9000 IN.XC
LREF = 327.7800 IN. YMRP = .0000 IN.YC
BREF = 2348.0400 IN. ZMRP = 190.8000 IN.ZC
SCALE = .0300

PARAMETRIC DATA

ALPHAC =	4.000	BETAC =	5.000
ELV-IB =	.000	ELV-OB =	3.000
ELEVON =	5.000	MACH =	.600
BETAO =	-5.000	PHI =	.000
DX =	.000	DY =	10.000

RUN NO. 0/ 0 RN/L = 3.29 GRADIENT INTERVAL = .00/ 12.00

ALPHAO	DZ	CN-C	CA-C	CLM-C	CY-C	CBL-C	CYN-C	CL-C	CD-C	CSL-C	CLN-C
10.000	.000	.31800	.01084	-.07900	-.10880	-.00867	.01485	.31358	.04680	-.00687	.01585
10.000	3.000	.32407	.01107	-.08950	-.10747	-.01020	.01771	.31960	.04766	-.00809	.01885
10.000	7.500	.33749	.01056	-.10824	-.10708	-.01170	.02075	.33300	.04855	-.00926	.02203
10.000	15.000	.35851	.01020	-.14562	-.10140	-.01237	.02041	.35394	.05040	-.00996	.02176
10.000	30.000	.38595	.00823	-.17987	-.09811	-.01331	.02101	.38143	.05130	-.01064	.02245
10.000	45.000	.40416	.00653	-.19608	-.09533	-.01359	.02084	.39972	.05152	-.01113	.02231
10.000	60.000	.42233	.00482	-.21355	-.09270	-.01387	.02072	.41797	.05172	-.01142	.02223
	GRADIENT	.00263	-.00004	-.00392	.00022	-.00040	.00078	.00202	.00023	-.00031	.00081

CA20 747/1 01 SI CARRIER DATA (5GN11B) (26 NOV 75)

REFERENCE DATA

SREF = 5500.0000 SQ.FT. XMRP = 1339.9000 IN.XC
LREF = 327.7800 IN. YMRP = .0000 IN.YC
BREF = 2348.0400 IN. ZMRP = 190.8000 IN.ZC
SCALE = .0300

PARAMETRIC DATA

ALPHAC = 4.000 BETAC = 5.000
ELV-IB = .000 ELV-OB = 3.000
ELEVON = 5.000 MACH = .600
BETAO = -5.000 PHI = .000
DX = 10.000 DY = 10.000

RN/L = 3.29 GRADIENT INTERVAL = .00/ 12.00

ALPHAO = 10.000

DZ	CN-C	CA-C	CLM-C	CY-C	CBL-C	CYN-C	CL-C	CD-C	CSL-C	CLN-C
.000	.36268	.01028	-.10414	-.10389	-.00913	.01437	.35807	.05090	-.00737	.01542
3.000	.36488	.00988	-.10981	-.10559	-.01058	.01812	.36031	.05074	-.00842	.01930
7.500	.37519	.00898	-.12827	-.10667	-.01185	.02152	.37065	.05092	-.00933	.02281
15.000	.39052	.00932	-.16195	-.10082	-.01239	.02037	.38586	.05286	-.00999	.02173
30.000	.41507	.00722	-.19179	-.09971	-.01349	.02205	.41050	.05334	-.01091	.02351
45.000	.42927	.00630	-.20300	-.09486	-.01343	.02042	.42472	.05391	-.01102	.02188
60.000	.44497	.00514	-.21569	-.09090	-.01357	.01944	.44045	.05440	-.01126	.02092
GRADIENT	.00172	-.00018	-.00329	-.00036	-.00036	.00094	.00173	.00001	-.00026	.00097

RN/L = 3.25 GRADIENT INTERVAL = .00/ 12.00

ALPHAO = 14.000

DZ	CN-C	CA-C	CLM-C	CY-C	CBL-C	CYN-C	CL-C	CD-C	CSL-C	CLN-C
.000	.30109	.00096	.02892	-.10874	-.00673	.01097	.29780	.03520	-.00534	.01178
3.000	.29933	.00366	.02597	-.10820	-.00805	.01455	.29577	.03770	-.00628	.01548
7.500	.30718	.00669	.00075	-.11088	-.00979	.02053	.30326	.04153	-.00739	.02161
15.000	.33354	.00852	-.06548	-.10916	-.01122	.02296	.32928	.04612	-.00855	.02417
30.000	.37171	.00837	-.13915	-.10328	-.01263	.02304	.36726	.04995	-.00995	.02440
45.000	.39707	.00742	-.17042	-.09975	-.01317	.02258	.39258	.05166	-.01054	.02400
60.000	.41468	.00675	-.18902	-.09598	-.01322	.02132	.41016	.05284	-.01071	.02275
GRADIENT	.00089	.00076	-.00390	-.00031	-.00041	.00128	.00080	.00084	-.00027	.00131

ORIGINAL PAGE IS
OF POOR QUALITY

CA20 747/1 01 S1 CARRIER DATA (5GN119) (26 NOV 75)

REFERENCE DATA

SREF	= 5500.0000 SQ.FT.	XMRP	= 1339.9000	IN.XC	
LREF	= 327.7800 IN.	YMRP	= .0000	IN.YC	
BREF	= 2348.0400 IN.	ZMRP	= 190.8000	IN.ZC	
SCALE	= .0300				

PARAMETRIC DATA

[illegible]	= 8.000	BETAC	= 5.000
[illegible]	= .000	ELV-OB	= 3.000
ELEVON	= 5.000	MACH	= .600
BETAO	= -5.000	PHI	= .000
DX	= 10.000	DY	= 10.000

RN/L = 3.23 GRADIENT INTERVAL = .00/ 12.00

ALPHAO = 10.000

DZ	CN-C	CA-C	CLM-C	CY-C	CBL-C	CYN-C	CL-C	CD-C	CSL-C	CLN-C
.000	.76812	-.02517	-.26035	-.10200	-.00710	.01469	.75977	.11002	-.00438	.01578
3.000	.76990	-.02598	-.26227	-.10263	-.00809	.01730	.76166	.10954	-.00491	.01853
7.500	.76941	-.02661	-.25697	-.09941	-.00900	.01828	.76129	.10884	-.00562	.01965
15.000	.77308	-.02692	-.26567	-.09676	-.00942	.01909	.76496	.10917	-.00590	.02052
30.000	.79039	-.02856	-.27084	-.09510	-.01070	.02066	.78229	.11056	-.00689	.02229
45.000	.80359	-.02651	-.27090	-.09040	-.01036	.01875	.79528	.11289	-.00689	.02035
60.000	.81935	-.02930	-.27157	-.08690	-.01072	.01822	.81093	.11485	-.00733	.01999
GRADIENT	.00015	-.00019	.00051	.00037	-.00025	.00046	.00018	-.00016	-.00017	.00050

RN/L = 3.22 GRADIENT INTERVAL = .00/ 12.00

ALPHAO = 14.000

DZ	CN-C	CA-C	CLM-C	CY-C	CBL-C	CYN-C	CL-C	CD-C	CSL-C	CLN-C
.000	.70636	-.02803	-.14879	-.10869	-.00621	.01322	.69944	.09648	-.00376	.01418
3.000	.71011	-.02835	-.16106	-.11114	-.00782	.01799	.70319	.09682	-.00451	.01916
7.500	.71859	-.02841	-.18318	-.11079	-.00879	.02130	.71156	.09824	-.00489	.02259
15.000	.73010	-.02880	-.20626	-.10462	-.00939	.02124	.72292	.10005	-.00550	.02263
30.000	.75472	-.02932	-.23721	-.09938	-.01036	.02171	.74729	.10362	-.00637	.02327
45.000	.77397	-.02939	-.24708	-.09515	-.01053	.02077	.76627	.10669	-.00671	.02237
60.000	.79932	-.02961	-.25647	-.09215	-.01062	.01989	.78142	.10934	-.00695	.02152
GRADIENT	.00165	-.00005	-.00461	-.00025	-.00033	.00105	.00163	.00024	-.00015	.00109

CA20 747/1 01 S1 CARRIER DATA (5GN120) (26 NOV 75)

REFERENCE DATA

SREF =	5500.0000 SQ.FT.	XMRP =	1339.9000 IN.XC		
LREF =	327.7800 IN.	YMRP =	.0000 IN.YC		
BREF =	2348.0400 IN.	ZMRP =	190.8000 IN.ZC		
SCALE =	.0300				

PARAMETRIC DATA

ALPHAC =	4.000	BETAC =	-5.000
ELV-IB =	.000	ELV-OB =	.000
ELEVON =	5.000	MACH =	.600
BETAO =	-5.000	PHI =	.000
DX =	.000	DY =	10.000

RN/L = 3.26 GRADIENT INTERVAL = .00/ 12.00

ALPHAO = 10.000

DZ	CN-C	CA-C	CLM-C	CY-C	CBL-C	CYN-C	CL-C	CD-C	CSL-C	CLN-C
.000	.32139	.01299	-.10465	.06609	.01745	-.01524	.31671	.04941	.01560	-.01710
3.000	.32665	.01276	-.10211	.06686	.01722	-.01563	.32197	.04974	.01534	-.01746
7.500	.33910	.01229	-.10894	.06683	.01636	-.01486	.33440	.05057	.01456	-.01660
15.000	.35724	.01188	-.12317	.06533	.01496	-.01321	.35247	.05206	.01334	-.01482
30.000	.38292	.00977	-.13673	.06901	.01404	-.01376	.37824	.05265	.01237	-.01527
45.000	.40145	.00806	-.14863	.07191	.01334	-.01445	.39685	.05288	.01159	-.01588
60.000	.42030	.00668	-.16225	.07481	.01225	-.01502	.41574	.05348	.01045	-.01634
GRADIENT	.00239	-.00009	-.00065	.00009	-.00015	.00006	.00239	.00016	-.00014	.00008

RN/L = 3.24 GRADIENT INTERVAL = .00/ 12.00

ALPHAO = 14.000

DZ	CN-C	CA-C	CLM-C	CY-C	CBL-C	CYN-C	CL-C	CD-C	CSL-C	CLN-C
.000	.24935	.01126	-.02541	.05385	.02190	-.01446	.24525	.04017	.02011	-.01679
3.000	.25711	.01212	-.03006	.05768	.02148	-.01539	.25287	.04183	.01961	-.01767
7.500	.27022	.01306	-.03230	.05811	.02045	-.01435	.26581	.04414	.01868	-.01652
15.000	.29850	.01342	-.06292	.05662	.01812	-.01203	.29390	.04745	.01660	-.01398
30.000	.34149	.01238	-.10238	.05120	.01352	-.00582	.33677	.05091	.01268	-.00732
45.000	.36883	.01045	-.12421	.06197	.01322	-.01011	.36415	.05185	.01193	-.01156
60.000	.38955	.00858	-.14056	.07048	.01327	-.01383	.38496	.05215	.01159	-.01526
GRADIENT	.00279	.00024	-.00089	.00053	-.00020	.00003	.00275	.00053	-.00019	.00005

CA20 747/1 01 S1 CARRIER DATA (5GN121) (26 NOV 75)

REFERENCE DATA

SREF =	5500.0000 SQ.FT.	XMRP =	1339.9000 IN.XC		
LREF =	327.7800 IN.	YMRP =	.0000 IN.YC		
BREF =	2348.0400 IN.	ZMRP =	190.8000 IN.ZC		
SCALE =	.0300				

PARAMETRIC DATA

ALPHAC =	8.000	BETAC =	-5.000
ELV-IB =	.000	ELV-OB =	.000
ELEVON =	5.000	MACH =	.600
BETAO =	-5.000	PHI =	.000
DX =	.000	DY =	10.000

RN/L = 3.25 GRADIENT INTERVAL = .00/ 12.00

ALPHAO = 10.000

DZ	CN-C	CA-C	CLM-C	CY-C	CBL-C	CYN-C	CL-C	CD-C	CSL-C	CLN-C
.000	.73633	-.02403	-.22800	.05954	.01454	-.01325	.72843	.10538	.01205	-.01546
3.000	.74023	-.02520	-.22738	.06071	.01486	-.01315	.73247	.10490	.01239	-.01542
7.500	.74733	-.02619	-.22637	.06117	.01479	-.01223	.73964	.10515	.01249	-.01450
15.000	.75823	-.02714	-.22442	.06332	.01472	-.01223	.75054	.10611	.01241	-.01449
30.000	.77652	-.02920	-.22446	.06908	.01529	-.01400	.76891	.10726	.01267	-.01633
45.000	.79085	-.03041	-.22282	.07134	.01525	-.01442	.78324	.10855	.01255	-.01674
60.000	.80551	-.03157	-.22155	.07362	.01518	-.01488	.79787	.10996	.01240	-.01718
GRADIENT	.00147	-.00028	.00022	.00021	.00003	.00014	.00150	-.00002	.00005	.00013

RN/L = 3.24 GRADIENT INTERVAL = .00/ 12.00

ALPHAO = 14.000

DZ	CN-C	CA-C	CLM-C	CY-C	CBL-C	CYN-C	CL-C	CD-C	CSL-C	CLN-C
.000	.64989	-.02234	-.14915	.05117	.01986	-.01454	.64301	.09203	.01707	-.01765
3.000	.65786	-.02300	-.14964	.05299	.01938	-.01405	.65098	.09276	.01668	-.01709
7.500	.67436	-.02405	-.16640	.05495	.01819	-.01318	.66741	.09459	.01565	-.01602
15.000	.69830	-.02527	-.18567	.04920	.01606	-.00772	.69120	.09755	.01452	-.01028
30.000	.73149	-.02735	-.19590	.05553	.01457	-.00796	.72424	.10126	.01301	-.01026
45.000	.75768	-.02921	-.20734	.06475	.01503	-.01176	.75036	.10398	.01280	-.01408
60.000	.77673	-.03063	-.21221	.06971	.01525	-.01376	.76937	.10569	.01266	-.01608
GRADIENT	.00330	-.00023	-.00241	.00050	-.00023	.00018	.00328	.00035	-.00019	.00022

ORIGINAL PAGE IS
OF POOR QUALITY

DATE 26 NOV 75 TABULATED SOURCE DATA - CA20

CA20 747/1 01 S1 CARRIER DATA (SGN122) (26 NOV 75)

REFERENCE DATA

SREF =	5500.0000 SQ.FT.	XMRP =	1339.9000	IN.XC	
LREF =	327.7900 IN.	YMRP =	.0000	IN.YC	
BREF =	2348.0400 IN.	ZMRP =	190.8000	IN.ZC	
SCALE =	.0300				

PARAMETRIC DATA

ALPHAC =	4.000	BETAC =	.000
ELV-IB =	.000	ELV-OB =	.000
ELEVON =	5.000	MACH =	.600
BETAO =	-5.000	PHI =	.000
DX =	.000	DY =	10.000

RN/L = 3.33 GRADIENT INTERVAL = .00/ 12.00

ALPHAO = 10.000

DZ	CN-C	CA-C	CLM-C	CY-C	CBL-C	CYN-C	CL-C	CD-C	CSL-C	CLN-C
.000	.30610	.01750	-.04392	-.01431	.00439	-.00367	.30106	.05261	.00393	-.00412
3.000	.31544	.01780	-.05783	-.01504	.00319	-.00124	.31032	.05388	.00299	-.00157
7.500	.32997	.01742	-.07595	-.01712	.00156	.00189	.32481	.05502	.00171	.00181
15.000	.35075	.01617	-.10586	-.02061	-.00011	.00579	.34560	.05595	.00044	.00577
30.000	.37685	.01480	-.13215	-.01470	-.00067	.00470	.37170	.05732	-.00023	.00473
45.000	.39704	.01321	-.14898	-.01136	-.00102	.00382	.39195	.05785	-.00067	.00390
60.000	.41831	.01138	-.16692	-.00739	-.00124	.00254	.41329	.05825	-.00102	.00265
GRADIENT	.00319	-.00002	-.00425	-.00038	-.00038	.00075	.00317	.00032	-.00030	.00079

RN/L = 3.27 GRADIENT INTERVAL = .00/ 12.00

ALPHAO = 14.000

DZ	CN-C	CA-C	CLM-C	CY-C	CBL-C	CYN-C	CL-C	CD-C	CSL-C	CLN-C
.000	.21497	.01462	.09769	-.02605	.00888	-.00402	.21073	.04022	.00836	-.00494
3.000	.23160	.01515	.05905	-.02327	.00762	-.00272	.22721	.04249	.00724	-.00351
7.500	.25222	.01564	.02647	-.02484	.00579	.00147	.24767	.04513	.00586	.00085
15.000	.28815	.01605	-.03149	-.02379	.00314	.00414	.28336	.04929	.00351	.00378
30.000	.33474	.01538	-.09538	-.02858	-.00096	.01094	.32977	.05350	.00014	.01097
45.000	.36444	.01436	-.12236	-.01659	-.00051	.00596	.35941	.05558	.00006	.00597
60.000	.38531	.01309	-.13931	-.01222	-.00074	.00436	.38030	.05651	-.00033	.00441
GRADIENT	.00494	.00013	-.00932	.00012	-.00041	.00075	.00490	.00065	-.00033	.00079

CA20 747/1 01 S1 CARRIER DATA (5GN123) (26 NOV 75)

REFERENCE DATA

SREF =	5500.0000 SQ.FT.	XMRP =	1339.9000 IN.XC		
LREF =	327.7800 IN.	YMRP =	.0000 IN.YC		
BREF =	2348.0400 IN.	ZMRP =	190.8000 IN.ZC		
SCALE =	.0300				

PARAMETRIC DATA

ALPHAC =	8.000	BETAC =	.000
ELV-IB =	.000	ELV-OB =	.000
ELEVON =	5.000	MACH =	.600
BETAO =	-5.000	PHI =	.000
DX =	.000	DY =	10.000

RN/L = 3.28 GRADIENT INTERVAL = .00/ 12.00

ALPHAO = 10.000

DZ	CN-C	CA-C	CLM-C	CY-C	CBL-C	CYN-C	CL-C	CD-C	CSL-C	CLN-C
.000	.74187	-.02835	-.19902	-.02007	-.00109	-.00098	.73388	.10285	-.00135	-.00075
3.000	.74573	-.02920	-.20229	-.02095	-.00169	.00128	.73783	.10269	-.00153	.00158
7.500	.75405	-.03027	-.21130	-.02225	-.00270	.00406	.74621	.10308	-.00206	.00450
15.000	.76275	-.03141	-.21659	-.02245	-.00369	.00634	.75497	.10347	-.00263	.00691
30.000	.78177	-.03233	-.21768	-.01295	-.00302	.00333	.77387	.10587	.00250	.00383
45.000	.79520	-.03242	-.21788	-.01185	-.00308	.00340	.78711	.10811	-.00255	.00391
60.000	.80825	-.03252	-.21818	-.01140	-.00317	.00369	.79998	.11028	-.00258	.00421
GRADIENT	.00164	-.00025	-.00167	-.00029	-.00022	.00067	.00166	.00004	-.00010	.00070

RN/L = 3.26 GRADIENT INTERVAL = .00/ 12.00

ALPHAO = 14.000

DZ	CN-C	CA-C	CLM-C	CY-C	CBL-C	CYN-C	CL-C	CD-C	CSL-C	CLN-C
.000	.66065	-.02893	-.11152	-.02885	.00455	-.00243	.65400	.08818	.00396	-.00316
3.000	.66896	-.02931	-.12747	-.02958	.00315	.00108	.66224	.08924	.00319	.00055
7.500	.68551	-.03043	-.15116	-.02843	.00162	.00360	.67874	.09102	.00212	.00329
15.000	.70811	-.03211	-.17954	-.03095	-.00062	.00816	.70129	.09329	.00070	.00817
30.000	.74202	-.03312	-.20322	-.02453	-.00234	.00835	.73486	.09818	-.00095	.00865
45.000	.76470	-.03352	-.20904	-.01658	-.00224	.00518	.75727	.10173	-.00141	.00552
60.000	.78166	-.03303	-.21353	-.01394	-.00264	.00438	.77408	.10519	-.00194	.00480
GRADIENT	.00334	-.00020	-.00528	.00007	-.00039	.00078	.00333	.00035	-.00024	.00084

CA20 747/1 01 S1 CARRIER DATA (SGN124) (26 NOV 75)

REFERENCE DATA

SREF = 5500.0000 SQ.FT. XMRP = 1339.9000 IN.XC
LREF = 327.7800 IN. YMRP = .0000 IN.YC
BREF = 2348.0400 IN. ZMRP = 190.8000 IN.ZC
SCALE = .0300

PARAMETRIC DATA

ALPHAC = 4.000 BETAC = 5.000
ELV-IB = .000 ELV-OB = .000
ELEVON = 5.000 MACH = .600
BETAO = -5.000 PHI = .000
DX = .000 DY = 10.000

RN/L = 3.25 GRADIENT INTERVAL = .00/ 12.00

ALPHAO = 10.000

DZ	CN-C	CA-C	CLM-C	CY-C	CBL-C	CYN-C	CL-C	CD-C	CSL-C	CLN-C
.000	.33305	.01052	-.05733	-.10779	-.01032	.01664	.32858	.04805	-.00832	.01779
3.000	.33811	.01078	-.06602	-.10713	-.01145	.01888	.33359	.04884	-.00921	.02014
7.500	.34982	.01043	-.08486	-.10574	-.01250	.02071	.34527	.04972	-.01006	.02207
15.000	.37001	.01002	-.12015	-.10045	-.01286	.02024	.36539	.05142	-.01047	.02164
30.000	.39400	.00813	-.14603	-.09755	-.01359	.02090	.38945	.05204	-.01112	.02238
45.000	.41064	.00650	-.15879	-.09503	-.01386	.02052	.40617	.05216	-.01144	.02203
60.000	.42754	.00472	-.17395	-.09250	-.01424	.02011	.42317	.05216	-.01185	.02166
GRADIENT	.00226	-.00002	-.00371	.00028	-.00029	.00053	.00225	.00022	-.00023	.00056

RN/L = 3.23 GRADIENT INTERVAL = .00/ 12.00

ALPHAO = 14.000

DZ	CN-C	CA-C	CLM-C	CY-C	CBL-C	CYN-C	CL-C	CD-C	CSL-C	CLN-C
.000	.24858	.00770	.06393	-.11624	-.00611	.01377	.24488	.03642	-.00443	.01451
3.000	.25941	.00777	.03772	-.11668	-.00814	.01840	.25563	.03761	-.00595	.01932
7.500	.27539	.00880	.00880	-.11591	-.01015	.02246	.27142	.04031	-.00754	.02357
15.000	.30320	.01080	-.03372	-.10909	-.01132	.02223	.29887	.04521	-.00873	.02346
30.000	.34844	.01011	-.10170	-.10283	-.01284	.02245	.34393	.04925	-.01022	.02384
45.000	.37731	.00832	-.13214	-.10080	-.01375	.02291	.37283	.05049	-.01108	.02439
60.000	.39685	.00705	-.14932	-.09698	-.01385	.02165	.39240	.05127	-.01131	.02314
GRADIENT	.00357	.00015	-.00728	.00005	-.00053	.00114	.00354	.00052	-.00041	.00119

CA20 747/1 01 S1 CARRIER DATA (5GN125) (26 NOV 75)

REFERENCE DATA

SREF =	5500.0000 SQ.FT.	XMRP =	1339.9000 IN.XC		
LREF =	327.7800 IN.	YMRP =	.0000 IN.YC		
SREF =	2348.0400 IN.	ZMRP =	190.8000 IN.ZC		
SCALE =	.0300				

PARAMETRIC DATA

ALPHAC =	8.000	BETAC =	5.000
ELV-IB =	.000	ELV-OB =	.000
ELEVON =	5.000	MACH =	.600
BETAO =	-5.000	PHI =	.000
DX =	.000	DY =	10.000

RN/L = 3.23 GRADIENT INTERVAL = .00/ 12.00

ALPHAO = 10.000

DZ	CN-C	CA-C	CLM-C	CY-C	CBL-C	CYN-C	CL-C	CD-C	CSL-C	CLN-C
.000	.74381	-.02361	-.21103	-.10630	-.00862	.01600	.73556	.10734	-.00565	.01733
3.000	.74555	-.02420	-.20916	-.10473	-.00939	.01775	.73737	.10706	-.00611	.01919
7.500	.74976	-.02497	-.21318	-.10223	-.01005	.01875	.74165	.10703	-.00658	.02028
15.000	.75813	-.02585	-.22239	-.09939	-.01050	.01966	.75005	.10762	-.00686	.02127
30.000	.77714	-.02768	-.22916	-.09611	-.01133	.02029	.76908	.10912	-.00757	.02203
45.000	.79023	-.02810	-.22814	-.09274	-.01134	.01961	.78205	.11098	-.00770	.02137
60.000	.80317	-.02842	-.22656	-.08928	-.01129	.01885	.79485	.11292	-.00779	.02061
GRADIENT	.00080	-.00016	-.00033	.00054	-.00019	.00036	.00082	-.00004	-.00012	.00038

RN/L = 3.23 GRADIENT INTERVAL = .00/ 12.00

ALPHAO = 14.000

DZ	CN-C	CA-C	CLM-C	CY-C	CBL-C	CYN-C	CL-C	CD-C	CSL-C	CLN-C
.000	.66956	-.02706	-.12848	-.11545	-.00749	.01403	.66313	.09107	-.00488	.01520
3.000	.67629	-.02755	-.13348	-.11568	-.00962	.01851	.66975	.09174	-.00620	.01999
7.500	.68891	-.02719	-.15706	-.11297	-.01060	.02084	.68211	.09428	-.00676	.02245
15.000	.70697	-.02752	-.18243	-.10617	-.01124	.02097	.69996	.09710	-.00736	.02269
30.000	.73215	-.02705	-.20292	-.10058	-.01088	.02168	.72467	.10193	-.00689	.02333
45.000	.75571	-.02771	-.21358	-.09681	-.01107	.02118	.74799	.10537	-.00716	.02286
60.000	.77333	-.02772	-.21998	-.09377	-.01106	.02032	.76534	.10642	-.00731	.02201
GRADIENT	.00259	-.00001	-.00392	.00035	-.00040	.00088	.00255	.00044	-.00024	.00093

ORIGINAL PAGE IS
OF POOR QUALITY

CA20 747/1 02 S1 CARRIER DATA (SGN126) (26 NOV 75)

REFERENCE DATA

SREF = 5500.0000 SQ.FT. XMRP = 1339.9000 IN.XC
LREF = 327.7800 IN. YMRP = .0000 IN.YC
BREF = 2348.0400 IN. ZMRP = 190.8000 IN.ZC
SCALE = .0300

PARAMETRIC DATA

ALPHAC =	4.000	BETAC =	-5.000
ELV-IB =	.000	ELV-OB =	3.000
ELEVON =	5.000	MACH =	.600
BETAO =	.000	PHI =	.000
DX =	.000	DY =	.000

RUN NO. 0/ 0 RN/L = 3.28 GRADIENT INTERVAL = .00/ 12.00

ALPHAO	DZ	CN-C	CA-C	CLM-C	CY-C	CBL-C	CYN-C	CL-C	CD-C	CSL-C	CLN-C
10.000	.000	.29850	.01045	-.09545	.08358	.01461	-.01285	.29421	.04450	.01302	-.01443
10.000	3.000	.30519	.01071	-.10162	.08260	.01530	-.01560	.30083	.04546	.01343	-.01722
10.000	7.500	.31950	.01155	-.12411	.08095	.01552	-.01659	.31498	.04779	.01354	-.01824
10.000	15.000	.34154	.01118	-.15086	.07775	.01526	-.01652	.33694	.04973	.01329	-.01815
10.000	30.000	.37098	.01018	-.17559	.07109	.01379	-.01369	.36632	.05181	.01212	-.01517
10.000	45.000	.39023	.00835	-.18719	.07250	.01352	-.01451	.38566	.05200	.01177	-.01596
10.000	60.000	.40627	.00656	-.19804	.07570	.01355	-.01631	.40179	.05189	.01161	-.01775
	GRADIENT	.00283	.00015	-.00391	-.00035	.00012	-.00048	.00280	.00045	.00007	-.00049

CA20 747/1 02 S1 CARRIER DATA (SGN127) (26 NOV 75)

REFERENCE DATA

SREF = 5500.0000 SQ.FT. XMRP = 1339.9000 IN.XC
LREF = 327.7800 IN. YMRP = .0000 IN.YC
BREF = 2348.0400 IN. ZMRP = 190.8000 IN.ZC
SCALE = .0300

PARAMETRIC DATA

ALPHAC =	4.000	BETAC =	-5.000
ELV-IB =	.000	ELV-OB =	3.000
ELEVON =	5.000	MACH =	.600
BETAO =	.000	PHI =	.000
DX =	10.000	DY =	.000

RUN NO. 0/ 0 RN/L = 3.34 GRADIENT INTERVAL = .00/ 12.00

ALPHAO	DZ	CN-C	CA-C	CLM-C	CY-C	CBL-C	CYN-C	CL-C	CD-C	CSL-C	CLN-C
10.000	.000	.32049	.00815	-.09962	.08369	.01471	-.01362	.31632	.04451	.01305	-.01520
10.000	3.000	.32501	.00857	-.10667	.08455	.01533	-.01663	.32077	.04540	.01335	-.01826
10.000	7.500	.33674	.00933	-.12963	.08336	.01555	-.01758	.33236	.04738	.01347	-.01923
10.000	15.000	.35240	.00956	-.15146	.08082	.01550	-.01768	.34791	.04925	.01341	-.01932
10.000	30.000	.37698	.00924	-.17592	.07299	.01399	-.01423	.37239	.05150	.01227	-.01574
10.000	45.000	.39304	.00780	-.18755	.07389	.01362	-.01484	.38850	.05174	.01183	-.01630
10.000	60.000	.40687	.00646	-.19814	.07637	.01360	-.01614	.40240	.05185	.01168	-.01759
	GRADIENT	.00220	.00016	-.00409	-.00006	.00011	-.00050	.00217	.00039	.00005	-.00051

CA20 747/1 02 SI CARRIER DATA (SGN128) (26 NOV 75)

REFERENCE DATA

SREF =	5500.0000 SQ.FT.	XMRP =	1339.9000 IN.XC		
LREF =	327.7800 IN.	YMRP =	.0000 IN.YC		
BREF =	2348.0400 IN.	ZMRP =	190.8000 IN.ZC		
SCALE =	.0300				

PARAMETRIC DATA

ALPHAC =	4.000	BETAC =	-5.000
ELV-IB =	.000	ELV-OB =	3.000
ELEVON =	5.000	MACH =	.600
BETAO =	.000	PHI =	.000
DX =	20.000	DY =	.000

RUN NO. 0/ 0 RN/L = 3.32 GRADIENT INTERVAL = .00/ 12.00

ALPHAO	DZ	CN-C	CA-C	CLM-C	CY-C	CBL-C	CYN-C	CL-C	CD-C	CSL-C	CLN-C
10.000	.000	.34165	.00738	-.12089	.08279	.01409	-.01358	.33745	.04595	.01244	-.01510
10.000	3.000	.34477	.00706	-.12418	.08489	.01486	-.01677	.34058	.04595	.01295	-.01836
10.000	7.500	.35279	.00747	-.14187	.08482	.01527	-.01831	.34851	.04721	.01311	-.01993
10.000	15.000	.36599	.00764	-.15936	.08179	.01547	-.01804	.36162	.04876	.01334	-.01969
10.000	30.000	.38511	.00793	-.17971	.07413	.01400	-.01485	.38061	.05104	.01221	-.01635
10.000	45.000	.39951	.00679	-.18952	.07377	.01348	-.01475	.39505	.05142	.01170	-.01619
10.000	60.000	.41406	.00537	-.19872	.07527	.01337	-.01552	.40967	.05152	.01151	-.01695
	GRADIENT	.00151	.00002	-.00289	.00025	.00015	-.00061	.00150	.00018	.00009	-.00062

CA20 747/1 02 SI CARRIER DATA (SGN129) (26 NOV 75)

REFERENCE DATA

SREF =	5500.0000 SQ.FT.	XMRP =	1339.9000 IN.XC		
LREF =	327.7800 IN.	YMRP =	.0000 IN.YC		
BREF =	2348.0400 IN.	ZMRP =	190.8000 IN.ZC		
SCALE =	.0300				

PARAMETRIC DATA

ALPHAC =	4.000	BETAC =	.000
ELV-IB =	.000	ELV-OB =	3.000
ELEVON =	5.000	MACH =	.600
BETAO =	.000	PHI =	.000
DX =	.000	DY =	.000

RN/L = 3.31 GRADIENT INTERVAL = .00/ 12.00

ALPHAO = 10.000

DZ	CN-C	CA-C	CLM-C	CY-C	CBL-C	CYN-C	CL-C	CD-C	CSL-C	CLN-C
.000	.30819	.01774	-.08968	-.00708	.00025	.00035	.30311	.05306	.00023	.00032
3.000	.31379	.01835	-.08724	-.00686	.00013	.00083	.30861	.05426	.00016	.00091
7.500	.33295	.01783	-.11660	-.00697	-.00002	.00136	.32774	.05575	.00007	.00135
15.000	.35565	.01724	-.14717	-.00784	-.00030	.00214	.35037	.05753	-.00013	.00216
30.000	.38768	.01503	-.18049	-.00939	-.00078	.00309	.38245	.05868	-.00050	.00315
45.000	.40706	.01326	-.19484	-.00891	-.00063	.00290	.40191	.05995	-.00037	.00295
60.000	.42549	.01168	-.20645	-.00853	-.00018	.00281	.42040	.05930	.00006	.00281
GRADIENT	.00338	.00000	-.00392	.00001	-.00004	.00013	.00336	.00036	-.00002	.00014

CA20 747/1 02 SI CARRIER DATA (SGN129) (26 NOV 75)

REFERENCE DATA

SREF = 5500.0000 SQ.FT. XMRP = 1339.9000 IN.XC
LREF = 327.7800 IN. YMRP = .0000 IN.YC
BREF = 2348.0400 IN. ZMRP = 190.8000 IN.ZC
SCALE = .0300

PARAMETRIC DATA

ALPHAC =	4.000	BETAC =	.000
ELV-IB =	.000	ELV-OB =	3.000
ELEVON =	5.000	MACH =	.600
BETAO =	.000	PHI =	.000
DX =	.000	DY =	.000

RN/L = 3.29 GRADIENT INTERVAL = .00/ 12.00

ALPHAO = 14.000

DZ	CN-C	CA-C	CLM-C	CY-C	CBL-C	CYN-C	CL-C	CD-C	CSL-C	CLN-C
.000	.21803	.01544	.02468	-.00544	.00047	-.00030	.21369	.04135	.00039	-.00035
3.000	.23009	.01532	.01547	-.00691	.00016	.00081	.22569	.04249	.00019	.00078
7.500	.25205	.01646	-.01049	-.00763	-.00003	.00156	.24742	.04593	.00008	.00154
15.000	.28984	.01804	-.06594	-.00693	-.00010	.00149	.28484	.05145	-.00000	.00149
30.000	.34084	.01666	-.12890	-.00831	-.00054	.00262	.33570	.05541	.00032	.00266
45.000	.37254	.01504	-.16003	-.00886	-.00068	.00303	.36740	.05711	-.00041	.00308
60.000	.39375	.01358	-.17869	-.00892	-.00063	.00303	.38864	.05767	-.00036	.00307
GRADIENT	.00456	.00015	-.00477	-.00028	-.00007	.00024	.00452	.00062	-.00004	.00025

CA20 747/1 02 SI CARRIER DATA (SGN130) (26 NOV 75)

REFERENCE DATA

SREF = 5500.0000 SQ.FT. XMRP = 1339.9000 IN.XC
LREF = 327.7800 IN. YMRP = .0000 IN.YC
BREF = 2348.0400 IN. ZMRP = 190.8000 IN.ZC
SCALE = .0300

PARAMETRIC DATA

ALPHAC =	4.000	BETAC =	.000
ELV-IB =	.000	ELV-OB =	3.000
ELEVON =	5.000	MACH =	.600
BETAO =	.000	PHI =	.000
DX =	10.000	DY =	.000

RN/L = 3.30 GRADIENT INTERVAL = .00/ 12.00

ALPHAO = 10.000

DZ	CN-C	CA-C	CLM-C	CY-C	CBL-C	CYN-C	CL-C	CD-C	CSL-C	CLN-C
.000	.32975	.01500	-.09122	-.00583	.00038	.00021	.32484	.05259	.00035	.00017
3.000	.33422	.01593	-.09386	-.00588	.00026	.00067	.32919	.05398	.00027	.00063
7.500	.34728	.01595	-.11952	-.00652	.00010	.00142	.34218	.05537	.00019	.00139
15.000	.36426	.01579	-.14702	-.00698	-.00018	.00196	.35908	.05699	-.00003	.00196
30.000	.39256	.01384	-.17899	-.00944	-.00059	.00311	.38743	.05800	-.00031	.00314
45.000	.40865	.01284	-.19318	-.00882	-.00065	.00292	.40354	.05869	-.00039	.00296
60.000	.42174	.01221	-.20523	-.00779	-.00072	.00263	.41662	.05944	-.00049	.00268
GRADIENT	.00238	.00012	-.00393	-.00010	-.00004	.00016	.00236	.00037	-.00002	.00016

CA20 747/1 02 S1 CARRIER DATA (SGN130) (26 NOV 75)

REFERENCE DATA

SREF = 5500.0000 SQ.FT. XMRP = 1339.9000 IN.XC
LREF = 327.7800 IN. YMRP = .0000 IN.YC
BREF = 2348.0400 IN. ZMRP = 190.8000 IN.ZC
SCALE = .0300

PARAMETRIC DATA

ALPHAC =	4.000	BETAC =	.000
ELV-IB =	.000	ELV-OB =	3.000
ELEVON =	5.000	MACH =	.600
BETAO =	.000	PHI =	.000
DX =	10.000	DY =	.000

RN/L = 3.31 GRADIENT INTERVAL = .00/ 12.00

ALPHAO = 14.000

DZ	CN-C	CA-C	CLM-C	CY-C	CBL-C	CYN-C	CL-C	CD-C	CSL-C	CLN-C
.000	.25409	.01017	.04692	-.00245	.00065	-.00129	.25010	.03988	.00046	-.00135
3.000	.26124	.01123	.04074	-.00463	.00032	.00009	.25710	.04169	.00028	.00005
7.500	.27876	.01126	.03757	-.00633	-.00003	.00132	.27431	.04553	.00005	.00131
15.000	.30955	.01515	-.05766	-.00679	-.00018	.00187	.30474	.05063	-.00004	.00187
30.000	.35074	.01500	-.12285	-.00806	-.00056	.00272	.34572	.05478	-.00033	.00275
45.000	.37812	.01391	-.15591	-.00869	-.00072	.00309	.37306	.05666	-.00045	.00314
60.000	.39633	.01294	-.17558	-.00861	-.00077	.00304	.39127	.05750	-.00050	.00310
GRADIENT	.00334	.00042	-.00541	-.00051	-.00009	.00034	.00327	.00076	-.00005	.00035

CA20 747/1 02 S1 CARRIER DATA (SGN131) (26 NOV 75)

REFERENCE DATA

SREF = 5500.0000 SQ.FT. XMRP = 1339.9000 IN.XC
LREF = 327.7800 IN. YMRP = .0000 IN.YC
BREF = 2348.0400 IN. ZMRP = 190.8000 IN.ZC
SCALE = .0300

PARAMETRIC DATA

ALPHAC =	4.000	BETAC =	.000
ELV-IB =	.000	ELV-OB =	3.000
ELEVON =	5.000	MACH =	.600
BETAO =	.000	PHI =	.000
DX =	20.000	DY =	.000

RN/L = 3.29 GRADIENT INTERVAL = .00/ 12.00

ALPHAO = 10.000

DZ	CN-C	CA-C	CLM-C	CY-C	CBL-C	CYN-C	CL-C	CD-C	CSL-C	CLN-C
.000	.35001	.01271	-.11012	-.00663	.00011	.00084	.34523	.05243	.00015	.00082
3.000	.35315	.01374	-.11243	-.00719	-.00008	.00151	.34825	.05378	.00002	.00150
7.500	.36325	.01438	-.13003	-.00840	-.00036	.00232	.35823	.05548	-.00017	.00234
15.000	.37707	.01448	-.15427	-.00885	-.00064	.00285	.37195	.05703	-.00040	.00289
30.000	.39859	.01350	-.18116	-.01035	-.00103	.00370	.39345	.05830	-.00069	.00378
45.000	.41237	.01268	-.19357	-.00933	-.00093	.00332	.40725	.05692	-.00063	.00339
60.000	.42435	.01164	-.20076	-.00772	-.00072	.00271	.41925	.05934	-.00048	.00276
GRADIENT	.00180	.00022	-.00275	-.00024	-.00006	.00020	.00177	.00040	-.00004	.00020

CA20 747/1 02 SI . CARRIER DATA (5GN131) (26 NOV 75)

REFERENCE DATA

SREF =	5500.0000 SQ.FT.	XMRP =	1339.9000 IN.XC
LREF =	327.7800 IN.	YMRP =	.0000 IN.YC
BREF =	2348.0400 IN.	ZMRP =	190.8000 IN.ZC
SCALE =	.0300		

PARAMETRIC DATA

ALPHAC =	4.000	BETAC =	.000
ELV-IB =	.000	ELV-OB =	3.000
ELEVON =	5.000	MACH =	.600
BETAO =	.000	PHI =	.000
DX =	20.000	DY =	.000

RN/L = 3.30 GRADIENT INTERVAL = .00/ 12.00

ALPHAO = 14.000

DZ	CN-C	CA-C	CLM-C	CY-C	CBL-C	CYN-C	CL-C	CD-C	CSL-C	CLN-C
.000	.28590	.00726	.03557	-.00538	.00026	-.00003	.28804	.04031	.00021	-.00006
3.000	.29156	.00897	.03037	-.00612	.00006	.00072	.28749	.04261	.00008	.00070
7.500	.30601	.01131	-.00069	-.00721	-.00015	.00168	.30162	.04645	-.00003	.00168
15.000	.32918	.01329	-.05643	-.00846	-.00047	.00267	.32445	.05064	-.00024	.00270
30.000	.36346	.01322	-.12009	-.00985	-.00091	.00342	.35655	.05435	-.00060	.00349
45.000	.38539	.01303	-.15370	-.00951	-.00089	.00336	.38039	.05545	-.00058	.00342
60.000	.40057	.01251	-.17332	-.00978	-.00099	.00346	.39554	.05752	-.00068	.00353
GRADIENT	.00272	.00054	-.00500	-.00024	-.00005	.00023	.00265	.00082	-.00003	.00023

CA20 747/1 02 SI CARRIER DATA (5GN132) (26 NOV 75)

REFERENCE DATA

SREF =	5500.0000 SQ.FT.	XMRP =	1339.9000 IN.XC
LREF =	327.7800 IN.	YMRP =	.0000 IN.YC
BREF =	2348.0400 IN.	ZMRP =	190.8000 IN.ZC
SCALE =	.0300		

PARAMETRIC DATA

ALPHAC =	8.000	BETAC =	.000
ELV-IB =	.000	ELV-OB =	3.000
ELEVON =	5.000	MACH =	.600
BETAO =	.000	PHI =	.000
DX =	.000	DY =	.000

RN/L = 3.29 GRADIENT INTERVAL = .00/ 12.00

ALPHAO = 10.000

DZ	CN-C	CA-C	CLM-C	CY-C	CBL-C	CYN-C	CL-C	CD-C	CSL-C	CLN-C
.000	.75079	-.02853	-.27188	-.00943	-.00035	.00100	.74270	.10423	-.00027	.00107
3.000	.75587	-.02941	-.27163	-.01027	-.00049	.00178	.74786	.10424	-.00028	.00187
7.500	.76349	-.03038	-.27119	-.01103	-.00062	.00259	.75553	.10461	-.00026	.00269
15.000	.77390	-.03156	-.26796	-.01117	-.00076	.00334	.76598	.10525	-.00027	.00346
30.000	.79099	-.03305	-.26422	-.01058	-.00058	.00353	.78307	.10676	-.00006	.00361
45.000	.80162	-.03339	-.25678	-.00959	-.00023	.00334	.79360	.10827	.00025	.00335
60.000	.80920	-.03317	-.25069	-.00992	.00004	.00349	.80103	.10980	.00054	.00346
GRADIENT	.00169	-.00024	.00009	-.00021	-.00004	.00021	.00171	.00005	.00000	.00021

ORIGINAL PAGE IS OF POOR QUALITY

CA20 747/1 02 SI CARRIER DATA (SGN132) (26 NOV 75)

REFERENCE DATA

SREF = 5500.0000 SQ.FT. XMRP = 1339.9000 IN.XC
LREF = 327.7800 IN. YMRP = .0000 IN.YC
BREF = 2348.0400 IN. ZMRP = 190.8000 IN.ZC
SCALE = .0300

PARAMETRIC DATA

ALPHAC =	8.000	BETAC =	.000
ELV-IB =	.000	ELV-OB =	3.000
ELEVON =	5.000	MACH =	.600
BETAO =	.000	PHI =	.000
DX =	.000	DY =	.000

RN/L = 3.28 GRADIENT INTERVAL = .00/ 12.00

ALPHAO = 14.000

DZ	CN-C	CA-C	CLM-C	CY-C	CBL-C	CYN-C	CL-C	CD-C	CSL-C	CLN-C
.000	.66518	-.02951	-.15665	-.01001	.00005	.00088	.65656	.08839	.00010	.00089
3.000	.67568	-.02941	-.16495	-.01017	-.00015	.00153	.66888	.09032	.00001	.00155
7.500	.69573	-.03045	-.19111	-.01052	-.00030	.00220	.68881	.09278	-.00001	.00224
15.000	.71974	-.03178	-.21628	-.01136	-.00067	.00306	.71268	.09563	-.00024	.00315
30.000	.75498	-.03361	-.23801	-.01188	-.00124	.00392	.74771	.09995	-.00064	.00410
45.000	.77750	-.03425	-.24550	-.01154	-.00133	.00372	.76999	.10323	-.00077	.00392
60.000	.79336	-.03371	-.24737	-.01045	-.00143	.00334	.78552	.10662	-.00093	.00357
GRADIENT	.00410	-.00013	-.00469	-.00007	-.00005	.00017	.00406	.00058	-.00001	.00018

CA20 747/1 02 SI CARRIER DATA (SGN133) (26 NOV 75)

REFERENCE DATA

SREF = 5500.0000 SQ.FT. XMRP = 1339.9000 IN.XC
LREF = 327.7800 IN. YMRP = .0000 IN.YC
BREF = 2348.0400 IN. ZMRP = 190.8000 IN.ZC
SCALE = .0300

PARAMETRIC DATA

ALPHAC =	8.000	BETAC =	.000
ELV-IB =	.000	ELV-OB =	3.000
ELEVON =	5.000	MACH =	.600
BETAO =	.000	PHI =	.000
DX =	10.000	DY =	.000

RN/L = 3.32 GRADIENT INTERVAL = .00/ 12.00

ALPHAO = 10.000

DZ	CN-C	CA-C	CLM-C	CY-C	CBL-C	CYN-C	CL-C	CD-C	CSL-C	CLN-C
.000	.76259	-.03038	-.26944	-.00772	.00059	.00083	.75464	.10446	.00063	.00074
3.000	.76628	-.03079	-.26749	-.00824	.00039	.00152	.75834	.10469	.00054	.00145
7.500	.77271	-.03144	-.26715	-.00922	.00016	.00238	.76479	.10516	.00047	.00234
15.000	.78185	-.03227	-.26567	-.01107	-.00021	.00351	.77394	.10594	.00030	.00352
30.000	.79550	-.03295	-.26090	-.01070	-.00024	.00367	.78749	.10763	.00030	.00369
45.000	.80476	-.03231	-.25366	-.01024	.00026	.00347	.79651	.10958	.00076	.00340
60.000	.81389	-.03154	-.24903	-.01041	.00038	.00371	.80537	.11222	.00092	.00362
GRADIENT	.00136	-.00014	.00029	-.00020	-.00006	.00021	.00135	.00009	-.00002	.00021

CA20 747/1 02 S1 CARRIER DATA (SGN133) (26 NOV 75)

REFERENCE DATA

SREF =	5500.0000 SQ.FT.	XMRP =	1339.9000	IN.XC	
LREF =	327.7800 IN.	YMRP =	.0000	IN.YC	
BREF =	2348.0400 IN.	ZMRP =	190.8000	IN.ZC	
SCALE =	.0300				

PARAMETRIC DATA

ALPHAC =	8.000	BETAC =	.000
ELV-IB =	.000	ELV-OB =	3.000
ELEVON =	5.000	MACH =	.600
BETAO =	.000	PHI =	.000
DX =	10.000	DY =	.000

RN/L = 3.30 GRADIENT INTERVAL = .00/ 12.00

ALPHAO = 14.000

DZ	CN-C	CA-C	CLM-C	CY-C	CBL-C	CYN-C	CL-C	CD-C	CSL-C	CLN-C
.000	.70026	-.03173	-.14785	-.00897	-.00007	.00103	.69349	.09230	.00001	.00105
3.000	.70775	-.03135	-.15678	-.00929	-.00023	.00166	.70080	.09398	-.00004	.00171
7.500	.72035	-.03186	-.17942	-.01006	-.00046	.00240	.71330	.09566	-.00014	.00247
15.000	.73743	-.03278	-.20372	-.01146	-.00077	.00324	.73027	.09772	-.00030	.00335
30.000	.76451	-.03360	-.22866	-.01275	-.00141	.00426	.75709	.10162	-.00075	.00446
45.000	.78244	-.03365	-.23577	-.01196	-.00140	.00385	.77476	.10469	-.00081	.00406
60.000	.79497	-.03327	-.23957	-.01162	-.00138	.00381	.78703	.10723	-.00080	.00402
GRADIENT	.00269	-.00002	-.00427	-.00015	-.00005	.00018	.00265	.00044	-.00002	.00019

CA20 747/1 02 S1 CARRIER DATA (SGN134) (26 NOV 75)

REFERENCE DATA

SREF =	5500.0000 SQ.FT.	XMRP =	1339.9000	IN.XC	
LREF =	327.7800 IN.	YMRP =	.0000	IN.YC	
BREF =	2348.0400 IN.	ZMRP =	190.8000	IN.ZC	
SCALE =	.0300				

PARAMETRIC DATA

ALPHAC =	8.000	BETAC =	.000
ELV-IB =	.000	ELV-OB =	3.000
ELEVON =	5.000	MACH =	.600
BETAO =	.000	PHI =	.000
DX =	20.000	DY =	.000

RN/L = 3.27 GRADIENT INTERVAL = .00/ 12.00

ALPHAO = 10.000

DZ	CN-C	CA-C	CLM-C	CY-C	CBL-C	CYN-C	CL-C	CD-C	CSL-C	CLN-C
.000	.78107	-.03206	-.28803	-.01017	-.00056	.00191	.77313	.10601	-.00033	.00201
3.000	.78210	-.03170	-.27938	-.01118	-.00085	.00266	.77408	.10654	-.00048	.00279
7.500	.78642	-.03218	-.27675	-.01253	-.00118	.00336	.77842	.10682	-.00069	.00354
15.000	.79519	-.03276	-.27565	-.01360	-.00180	.00408	.78716	.10777	-.00116	.00436
30.000	.[illegible]523	-.03141	-.26147	-.01316	-.00143	.00415	.79681	.11085	-.00079	.00436
45.000	.81033	-.03019	-.25183	-.01222	.00005	.00376	.80162	.11293	.00060	.00372
60.000	.81922	-.02959	-.24785	-.01105	.00049	.00395	.81027	.11506	.00106	.00383
GRADIENT	.00073	-.00002	.00143	-.00031	-.00008	.00019	.00073	.00011	-.00005	.00020

CA20 747/1 02 S1 CARRIER DATA (SGN134) (26 NOV 75)

REFERENCE DATA

SREF = 5500.0000 SQ.FT. XMRP = 1339.9000 IN.XC
LREF = 327.7800 IN. YMRP = .0000 IN.YC
BREF = 2348.0400 IN. ZMRP = 190.8000 IN.ZC
SCALE = .0300

PARAMETRIC DATA

ALPHAC = 8.000 BETAC = .000
ELV-IB = .000 ELV-OB = 3.000
ELEVON = 5.000 MACH = .600
BETAO = .000 PHI = .000
DX = 20.000 DY = .000

RN/L = 3.28 GRADIENT INTERVAL = .00/ 12.00

ALPHAO = 14.000

DZ	CN-C	CA-C	CLM-C	CY-C	CBL-C	CYN-C	CL-C	CD-C	CSL-C	CLN-C
.000	.72308	-.03331	-.15764	-.01027	-.00040	.00172	.71624	.09470	-.00020	.00179
3.000	.72761	-.03223	-.16056	-.01155	-.00078	.00264	.72051	.09555	-.00042	.00276
7.500	.73745	-.03189	-.17680	-.01308	-.00104	.00372	.73014	.09860	-.00048	.00387
15.000	.75102	-.03259	-.19992	-.01411	-.00152	.00432	.74362	.10027	-.00065	.00454
30.000	.77105	-.03274	-.21999	-.01495	-.00187	.00485	.76338	.10360	-.00110	.00512
45.000	.78708	-.03261	-.22572	-.01278	-.00156	.00404	.77914	.10651	-.00093	.00428
60.000	.79655	-.03284	-.23167	-.01257	-.00131	.00422	.78851	.10793	-.00067	.00441
GRADIENT	.00194	.00018	-.00264	-.00037	-.00008	.00026	.00188	.00051	-.00004	.00028

CA20 747/1 02 S1 CARRIER DATA (SGN135) (26 NOV 75)

REFERENCE DATA

SREF = 5500.0000 SQ.FT. XMRP = 1339.9000 IN.XC
LREF = 327.7800 IN. YMRP = .0000 IN.YC
BREF = 2348.0400 IN. ZMRP = 190.8000 IN.ZC
SCALE = .0300

PARAMETRIC DATA

ALPHAC = 4.000 BETAC = -5.000
ELV-IB = .000 ELV-OB = 3.000
ELEVON = 5.000 MACH = .600
BETAO = .000 PHI = .000
DX = .000 DY = 10.000

RUN NO. 0/ 0 RN/L = 3.27 GRADIENT INTERVAL = .00/ 12.00

ALPHAO	DZ	CN-C	CA-C	CLM-C	CY-C	CBL-C	CYN-C	CL-C	CD-C	CSL-C	CLN-C
10.000	.000	.31108	.01273	-.17939	.06740	.02323	-.01953	.30548	.04808	.02091	-.02197
10.000	3.000	.32070	.01293	-.18107	.06887	.02232	-.01850	.31603	.04928	.02011	-.02085
10.000	7.500	.33357	.01288	-.18622	.06445	.02074	-.01647	.32883	.05058	.01874	-.01886
10.000	15.000	.35168	.01241	-.19048	.05873	.01808	-.01236	.34689	.05201	.01653	-.01429
10.000	30.000	.37719	.01075	-.19294	.05348	.01404	-.00723	.37244	.05302	.01305	-.00878
10.000	45.000	.39572	.00864	-.20101	.06339	.01373	-.01139	.39109	.05288	.01231	-.01288
10.000	60.000	.41409	.00652	-.20832	.07185	.01324	-.01487	.40958	.05268	.01145	-.01629
	GRADIENT	.00299	.00002	-.00093	-.00040	-.00033	.00041	.00297	.00033	-.00029	.00044

CA20 747/1 02 S1 CARRIER DATA (SGN136) (26 NOV 75)

REFERENCE DATA

SREF =	5500.0000 SQ.FT.	XMRP =	1339.9000	IN.XC	
LREF =	327.7800 IN.	YMRP =	.0000	IN.YC	
BREF =	2348.0400 IN.	ZMRP =	190.8000	IN.ZC	
SCALE =	.0300				

PARAMETRIC DATA

ALPHAC =	4.000	BETAC =	-5.000
ELV-IB =	.000	ELV-OB =	3.000
ELEVON =	5.000	MACH =	.600
BETAO =	.000	PHI =	.000
DX =	10.000	DY =	10.000

RUN NO. 0/ 0 RN/L = 3.26 GRADIENT INTERVAL = .00/ 12.00

ALPHAO	DZ	CN-C	CA-C	CLM-C	CY-C	CBL-C	CYN-C	CL-C	CD-C	CSL-C	CLN-C
10.000	.000	.33968	.00832	-.18375	.07411	.02197	-.02132	.33539	.04668	.01946	-.02362
10.000	3.000	.34567	.00883	-.18487	.07365	.02152	-.02055	.34129	.04782	.01909	-.02280
10.000	7.500	.35499	.00917	-.18623	.07038	.02042	-.01828	.35052	.04913	.01824	-.02043
10.000	15.000	.36911	.00917	-.19142	.06345	.01783	-.01372	.36457	.05060	.01614	-.01562
10.000	30.000	.38917	.00872	-.19546	.05725	.01405	-.00859	.38457	.05225	.01291	-.01013
10.000	45.000	.40463	.00687	-.20302	.06441	.01377	-.01180	.40014	.05203	.01230	-.01329
10.000	60.000	.41893	.00467	-.21181	.07547	.01464	-.01783	.41458	.05134	.01254	-.01938
	GRADIENT	.00204	.00011	-.00033	-.00052	-.00021	.00041	.00202	.00032	-.00016	.00043

CA20 747/1 02 S1 CARRIER DATA (SGN137) (26 NOV 75)

REFERENCE DATA

SREF =	5500.0000 SQ.FT.	XMRP =	1339.9000	IN.XC	
LREF =	327.7800 IN.	YMRP =	.0000	IN.YC	
BREF =	2348.0400 IN.	ZMRP =	190.8000	IN.ZC	
SCALE =	.0300				

PARAMETRIC DATA

ALPHAC =	4.000	BETAC =	.000
ELV-IB =	.000	ELV-OB =	3.000
ELEVON =	5.000	MACH =	.600
BETAO =	.000	PHI =	.000
DX =	.000	DY =	10.000

RUN NO. 0/ 0 RN/L = 3.35 GRADIENT INTERVAL = .00/ 12.00

ALPHAO	DZ	CN-C	CA-C	CLM-C	CY-C	CBL-C	CYN-C	CL-C	CD-C	CSL-C	CLN-C
10.000	.000	.29303	.01901	-.10156	-.01780	.00935	-.00499	.28791	.05275	.00873	-.00595
10.000	3.000	.30391	.01903	-.11262	-.01739	.00763	-.00266	.29872	.05390	.00726	-.00345
10.000	7.500	.31953	.01842	-.12973	-.01925	.00579	.00041	.31432	.05493	.00575	-.00021
10.000	15.000	.34138	.01729	-.15498	-.02209	.00337	.00430	.33617	.05609	.00375	.00392
10.000	30.000	.37059	.01478	-.18343	-.02609	.00006	.00927	.36548	.05665	.00098	.00921
10.000	45.000	.39119	.01299	-.19959	-.01998	-.00051	.00730	.38615	.05701	.00020	.00731
10.000	60.000	.41174	.01122	-.21638	-.01473	-.00126	.00577	.40677	.05741	-.00070	.00586
	GRADIENT	.00353	-.00008	-.00376	-.00021	-.00047	.00072	.00352	.00029	-.00039	.00076

ORIGINAL PAGE IS OF POOR QUALITY

CA20 747/1 02 S1 CARRIER DATA (SGN138) (26 NOV 75)

REFERENCE DATA

SREF =	5500.0000 SQ.FT.	XMRP =	1339.9000 IN.XC		
LREF =	327.7800 IN.	YMRP =	.0000 IN.YC		
BREF =	2348.0400 IN.	ZMRP =	190.8000 IN.ZC		
SCALE =	.0300				

PARAMETRIC DATA

ALPHAC =	4.000	BETAC =	.000
ELV-IB =	.000	ELV-OB =	3.000
ELEVON =	5.000	MACH =	.600
BETAO =	.000	PHI =	.000
DX =	10.000	DY =	10.000

RUN NO. 0/ 0 RN/L = 3.29 GRADIENT INTERVAL = .00/ 12.00

ALPHAO	DZ	CN-C	CA-C	CLM-C	CY-C	CBL-C	CYN-C	CL-C	CD-C	CSL-C	CLN-C
10.000	.000	.32296	.01498	-.11195	-.01282	.00778	-.00529	.31809	.05187	.00713	-.00608
10.000	3.000	.33005	.01542	-.11914	-.01310	.00639	-.00327	.32509	.05305	.00595	-.00393
10.000	7.500	.34135	.01534	-.13529	-.01598	.00478	-.00028	.33634	.05415	.00467	-.00078
10.000	15.000	.35744	.01493	-.15809	-.01971	.00284	.00350	.35239	.05542	.00324	.00316
10.000	30.000	.38238	.01284	-.18601	-.02430	-.00008	.00857	.37741	.05595	.00076	.00853
10.000	45.000	.39993	.01145	-.20239	-.01933	-.00065	.00677	.39500	.05640	.00001	.00680
10.000	60.000	.41619	.01038	-.21694	-.01100	-.00043	.00273	.41129	.05704	-.00020	.00275
	GRADIENT	.00246	.00004	-.00315	-.00044	-.00040	.00067	.00244	.00030	-.00032	.00071

CA20 747/1 02 S1 CARRIER DATA (SGN139) (26 NOV 75)

REFERENCE DATA

SREF =	5500.0000 SQ.FT.	XMRP =	1339.9000 IN.XC		
LREF =	327.7800 IN.	YMRP =	.0000 IN.YC		
BREF =	2348.0400 IN.	ZMRP =	190.8000 IN.ZC		
SCALE =	.0300				

PARAMETRIC DATA

ALPHAC =	4.000	BETAC =	5.000
ELV-IB =	.000	ELV-OB =	3.000
ELEVON =	5.000	MACH =	.600
BETAO =	.000	PHI =	.000
DX =	.000	DY =	10.000

RUN NO. 0/ 0 RN/L = 3.25 GRADIENT INTERVAL = .00/ 12.00

ALPHAO	DZ	CN-C	CA-C	CLM-C	CY-C	CBL-C	CYN-C	CL-C	CD-C	CSL-C	CLN-C
10.000	.000	.30728	.01288	-.06154	-.09841	-.00326	.00592	.30271	.04770	-.00242	.00640
10.000	3.000	.31940	.01244	-.08288	-.10031	-.00555	.01088	.31481	.04853	-.00418	.01157
10.000	7.500	.33564	.01134	-.11234	-.10522	-.00803	.01663	.33108	.04914	-.00604	.01755
10.000	15.000	.35612	.00972	-.15169	-.10806	-.01055	.02131	.35161	.04967	-.00806	.02246
10.000	30.000	.38567	.00714	-.19148	-.10916	-.01309	.02501	.38127	.05019	-.01020	.02641
10.000	45.000	.40450	.00555	-.20549	-.10505	-.01382	.02433	.40017	.05057	-.01099	.02581
10.000	60.000	.42357	.00399	-.21983	-.10110	-.01456	.02369	.41929	.05102	-.01180	.02525
	GRADIENT	.00377	-.00021	-.00676	-.00092	-.00063	.00142	.00377	.00019	-.00048	.00147

CA20 747/1 02 S1 CARRIER DATA (5GN140) (26 NOV 75)

REFERENCE DATA

SREF = 5500.0000 SQ.FT. XMRP = 1339.9000 IN.XC
LREF = 327.7800 IN. YMRP = .0000 IN.YC
BREF = 2348.0400 IN. ZMRP = 190.8000 IN.ZC
SCALE = .0300

PARAMETRIC DATA

ALPHAC =	4.000	BETAC =	5.000
ELV-IB =	.000	ELV-OB =	3.000
ELEVON =	5.000	MACH =	.600
BETAO =	.000	PHI =	.000
DX =	10.000	DY =	10.000

RUN NO. 0/ 0 RN/L = 3.26 GRADIENT INTERVAL = .00/ 12.00

ALPHAO	DZ	CN-C	CA-C	CLM-C	CY-C	CBL-C	CYN-C	CL-C	CD-C	CSL-C	CLN-C
10.000	.000	.33610	.01031	-.07534	-.08980	-.00452	.00491	.33164	.04816	-.00377	.00553
10.000	3.000	.34318	.01037	-.09118	-.09257	-.00633	.00938	.33867	.04896	-.00511	.01016
10.000	7.500	.35422	.00952	-.11739	-.09926	-.00866	.01562	.34974	.04927	-.00677	.01661
10.000	15.000	.37138	.00833	-.15215	-.10402	-.01065	.02050	.36693	.04988	-.00825	.02167
10.000	30.000	.39636	.00588	-.19183	-.10673	-.01326	.02457	.39203	.05006	-.01042	.02599
10.000	45.000	.41255	.00461	-.20393	-.10253	-.01377	.02360	.40827	.05048	-.01103	.02508
10.000	60.000	.42687	.00370	-.20948	-.09664	-.01379	.02119	.42260	.05107	-.01130	.02268
	GRADIENT	.00242	-.00011	-.00562	-.00128	-.00055	.00142	.00242	.00014	-.00040	.00147

CA20 747/1 01 S1 CARRIER DATA (5GN141) (26 NOV 75)

REFERENCE DATA

SREF = 5500.0000 SQ.FT. XMRP = 1339.9000 IN.XC
LREF = 327.7800 IN. YMRP = .0000 IN.YC
BREF = 2348.0400 IN. ZMRP = 190.8000 IN.ZC
SCALE = .0300

PARAMETRIC DATA

ALPHAC =	4.000	BETAC =	.000
ELV-IB =	10.000	ELV-OB =	13.000
ELEVON =	5.000	MACH =	.600
BETAO =	.000	PHI =	.000
DX =	.000	DY =	.000

RN/L = 3.26 GRADIENT INTERVAL = .00/ 12.00

ALPHAO = 10.000

DZ	CN-C	CA-C	CLM-C	CY-C	CBL-C	CYN-C	CL-C	CD-C	CSL-C	CLN-C
.000	.34966	.02152	-.27845	-.00821	-.00040	.00138	.34426	.05986	-.00031	.00141
3.000	.35661	.02135	-.28259	-.00820	-.00052	.00164	.35121	.06038	-.00041	.00168
7.500	.36950	.02104	-.30594	-.00842	-.00058	.00214	.36407	.06131	-.00041	.00218
15.000	.38975	.02026	-.33268	-.00865	-.00064	.00251	.38431	.06254	-.00043	.00255
30.000	.41809	.01842	-.36814	-.00909	-.00097	.00284	.41271	.06348	-.00072	.00292
45.000	.43697	.01633	-.38456	-.00911	-.00106	.00302	.43172	.06325	-.00080	.00310
60.000	.45758	.01428	-.40503	-.00932	-.00125	.00328	.45245	.06322	-.00096	.00338
GRADIENT	.00266	-.00006	-.00379	-.00003	-.00002	.00010	.00266	.00019	-.00001	.00010

DATE 26 NOV 75 TABULATED SOURCE DATA - CA20

CA20 747/1 01 S1 CARRIER DATA (SGN141) (26 NOV 75)

REFERENCE DATA

SREF =	5500.0000 SQ.FT.	XMRP =	1339.9000	IN.XC	
LREF =	327.7800 IN.	YMRP =	.0000	IN.YC	
BREF =	2348.0400 IN.	ZMRP =	190.8000	IN.ZC	
SCALE =	.0300				

PARAMETRIC DATA

ALPHAC =	4.000	BETAC =	.000
ELV-IB =	10.000	ELV-OB =	13.000
ELEVON =	5.000	MACH =	.600
BETAO =	.000	PHI =	.000
DX =	.000	DY =	.000

RN/L = 3.20 GRADIENT INTERVAL = .00/ 12.00

ALPHAO = 14.000

DZ	CN-C	CA-C	CLM-C	CY-C	CBL-C	CYN-C	CL-C	CD-C	CSL-C	CLN-C
.000	.26254	.01841	-.14952	-.00702	.00020	.00051	.25787	.04809	-.00020	.00048
3.000	.27000	.01858	-.15466	-.00644	-.00026	.00159	.26528	.04900	-.00015	.00160
7.500	.29132	.02046	-.19250	-.00882	-.00048	.00208	.28631	.05300	-.00032	.00211
15.000	.32688	.02183	-.25220	-.00777	-.00046	.00181	.32156	.05790	-.00032	.00164
30.000	.37255	.02032	-.31638	-.00960	-.00105	.00307	.36719	.06089	-.00079	.00316
45.000	.40335	.01826	-.35085	-.00969	-.00107	.00310	.39806	.06186	-.00080	.00319
60.000	.43431	.01621	-.38575	-.00978	-.00109	.00313	.42908	.06285	-.00082	.00321
GRADIENT	.00391	.00029	-.00593	-.00023	-.00009	.00020	.00386	.00067	-.00007	.00021

CA20 747/1 01 S1 CARRIER DATA (SGN142) (26 NOV 75)

REFERENCE DATA

SREF =	5500.0000 SQ.FT.	XMRP =	1339.9000	IN.XC	
LREF =	327.7800 IN.	YMRP =	.0000	IN.YC	
BREF =	2348.0400 IN.	ZMRP =	190.8000	IN.ZC	
SCALE =	.0300				

PARAMETRIC DATA

ALPHAC =	4.000	BETAC =	.000
ELV-IB =	-10.000	ELV-OB =	-7.000
ELEVON =	5.000	MACH =	.600
BETAO =	.000	PHI =	.000
DX =	.000	DY =	.000

RN/L = 3.27 GRADIENT INTERVAL = .00/ 12.00

ALPHAO = 10.000

DZ	CN-C	CA-C	CLM-C	CY-C	CBL-C	CYN-C	CL-C	CD-C	CSL-C	CLN-C
.000	.22928	.01933	.21024	-.00981	-.00050	.00227	.22467	.04568	-.00032	.00230
3.000	.23756	.01925	.20195	-.00935	-.00066	.00263	.23292	.04643	-.00044	.00268
7.500	.25222	.01891	.18526	-.01007	-.00084	.00300	.24755	.04755	-.00058	.00307
15.000	.27066	.01911	.16028	-.01012	-.00095	.00335	.26588	.04959	-.00065	.00342
30.000	.29690	.01710	.14092	-.01093	-.00128	.00372	.29221	.05020	-.00094	.00382
45.000	.31447	.01561	.13160	-.01054	-.00109	.00380	.30984	.05048	-.00075	.00388
60.000	.33408	.01383	.12109	-.01062	-.00106	.00401	.32954	.05066	-.00070	.00409
GRADIENT	.00307	-.00006	-.00336	-.00004	-.00004	.00010	.00307	.00025	-.00003	.00010

DATE 26 NOV 75 TABULATED SOURCE DATA - CA20

CA20 747/1 01 S1 CARRIER DATA (5GN142) (26 NOV 75)

REFERENCE DATA

SREF =	5500.0000 SQ.FT.	XMRP =	1339.9000	IN.XC
LREF =	327.7800 IN.	YMRP =	.0000	IN.YC
BREF =	2348.0400 IN.	ZMRP =	190.8000	IN.ZC
SCALE =	.0300			

PARAMETRIC DATA

ALPHAC =	4.000	BETAC =	.000
ELV-IB =	-10.000	ELV-OB =	-7.000
ELEVON =	5.000	MACH =	.600
BETAO =	.000	PHI =	.000
DX =	.000	DY =	.000

RN/L = 3.23 GRADIENT INTERVAL = .00/ 12.00

ALPHAO = 14.000

DZ	CN-C	CA-C	CLM-C	CY-C	CBL-C	CYN-C	CL-C	CD-C	CSL-C	CLN-C
.000	.15219	.01556	.30348	-.00900	-.00003	.00135	.14833	.03416	.00006	.00134
3.000	.16253	.01596	.28401	-.00996	-.00030	.00230	.15859	.03561	-.00011	.00231
7.500	.17862	.01725	.26364	-.01111	-.00068	.00317	.17446	.03851	-.00040	.00321
15.000	.21032	.01919	.22448	-.01016	-.00071	.00298	.20582	.04363	-.00045	.00303
30.000	.25381	.01853	.18159	-.01125	-.00108	.00392	.24918	.04732	-.00073	.00400
45.000	.28207	.01722	.15908	-.01107	-.00122	.00392	.27743	.04884	-.00087	.00401
60.000	.31026	.01592	.13653	-.01068	-.00135	.00376	.30562	.05035	-.00101	.00387
GRADIENT	.00353	.00023	-.00525	-.00028	-.00009	.00024	.00349	.00059	-.00006	.00025

CA20 747/1 01 S1 CARRIER DATA (5GN143) (26 NOV 75)

REFERENCE DATA

SREF =	5500.0000 SQ.FT.	XMRP =	1339.9000	IN.XC
LREF =	327.7800 IN.	YMRP =	.0000	IN.YC
BREF =	2348.0400 IN.	ZMRP =	190.8000	IN.ZC
SCALE =	.0300			

PARAMETRIC DATA

ALPHAC =	4.000	BETAC =	.000
RUD-U =	15.000	RUD-L =	15.000
ELEVON =	5.000	AILRON =	.000
BETAO =	.000	PHI =	.000
DX =	.000	DY =	.000

RN/L = 3.27 GRADIENT INTERVAL = .00/ 12.00

ALPHAO = 10.000

DZ	CN-C	CA-C	CLM-C	CY-C	CBL-C	CYN-C	CL-C	CD-C	CSL-C	CLN-C
.000	.30490	.02179	-.09020	.03165	.00413	-.02115	.29971	.05559	.00191	-.02147
3.000	.31203	.02191	-.09665	.03404	.00423	-.02191	.30679	.05641	.00194	-.02224
7.500	.32811	.02188	-.12428	.03623	.00432	-.02286	.32281	.05795	.00193	-.02319
15.000	.34817	.02149	-.14722	.03709	.00420	-.02315	.34282	.05955	.00178	-.02346
30.000	.37647	.01962	-.17449	.03802	.00399	-.02338	.37119	.06047	.00155	-.02367
45.000	.39398	.01802	-.18741	.03930	.00420	-.02398	.38878	.06059	.00171	-.02429
60.000	.41363	.01630	-.20325	.04037	.00430	-.02443	.40851	.06080	.00176	-.02474
GRADIENT	.00313	.00001	-.00467	.00060	.00003	-.00023	.00312	.00032	.00000	-.00023

CA20 747/1 01 S1 CARRIER DATA (SGN143) (26 NOV 75)

REFERENCE DATA

SREF =	5500.0000 SQ.FT.	XMRP =	1339.9000	IN.XC	
LREF =	327.7800 IN.	YMRP =	.0000	IN.YC	
BREF =	2348.0400 IN.	ZMRP =	190.8000	IN.ZC	
SCALE =	.0300				

PARAMETRIC DATA

ALPHAC =	4.000	BETAC =	.000
RUD-U =	15.000	RUD-L =	15.000
ELEVON =	5.000	AILRON =	.000
BETAO =	.000	PHI =	.000
DX =	.000	DY =	.000

RN/L = 3.23 GRADIENT INTERVAL = .00/ 12.00

ALPHAO = 14.000

DZ	CN-C	CA-C	CLM-C	CY-C	CBL-C	CYN-C	CL-C	CD-C	CSL-C	CLN-C
.000	.22182	.01932	.01959	.03478	.00509	-.02300	.21727	.04486	.00266	-.02341
3.000	.23055	.01983	.00830	.03557	.00491	-.02292	.22591	.04623	.00250	-.02331
7.500	.24979	.02104	-.01941	.03583	.00481	-.02288	.24493	.04933	.00240	-.02326
15.000	.28421	.02267	-.07135	.03964	.00497	-.02468	.27903	.05439	.00238	-.02507
30.000	.33046	.02175	-.12747	.03873	.00434	-.02382	.32517	.05906	.00185	-.02415
45.000	.36019	.02008	-.15700	.03909	.00436	-.02395	.35493	.05932	.00185	-.02428
60.000	.39002	.01642	-.18681	.03963	.00440	-.02417	.38480	.06060	.00189	-.02450
GRADIENT	.00377	.00023	-.00528	.00013	-.00004	.00002	.00373	.00060	-.00003	.00002

CA20 747/1 02 S1 CARRIER DATA (SGN144) (26 NOV 75)

REFERENCE DATA

SREF =	5500.0000 SQ.FT.	XMRP =	1339.9000	IN.XC	
LREF =	327.7800 IN.	YMRP =	.0000	IN.YC	
BREF =	2348.0400 IN.	ZMRP =	190.8000	IN.ZC	
SCALE =	.0300				

PARAMETRIC DATA

ALPHAC =	4.000	BETAC =	.000
RUD-U =	15.000	RUD-L =	15.000
ELEVON =	5.000	AILRON =	.000
BETAO =	.000	PHI =	.000
DX =	.000	DY =	.000

RN/L = 3.35 GRADIENT INTERVAL = -1.00/ 4.00

ALPHAO = 10.000

DZ	CN-C	CA-C	CLM-C	CY-C	CBL-C	CYN-C	CL-C	CD-C	CSL-C	CLN-C
.000	.30636	.02401	-.13767	.03117	.00399	-.02070	.30093	.05797	.00181	-.02101
3.000	.31703	.02405	-.14652	.03348	.00408	-.02145	.31155	.05907	.00183	-.02176
7.500	.33271	.02373	-.16328	.03583	.00429	-.02251	.32719	.06030	.00193	-.02284
15.000	.35151	.02285	-.17581	.03766	.00431	-.02332	.34599	.06130	.00187	-.02364
30.000	.37959	.02070	-.19036	.03928	.00418	-.02386	.37416	.06182	.00170	-.02417
45.000	.39614	.01894	-.19931	.04081	.00438	-.02459	.39082	.06177	.00182	-.02491
60.000	.41493	.01707	-.20922	.04229	.00451	-.02523	.40972	.06173	.00189	-.02556
GRADIENT	.00356	.00001	-.00295	.00077	.00003	-.00025	.00354	.00037	.00000	-.00025

CA20 747/1 01 S1 CARRIER DATA (SGN14S) (26 NOV 75)

REFERENCE DATA

SREF =	5500.0000 SQ.FT.	XMRP =	1339.9000 IN.XC		
LREF =	327.7800 IN.	YMRP =	.0000 IN.YC		
BREF =	2348.0400 IN.	ZMRP =	190.8000 IN.ZC		
SCALE =	.0300				

PARAMETRIC DATA

ALPHAC =	4.000	BETAC =	.000
ELV-IB =	.000	ELV-OB =	3.000
ELEVON =	.000	MACH =	.600
BETAO =	.000	PHI =	.000
DX =	.000	DY =	.000

RN/L = 3.37 GRADIENT INTERVAL = .00/ 12.00

ALPHAO = 10.000

DZ	CN-C	CA-C	CLM-C	CY-C	CBL-C	CYN-C	CL-C	CD-C	CSL-C	CLN-C
.000	.32707	.02143	-.17010	-.00719	-.00006	.00134	.32179	.05752	.00002	.00133
3.000	.33371	.02107	-.17315	-.00734	-.00021	.00163	.32844	.05781	-.00010	.00163
7.500	.34604	.02038	-.18602	-.00812	-.00046	.00217	.34079	.05834	-.00029	.00219
15.000	.36502	.01869	-.20082	-.00860	-.00071	.00292	.35985	.05854	-.00046	.00297
30.000	.38797	.01633	-.21411	-.00899	-.00100	.00311	.38294	.05845	-.00073	.00319
45.000	.40430	.01424	-.21831	-.00873	-.00109	.00299	.39940	.05799	-.00083	.00307
60.000	.42180	.01215	-.22429	-.00869	-.00124	.00292	.41703	.05765	-.00099	.00302
GRADIENT	.00255	-.00014	-.00218	-.00013	-.00005	.00011	.00255	.00011	-.00004	.00012

RN/L = 3.36 GRADIENT INTERVAL = .00/ 12.00

ALPHAO = 14.000

DZ	CN-C	CA-C	CLM-C	CY-C	CBL-C	CYN-C	CL-C	CD-C	CSL-C	CLN-C
.000	.24212	.01851	-.05169	-.00729	.00005	.00101	.23753	.04615	.00010	.00099
3.000	.25046	.01907	-.05116	-.00802	-.00021	.00172	.24578	.04754	-.00009	.00173
7.500	.27202	.02055	-.08461	-.00779	-.00035	.00185	.26708	.05117	-.00021	.00187
15.000	.30360	.02042	-.12762	-.00782	-.00049	.00211	.29854	.05418	-.00032	.00214
30.000	.34643	.01837	-.16994	-.00924	-.00098	.00320	.34138	.05639	-.00070	.00327
45.000	.37287	.01618	-.19071	-.00880	-.00090	.00303	.36791	.05683	-.00064	.00310
60.000	.39929	.01398	-.21153	-.00836	-.00082	.00285	.39444	.05726	-.00058	.00291
GRADIENT	.00405	.00028	-.00463	-.00006	-.00005	.00011	.00400	.00068	-.00004	.00011

ORIGINAL PAGE IS OF POOR QUALITY

CA20 747/1 01 S1 CARRIER DATA (SGN146) (26 NOV 75)

REFERENCE DATA

SREF =	5500.0000 SQ.FT.	XMRP =	1339.9000 IN.XC
LREF =	327.7800 IN.	YMRP =	.0000 IN.YC
BREF =	2348.0400 IN.	ZMRP =	190.8000 IN.ZC
SCALE =	.0300		

PARAMETRIC DATA

ALPHAC =	4.000	BETAC =	.000
ELV-IB =	.000	ELV-OB =	3.000
ELEVON =	10.000	MACH =	.600
BETAO =	.000	PHI =	.000
DX =	.000	DY =	.000

RN/L = 3.33 GRADIENT INTERVAL = .00/ 12.00

ALPHAO = 10.000

DZ	CN-C	CA-C	CLM-C	CY-C	CBL-C	CYN-C	CL-C	CD-C	CSL-C	CLN-C
.000	.28476	.01636	-.03217	-.00913	-.00055	.00181	.28022	.04819	-.00041	.00164
3.000	.29082	.01652	-.04115	-.00941	-.00070	.00228	.28623	.04895	-.00051	.00233
7.500	.30484	.01713	-.06583	-.00982	-.00093	.00290	.30013	.05094	-.00068	.00298
15.000	.33087	.01749	-.11880	-.00959	-.00100	.00298	.32600	.05387	-.00074	.00306
30.000	.36366	.01598	-.16031	-.00931	-.00131	.00308	.35880	.05560	-.00104	.00319
45.000	.38537	.01471	-.18593	-.00911	-.00116	.00307	.38054	.05647	-.00090	.00316
60.000	.40848	.01330	-.21197	-.00897	-.00112	.00311	.40368	.05732	-.00085	.00320
GRADIENT	.00271	.00011	-.00457	-.00009	-.00005	.00015	.00269	.00037	-.00004	.00015

RN/L = 3.27 GRADIENT INTERVAL = .00/ 12.00

ALPHAO = 14.000

DZ	CN-C	CA-C	CLM-C	CY-C	CBL-C	CYN-C	CL-C	CD-C	CSL-C	CLN-C
.000	.20103	.01218	.08269	-.00761	-.00000	.00088	.19730	.03567	.00003	.00087
3.000	.20977	.01374	.06297	-.00784	-.00031	.00131	.20584	.03810	-.00023	.00133
7.500	.22608	.01461	.03177	-.00897	-.00052	.00208	.22199	.04059	-.00036	.00211
15.000	.26239	.01795	-.02920	-.00927	-.00083	.00260	.25779	.04754	-.00061	.00266
30.000	.31534	.01790	-.10817	-.00988	-.00113	.00327	.31050	.05274	-.00084	.00336
45.000	.34949	.01639	-.15070	-.00954	-.00102	.00329	.34465	.05461	-.00074	.00337
60.000	.38356	.01454	-.19259	-.00915	-.00093	.00329	.37872	.05652	-.00064	.00336
GRADIENT	.00336	.00031	-.00680	-.00019	-.00007	.00016	.00331	.00065	-.00005	.00017

CA20 747/1 01 S1 CARRIER DATA (SGN147) (26 NOV 75)

REFERENCE DATA

SREF =	5500.0000 SQ.FT.	XMRP =	1339.9000	IN.XC	
LREF =	327.7800 IN.	YMRP =	.0000	IN.YC	
BREF =	2348.0400 IN.	ZMRP =	190.8000	IN.ZC	
SCALE =	.0300				

PARAMETRIC DATA

ALPHAC =	4.000	BETAC =	.000
ELV-IB =	.000	ELV-OB =	3.000
ELEVON =	10.000	MACH =	.300
BETAO =	.000	PHI =	.000
DX =	.000	DY =	.000

RN/L = 1.89 GRADIENT INTERVAL = .00/ 12.00

ALPHAO = 10.000

DZ	CN-C	CA-C	CLM-C	CY-C	CBL-C	CYN-C	CL-C	CD-C	CSL-C	CLN-C
.000	.25589	.01121	-.06403	-.01246	-.00033	.00193	.25202	.04014	-.00019	.00194
3.000	.26145	.01163	-.07544	-.01279	-.00059	.00256	.25751	.04110	-.00038	.00260
7.500	.27526	.01218	-.10664	-.01297	-.00088	.00332	.27120	.04303	-.00059	.00338
15.000	.29747	.01258	-.15415	-.01305	-.00094	.00373	.29327	.04562	-.00061	.00380
30.000	.32471	.01199	-.19409	-.01360	-.00120	.00394	.32044	.04773	-.00065	.00404
45.000	.34475	.01068	-.22154	-.01396	-.00140	.00413	.34052	.04840	-.00103	.00424
60.000	.36599	.00953	-.24952	-.01440	-.00164	.00429	.36178	.04934	-.00125	.00443
GRADIENT	.00262	.00013	-.00578	-.00007	-.00007	.00018	.00260	.00039	-.00005	.00019

CA20 747/1 01 S1 CARRIER DATA (SGN148) (26 NOV 75)

REFERENCE DATA

SREF =	5500.0000 SQ.FT.	XMRP =	1339.9000	IN.XC	
LREF =	327.7800 IN.	YMRP =	.0000	IN.YC	
BREF =	2348.0400 IN.	ZMRP =	190.8000	IN.ZC	
SCALE =	.0300				

PARAMETRIC DATA

ALPHAC =	4.000	BETAC =	.000
ELV-IB =	.000	ELV-OB =	3.000
ELEVON =	10.000	MACH =	.700
BETAO =	.000	PHI =	.000
DX =	.000	DY =	.000

RN/L = 3.54 GRADIENT INTERVAL = .00/ 12.00

ALPHAO = 10.000

DZ	CN-C	CA-C	CLM-C	CY-C	CBL-C	CYN-C	CL-C	CD-C	CSL-C	CLN-C
.000	.28703	.01912	.02294	-.00597	-.00013	.00091	.28228	.05019	-.00008	.00091
3.000	.29489	.01876	.01050	-.00604	-.00036	.00135	.29005	.05161	-.00027	.00137
7.500	.31177	.01955	-.01579	-.00670	-.00048	.00195	.30678	.05405	-.00033	.00199
15.000	.34225	.02006	-.07292	-.00660	-.00071	.00216	.33707	.05758	-.00054	.00221
30.000	.38017	.01923	-.12168	-.00592	-.00077	.00216	.37489	.06049	-.00060	.00222
45.000	.40508	.01793	-.14711	-.00718	-.00082	.00259	.39984	.06160	-.00060	.00266
60.000	.43127	.01665	-.17362	-.00808	-.00085	.00295	.42604	.06266	-.00060	.00301
GRADIENT	.00334	.00019	-.00522	-.00010	-.00035	.00014	.00330	.00052	-.00003	.00014

CA20 747/1 01 S1 CARRIER DATA (SGN149) (26 NOV 75)

REFERENCE DATA

SREF = 5500.0000 SQ.FT. XMRP = 1339.9000 IN.XC
LREF = 327.7800 IN. YMRP = .0000 IN.YC
BREF = 2348.0400 IN. ZMRP = 190.8000 IN.ZC
SCALE = .0300

PARAMETRIC DATA

ALPHAC =	4.000	BETAC =	.000
RUD-U =	.000	RUD-L =	.000
ELEVON =	5.000	AILRON =	-10.000
BETAO =	.000	PHI =	.000
DX =	.000	DY =	.000

RN/L = 3.34 GRADIENT INTERVAL = .00/ 12.00

ALPHAO = 10.000

DZ	CN-C	CA-C	CLM-C	CY-C	CBL-C	CYN-C	CL-C	CD-C	CSL-C	CLN-C
.000	.30533	.01658	-.08809	-.01713	.00425	.00027	.30063	.05061	.00421	-.00017
3.000	.31330	.01660	-.09956	-.01750	.00352	.00112	.30856	.05143	.00357	.00075
7.500	.32758	.01604	-.12002	-.02125	.00247	.00375	.32283	.05229	.00279	.00348
15.000	.34951	.01620	-.15648	-.03183	-.00031	.01118	.34465	.05460	.00078	.01115
30.000	.37811	.01451	-.18699	-.03151	-.00244	.01331	.37329	.05575	-.00113	.01348
45.000	.39700	.01422	-.20099	-.01787	-.00165	.00722	.39213	.05732	-.00096	.00734
60.000	.41773	.01348	-.21714	-.00656	-.00143	.00057	.41284	.05861	-.00121	.00270
GRADIENT	.00298	-.00008	-.00428	-.00057	-.00024	.00047	.00298	.00022	-.00019	.00050

RN/L = 3.29 GRADIENT INTERVAL = .00/ 12.00

ALPHAO = 14.000

DZ	CN-C	CA-C	CLM-C	CY-C	CBL-C	CYN-C	CL-C	CD-C	CSL-C	CLN-C
.000	.23023	.01564	-.00085	-.00906	.00502	-.00478	.22598	.04217	.00445	-.00528
3.000	.23529	.01565	.00437	-.01176	.00471	-.00283	.23101	.04267	.00434	-.00331
7.500	.25494	.01679	-.03066	-.01587	.00370	.00015	.25045	.04579	.00365	-.00024
15.000	.28598	.01714	-.07705	-.02364	.00211	.00589	.28132	.04921	.00265	.00593
30.000	.33336	.01636	-.13963	-.03301	-.00141	.01334	.32856	.05318	-.00009	.01341
45.000	.36367	.01538	-.17118	-.02509	-.00194	.01056	.35883	.05519	-.00091	.01069
60.000	.39421	.01435	-.20293	-.01746	-.00255	.00795	.38933	.05715	-.00178	.00816
GRADIENT	.00339	.00016	-.00428	-.00091	-.00018	.00066	.00335	.00050	-.00011	.00067

BTWT-1431CA5 STRUT T+I CORR K1+F0 H15.1A V9.1 C (6GMDA4) (02 MAY 75)

REFERENCE DATA

SREF = 5500.0000 SQ.FT. XMRP = 1339.9000 IN. XC
LREF = 327.7800 IN. YMRP = .0000 IN. YC
BREF = 2348.0400 IN. ZMRP = 190.8000 IN. ZC
SCALE = .0300

PARAMETRIC DATA

STAB =	-2.000	RUD-U =	.000
RUD-L =	.000	ELV-IB =	.000
ELV-OB =	3.000	SI-12 =	.000
DZ =	.000	ALPHAD =	6.000
MACH =	.600		

RN/L = 3.18 GRADIENT INTERVAL = -5.00/ 5.00

ALPHAW = 2.000 BETA	CL	CD	CLM	CY	CLN	CSL	CA	CN	CBL	CYN
-5.000	.11186	.04683	.14829	.01716	-.00543	.00347	.04691	.11183	.00348	-.00543
GRADIENT	.00000	.00000	.00000	.00000	.00000	.00000	.00000	.00000	.00000	.00000

RN/L = 3.15 GRADIENT INTERVAL = -5.00/ 5.00

ALPHAW = 4.000 BETA	CL	CD	CLM	CY	CLN	CSL	CA	CN	CBL	CYN
-5.000	.09744	.04473	.14796	.01742	-.00504	.00328	.04145	.09887	.00346	-.00495
GRADIENT	.00000	.00000	.00000	.00000	.00000	.00000	.00000	.00000	.00000	.00000

RN/L = 3.13 GRADIENT INTERVAL = -5.00/ 5.00

ALPHAW = 6.000 BETA	CL	CD	CLM	CY	CLN	CSL	CA	CN	CBL	CYN
-5.000	.08478	.04273	.14989	.01710	-.00439	.00306	.03668	.08753	.00335	-.00418
GRADIENT	.00000	.00000	.00000	.00000	.00000	.00000	.00000	.00000	.00000	.00000

RN/L = 3.13 GRADIENT INTERVAL = -5.00/ 5.00

ALPHAW = 8.000 BETA	CL	CD	CLM	CY	CLN	CSL	CA	CN	CBL	CYN
-5.000	.07435	.04082	.15465	.01607	-.00342	.00279	.03280	.07826	.00314	-.00300
GRADIENT	.00000	.00000	.00000	.00000	.00000	.00000	.00000	.00000	.00000	.00000

RN/L = 3.12 GRADIENT INTERVAL = -5.00/ 5.00

ALPHAW = 10.000 BETA	CL	CD	CLM	CY	CLN	CSL	CA	CN	CBL	CYN
-5.000	.06320	.03888	.15851	.01526	-.00254	.00253	.02863	.05933	.00296	-.00195
GRADIENT	.00000	.00000	.00000	.00000	.00000	.00000	.00000	.00000	.00000	.00000

RN/L = 3.08 GRADIENT INTERVAL = -5.00/ 5.00

ALPHAW = 12.000 BETA	CL	CD	CLM	CY	CLN	CSL	CA	CN	CBL	CYN
-5.000	.04781	.03675	.15694	.01583	-.00229	.00236	.02278	.05446	.00298	-.00165
GRADIENT	.00000	.00000	.00000	.00000	.00000	.00000	.00000	.00000	.00000	.00000

BTWT-1431CA5 STRUT T+I CORR K1+F0 H15.1A V9.1 C (6GM0B4) (02 MAY 75)

REFERENCE DATA

SREF = 5500.0000 SQ.FT. XMRP = 1339.9000 IN. XC
LREF = 327.7800 IN. YMRP = .0000 IN. YC
BREF = 2348.0400 IN. ZMRP = 190.8000 IN. ZC
SCALE = .0300

PARAMETRIC DATA

BETA = .000 STAB = -2.000
RUD-U = .000 RUD-L = .000
ELV-IB = .000 ELV-OB = 3.000
DZ = .000 ALPHAO = 6.000
MACH = .600

RN/L = .00 GRADIENT INTERVAL = -5.00/ 5.00

ALPHAW = 2.000

BETA	CL	CD	CLM	CY	CLN	CSL	CA	CN	CBL	CYN
.000	.11440	.04720	.15180	-.00080	-.00070	.00050	.04720	.11440	.00050	-.00070
GRADIENT	.00000	.00000	.00000	.00000	.00000	.00000	.00000	.00000	.00000	.00000

RN/L = .00 GRADIENT INTERVAL = -5.00/ 5.00

ALPHAW = 4.000

BETA	CL	CD	CLM	CY	CLN	CSL	CA	CN	CBL	CYN
.000	.10170	.04560	.15210	-.00100	-.00080	.00020	.04200	.10330	.00020	-.00080
GRADIENT	.00000	.00000	.00000	.00000	.00000	.00000	.00000	.00000	.00000	.00000

RN/L = .00 GRADIENT INTERVAL = -5.00/ 5.00

ALPHAW = 6.000

BETA	CL	CD	CLM	CY	CLN	CSL	CA	CN	CBL	CYN
.000	.09200	.04300	.15240	-.00170	-.00050	.00010	.03650	.09480	.00010	-.00050
GRADIENT	.00000	.00000	.00000	.00000	.00000	.00000	.00000	.00000	.00000	.00000

RN/L = .00 GRADIENT INTERVAL = -5.00/ 5.00

ALPHAW = 8.000

BETA	CL	CD	CLM	CY	CLN	CSL	CA	CN	CBL	CYN
.000	.07490	.04170	.15920	-.00180	-.00050	-.00020	.03370	.07880	-.00020	-.00050
GRADIENT	.00000	.00000	.00000	.00000	.00000	.00000	.00000	.00000	.00000	.00000

RN/L = .00 GRADIENT INTERVAL = -5.00/ 5.00

ALPHAW = 10.000

BETA	CL	CD	CLM	CY	CLN	CSL	CA	CN	CBL	CYN
.000	.05650	.04570	.17400	-.00120	-.00060	-.00010	.03740	.06230	-.00010	-.00060
GRADIENT	.00000	.00000	.00000	.00000	.00000	.00000	.00000	.00000	.00000	.00000

RN/L = .00 GRADIENT INTERVAL = -5.00/ 5.00

ALPHAW = 12.000

BETA	CL	CD	CLM	CY	CLN	CSL	CA	CN	CBL	CYN
.000	.03700	.05330	.18400	.00010	-.00120	-.00030	.04610	.04570	-.00010	-.00120
GRADIENT	.00000	.00000	.00000	.00000	.00000	.00000	.00000	.00000	.00000	.00000

BTWT-1431CA5 STRUT T+I CORR K1+F0 H15.1A V9.1 C (6GMDC4) (02 MAY 75)

REFERENCE DATA

SREF = 5500.0000 SQ.FT. XMRP = 1339.9000 IN. XC
LREF = 327.7800 IN. YMRP = .0000 IN. YC
BREF = 2348.0400 IN. ZMRP = 190.8000 IN. ZC
SCALE = .0300

PARAMETRIC DATA

STAB = -2.000 RUD-U = .000
RUD-L = .000 ELV-IB = .000
ELV-OB = 3.000 S1-12 = .000
DZ = .000 ALPHAO = 6.000
MACH = .600

RN/L = 3.18 GRADIENT INTERVAL = -5.00/ 5.00

ALPHAW = 2.000	CL	CD	CLM	CY	CLN	CSL	CA	CN	CBL	CYN
BETA 5.000	.10825	.04689	.15130	-.01898	.00442	-.00282	.04696	.10817	-.00282	.00442
GRADIENT	.00000	.00000	.00000	.00000	.00000	.00000	.00000	.00000	.00000	.00000

RN/L = 3.15 GRADIENT INTERVAL = -5.00/ 5.00

ALPHAW = 4.000	CL	CD	CLM	CY	CLN	CSL	CA	CN	CBL	CYN
BETA 5.000	.09389	.04480	.14945	-.01910	.00453	-.00327	.04162	.09533	-.00340	.00446
GRADIENT	.00000	.00000	.00000	.00000	.00000	.00000	.00000	.00000	.00000	.00000

RN/L = 3.13 GRADIENT INTERVAL = -5.00/ 5.00

ALPHAW = 6.000	CL	CD	CLM	CY	CLN	CSL	CA	CN	CBL	CYN
BETA 5.000	.08237	.04295	.14860	-.01895	.00430	-.00359	.03702	.08516	-.00383	.00409
GRADIENT	.00000	.00000	.00000	.00000	.00000	.00000	.00000	.00000	.00000	.00000

RN/L = 3.13 GRADIENT INTERVAL = -5.00/ 5.00

ALPHAW = 8.000	CL	CD	CLM	CY	CLN	CSL	CA	CN	CBL	CYN
BETA 5.000	.07443	.04141	.14902	-.01845	.00366	-.00374	.03337	.07835	-.00408	.00322
GRADIENT	.00000	.00000	.00000	.00000	.00000	.00000	.00000	.00000	.00000	.00000

RN/L = 3.12 GRADIENT INTERVAL = -5.00/ 5.00

ALPHAW = 10.000	CL	CD	CLM	CY	CLN	CSL	CA	CN	CBL	CYN
BETA 5.000	.06533	.03977	.14903	-.01806	.00316	-.00395	.02941	.07046	-.00439	.00252
GRADIENT	.00000	.00000	.00000	.00000	.00000	.00000	.00000	.00000	.00000	.00000

RN/L = 3.08 GRADIENT INTERVAL = -5.00/ 5.00

ALPHAW = 12.000	CL	CD	CLM	CY	CLN	CSL	CA	CN	CBL	CYN
BETA 5.000	.04939	.03753	.14662	-.01834	.00344	-.00447	.02366	.05614	-.00505	.00277
GRADIENT	.00000	.00000	.00000	.00000	.00000	.00000	.00000	.00000	.00000	.00000